PE2061 and PE2061S

INSTRUCTION MANUAL

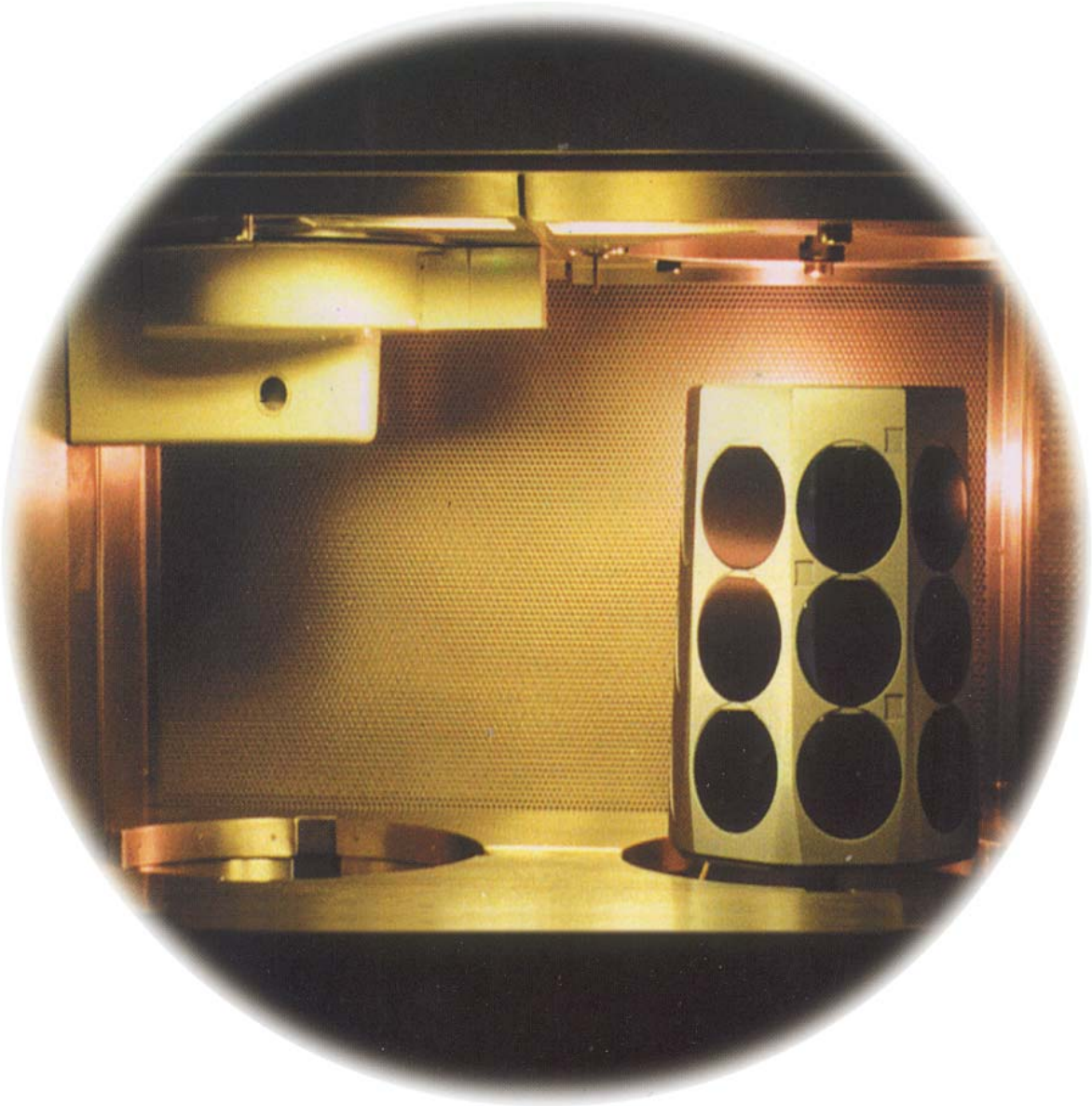

LPE S.p.A.

Powering the future

LPE s.p.a. - Via Falzarego, 8 - 20021 BOLLATE (MILAN) ITALY
Ph. ++39.02.3834151 - Fax ++39.02.38306118 - E-mail: info@lpe-epi.com

INSTRUCTION MANUAL

PE 2061 RELEASE # 11

Original version
ENGLISH

COPYRIGHT © 2002 **LPE EPITAXIAL TECHNOLOGY**
all rights reserved

No part of these Operating Instructions may be reproduced or used under any form or with any electronic or mechanical method including photocopying, recording with any other method, without the permission of the owner of the Copyright. The drawings are of exclusive ownership.

Vol.1

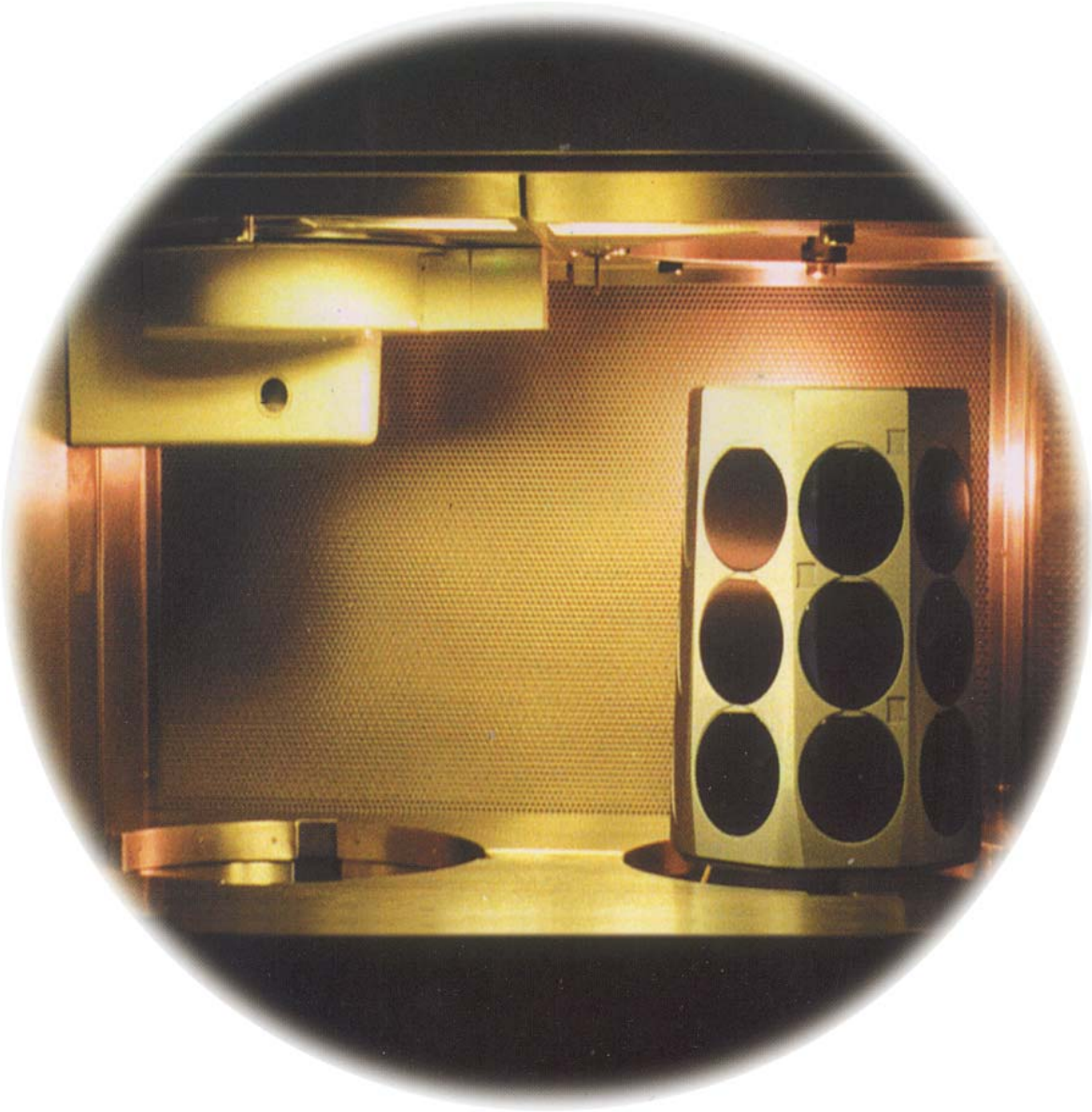

LPE S.p.A.

Powering the future

LPE s.p.a. - Via Falzarego, 8 - 20021 BOLLATE (MILAN) ITALY
Ph. ++39.02.3834151 - Fax ++39.02.38306118 - E-mail: info@lpe-epi.com

INSTRUCTION MANUAL

PE 2061 REL. #11 VOL.1

Chap. (1-20) General Disposal

Original version
ENGLISH

COPYRIGHT © 2002 **LPE EPITAXIAL TECHNOLOGY**
all rights reserved

No part of these Operating Instructions may be reproduced or used under any form or with any electronic or mechanical method including photocopying, recording with any other method, without the permission of the owner of the Copyright. The drawings are of exclusive ownership.

CHAPTER	PAGE
1 INTRODUCTION	**1-1**
• Definition of terms and symbols used in this manual	1-7
2 MACHINE IDENTIFICATION	**2-1**
3 DESCRIPTION OF MACHINE	**3-1**
• Technical characteristics	3-1
• Description of process	3-2
• Typical deposition work cycle	3-4
• Deposit removal cycle	3-4
4 FIELD OF APPLICATION	**4-1**
• Characteristics of silicon wafer	4-1
• Substratum dimension	4-1
5 PE2061S: WHAT'S NEW	**5-1**
• Power heat up during PRE H2 phase	5-1
• HCl line	5-3
6 GENERAL NOTES ON DELIVERY	**6-1**
*** 7 INSTALLATION SPECIFICATIONS**	**7-1**
• General Equipment Datasheet - ONLY FOR PE2061	7-2
• General Equipment Datasheet - ONLY FOR PE2061S	7-3
*** 8 TRANSPORT AND INSTALLATION *(THE FIRST INSTALLATION IS LPE'S RESPONSIBILITY)***	**8-1**
• Unpacking and installation sequence of lower and upper stations	8-3
• Installing the inductor coils (on 2 stations A and B)	8-10
• Condenser installation	8-14
• Installing caps on the 2 stations	8-15
• Tubing initial connection	8-16
• Electrical connections inside the reactor	8-19
• Locating the power generator	8-25
• Forming coaxial cables	8-26
Epireactor side	8-27
Epiconverter side- ONLY FOR PE2061	8-28
Epiconverter side- ONLY FOR PE2061S	8-30
• Serial line connection Generator-Reactor	8-32
• Serial line connection Workstation-Reactor	8-33
• Emergency line Generator-Reactor	8-33
• Line connections Workstation-Monitor	8-34
• Chlorosilane bubbler saturator (all models)	8-35
• Bubbler installation safety warning	8-35
• Light column	8-38
• Susceptor trolley (optional)	8-38
• Drawings reference guide	8-39
9 DANGER AREAS AND SAFETY DEVICES	**9-1**
• Electrocution danger	9-1
General electrical hazard	9-1
Power generator hazard	9-1
Induction coil hazard	9-2
Capacitor hazard	9-3
Lamps lighting the work area (230 V)	9-3
• Hot burns hazard	9-4
• Explosion hazard	9-5
• Shearing and entangling hazard	9-6
• Crushing and entangling hazard	9-7
• Tripping hazard	9-7
• Hazard caused by chemical substances	9-7
• Pricking or cuts hazard	9-7
• Falling hazard	9-8
• Gas panel hazard	9-8

- Other safety elements installed on machine 9-9
  - Emergency stops 9-9
  - Light column (optional) 9-9
  - Buzzer 9-9
  - Operating instructions 9-9
  - Emergency water (OPTIONAL) 9-10

* **10 POSITIONS OF WARNING LABELS 10-1**
- Introduction 10-1

11 SAFETY INSTRUCTIONS 11-1
- Introduction 11-1
- Definitions 11-1
- General safety 11-2
  - Reactor on power level “0” 11-2
- General precautions against electrical hazards 11-4
- General precautions against gas hazards 11-5
- Escape route in case of fire 11-6
- Protective devices for operator 11-6
- Noise level 11-7
- Number of recommended operators and safe positions 11-7
- Hot burns hazard 11-8
- Sequence of correct opening and closing of the upper door 11-9
- Safety devices - disabling 11-11
- Motor protection grade 11-13
- Environment conditions 11-14
- Hazards related to cleaning and maintenance 11-14
- Explosion hazard 11-15
- Bell Jar crash hazard 11-16
- Storage 11-16

12 LAY-OUT OF COMMANDS AND CONTROL EQUIPMENT 12-1
- Drawings reference guide 12-11

* **13 CONNECTIONS 13-1**
- Hydraulic 13-1
- Pneumatic connections and services 13-3
- Nitrogen 13-4
- Discharges (exhausted gases/air suction) 13-4
- Electrical 13-5
  - Reactor (internal connections) 13-5
  - Power generator 13-6
  - Power generator (coaxial cables) 13-7
  - Workstation 13-8
  - Monitor 13-8
- Gas 13-9
- Drawings reference guide 13-10

* **14 NOTE 14-1**

* **15 PRELIMINARY CHECK PROCEDURE (*AT FIRST START UP LPE’S RESPONSIBILITY)* 15-1**
- Introduction 15-1
- System Operation Check Procedure (example) 15-2
- System status for executing preliminary check procedures 15-3
- Procedure S1 and S2 (400/230V measured on connecting main switch A-32) 15-4
- Procedure S3 and S4 (24V P.C. digital input PC boards - 60V stepping motor drivers) 15-5
- Procedure S5 (+/- 15 MFC measured on MFC connector) 15-6
- Procedure S6 (220V Silicon Sources measured on source connector) 15-6
- Procedure C1 (Pressure switch A-B WARNING/ALARM) 15-8
  - Station A warning 15-8
  - Station A alarm 15-10
- Procedure C2 (Limit switches) 15-12
- Procedure C3 (H2 leak detector WARNING/ALARM 1/2) 15-13
- Procedure C4 (Laminar flow pressure switch) 15-17

- Procedure C5 (Exhaust air vacuum sw) 15-17
- Procedure C5 (Spoiler pressure sw) 15-18
- Procedure C5 (Cooling air pressure sw) 15-18
- Procedure C6 (Computer cooling air thermal sw) 15-18
- Procedure C6 (Thermal sw air) 15-19
- Procedure C7 (Shutter plate vacuum switch A and B) 15-19
- Procedure C8 (Pressure switch compressed air) 15-21
- Procedure T1 (Thermal sw shutter plate and bell-jar cap A/B - Induction coil A/B - Capacitors) 15-22
- Procedure T2 (Flow sw shutter plate and bell-jar cap A/B - Coil A/B - Capacitors) 15-23
- Procedure T3 (Limit switches A and B) 15-24
- Procedure T4 (Safety sw port A and B lift and quartz-guard photocell) 15-26
- Procedure T5 (Rotation foot switch A/B) 15-28
- Procedure T6 (Flow sw blower motor)) 15-29
- Procedure T7 (Door switch computer port) 15-30
- Procedure T8 (Bubbler 1/2 ALARM) 15-31
- Procedure T9 (Status scrubber) 15-31
- Procedure T10 (Limit switch B - spoiler to A / Limit switch A - spoiler to B) 15-32
- Procedure T11 (Bubbler 1 level - Bubbler 2 level) 15-33
- Procedure T12 (Front shield closed) 15-33
- Procedure T13 (Panels, doors and pressure relief panels microswitch) 15-35
- Drawings reference guide 15-36

* **16 QUARTZ ELEMENTS (*AT FIRST START UP LPE'S RESPONSIBILITY*)** **16-1**
- Quartz plate 16-1
- Quartz tubes for cap and bell-jar 16-3
- Quartz elements and shutter plate 16-9
- Use the susceptor trolley (optional) 16-12

* **17 PRELIMINARY AND START-UP JOBS (*AT FIRST START UP LPE'S RESPONSIBILITY*)** **17-1**
- Introduction 17-1
- Pressure switch setting 17-2
- Gas panel test 17-5
- Flowmeter tests 17-12
- Bubbler purging and filling 17-14
- Doping lines conditioning (HCl and dopes) 17-15
- Generator setting 17-16
  - ONLY FOR PE2061 17-16
  - ONLY FOR PE2061S 17-19
- Temperature setting 17-22
- Silicon wafer loading 17-22
- Starting initial production 17-23

18 TEMPERATURE CALIBRATION (*AT FIRST START UP LPE'S RESPONSIBILITY*) **18-1**
- Introduction 18-1
  - To check lens focusing 18-1
  - Modifying temperature calibration 18-1

19 GENERAL INFORMATION ON PROCESS TUNING **19-1**
- Temperature profile 19-1
- Process start-up 19-2
- Process start-up according to wafer diameter and thickness 19-2
- Resistivity tuning 19-3
  - Approx. initial setting 19-3
  - Adjust or changing resistivity target 19-3
  - PPB formula 19-3
- Resistivity profile tuning 19-4
  - Type N (PH3) phosphine 19-4
  - Type P (B2H6) diborane 19-5
- Thickness tuning 19-5
  - H2M 19-5
  - Rotation 19-7
  - Gas delivery in bell-jar tube height 19-8

* **20 SHUT-DOWNS AND RELEVANT START-UPS**	**20-1**
• Shut-downs	20-1
Limited period shut-down	20-2
Medium period shut-down	20-4
Definitive shut-down for disassembly or transfer	20-7
Shut-down by pressing the emergency stop button	20-9
• Start-up	20-10
After limited period shut-down	20-10
After a medium period shut-down	20-12
After emergency stop button was pressed	20-12

THE OPERATIONS DESCRIBED IN CHAPTER 8 (FROM PAGE 8-4) AND IN CHAPTERS 15 - 16 - 17 - 18 ARE *FOR THE FIRST INSTALLATION AND START-UP* LPE'S RESPONSIBILITY AND HAS TO BE CARRIED OUT BY PERSONNEL APPOINTED BY THE CUSTOMER.

*** The items marked with this symbol are reserved solely for specialized personnel and are NOT addressed to the machine operator.**

Specialized personnel is taken to mean those persons who, due to their training, experience and education besides knowledge of the relevant rules, regulations, measures for accident prevention and concerning conditions of service, have been authorized by the person in charge of plant safety to carry out any necessary activity and in this be able to recognize and avoid all possible danger (definition for technical personnel, see VDE 0105 or IEC 364 standards).

⚠ **NOTE:** the present Manual concerns the Epitaxial Reactor mod. PE2061 and mod. PE2061S, therefore all instructions and information apply to both models, except where specified with the following warning note:

ONLY FOR PE .....

This machine has been built in conformity with the following European Directives:

Directeves	Standards
Machine Directive 98/37/EEC	**EN 292-1 / EN 292-2/ EN 481**
EMC Directive 89/336/EEC	**EN 50081-2 / EN 50082-2**
73/23/EEC Low voltage	**EN 60204**

The machine presents no hazards for the operator if used according to the instructions provided by LPE and provided that the safety devices are constantly kept efficient.

The purpose of this sheet is to certify that on shipping the machine, the devices were efficient and that the operating instructions have been sent with the machine.

The Operating Instructions contain all the information on the life cycle of the machine from delivery to disposal and all the SAFETY REGULATIONS that need to be adopted so as to permit simple, hazard-free use for the operator.

The Operating Instructions, provided with a subject INDEX, address two different types of operator: SPECIALIZED OPERATORS (carriers, installers, maintenance technicians, etc.) and MACHINE OPERATORS proper.

The Customer is responsible for checking that the operators read and follow the Operating Instructions step by step.

Each area of competence is marked by a symbol repeated in the heading of each page. The following symbols identify the type of operator assigned to carrying out the specified duties and are repeated from time to time in the chapters of the manual.

Specialized carriers		Maintenance personnel	
Installers		Shift-supervisor	
Machine operator		Engineer / Department Responsible	

The **safety regulations** are all preceded by the symbol ⚠.

The data given in these Operating Instructions are not however binding and refer only to the machine at issue and to the current state of the art.

They are to be considered an integral part of the machine and must be conserved for future reference throughout the life of the machine.

The technical information could be changed without notice.

Note that no part of these Operating Instructions may be reproduced or copied in any form, prior to written permission from LPE who reserve all rights.

Enclosed inside the Instruction Manual, you will also receive the converter switch keys, that are a safety item, joined with a label, plus a spare keys of all locks of the system.

⚠ CAUTION

THE OPERATIONS DESCRIBED IN CHAPTER 8 (FROM PAGE 8-4) AND IN CHAPTERS 14 - 15 - 16 - 17 ARE *FOR THE FIRST INSTALLATION AND START -UP* LPE'S RESPONSIBILITY AND HAS TO BE CARRIED OUT BY THE PERSONNEL APPOINTED BY THE CUSTOMER.

The two following pages include an example of a Letter on Delivery which purpose is to certify the delivery of the machine, of all the technical documentation enclosed, Declaration of Conformity and Test Certifications

.

EXAMPLE

***Letter on delivery** to:*

Epitaxial Reactor s/n : .....

Date of delivery : .....

Customer P.O. : .....

Customer name

Dear Customer,

this machine has been built in conformity with the following European Directives:

Directives	Standards
Machine Directive 98/37/EEC	**EN 292-1 / EN 292-2 / EN 481**
EMC Directive 89/336/EEC	**EN 50081-2 / EN 50082-2**
Low Voltage Directive 73/23/EEC	**EN 60204**

therefore the machine presents no hazard for the operator if used according to the instructions provided by LPE and provided that the safety devices are constantly kept efficient.

The Operating Instructions (you can find it into appropriate box) contain all the information on the life cycle of the machine from delivery to disposal and all the safety regulations that need to be adopted so as to permit simple, hazard-free use for the operator.

The Customer is responsible for checking that the operators read and follow the Operating Instructions step by step.

Into the chapter 1, you can find the definitions of terms and symbols used to identify the different types of operator, to whom are addressed all Manual chapter.

Inside the Instruction Manual, you will also find the system switch keys (that are a safety item) joined with a label.

Purpose of this sheet, is certify the delivery of the machine and all the documentation enclosed, therefore we ask the Customer to return countersigned the copy of this letter, as preliminary acceptance of the delivery.

Enclosed to the attachment Installation Specifications, there is also the Facilities Check List. We remember you to compile it, after the completion of the facilities hook-up. Received the Check List duly filled, LPE will send the Engineer for Reactor start-up operations.

Inside to Reactor, into the appropriate envelopment (inside the electronic cabinet), there is the System Operation Check Procedure.

The System Operation Check Procedure encloses the functional and quality controls that are carried out by LPE Technical Team, during the machine mechanical/electrical assembly and the factory final test.

Some tests and calibrations are carried out in LPE factory and are repeated beside the Customer; some other tests are carried out only at Customer site.

Yet not mandatory, the presence of apposite Customer representative is highly recommended.

EXAMPLE

***Letter on delivery** to:*

Customer name

Epitaxial Reactor s/n : .....

Date of delivery : .....

Customer P.O. : .....

A. Reference item delivered:

Type :	Model :	s/n :
Reactor	PE2061	.....
Epiconverter	LF150-IFC 150/2	.....
Work station	SUN	.....
Bubbler 1	.....	.....
Bubbler 2	.....	.....
Scrubber	.....	.....

B. Documentation list:

1. 1 set of Reactor Manual release #.... on paper, so composed:
   - volume 1 (installation, start-up, temperature calibration, etc.) = chapters 1÷-20
   - volume 2 (operation manual, etc.) = chapters 21÷-23
   - volume 3 A/B (maintenance, disposal, drawings, enclosures) = chapters 24÷-27
   - volume 4 (optional)
2. 1 copy of the Installation Specifications already supplied
3. 1 copy of the technical extract of the Installation Specification (attached to Reactor)
4. 1 set of …*(accessories manual)* … on paper
5. 2 copies of System Operation Check Procedure (attached to Reactor, into the appropriate envelope - please, return a countersigned copy)
6. Declaration of Conformity (EEC Directives) for:
   - Epireactor s/n ..../.... and Epiconverter s/n .....
   - Scrubber s/n ....
7. Test Certification for:
   - Bubbler 1 s/n ....
   - Bubbler 2 s/n ....
8. 1 set of keys, so composed:
   - converter switch key (3 pieces)
   - spare keys (gas metering / electronics rack / epiconverter door / epiconverter switch)

Date : MM GG , AA

Quality Assurance

- **Definition of terms and symbols used in this manual**

Machine operator

A person accredited for running and adjusting the system. This person MUST have read and understood the relevant operating instructions in all their parts so as to be aware of the hazards and procedures concerning use of the machine.

The operator is obliged to signal defects and trouble with the system to his or her superior and must take no initiative to resolve them.

This person must meticulously keep to the behavior foreseen in the following instructions.

The operator has access to the machine with no need for passwords for the operations allowed for the machine and by the shift-supervisor.

Specialized personnel

Personnel with a higher level of education and theoretical-practical preparation than that of the operator. This person must have read and understood the operating instructions in all their parts and must be able to understand the wiring, pneumatic and hydraulic diagrams of the machine so as to be able to carry out maintenance operations competently and safely.

This personnel accesses the maintenance menu by means of a specific password (PASSWORD 1) for the maintenance and diagnostics operations.

Shift-supervisor

A person with the task of supervising the correct use and operation of the machine, checking that all the safety devices are efficient.

In addition, he or she has the task of checking that maintenance is performed correctly, using the measures and means indicated in the manual.

This person can access the RECIPE EDITOR by means of a specific password (PASSWORD 2) and can operate without any limit.

Engineer

Personnel with the task of establishing the machine's operating parameters in order to obtain a product in accordance with the user's needs. He or she must have read and understood the software manual.

This personnel can, by means of a specific password (PASSWORD 3), access all the parts of the software except for the parts concerning the configuration of the reactor.

⚠ **CAUTION:**

This highlights incorrect action or behavior that can give rise to hazardous action. In addition it indicates the remaining hazards there may be during maintenance operations.

WARNING

This highlights a procedure to be followed or avoided to correctly make an adjustment or replace a part.

Note:

This is used to further clarify an instruction or an adjustment that permits better exploiting the machine or an instrument mounted on it.

Frame

This highlights a **CAUTION, WARNING or NOTE.**

In all communication with the manufacturer**, LPE Epitaxial Technology**, always quote the serial number and model of the machine (PE2061 or PE2061S).

The relevant data are given on the nameplate.

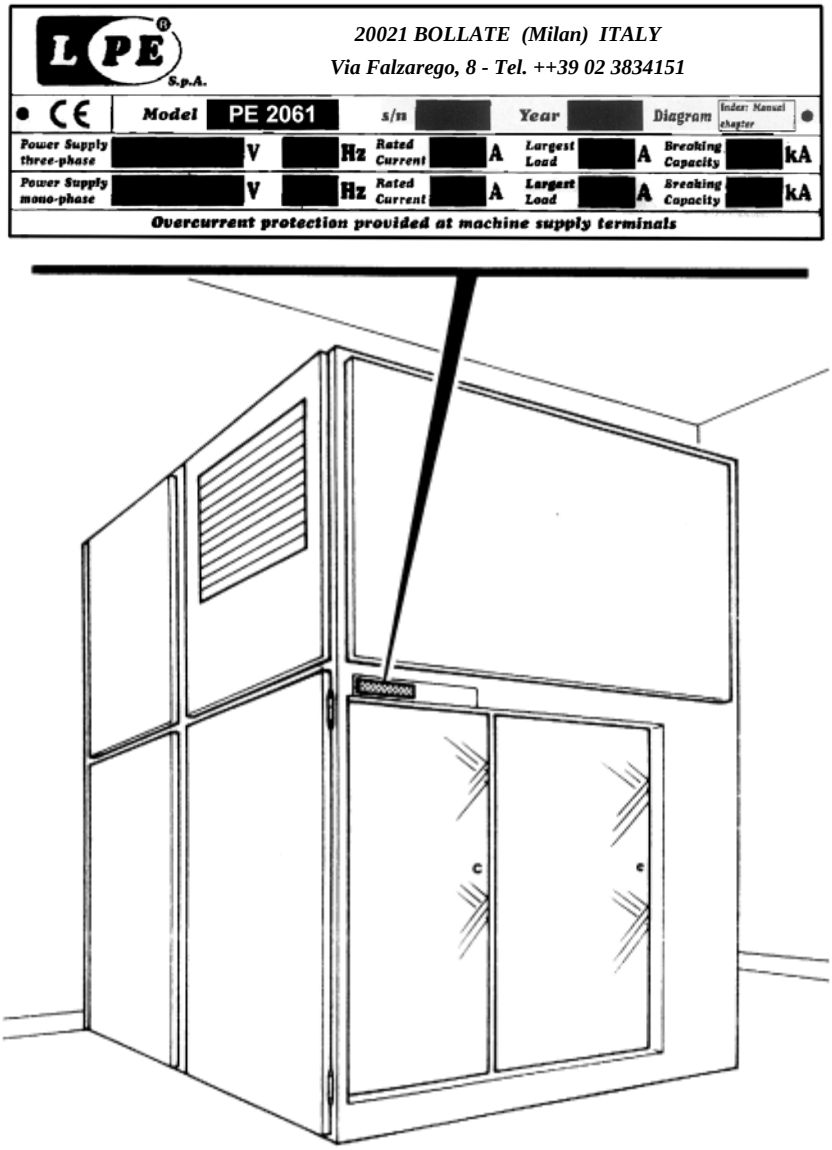

Technical characteristics

Machine parts:

1. **Epireactor (W x D x H)**
   Indicative dimensions: 1,800 x 1,725 x 2,735 mm
   (70,78" x 67,91" x 107,68")
   Approx. weight: 2,100 kg (4630 lb)
2. **Epiconverter**
   Indicative dimensions: 1,860 x 750 x 1,790 mm
   (73,23" x 29,53" x 70,47")
   Approx. weight: 1,100 kg (2425 lb)
3. **Epi Control panels** (with operator-machine interface
   CPU:
   Indicative dimensions: 206 x 620 x 440 mm
   (8,11" x 23,70 x 17,32")
   Approx. weight: 28 Kg (61 lb)
   MONITOR:
   Indicative dimensions: 397.3 x 240 x 439.5 mm
   (15,64" x 10,31" x 18,15")
   Approx. weight: 6.5Kg (14 lb)
4. **UPS for UE (230V)**
   Indicative dimensions: 196 x 546 x 432 mm
   (7,56" x 9.44" x 17,00")
   Approx. weight: 50 Kg (110 lb)
   UPS for US (115V)
   Indicative dimensions: 196 x 546 x 432 mm
   (7,72" x 21,50" x 17,00")
   Approx. weight: 50 Kg 110 lb)
5. **BUBBLER (cabinet)**
   Indicative dimensions: 300 x 300 x 1,500 mm
   (11,81" x 11,81" x 59,06")
   Approx. weight: up to 35 Kg (77lb),depending to model

LOADING CAPACITY PER CHAMBER (16° bell-jar)	
30 wafers	100 mm (4")
24 wafers	125 mm (5")
14 wafers	150 mm (6")
5 wafers	200 mm (8")
ATMOSPHERIC AND LOW PRESSURE DEPOSITION CAPABILITY	

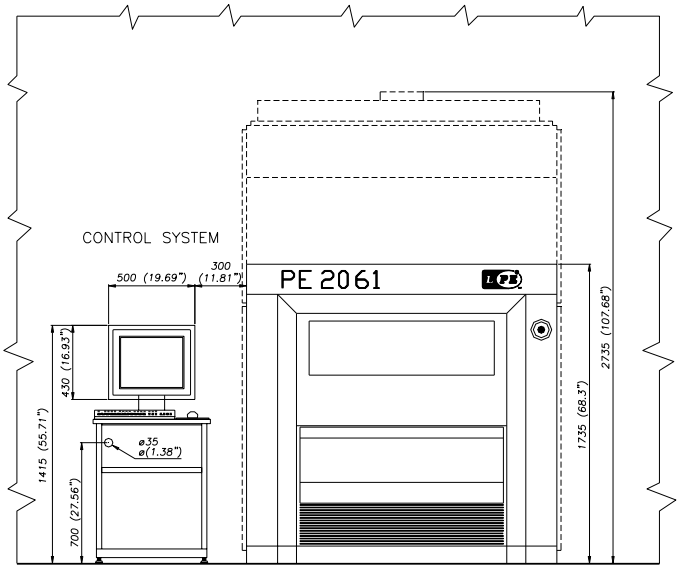

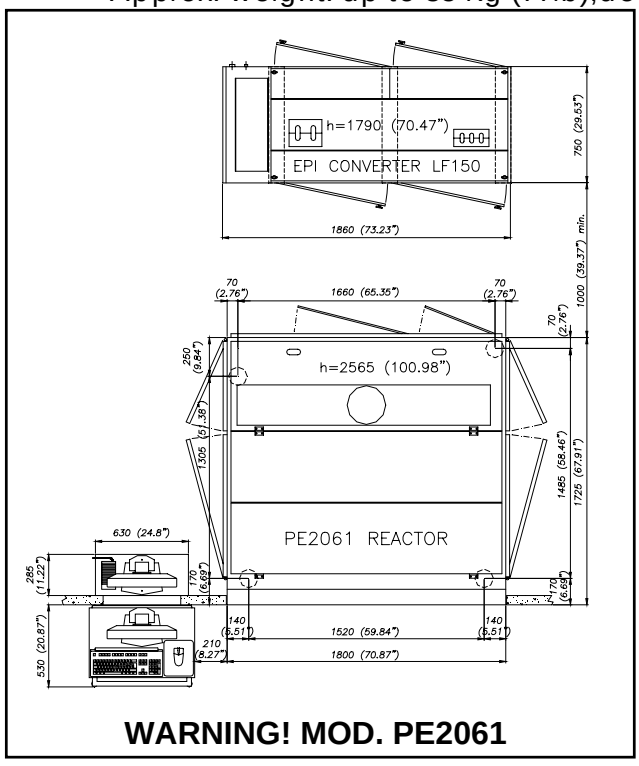

WARNING! MOD. PE2061

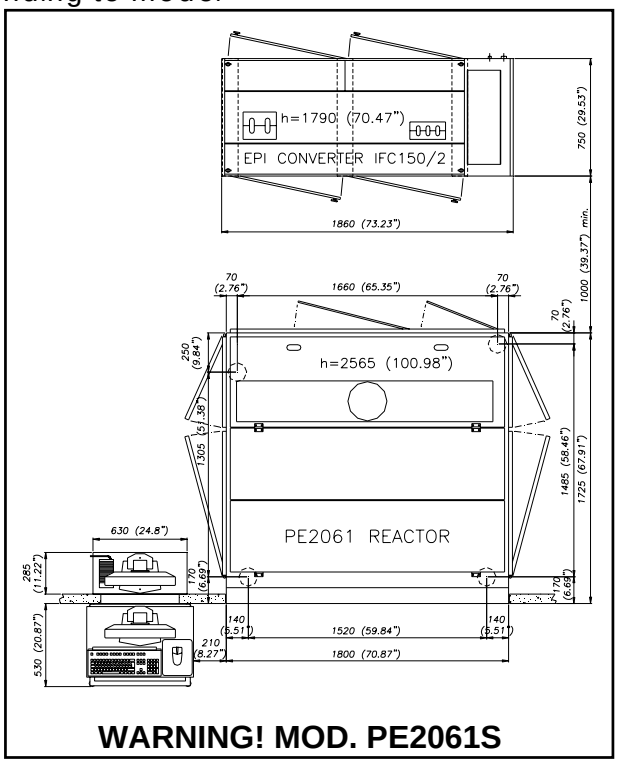

WARNING! MOD. PE2061S

Description of process

INTENDED USE

The model PE 2061 epitaxial reactor is a system whereby silicon obtained from chemical vapor is deposited (CVD =Chemical vapor deposition) on silicon substrates (wafers) according to the following known chemical reaction (or to chemical reactions using compounds similar to silicon) :

$SiCl_4 + 2H_2 = Si + 4HCl$

It is the result of design expertise acquired by LPE since 1972 by manufacturing EPI reactors and through co- operating with leading semiconductor manufactures and university research centers.

LPE designed the PE 2061 as a response to the industry's requirements for systems producing low cost EPI films with superior control of critical parameters such as:

-high resistivity

-lowest autodoping

-long life

-process flexibility from less than one up to over 200 microns

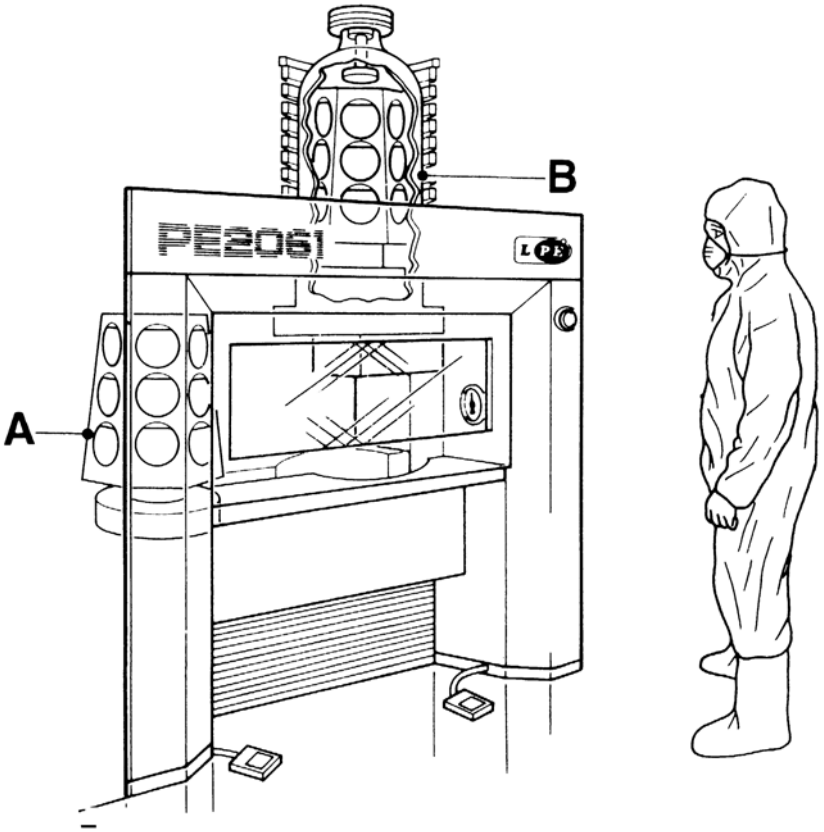

LPE decided to design a twin chamber reactor with large batch load, short cycle time and vertical barrel geometry.

This configuration allows you to maximize throughput with a highly compact reactor frame. The through-the-wall mounting configuration ensures no foot prints in the clean room ,while foot-prints in the gray area are minimal - i.e. similar to the floor space required by a single station reactor.

The PE 2061 is an induction heated reactor using a compact, solid state, low frequency, power generator , with very high electrical efficiency.

Wafers are mainly heated from the back making on-site back-sealing possible if needed. There is also a significant contribution to heating on the wafer front side (approx. 35%) through energy reflection by the susceptor.

Energy is radiated back to the wafer surface thanks to the patented special design of the induction coil.

This makes it possible to minimize thermal gradient across the wafers (with a few degrees difference between back and front sides) as well as power consumption.

Moreover, this heating system enables deposition of ultra thick EPI layers (up to 250 microns in a single process) with no substrate attaching to the susceptor.

The susceptor design ensures uniform temperature in wafer cavities.

Wafer temperature is accurately measured directly via an optical pyrometer.

Software control of temperature was optimized to ensure smoothness and precision.

This enables you to obtain high quality crystal structures.

The PE 2061 reaction chamber has also benefited from LPE's long standing design expertise.

There are no particle sources inside the chamber, the rotation unit is located downstream, and the wafers positioned vertically on the susceptor.

Only inert materials are in contact with reactant gases.

The chamber O-rings, which are subjected to a vacuum leak test, are water cooled and allowed absolutely no exposure to susceptor radiation. One-pass gas flow and the limited internal volume of the bell-jar ensure fast purging.

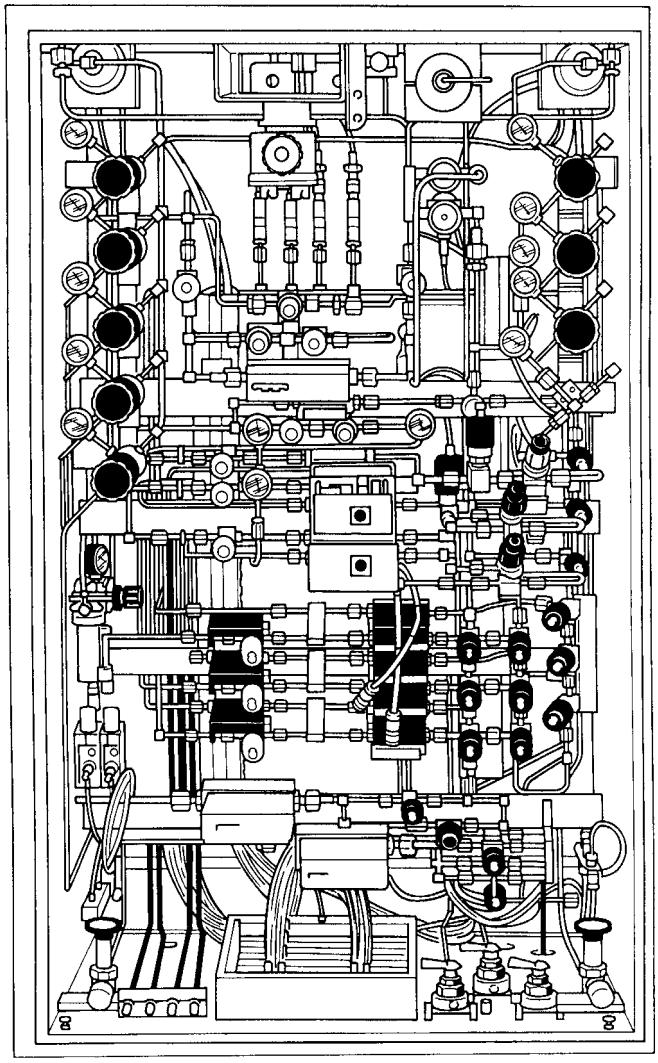

Gas flow has a built-in, easy to adjust, uniform distribution system inside the bell-jar. The susceptor is rotated to further ensure uniformity.

The quartz bell-jar is transparent with a controlled closed-loop air cooling facility. This helps the growth or very thick EPI layers without water surface faults and without deposits on the bell-jar internal wall. As a result, bell-jars seldom have to be removed for cleaning even when EPI layers of over 100 microns are deposited within.

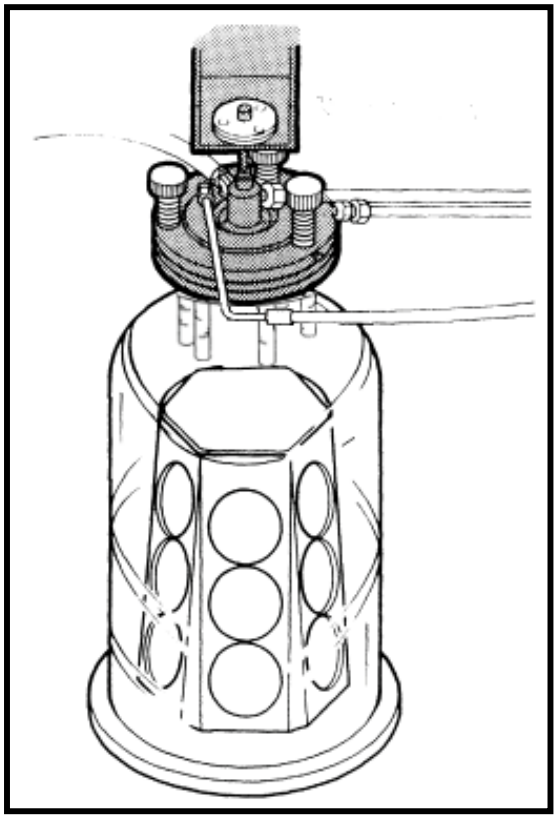

Careful yet simple design and use of quality components enhances reliability.

Easy access and maintainability enhances up-time.

Easy to-adjust process features ensure consistent, high quality reactor production.

Large throughput ensures low cost EPI films.

User friendly powerful software fully exploits the
PE 2061 reactor's great process flexibility.

Typical deposition work cycle

1. Reactor chamber opened.
2. Wafer manually loaded on a silicon lined graphite support (susceptor).
3. Reaction chamber closed.
4. Reaction chamber flushed or purged with nitrogen to eliminate residual air.
5. Reaction chamber flushed or purged with hydrogen to eliminate residual nitrogen.
6. Heating in hydrogen atmosphere at process temperature (from 850°C to 1,250°C max.).
7. If required, the wafer surface is prepared in a hydrogen atmosphere by light HCl (hydrochloric acid) etching.
8. Silicon deposited in hydrogen atmosphere by SiCl 4, SiHCl 3 and SiHCl 2, and, if necessary, layer doped during deposition by B2H6 or PH3 and AsH3.
9. Cooling in hydrogen atmosphere up to a temperature of approximately 800°C, also to eliminate residual reaction gases.
10. Further cooling in nitrogen atmosphere up to a temperature of approximately 200°C and elimination of hydrogen residue.
11 Reaction chamber opened and product discharged manually.

NOTE: It is the user's responsibility to define process parameters according to its product requirements.

Deposit removal cycle

1. Reaction chamber closed without wafer loaded.
2. Reaction chamber flushed or purged with nitrogen to eliminate residual air.
3. Reaction chamber flushed or purged with hydrogen to eliminate residual nitrogen.
4. Heating in hydrogen atmosphere at removal temperature (1,150°C to 1,250 °C).
5. Removal of silicon deposited on the susceptor in hydrogen atmosphere with a suitable concentration of HCl for an appropriate time period.
6. Cooling in hydrogen atmosphere up to a temperature of approximately 800°C, also to eliminate residual reaction gases.
7. Further cooling in nitrogen atmosphere up to a temperature of approximately 200°C, and elimination of hydrogen residue
8. Reaction chamber opened.

Note: t is the user's responsibility to define the typical parameters of the removal process .The frequency of the deposit removal cycle depends on the type of process employed.

Characteristics of silicon wafers

The characteristics of silicon wafers, gases used in the process, and treatment undergone by wafers before the epitaxial process, must be to (updated) **SEMI-INTERNATIONAL STANDARDS.**

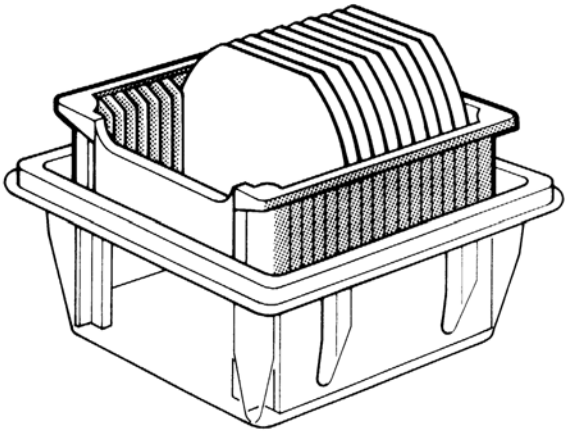

<u>Do not use</u> Gases other than those indicated below:

1	**N2**	Nitrogen
2.	**H2**	Hydrogen (conveying and process Gas).
3.	**Ar**	Argon
4.	**PH3**	Doped Gases. (mixtures of gases doped in **H2** with maximum concentration of **50 ppm**).
5.	**B2H6**	
6.	**B2H6**	

7.	**SiCl4**	Liquid compressed coumpound used in the process as a silicon source form of gases mixed with **H2**
8.	**SiHCl3**	
9.	**SiH2Cl2**	
10.	**HCl**	Pressure-liquefied anhydrous **HCl**

Substratum dimensions

The machines can handle wafers from **100** (4") to **200 mm** (8") in diameter.

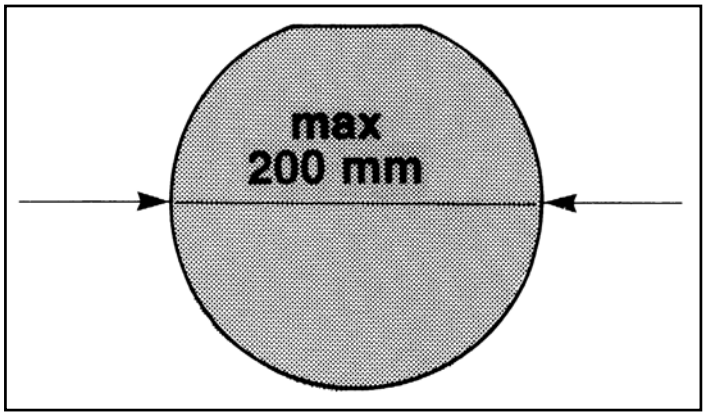

This section lists the new or improved features provided with PE2061S reactor in comparison with the standard model.

1) Power heat up during PRE H2 phase.

The PE2061S provide an increased throughput than a standard model by heating up the bell jar in stand by while the other bell jar is running the last minutes of process.
In the following diagram is shown the differences between the two systems.

Standard PE2061:

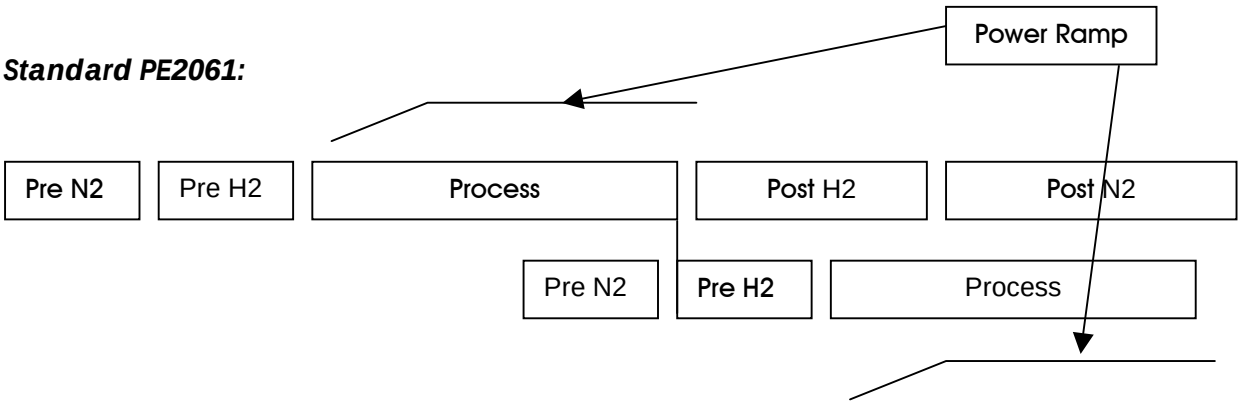

PE2061S:

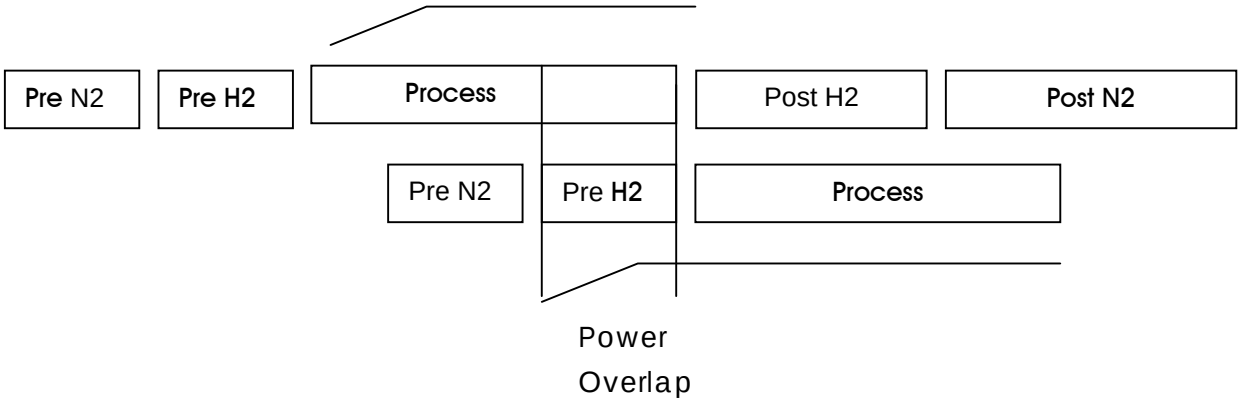

In order to activate the power overlap it is necessary to set the PE2061S option, placed in reactor installation as AVAILABLE.

Two new parameters, protected by supervisor password, have been added in the configuration menu:

Pre H2 Power Stab Value (Kw)
Pre H2 Power Ramp Time (mm:ss)

The Pre H2 phase has been divided into two parts:

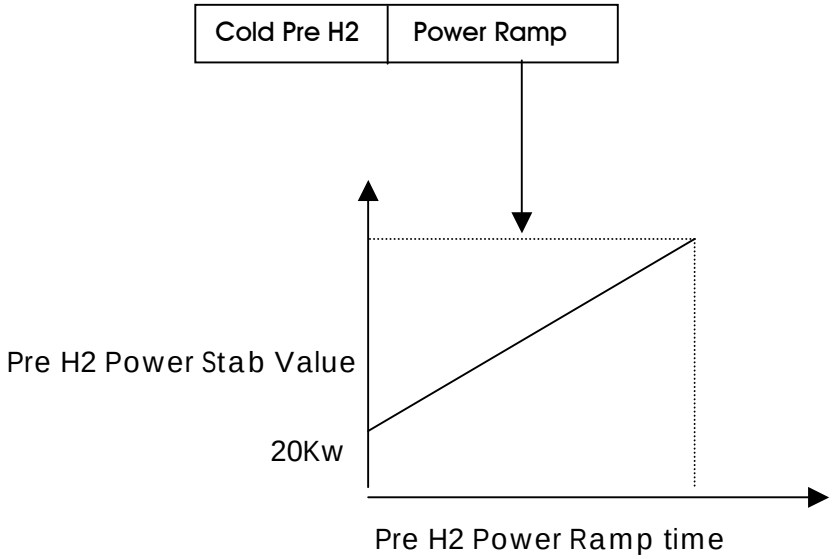

Time and flow for the Cold Pre H2 are set as in the standard PE2061.

The ***Pre H2 Power Stab Value*** and the ***Pre H2 Power Ramp time*** allows to set a power ramp during the Pre H2 phase.

Therefore the total PRE H2 Time is given by PRE H2 time + Pre H2 Power Ramp time.

It is advisable to set a power ramp in order to reach 850-900 °C (the minimum temperature read by the pyrometer) and start the process with a standard temperature ramp (900° to deposit temp).

New software controls and features :

- HOLD command is not allowed when the other bell jar is in WAIT status. It will be necessary to stop the bell jar in WAIT before proceeding.
- Rotation will start during PRE H2 and not only during PROCESS as in standard PE2061.
- Is not permitted to run a recipe having a temperature step without a power if there is no power heat up in PRE H2.
- A forced run will make the bell jar to jump to PRE H2 (not to PROCESS).
- Alarms will cause the bell jar to jump from PRE H2 to POST H2 (not to PRE N2).
- Stop command will cause the bell jar to jump from PRE H2 to POST H2 (not to PRE N2).
- If the parameter ***Pre H2 Power Stab Value*** is set at 0Kw there will be no power ramp during

PRE H2.

2) HCl Line

Currently the HCl line can operate in two different methods:

Gas Etch : HCl flow is set in the recipe and during process it is controlled by MFC 8

Susceptor Etch : the HCl flow needed it is higher than the MFC range and therefore it is adjusted by means of a metering valve (MV8)

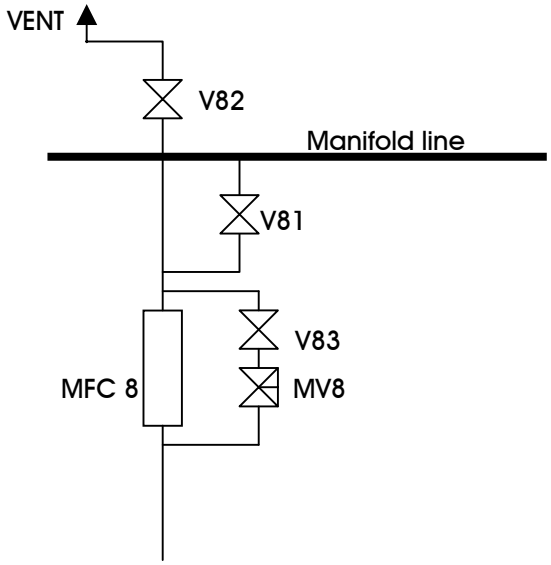

In the PE2061s a MFC has been added in order to carefully control the HCl flow during Gas etch.

The system will automatically select the MFC to be used and the valve to be energized according to the flow set point.

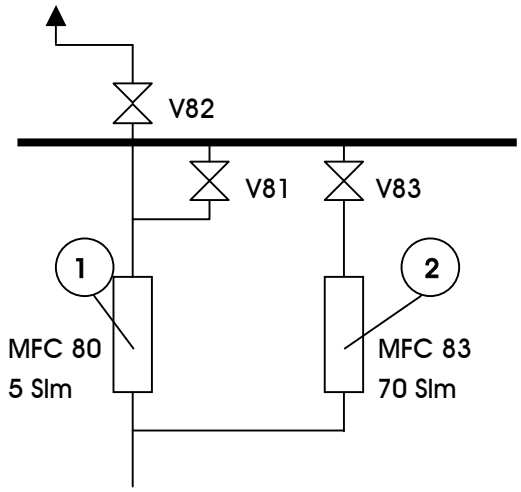

Example:

Command	*Start Value*	*Stab Value*	*Vent Time*	*Start Time*	*Ramp Time*	*Stab Time*
HCl	4	4	1	0	0	5:00

This recipe will activate the line of HCl nr. 1 because the desired HCl flow can be achieved using the small MFC.

The following recipe will activate the HCl lin nr.2. Please note that, in order to avoid a useless waste of gas, HCl line 2 has no vent valve and therefore it is advisable to set vent time to zero.

Command	*Start Value*	*Stab Value*	*Vent Time*	*Start Time*	*Ramp Time*	*Stab Time*
HCl	54	54	0	0	0	5:00

NOTE: THE QUANTITY AND CONTENTS OF CASES MAY VARY, AS THE SUPPLY MAY INCLUDE OTHER PARTS OR OPTIONAL ITEMS ACCORDING TO ORDER.

On receiving the machine, check that:

- the packing is intact
- the supply corresponds to the order specifications (see freight bill or packing list)
- there is no damage

In the event of damage or missing parts, immediately notify the carrier and LPE or its area representatives in detail.
The standard supply includes the following parts:

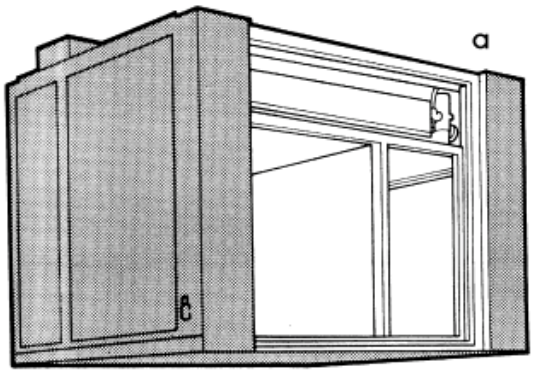

Box 1

a) UPPER STATION
b) 4 SPACER SCREWS
c) SHIELD WITH COVER

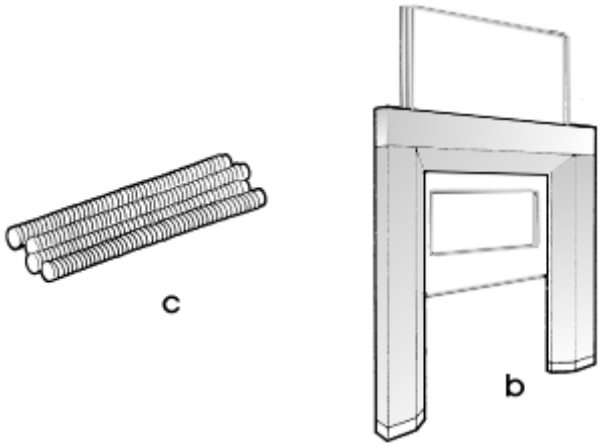

APPROXIMATE DIMENSIONS:
2080 x 1880 x 1680 h mm
(81,89" x 74,02" x 66,14")

WEIGHT: 780 Kg
(1719 lb)

Box 2

d) LOWER STATION
e) FRONT PANEL
f) 4 FEET

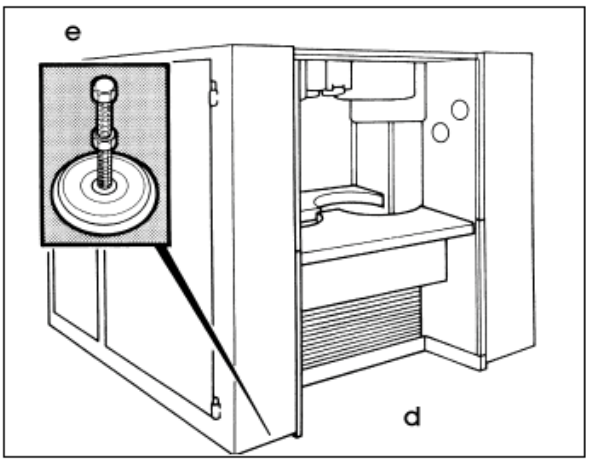

APPROXIMATE DIMENSIONS:
2080 x 1880 x 1930 h mm
(81,89" x 74,02" x 75,99")

WEIGHT: 1500 Kg
(3306 lb)

Box 3

g) POWER GENERATOR
h) COAXIAL CABLES

APPROXIMATE DIMENSIONS:
2050 x1100 x 2260 h mm
(80,71" x 43,31" x 88,98")

WEIGHT: 1380 Kg
(3042 lb)

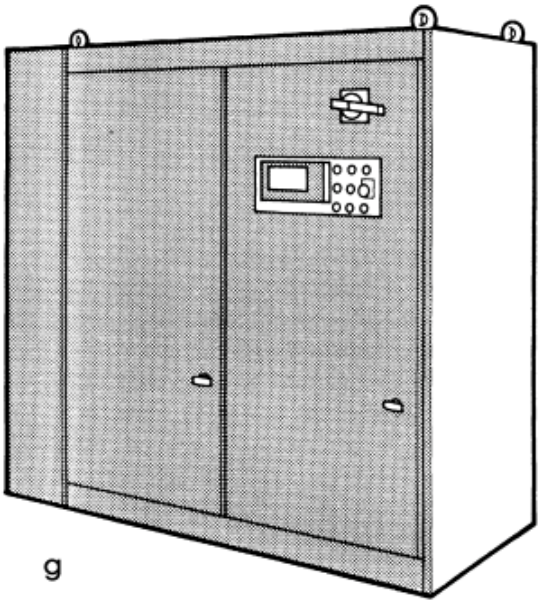

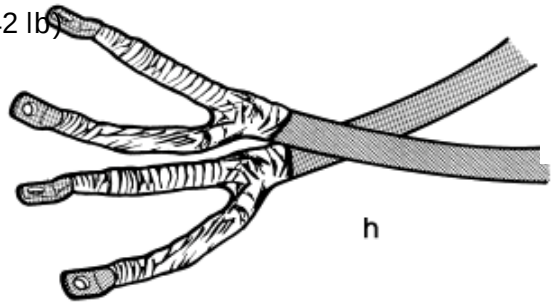

Box 4

i) BUBBLER

j) CONDENSERS

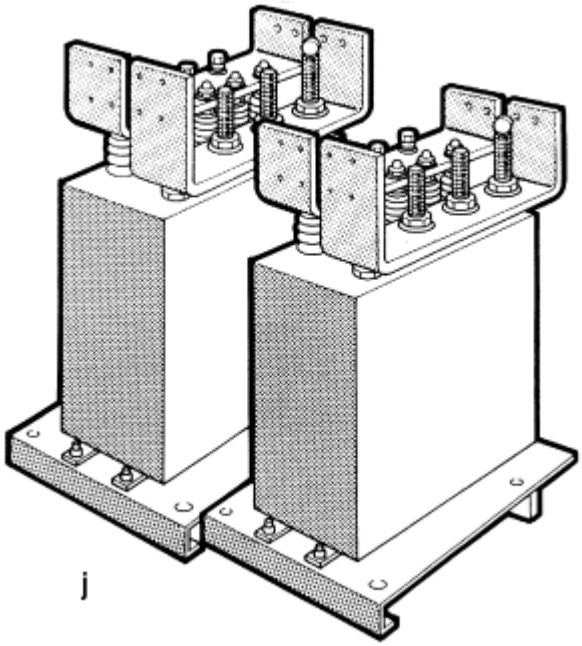

k) INDUCTOR COILS

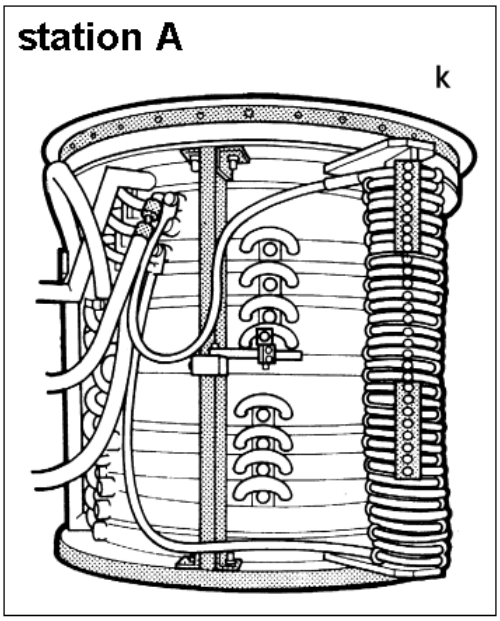

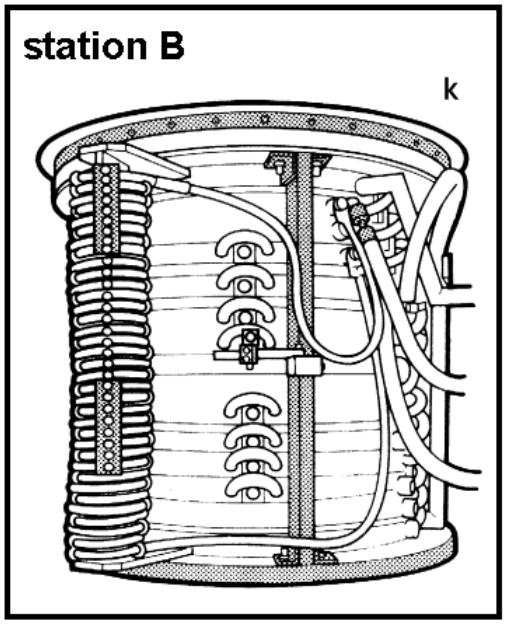

APPROXIMATE DIMENSIONS:
1470 x 1180 x1230 h mm
(57,88" x 46,46" x 48,42")

WEIGHT: 470 Kg
(1036 lb)

Box 5

l) WORKSTATION AND ACCESSORIES

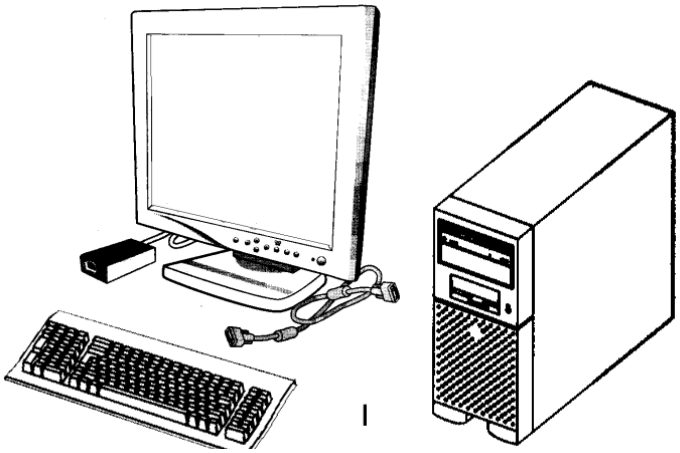

m) 2 SETS OF TECHNICAL DOCUMENTATION
- one for Clear Room on Compact Disc
- one for Gray Room on paper

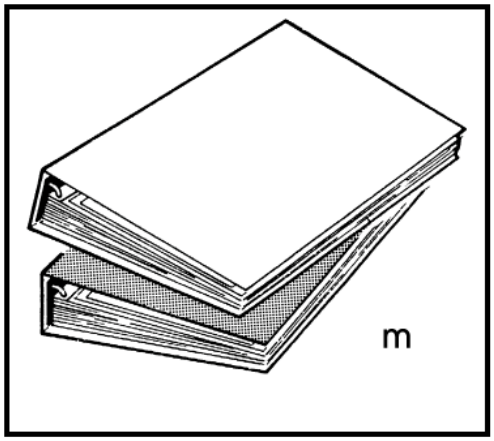

n) SET OF QUARTZ PIECES

APPROXIMATE DIMENSIONS:
1920 x 780 x 1240 h mm
(75,59" x 30,71" x 48,82")

WEIGHT: 300 Kg
(661 lb)

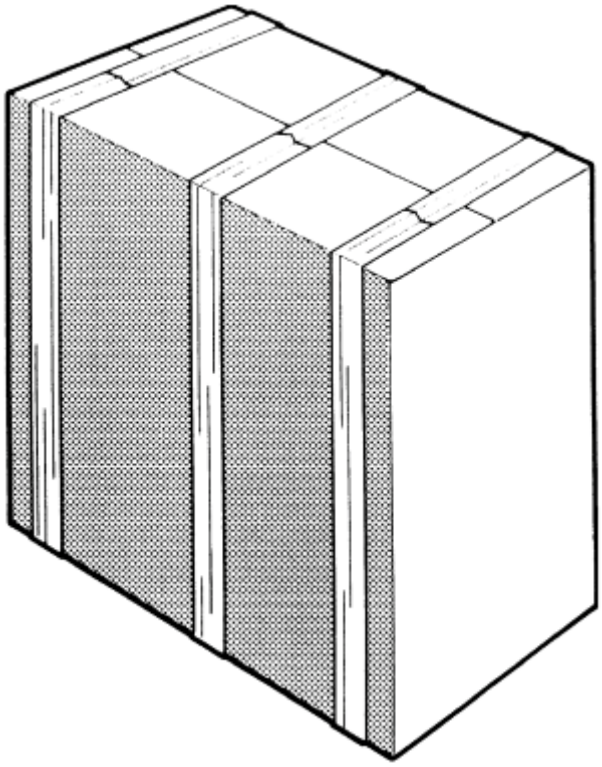

Box 6 and 7 (cartons)

Containing the QUARTZ BELL JARS

APPROXIMATE DIMENSIONS of each cartons:
1150 x 600 x 800 h mm
(45,28" x 23,62" x 31,50")

WEIGHT: 30 Kg
(66 lb)

Box 8

OPTIONAL (Susceptor Forklift)

APPROXIMATE DIMENSIONS of each cartons:
730x 730 x1240 h mm
(28,74" x 28,74" x 48,82")

WEIGHT: 70 Kg
(154 lb)

This chapter brings out, for all models, the General Equipment Datasheet of the Installation Specifications.
The complete and personalize Installation Specifications is already supplied to the Customer, before the Reactor delivery. However a copy of the Installation Specifications is enclosed to the Instruction Manual

WARNING

The connections described in the Installation Specifications, must be carried out by specialized personnel appointed by the customer under its own responsibility.

⚠ATTENTION

It is the Customer's responsibility to supply facilities according to the Installation Specifications and deliver them to the reactor, routing the tubes/cables of specified size and material to the connecting points indicated in the Installation Specifications or in the quoted drawings.

- **General Equipment Datasheet**

WARNING

ONLY FOR PE2061

POWER

Item	Volts	Tolerance	Freq.	Phase	Peak	Normal	KVA	Pow. conn.	Note
Epir. PE2061	400 V 480 V	± 5 %	50 Hz 60 Hz	3 ph + N 3 ph	20 A 20 A	10 A 8 A	5,5	cable	\\
UPS	230 V 115 V	± 5 %	50 Hz 60 Hz	1 ph + N 1 ph + N	10 A 20 A	6 A 10 A	1,2	plug	\\
Epir. PE2061	230 V 115 V	± 5 %	50 Hz 60 Hz	1 ph + N 1 ph + N	10 A 13 A	3 A 6 A	0,7	cable	from UPS
Epic. LF150	400 V 480 V	± 5 %	50 Hz 60 Hz	3 ph 3 ph	275 A 230 A	170 A 150 A	120	cable	\\

THERMAL OUTPUT

Item	In Water	In Exhaust	To Ambient	Other
Epireactor	80,000 Kcal/h avg.	5,000 Kcal/h avg.	5,000 Kcal/h avg.	\\
Epiconverter	8,000 Kcal/h avg.	\\	1,000 Kcal/h avg.	\\

EXHAUST REQUIREMENTS

Epireactor	Material/Size	Flow	Static Press.
Scrubber station A	st.st. 1 1/4"	350 slm	- 2 KPa
Scrubber station B	st.st. 1 1/4"	350 slm	- 2 KPa
Air exhaust	st.st./PVC dia. 250 mm	2,500 c.m./h	- 500 Pa

DI WATER REQUIREMENTS

	Flow	Resistivity	Temp.	Press.	Fitting Size	Fitting Type	Filter
Epic. LF150	1 lt./day (refilling)	> 20 KΩ.cm	room	> 3 psi	3/8"	Swagelok	none

PROCESS COOLING WATER

Item	Flow	Inlet Temp.	Δ Temp. Outlet	Press. +/-	Press. Drop	Fitting Size	Fitting Type	filter
Epir. PE2061	200 lt./min	min 14/ max 24 °C	+ 7 °C	min 300/ max 600 KPa	250 KPa	1 1/2"	BSP fem. or NPT male	250 μ
Epic. LF150	20 lt./min	min 14/ max 24 °C	+ 7 °C	min 300/ max 600 KPa	250 KPa	3/4"	BSP fem. or NPT male	none

BULK & SPECIALTY GASES

Substance	Flow	Purity	Press. +/-	Fitting Size	Fitting Type	Fitting Material	Filter
H2	450 slm	> 6N	> 60 psi	1/2"	VCR female	AISI 316 L st.st.	none
N2	300 slm	> 6N	> 60 psi	1/2"	VCR female	AISI 316 L st.st.	none
HCl	70 slm	> 4N5	> 60 psi	1/4"	VCR female	AISI 316 L st.st.	none
Dope	≤ 1 slm	> 6N	> 60 psi	1/4"	VCR female	AISI 316 L st.st.	none
TCS/TET mix	50 slm	> 3N	> 20 psi	1/2"	VCR female	AISI 316 L st.st.	none

WARNING

ONLY FOR PE2061S

POWER

Item	Volts	Tolerance	Freq.	Phase	Peak	Normal	KVA	Pow. conn.	Note
Epir. PE2061	400 V 480 V	± 5 %	50 Hz 60 Hz	3 ph + N 3 ph	20 A 20 A	10 A 8 A	5,5	cable	\\
UPS	230 V 115 V	± 5 %	50 Hz 60 Hz	1 ph + N 1 ph + N	10 A 20 A	6 A 10 A	1,2	plug	\\
Epir. PE2061	230 V 115 V	± 5 %	50 Hz 60 Hz	1 ph + N 1 ph + N	10 A 13 A	3 A 6 A	0,7	cable	from UPS
Epic. IFC 150/2	400 V 480 V	± 5 %	50 Hz 60 Hz	3 ph 3 ph	320 A 260 A	190 A 160 A	130	cable	\\

THERMAL OUTPUT

Item	In Water	In Exhaust	To Ambient	Other
Epireactor	80,000 Kcal/h avg.	5,000 Kcal/h avg.	5,000 Kcal/h avg.	\\
Epiconverter	8,000 Kcal/h avg.	\\	1,000 Kcal/h avg.	\\

EXHAUST REQUIREMENTS

Epireactor	Material/Size	Flow	Static Press.
Scrubber station A	st.st. 1 1/4"	350 slm	- 2 KPa
Scrubber station B	st.st. 1 1/4"	350 slm	- 2 KPa
Air exhaust	st.st./PVC dia. 250 mm	2,500 c.m./h	- 500 Pa

PROCESS COOLING WATER SOFTENED

Item	Flow	Inlet Temp.	Δ Temp. Outlet	Press. +/-	Press. Drop	Fitting Size	Fitting Type	filter
Epir. PE2061	200 lt./min	min 14/ max 24 °C	+ 7 °C	min 300/ max 600 KPa	250 KPa	1 1/2"	BSP fem. or NPT male	250 μ
Epic. IFC 150/2	40 lt./min	min 14/ max 24 °C	+ 7 °C	min 300/ max 600 KPa	250 KPa	3/4"	BSP fem. or NPT male	none

BULK & SPECIALTY GASES

Substance	Flow	Purity	Press. +/-	Fitting Size	Fitting Type	Fitting Material	Filter
H2	450 slm	> 6N	> 60 psi	1/2"	VCR female	AISI 316 L st.st.	none
N2	300 slm	> 6N	> 60 psi	1/2"	VCR female	AISI 316 L st.st.	none
HCl	70 slm	> 4N5	> 60 psi	1/4"	VCR female	AISI 316 L st.st.	none
Dope	≤ 1 slm	> 6N	> 60 psi	1/4"	VCR female	AISI 316 L st.st.	none
TCS/TET mix	50 slm	> 3N	> 20 psi	1/2"	VCR female	AISI 316 L st.st.	none

☞ IMPORTANT NOTE

The operations described in CHAPTER 8 (FROM PAGE 8-4) are for the first installation *LPE'S RESPONSIBILITY* and HAS NOT TO BE CARRIED OUT BY PERSONNEL APPOINTED BY THE CUSTOMER.

⚠ CAUTION

TRANSPORT MUST BE CARRIED OUT BY SPECIALIZED FORWARDERS AWARE OF THE RELEVANT TRANSPORT DIRECTIVES.

⚠ CAUTION

UNAUTHORIZED PERSONS MUST NOT STAND IN THE VICINITY DURING TRANSPORT OPERATIONS:

DANGER OF SUSPENDED LOADS.

The machine is shipped in numbered cases also containing dismantled parts and accessories/tools.

The contents of each case are according to the PACKING LIST and to marks on the outside of each case to facilitate the case opening sequence.

Marks on the outside of each case: center of gravity, rope inclination and packing weight

The content of every box is protected by an aluminum plate shield type MIL-B-131-H class1 and polyethylene film. Hygroscope bags containing salt are used to protect against humidity during transport.

The electrical equipment was designed to tolerate shipping and storage temperatures in the range -25°C to + 55°C and for brief periods not exceeding 24 hours, up to +70°C.

Before transporting the cases to the machine installation area, check the IMPACT and TILT MONITOR system installed on the outside of the cases and on the barrier bag.

Notify the forwarder and LPE in case of damage.

Cases or pallet must be transported near to the installation area (see LAYOUT) using suitable means of transport (fork-lift trucks, hooks, bridge cranes, etc.), with a load bearing capacity of > 2,000 kg.

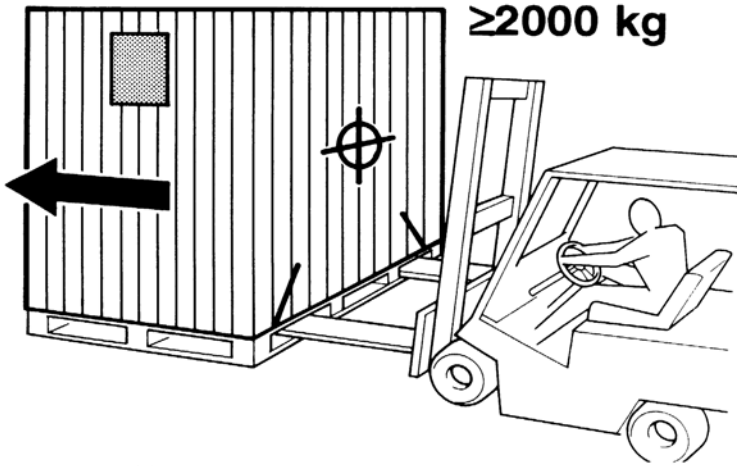

To transport the case containing the **lower station,** check the fork insertion point shown on the case and position the forks at a distance of **1.2 m.**

According to the sales contract, the machine is positioned by the technicians sent out by LPE.
When this personnel arrive, the foundations must be ready and cases located near the positioning area.

After receiving the installation specifications, one of the Customer's personnel must prepare the installation lay-out by consulting the overall dimensions diagram and the installation specifications.

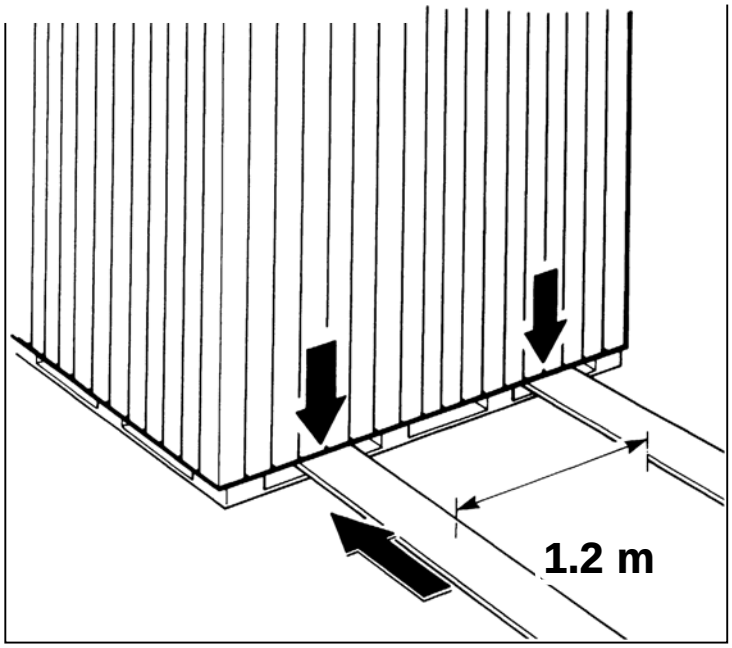

The floor must be even and the machine must be perfectly leveled. Draw the lay-out allowing for a distance from walls or other machines as shown in the figure.

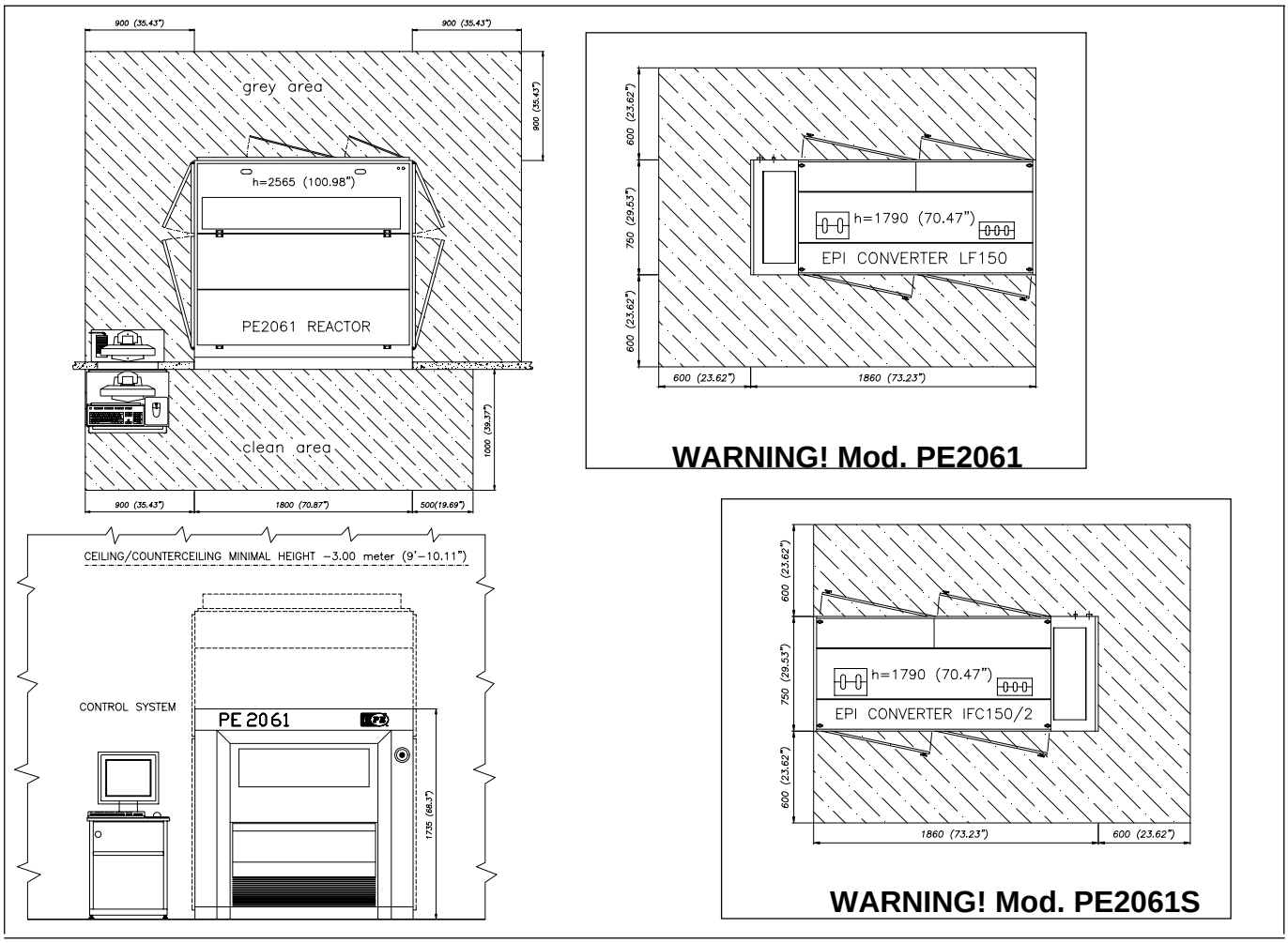

NOTE: We remind you that the main fluid, compressed air, condensate recovery, power and gas supply lines must be provided by the customer for connection to the machine. For capacities, installed power, as well as compressed air and gas characteristics, consult the technical specifications annexed to the documentation sent by LPE before machine delivery.

⚠ CAUTION

ALWAYS OPEN CASES STARTING FROM THE COVER AND OBSERVE INSTRUCTIONS ON THE CASES SHOWING YOU HOW TO OPEN THE LATERAL SECTIONS.

Open case #1 and then the successive cases in numerical order.

NOTE: After you have opened the cases and removed the straps and polyethylene film, do not disperse the material in the environment but keep them for future shipments or delivery them to appropriate waste disposal companies.

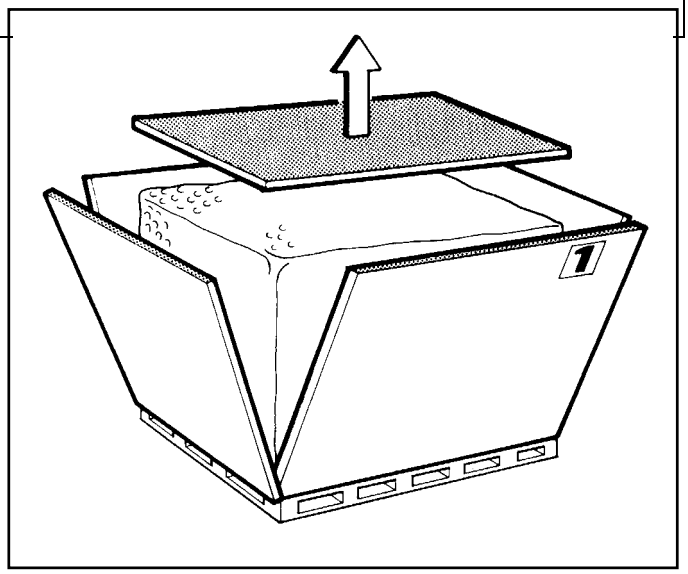

Unpacking and installation sequence of lower and upper stations

1. Remove the barrier bag, cutting it at its base. Check for any damage and if noted, notify the forwarder and LPE immediately.

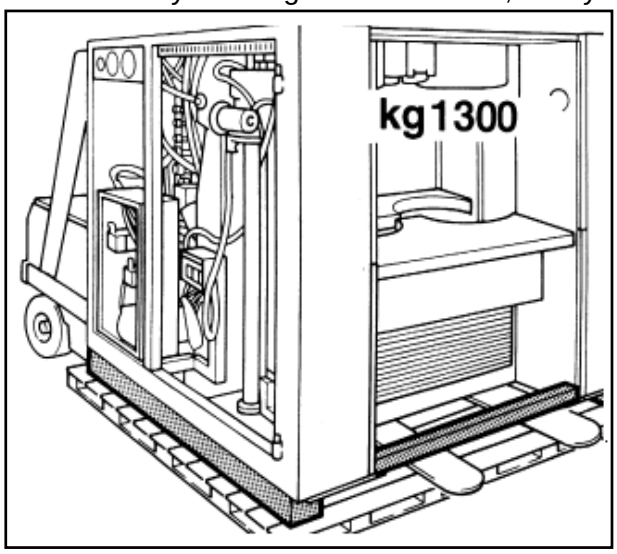

NOTE : REMOVE GUARDS AND PROTECTIVE DOORS TO FACILITATE INSTALLING THE STATIONS.

2. The lower station is not supported directly by he pallet but is borne by two wooden blocks.

The two blocks and the beam at the front enable you to slide the truck forks under without damaging the structure and unbalancing the machine.

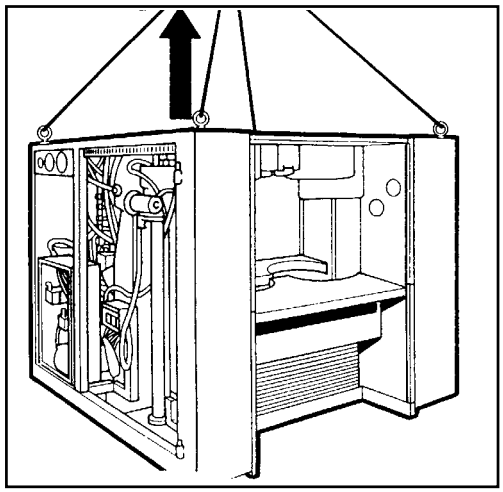

NOTE : THE LOWER STATION MAY ALSO BE TRANSPORTED BY USING THE 4 EYE-BOLTS SUPPLIED.

3. Lay the lower station on a set of spacers.

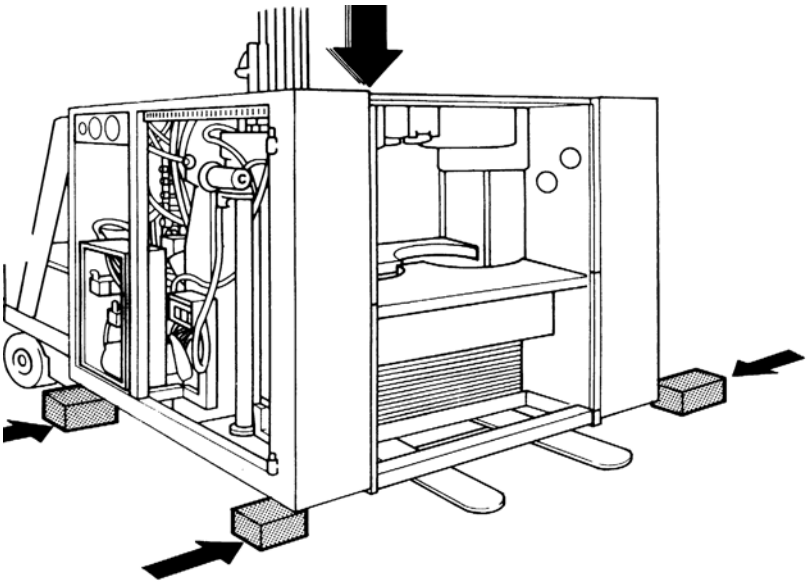

4. Sling the upper station using a crane, platform, pantograph, trolley or other means a height of **1.60 m**, with a capable of reaching weight bearing capacity of **400 kg.**

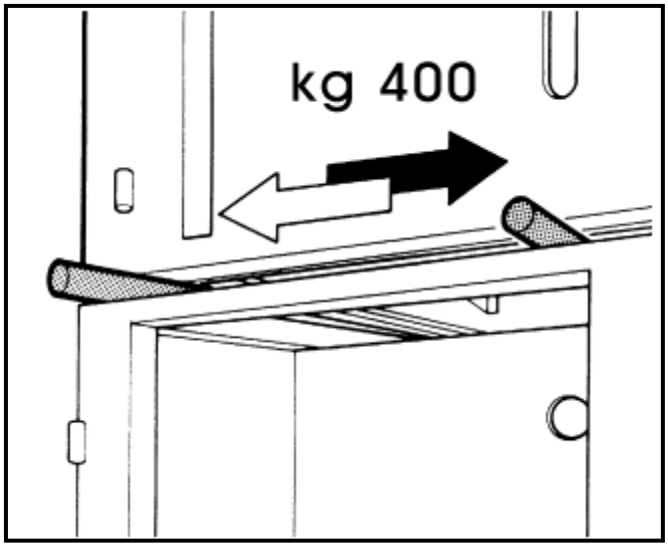

5. Using the plastic rollers as a slide, locate the upper station on top of the lower station.

⚠ CAUTION

DANGER OF CRUSHED HANDS, WEAR PROTECTIVE GLOVES.

6. Fit the 4 spacer screws and raise the upper station to allow the inductor tubes to be installed.

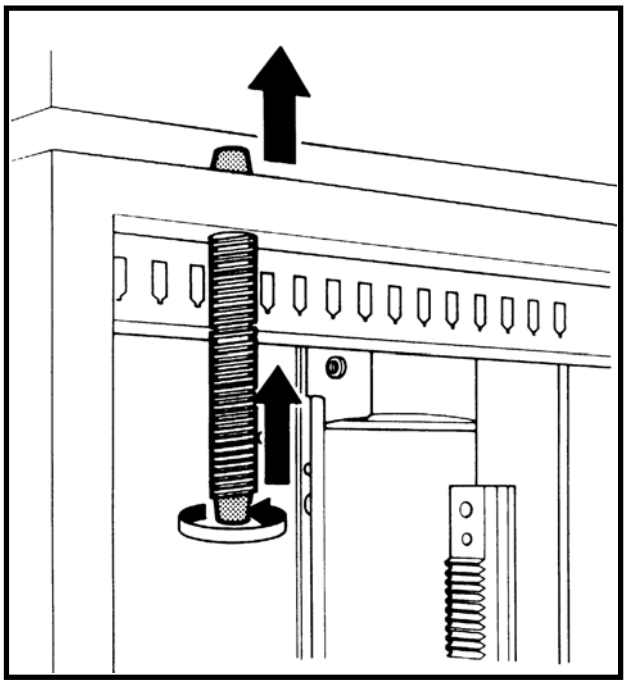

7. Fit the inductor tubes in the appropriate holes.

⚠ CAUTION

THE TUBES MUST NEITHER INTERTWINE NOR HAVE ANY NARROWED SECTIONS, BUT SHOULD BE ALIGNED.

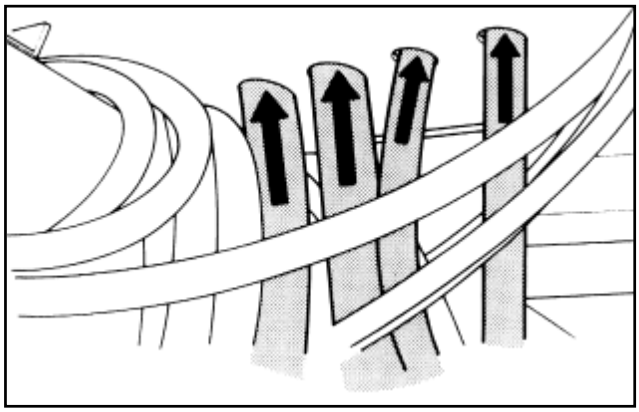

8. Allow the upper station to descend by unscrewing the 4 spacer screws and fit the supplied 8 Allen screws without tightening them fully.

When the upper station is about 3mm from the lower station, fit the profiles and secure the 2 stations with the 8 Allen screws.

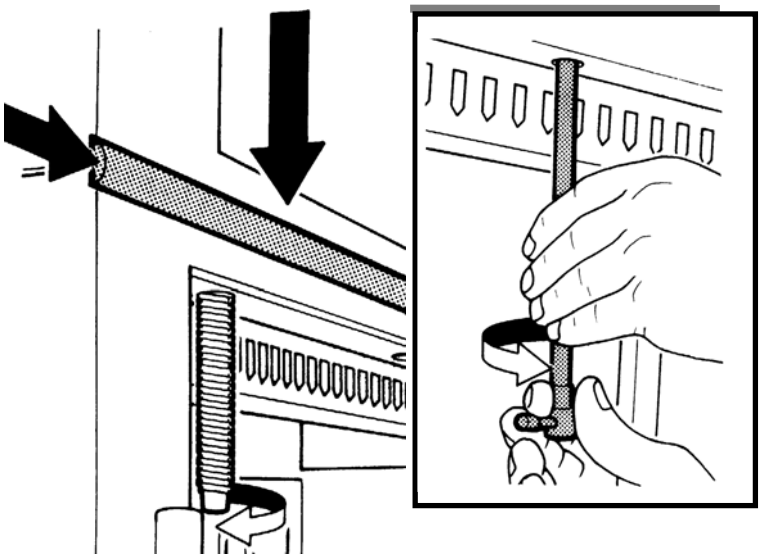

9. Check if there is any paint on the ground contact points as indicated, and tighten the earth connections between the two stations.

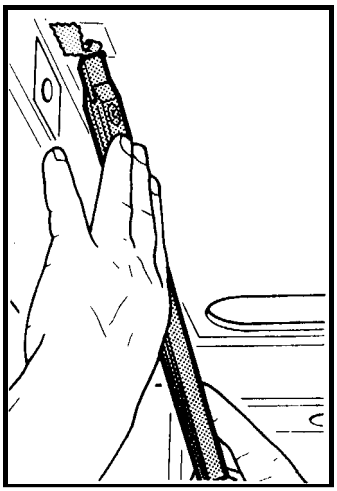

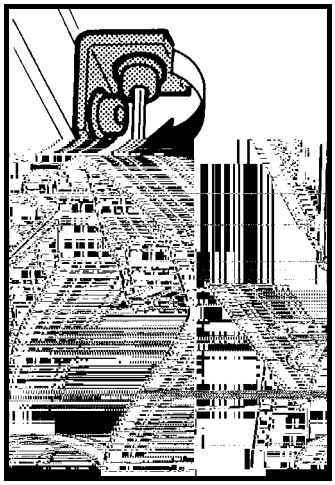

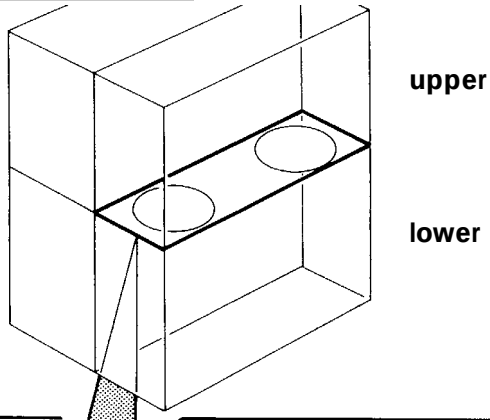

10. Apply silicon on the perimeter of the aluminum internal plate on the frame, at the joining points between the upper and lower stations.

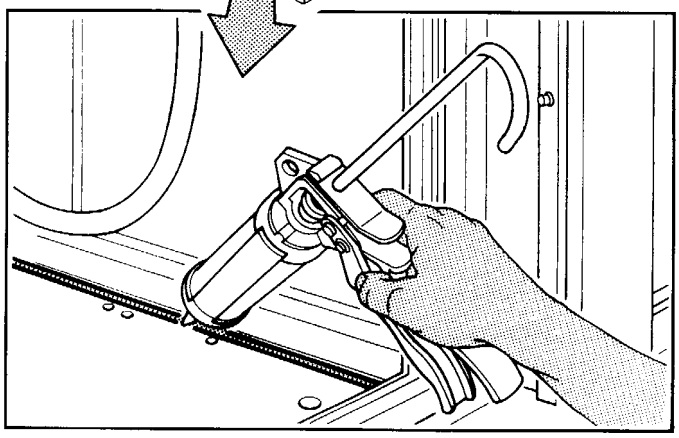

11. Install the front section as follows:

a. Fit the guides and install the shield inside the guides;

b. Fit the belts on the panel rollers and secure them using the ELEVATOR clamps.

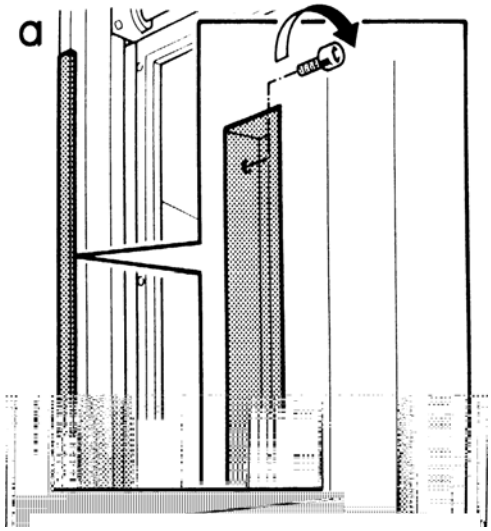

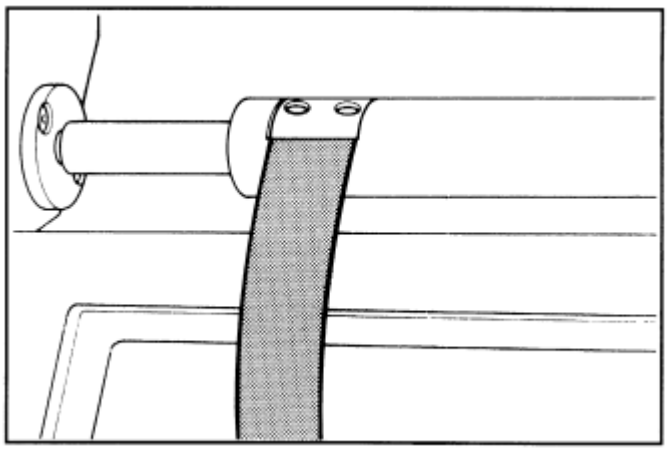

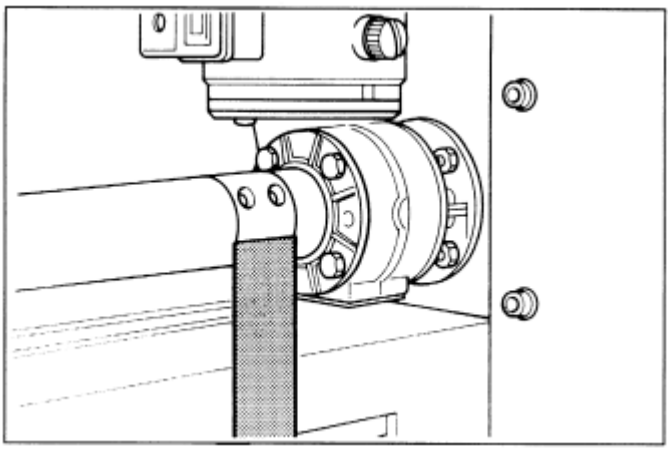

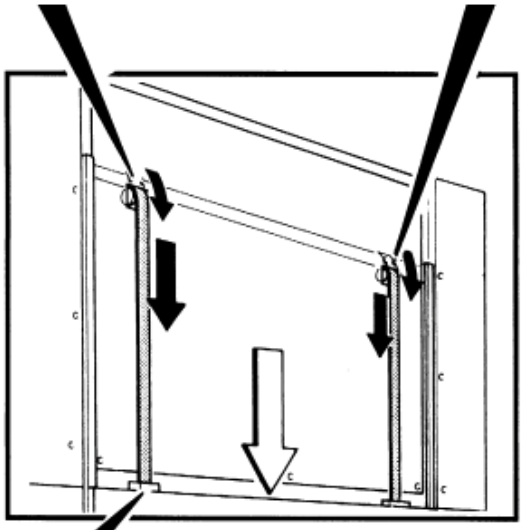

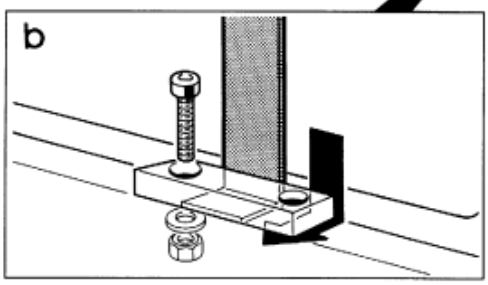

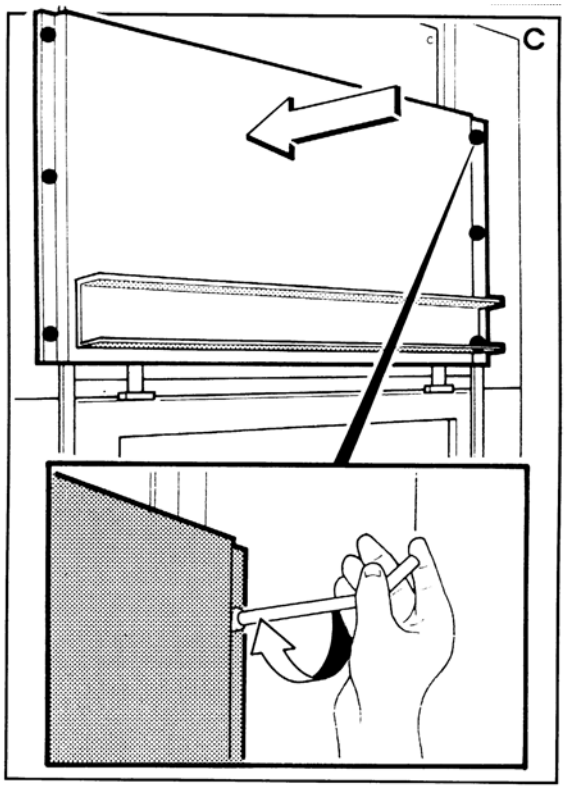

c. Secure the shield cover at the points indicated.

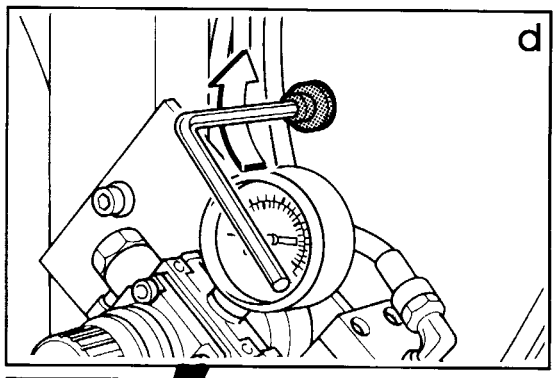

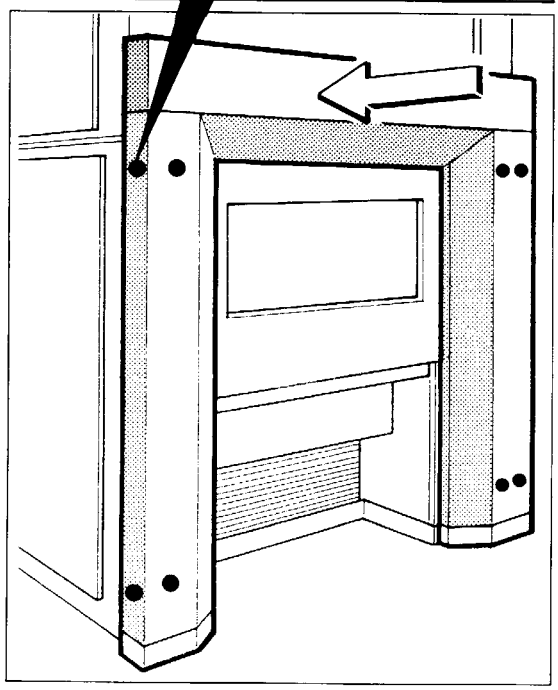

d. Fit the front section panels, and secure the front section from the inside of the frames, at the points indicated.

12. Next, locate the station in its definitive position.

Remove the beam and fit 4 feet at the sides of the lower station.

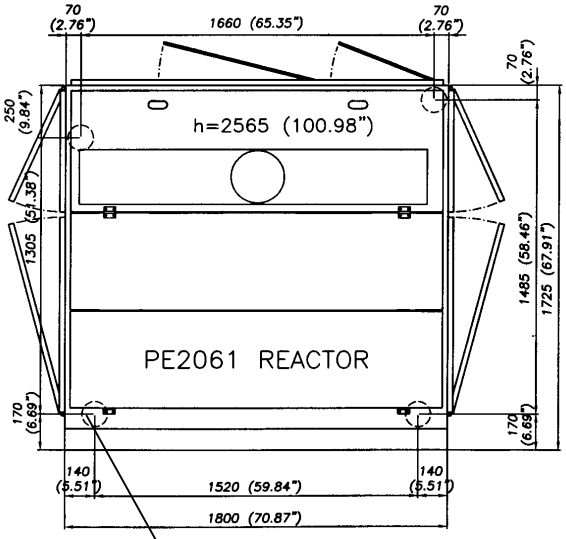

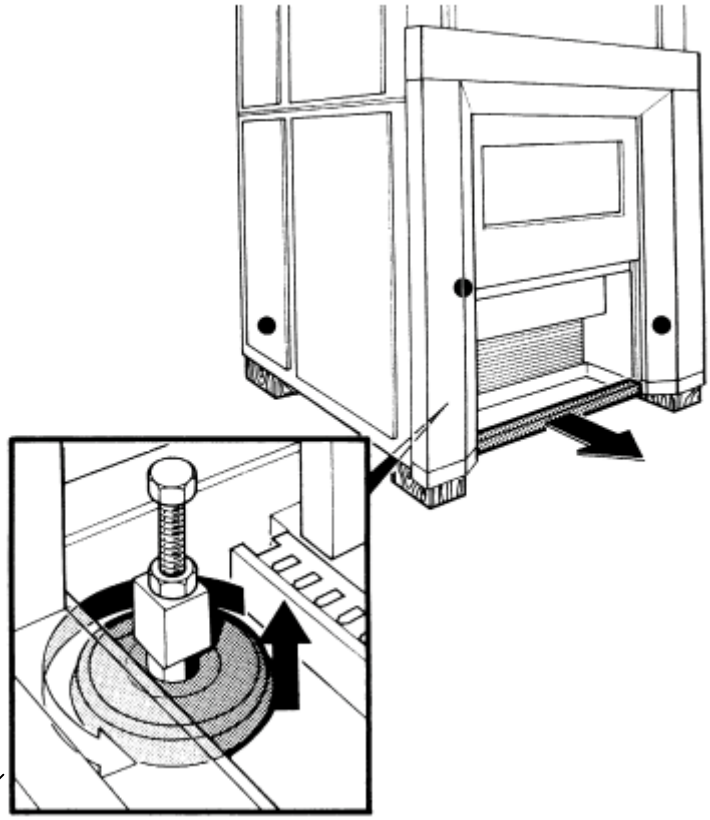

Support location
N. 4 supports dia. 120 mm (4,72")
Total weight: 2,100 Kg

Adjust the 2 super-imposed stations to a maximum off the floor height of **50 mm.**

Procedure: use a nut, lock-nut, plus a square tube to gauge correct height.

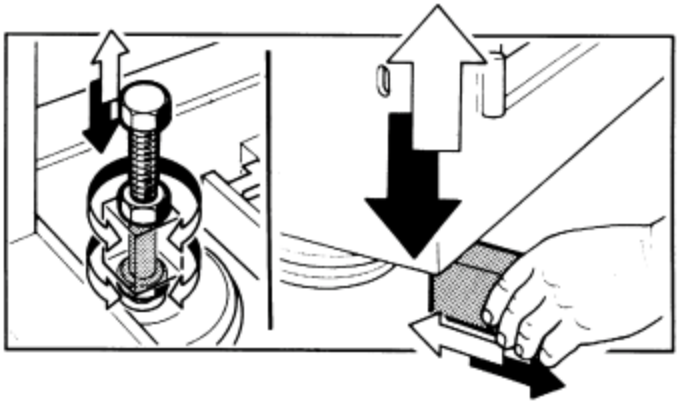

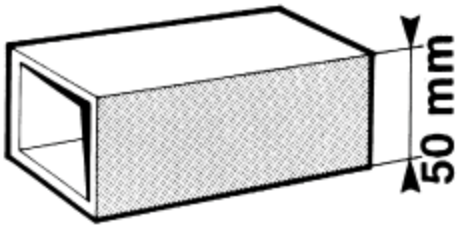

13. Level the station as follows:

a. remove the rotating unit guard;
b. remove the belt;
c. unscrew the nut and remove the flange;
d. remove the shaft;
e. position the round bar and spirit level (with hundredth scale) both horizontally and transversally.
f. use the adjusting feet to level and lock

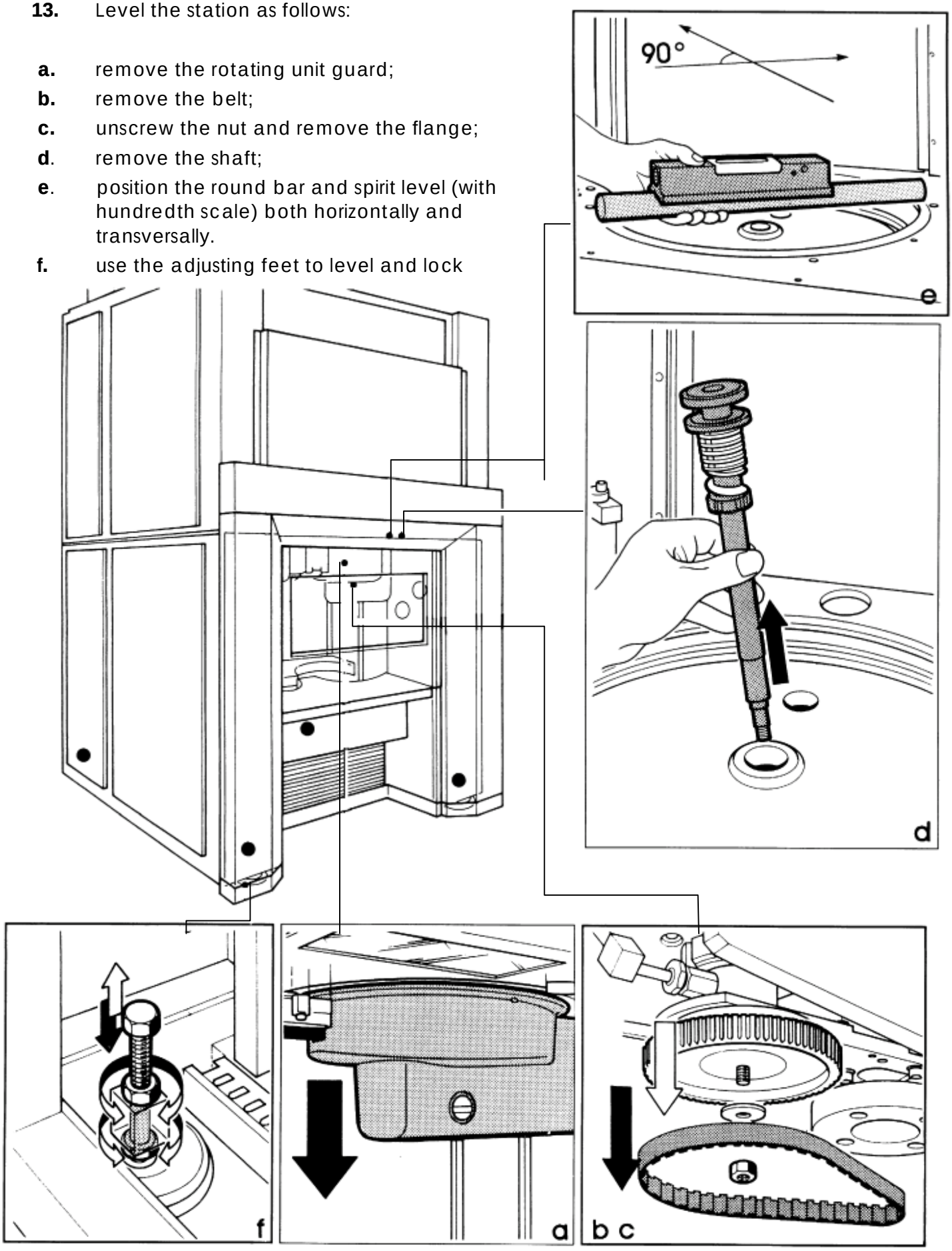

INSTALLING THE INDUCTOR COILS (ON 2 STATIONS A AND B)

Procedure for installing the inductor on station **B.**

Note: An identification label is affixed to each inductor to enable you to position the inductors in the correct stations.

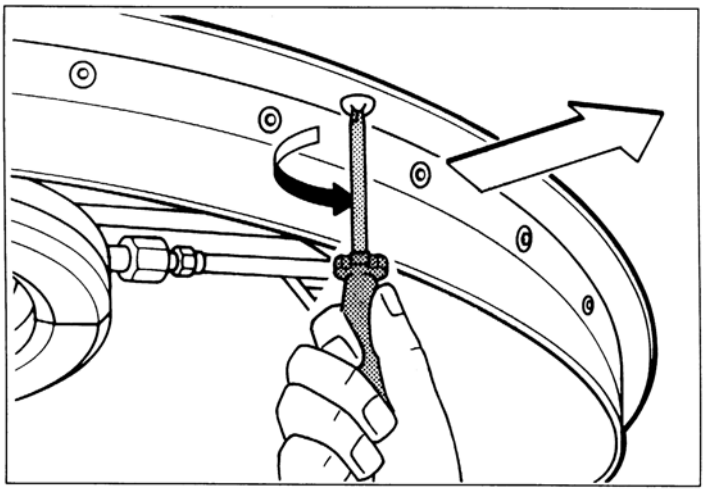

14. Unscrew half of the Teflon ring around the inductor, using the screws provided.

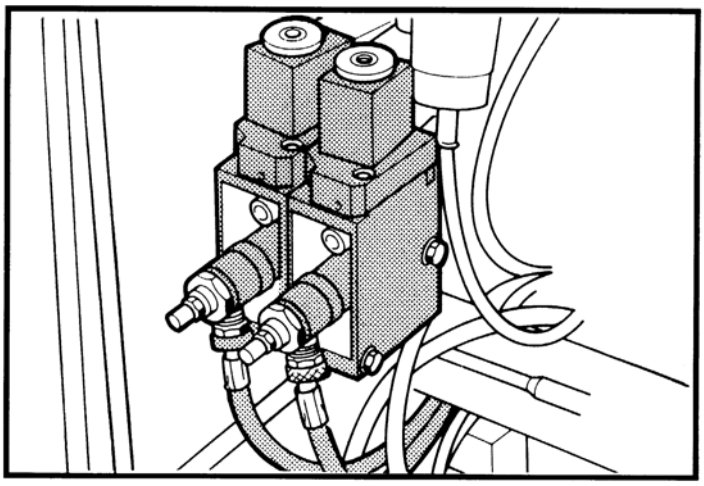

15. Fit the compressed air tubes on the spoiler, matching the relevant numbers.

16. Fit 2 of the 3 supports, matching the numbers on the support with those on the shutter-plate.

Note: Keep only the external support unscrewed toward the door and dismantle the eccentric.

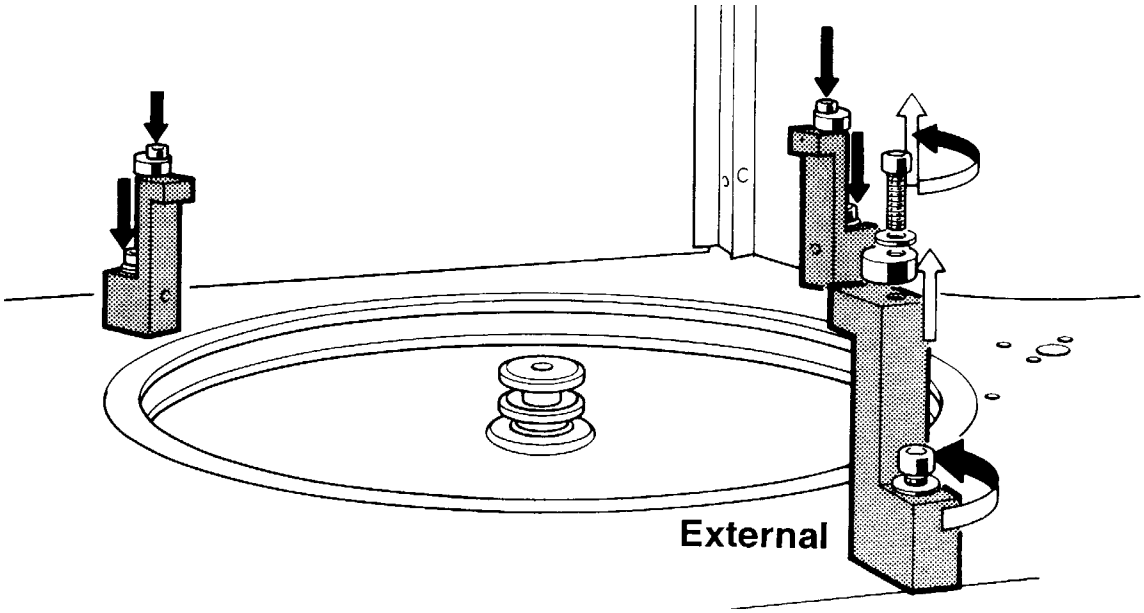

17. Spoiler activation

Connect the SPOILER tubes.

The tube marked **EVTA** connects solenoid-valve **EVTA** to connector **A** of the spoiler.

The tube marked **EVTB** connects solenoid-valve **EVTB** to connector **B** of the spoiler.

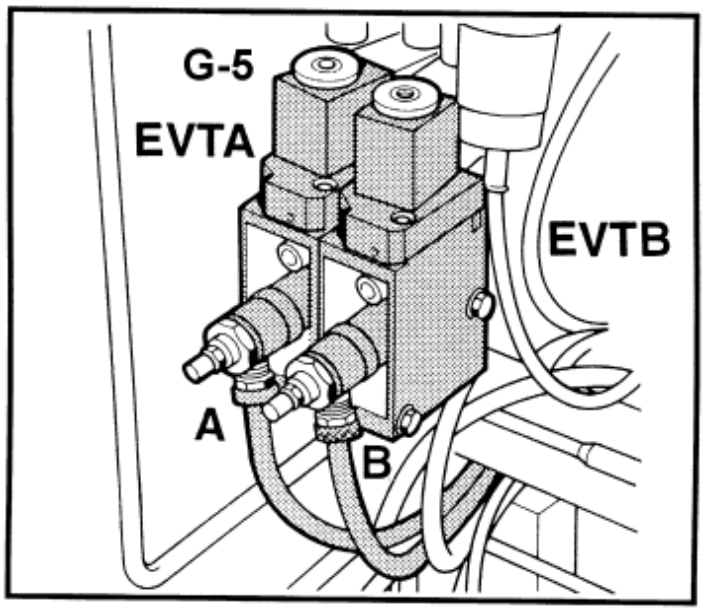

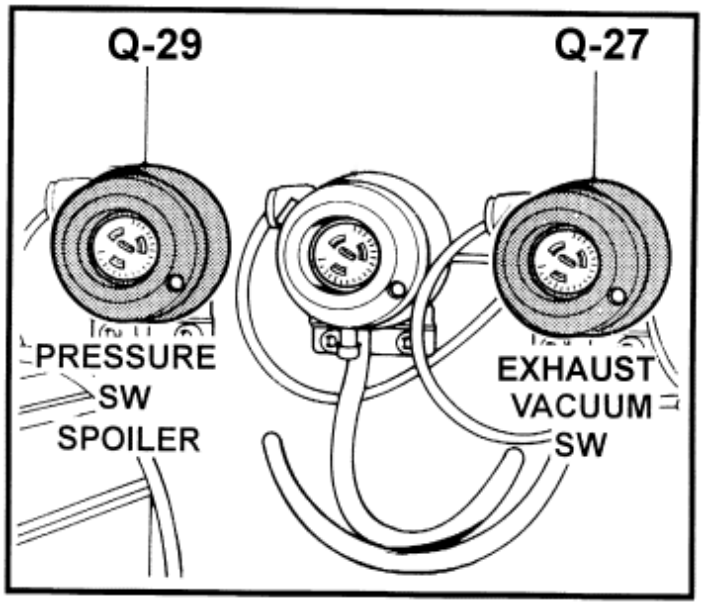

18. Pressure switch connection

Check the pressure switch tubes route referring to points **Q27-29** and drawing **group Q.**

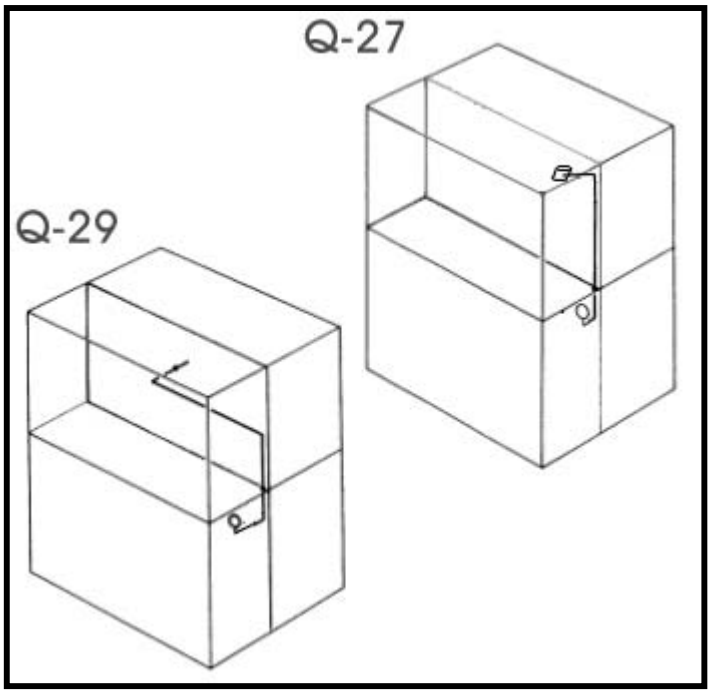

19. Install the spoiler housing.

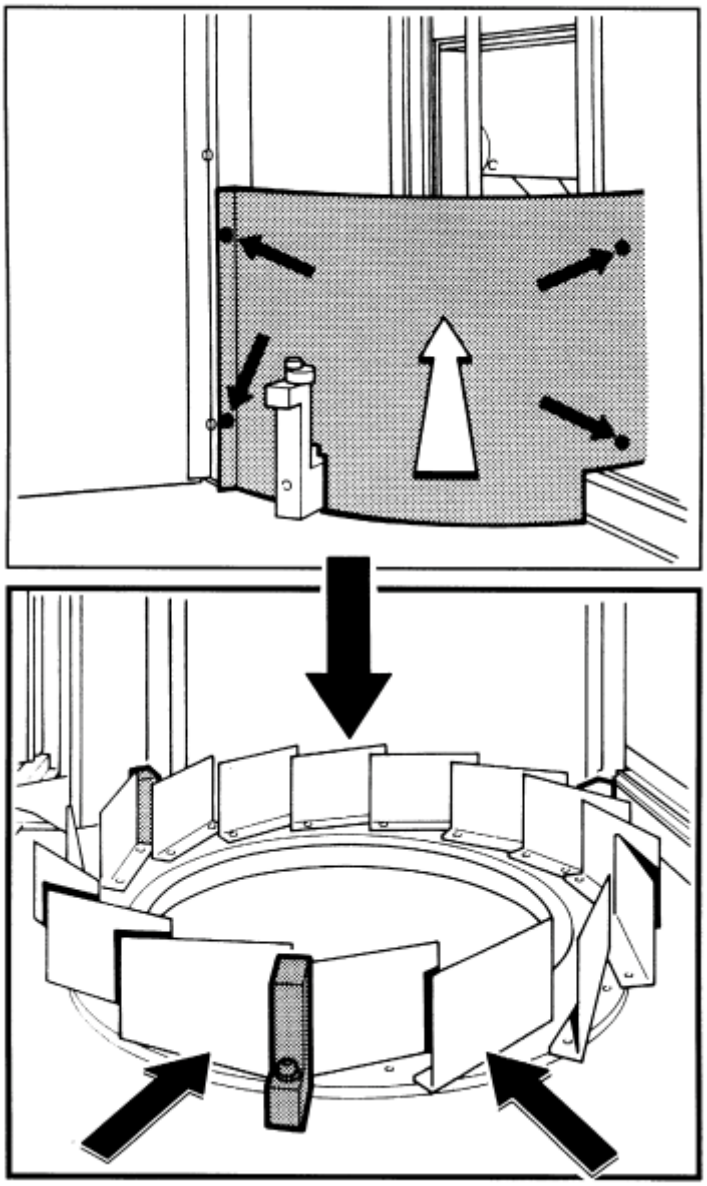

20. Position the turbine, centering it between the 3 supports (see figure for correct blade rotation direction with respect to the 2 stations).

blade rotation

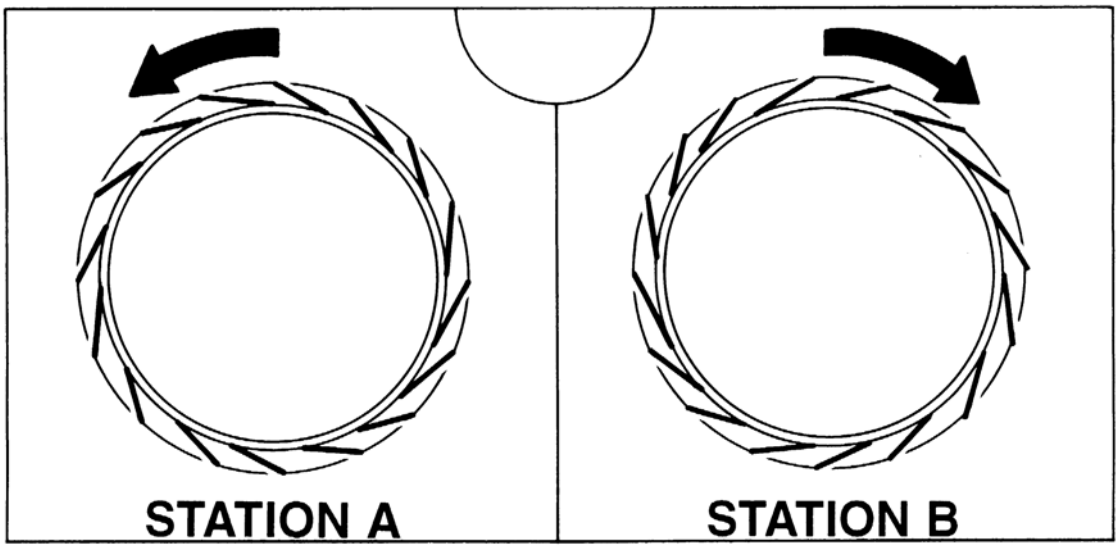

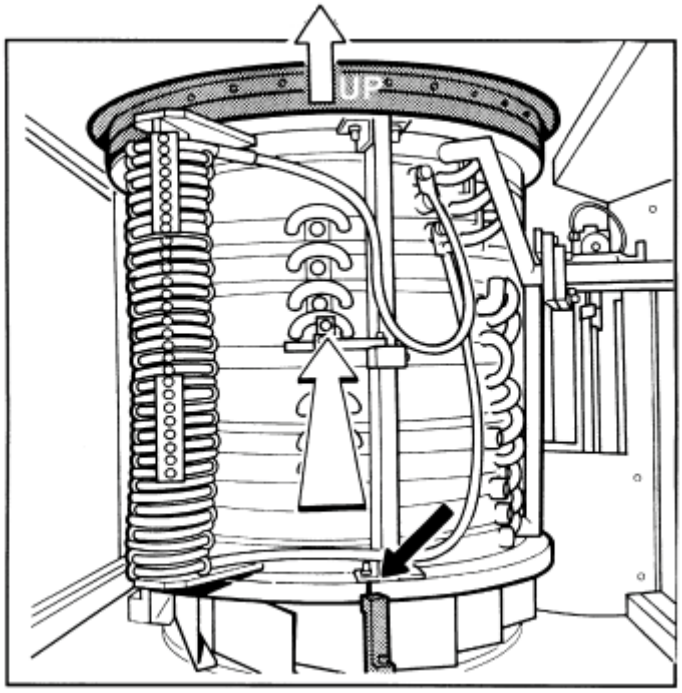

21. Sliding the inductor coil on the 3 supports, position it by turning it and pushing it against the 2 innermost supports.

WARNING

KEEP THE FLANGED MARKED "UP" IN THAT POSITION. HANDLE THE INDUCTANCE WITH MAX. CAUTION

Locate the reference line, marked on the lower flange, at the external support.

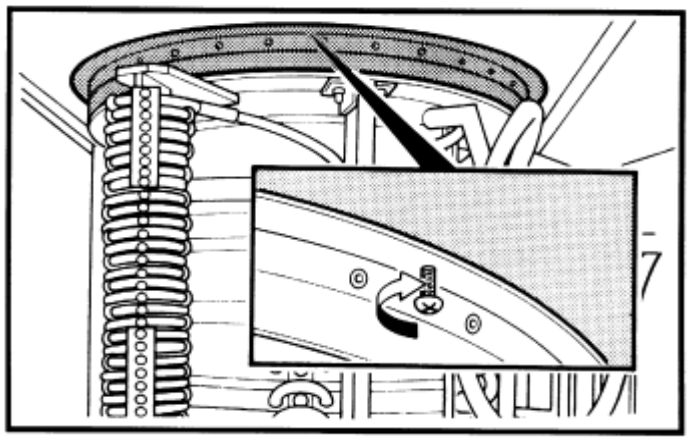

WARNING

MAKE SURE THAT THE RELEVANT INDUCTANCE IS LOCATED AT POINT 1-3 WITH 4 SHORT CIRCUITS.
THE REMAINING SHORT CIRCUIT CONNECTIONS MUST BE ISOLATED.

ALSO ENSURE THAT NO METAL OR INDUCTANCE PART COMES INTO CONTACT WITH THE INDUCTOR.

22. Re-locate the Teflon ring securing the inductor coil.

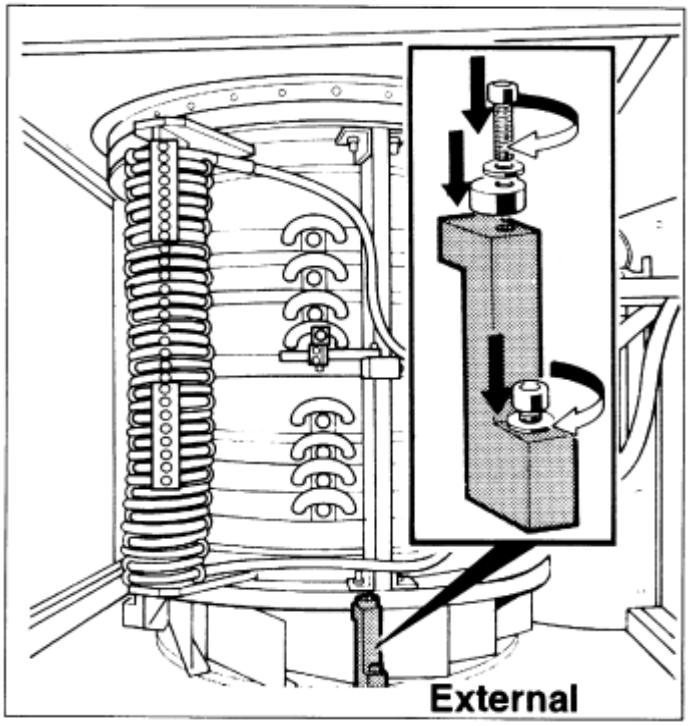

23. Tighten the securing screws of the external support and replace the eccentric making it adhere to the lower ring of the inductor coil.

Repeat on station **B** the operations described for station **A.**

CONDENSER INSTALLATION

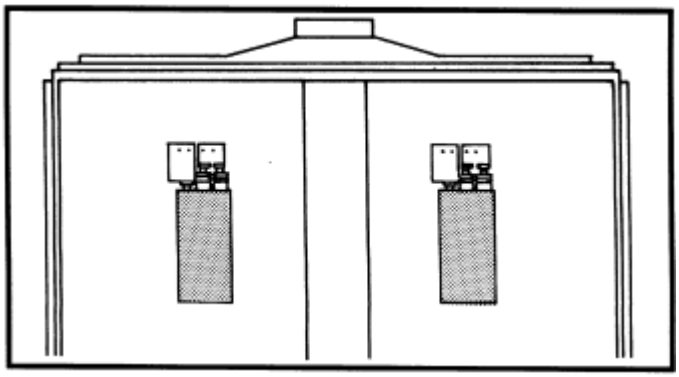

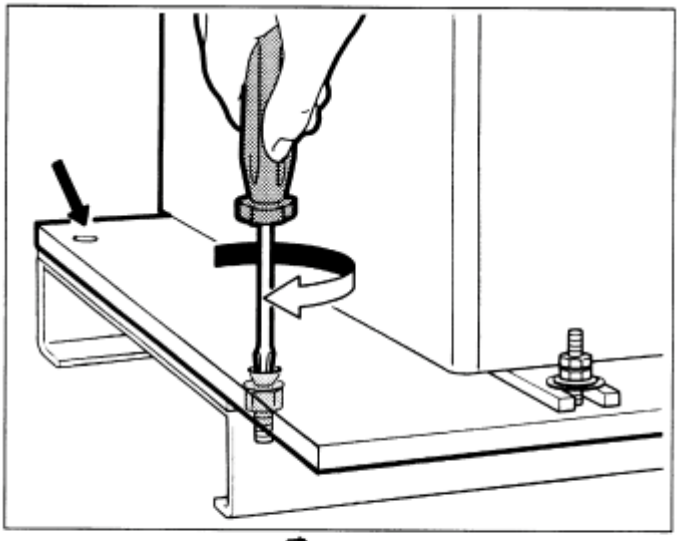

24. Position the condenser of station A and B on their supports.

> **Note:** To position the condensers, use the inductor coil connecting blocks.

Secure the manifolds between the condensers and **DO NOT FORGET TO MOUNT THE O-RINGS.**

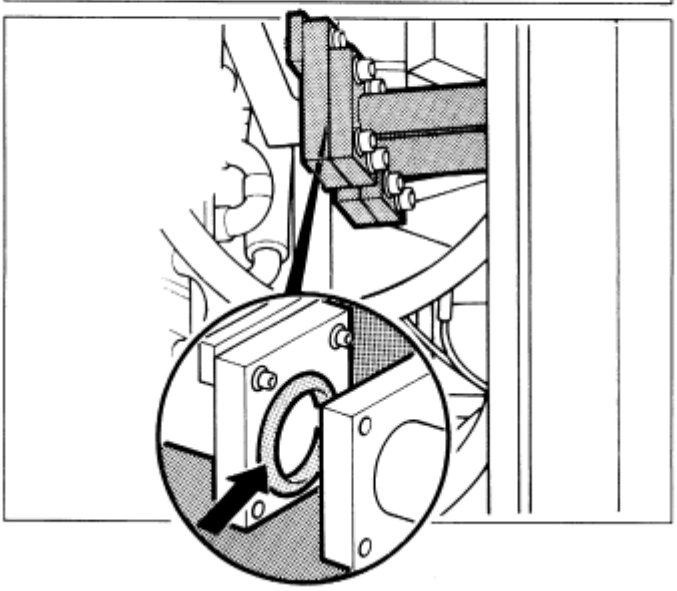

INSTALLING CAPS ON THE 2 STATIONS

Note :
These instructions apply only to caps with quartz tubes.
Working on a bench, unscrew the ring-nut supporting the tubes, and make sure the O-rings are fitted correctly in their seats.

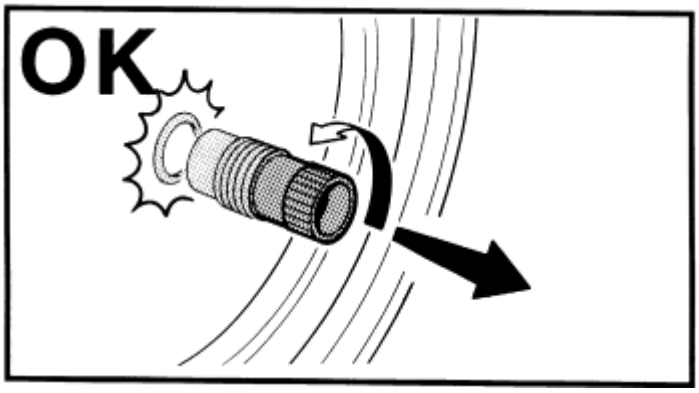

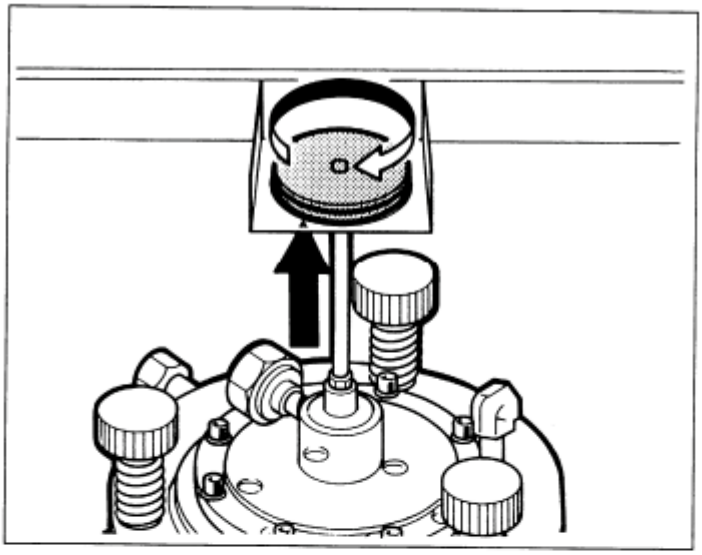

25. Screw the threaded bar on the cap support seat and tighten with the nut.

26. Fit the threaded bar in the hole of the cap support plate and screw the brass support on the threaded bar so that the cap is suspended.

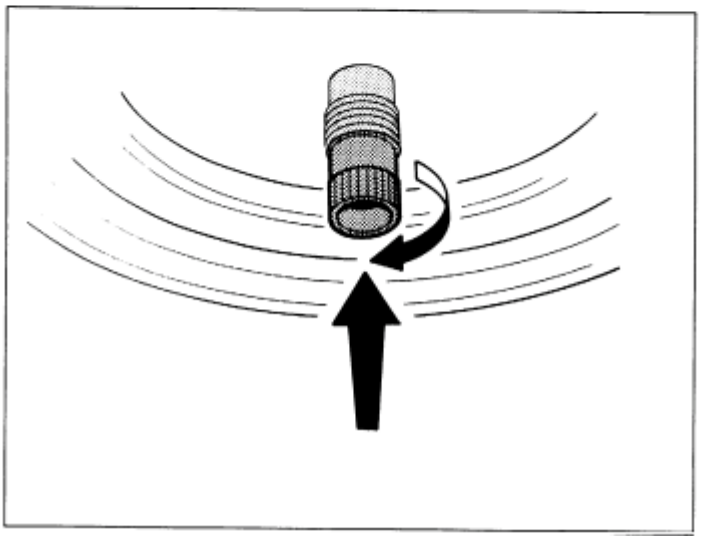

27. Screw the tubes support ring-nut (if using a cap with quartz tubes).

TUBING INITIAL CONNECTION

28. Connect the following set of tubes:

a. 4 water induction tubes on the manifold unions (2 for station **A** and 2 for station **B**).

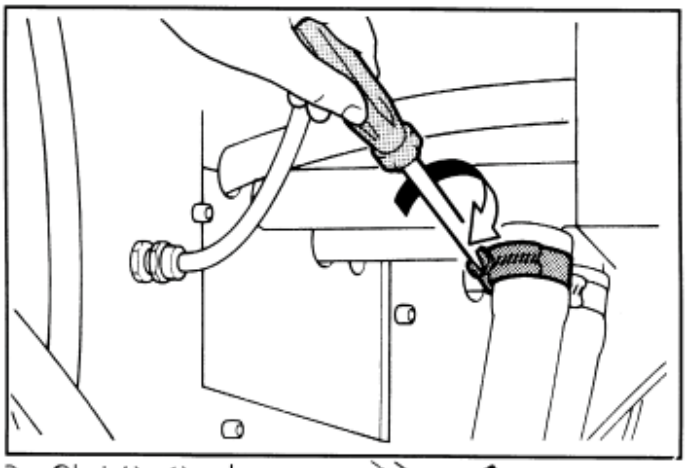

b. 4 condenser water tubes (2 for station **A** and 2 for station **B**).

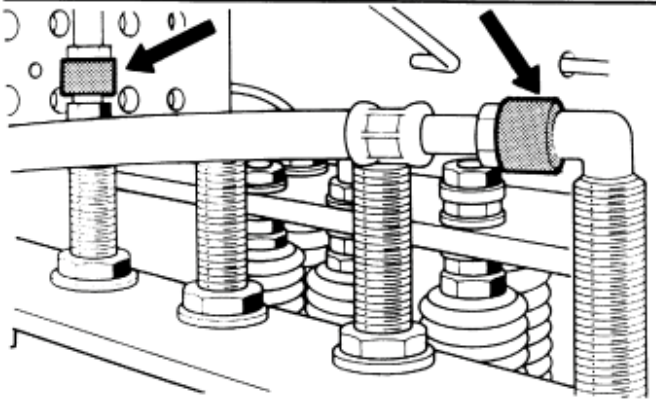

c. 4 inductance water tubes (2 for station **A** and 2 for station **B**).

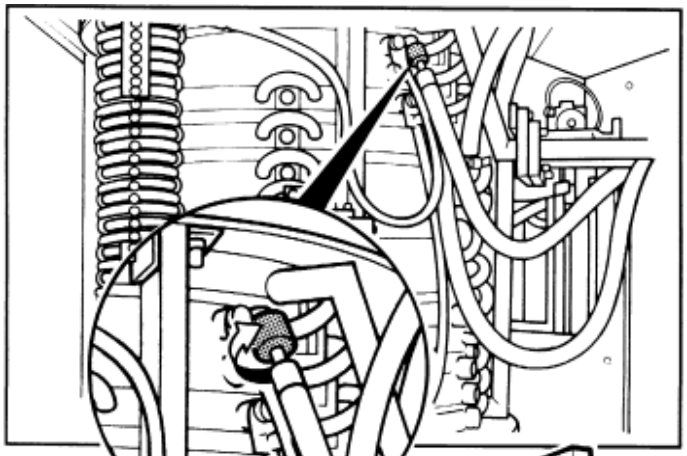

d.

Note:
Now, fit the Teflon protective plugs.

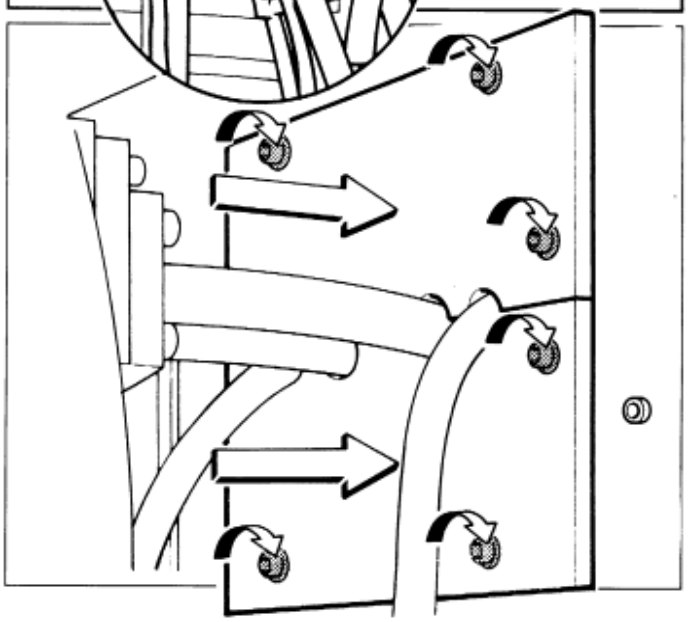

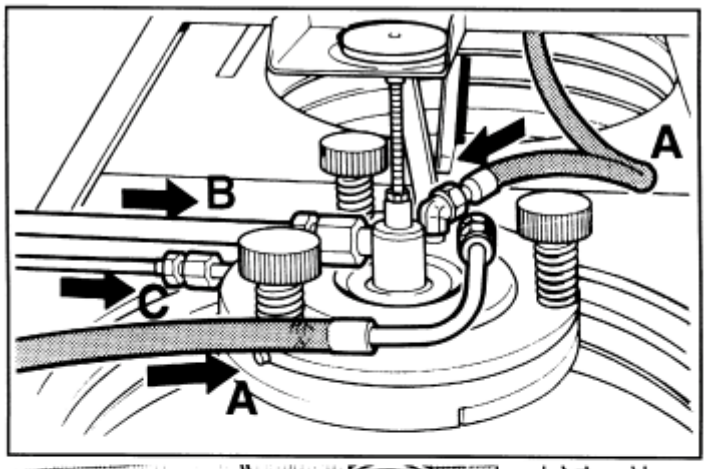

e. 3 water tubes for the caps **(A).**

Connect the gas inlet tube **(B)** on each cap, fitting the VCR GASKET; connect the vacuum test tube **(C)**, fitting the O-ring.

Tighten the two unions **(B and C)** so that the caps are horizontal.

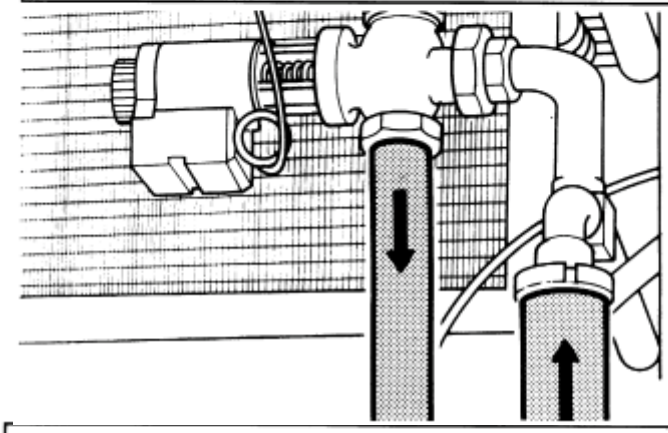

f. 2 tubes to and from the battery, previously secured to the inlet manifold.

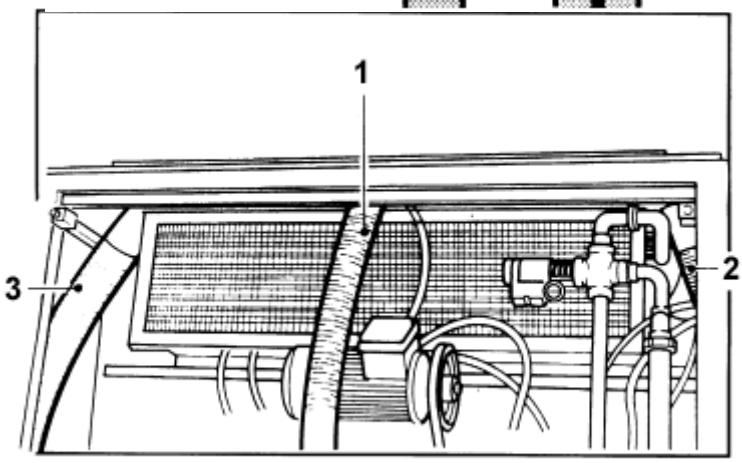

g. Tubes supplying suction to the GAS METERING housing **(1)** and to stations **A** and **B (2 and 3).**

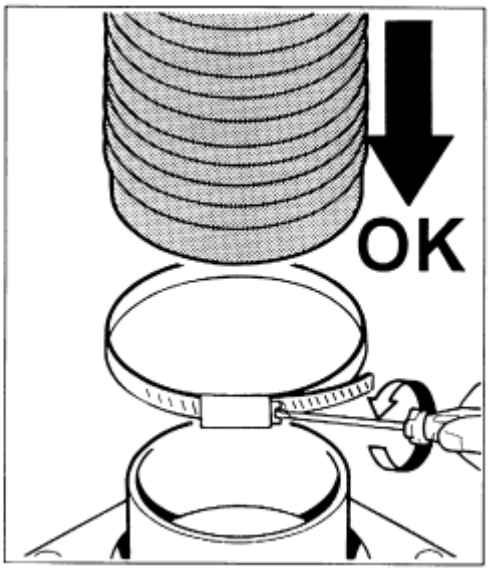

⚠ CAUTION

MAKE SURE THAT THE GRIPPERS FOR TUBES AND OTHER UNIONS ARE TIGHTENED PROPERLY.

h. Connect unions to bell-jar tubes.

Note:
Remember to take off protection caps and to insert VCR gaskets into the rotation group inlet tubes.

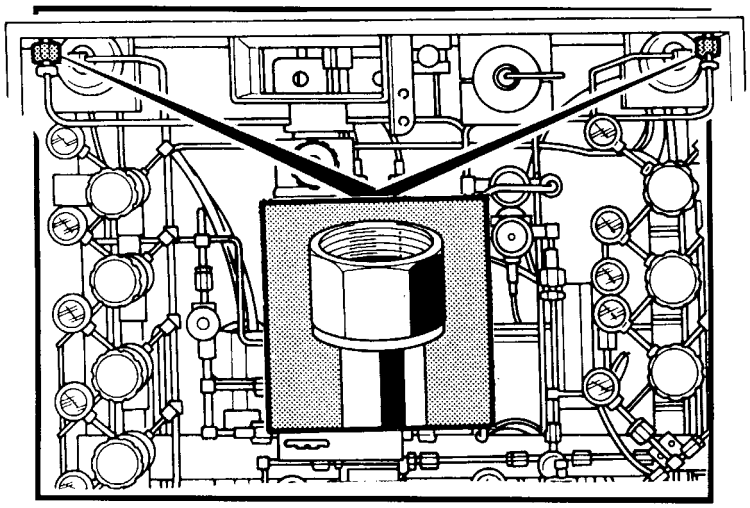

ELECTRICAL CONNECTIONS INSIDE THE REACTOR:

29. Connect the hydrogen sensor as per the "Schematic Wiring Machine" Manual

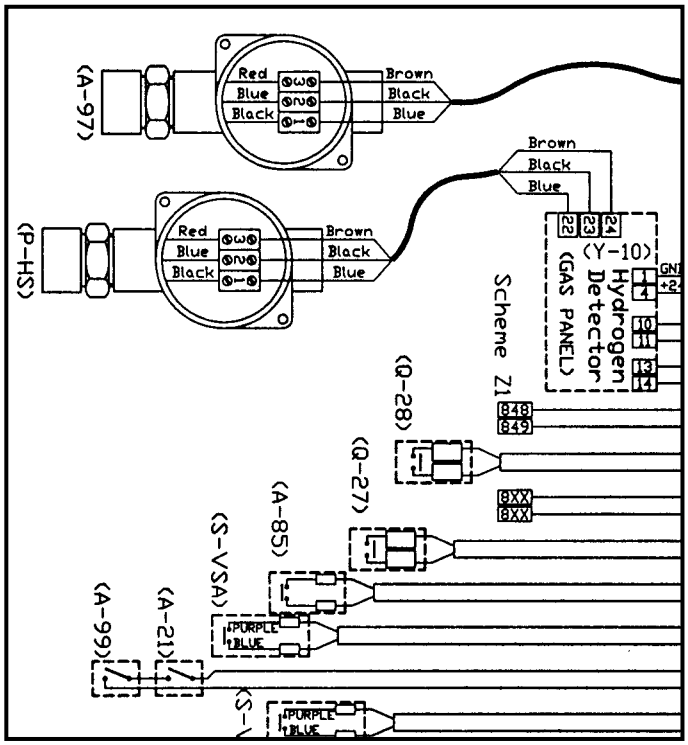

WARNING

DO NOT POWER UP THE REACTOR BEFORE CONNECTING THE SENSOR.

Note: This sketch is just as an indication.
Always refer to the reactor "Schematic Wiring Machine" Manual

30. Route the fan cable through the raceways in zone **Z,** as per drawing **R** and connect it to the motor protector QM126D

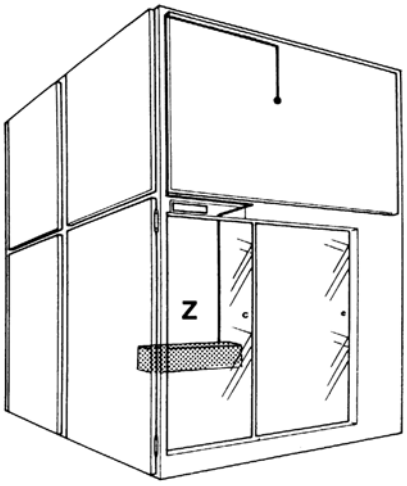

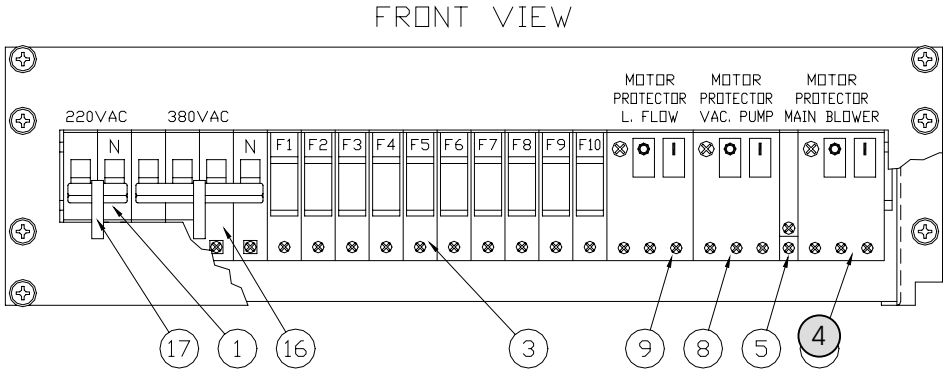

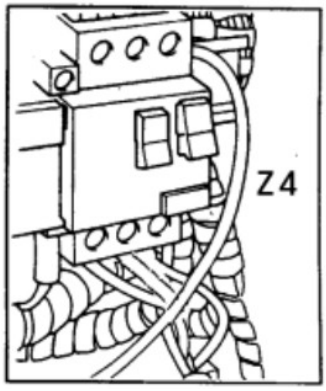

group Z

31. Connect the wires of the upper and lower station of Reactor, to the terminal board into the box A-105. To connect them, follow the diagram **RH4310** and the cable numeration.

32. Route the signal cables of the **SCRUBBER** and **BUBBLER,** through the cable grippers located on the roof of the upper station. Connect them, to the terminal board into the box **A-105** , following the drawing **RH4310**.

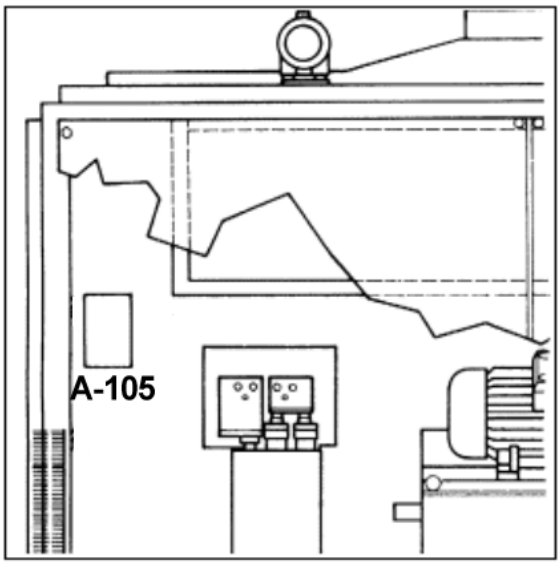

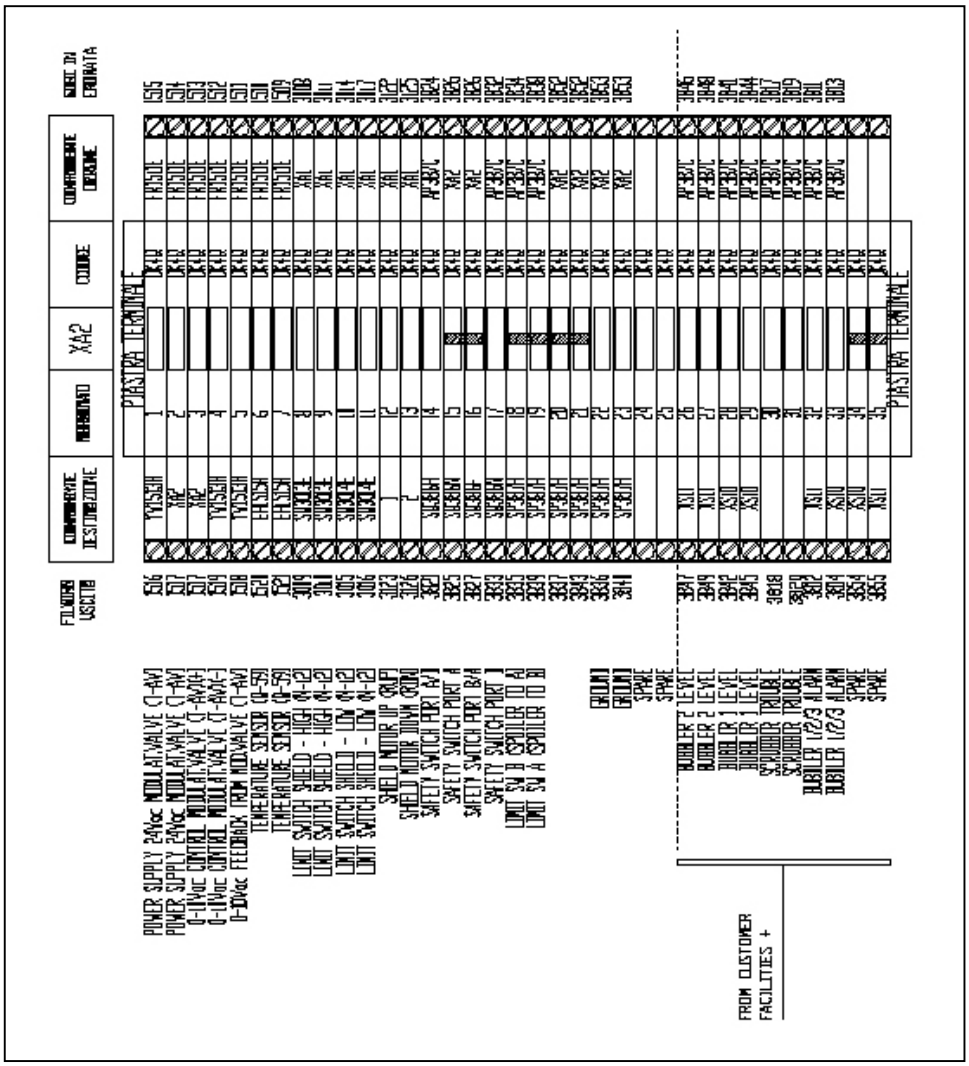

Note: This sketch is just as an indication.
Always refer to the reactor "Schematic Wiring Machine" Manual

33. Connect the BUBBLER cable to the level probe connector of the BUBBLER according to the foll

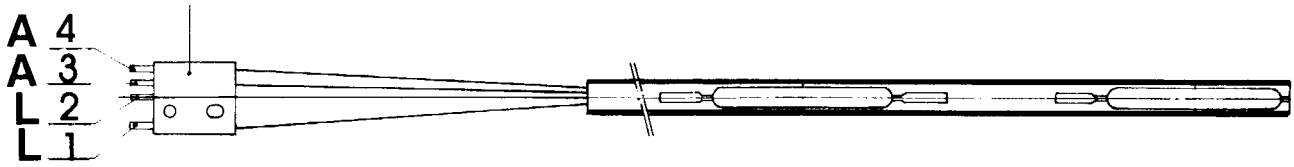

POSSIBLE CONFIGURATIONS

Connections

1	2	3	4	
C		C		**LOW LEVEL OR EMPTY BUBBLER**
O		C		**NORMAL FILLING LEVEL**
O		O		**EXCESS LEVEL = ALARM**

Legend:

C = closed **O** = open

34. Connect the **EMERGENCY STOP** push-button located on the machine front panel (clean room side) using cable **501 (RH4828E2).**

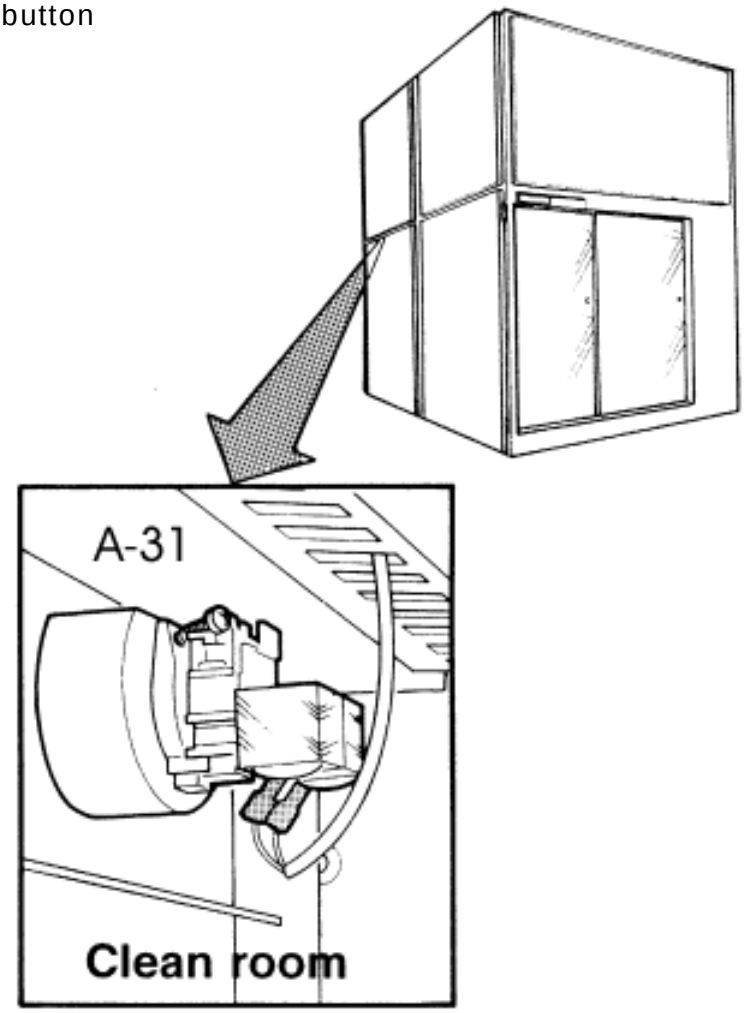

Note: This sketch is just as an indication. Always refer to the reactor "Schematic Wiring Machine" Manual

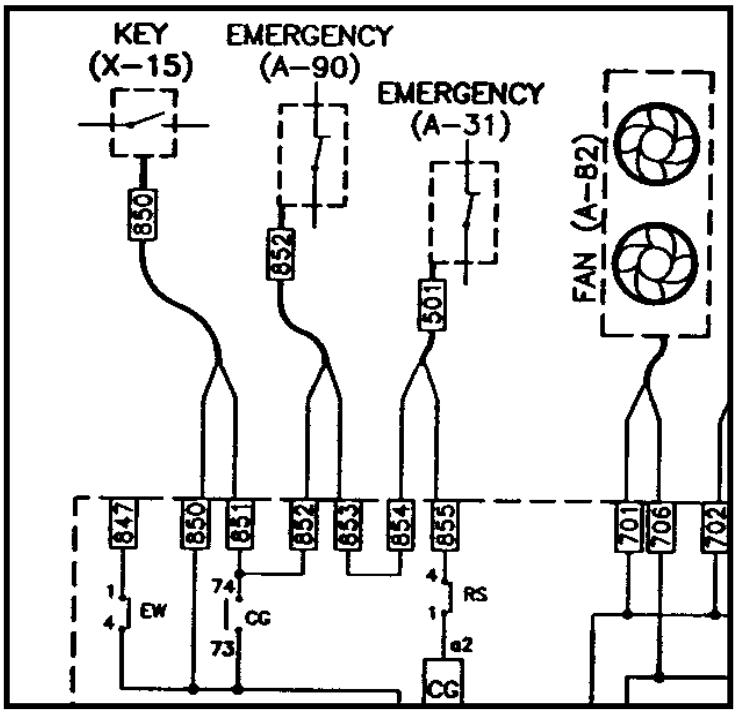

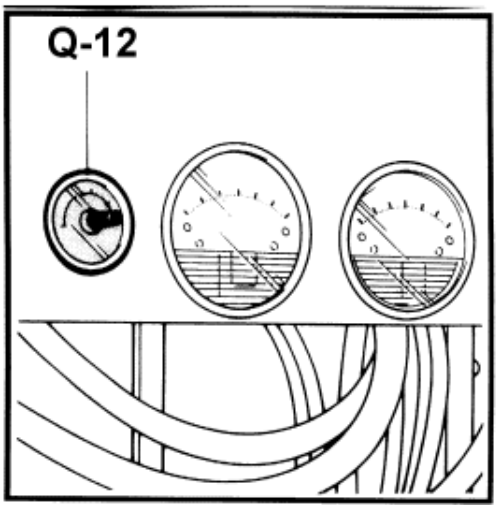

35. Make sure that cable (**114**) **AIR THERMAL SWITCH** (**Q12**) is securely connected.

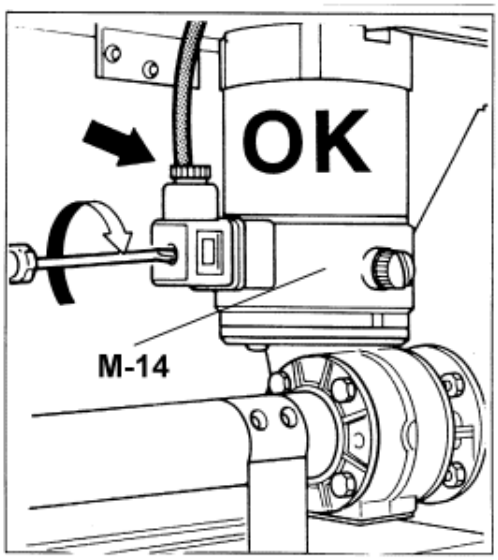

36. Check that the motor shield cable (**M14**) is well tight.

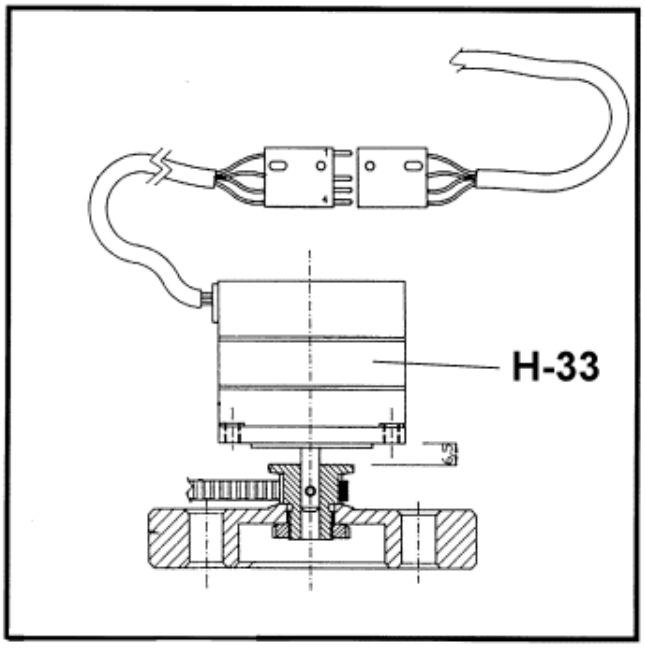

37. Check that the motor fly-wheel group rotation unit connectors **(H-33)** are well tight

38. Connect **the pedals** (**A-41**) to the connectors located on the internal uprights, routing the cables through the raceways located in the lateral internal panels of the frame.

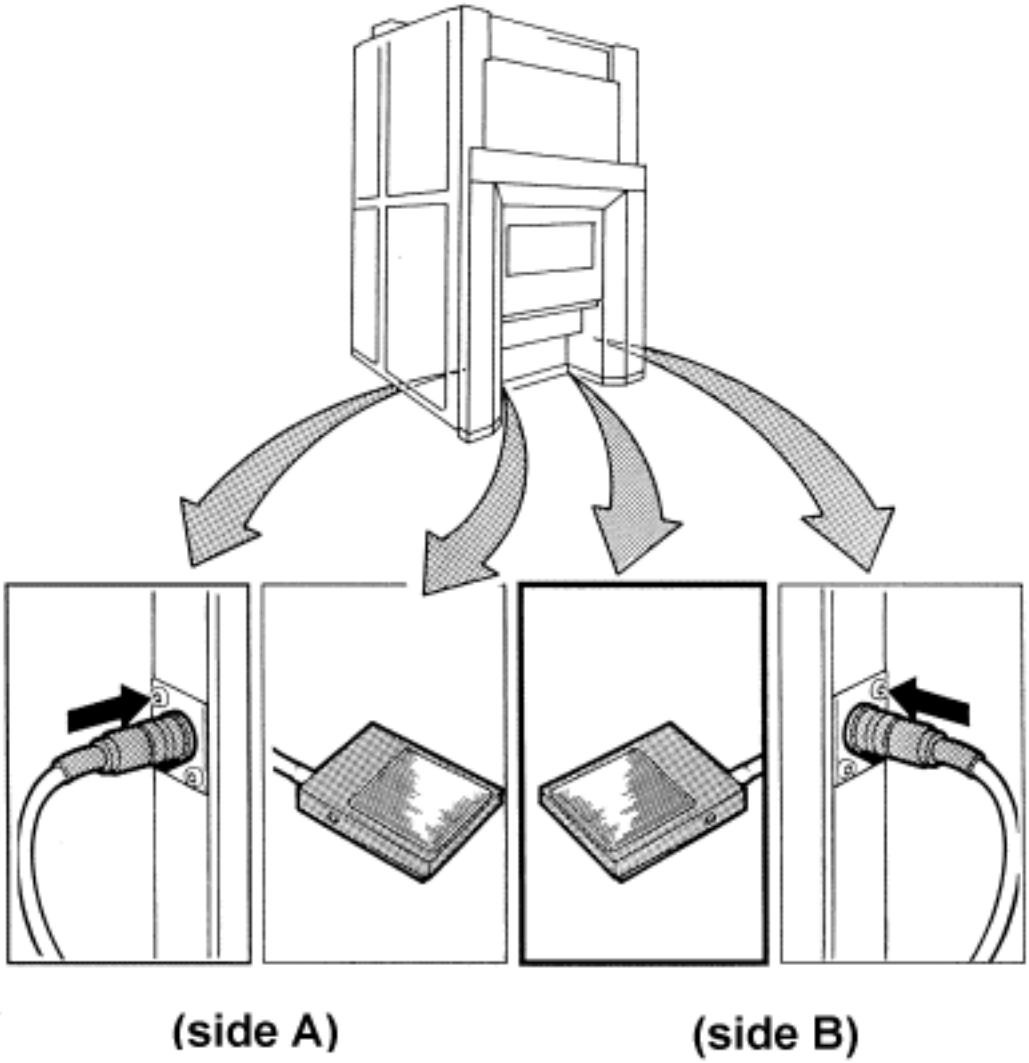

LOCATING THE POWER GENERATOR

39. To transport the power generator, use ropes or means of transport suitable for its weight.

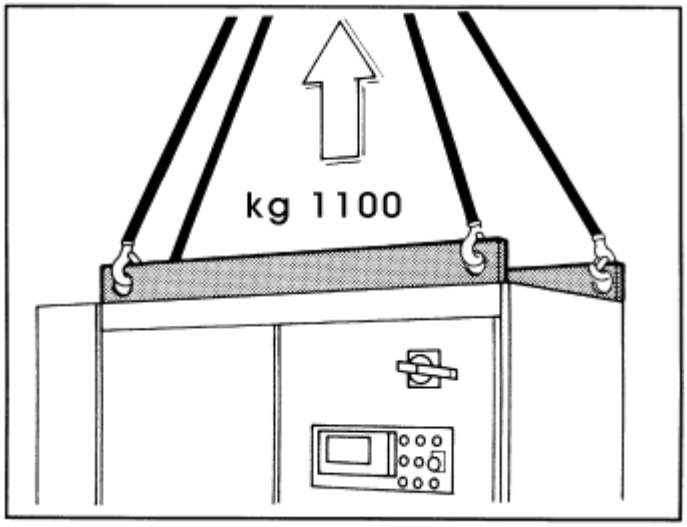

40. We advise you to locate the power generator on the floor or on 3 cross-beams, positioned under the cabinet uprights.

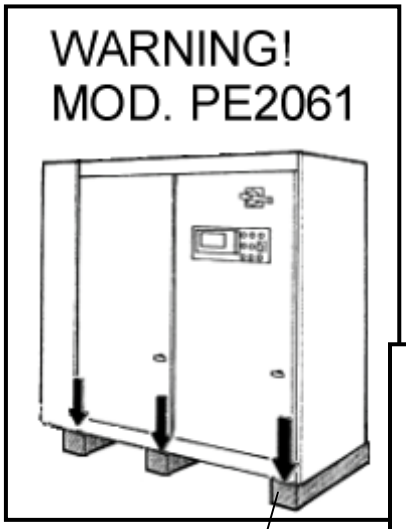

Support on 3 beams
100 x 100 x 750 mm each
(3,94" x 3,94" x 29,53")
Total load: 1,100 Kg (2425 lb)

The maximum distance (**A**) from the reactor must be such that length of coaxial cables does not exceed **15 m**.(33")

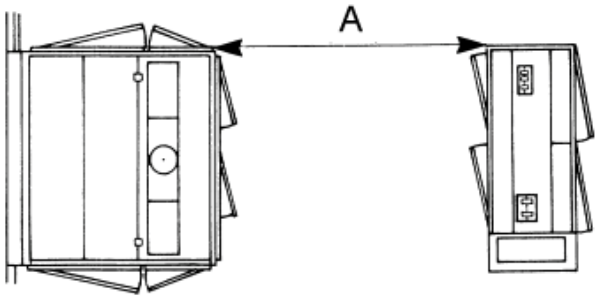

FORMING COAXIAL CABLES

41. Coaxial cables must be routed through enclosed ventilated metal raceways grounded at the two ends.

COAXIAL CABLE:

Weight: 2.3 Kg/linear meter

Ø : 35 mm

Curve minimum radius: < 350 mm

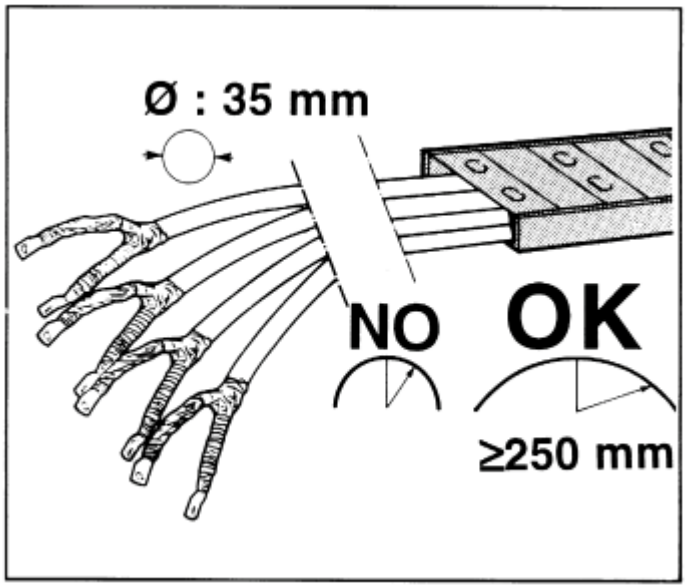

42. The entry point of coaxial cables into the reactor and generator is shown in LAY-OUT drawing.

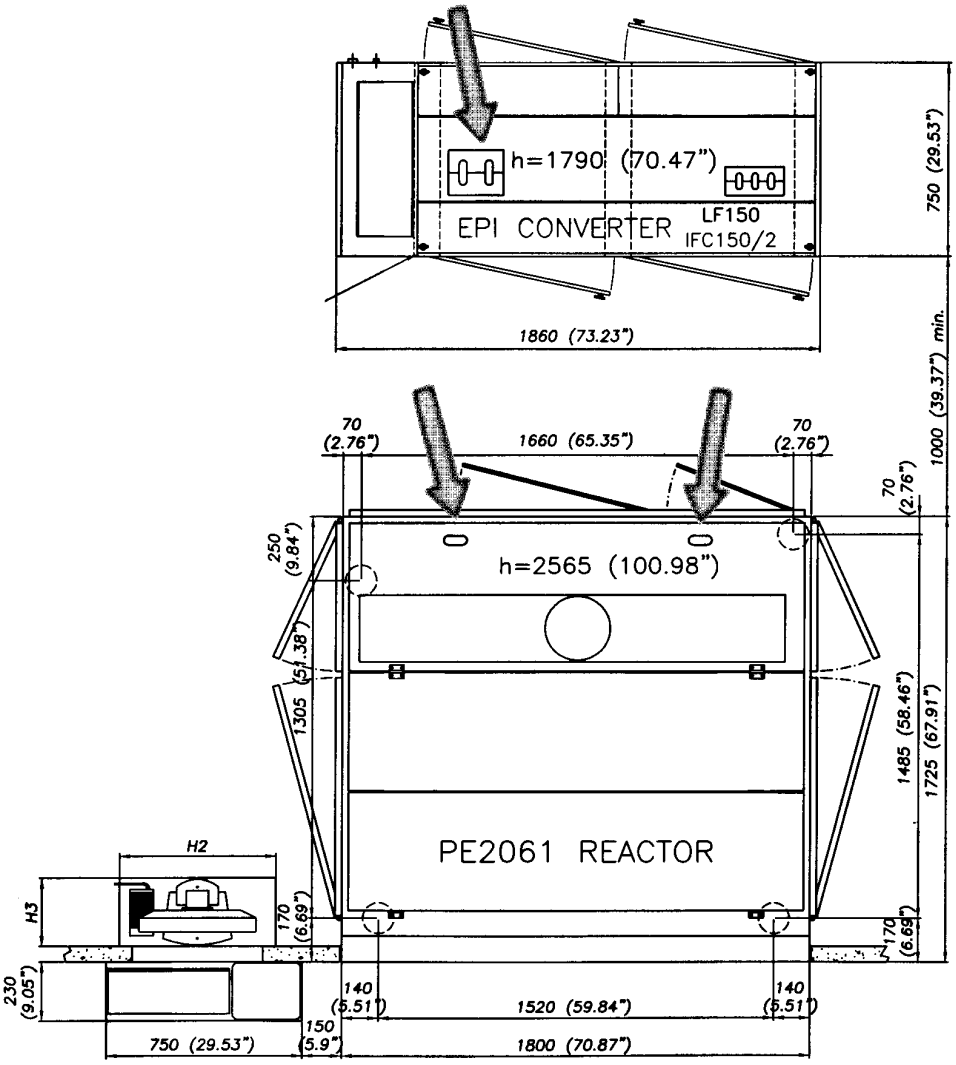

- **EPIREACTOR SIDE**

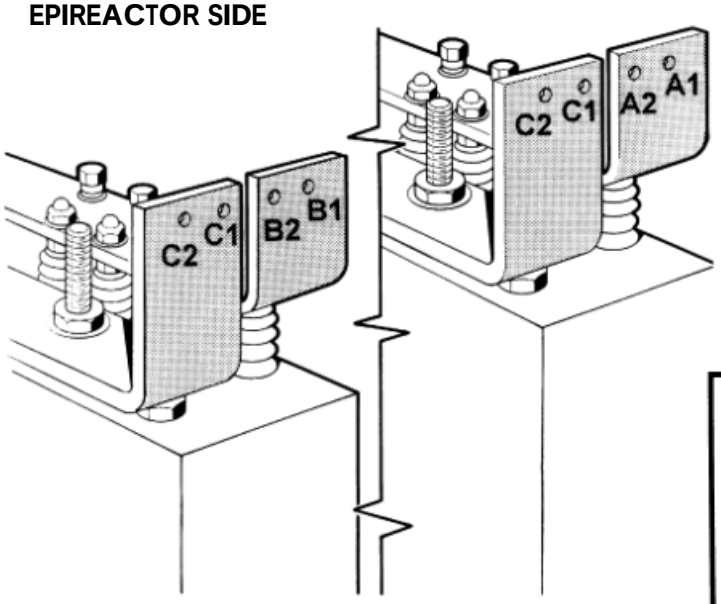

To facilitate connection of coaxial cables to the capacitor plates, identification cables matching those on the coaxial cables, have been affixed.

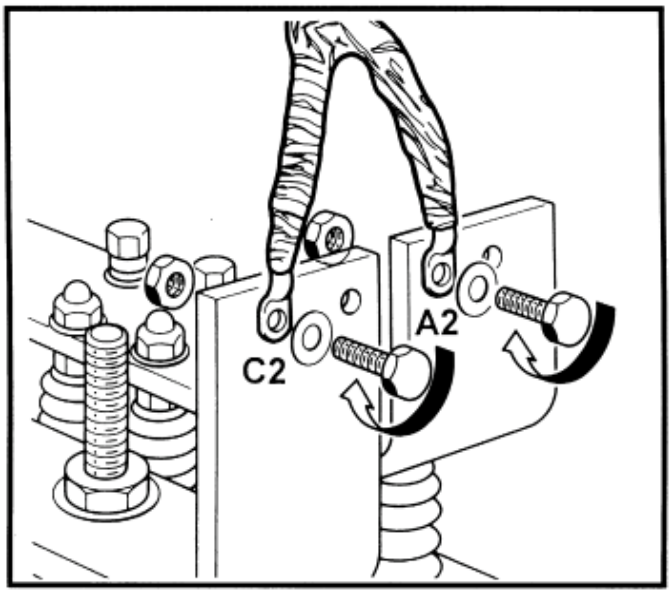

Begin with station **A** coaxial cables (they are shorter) and connect them to the plates as shown in the figure.

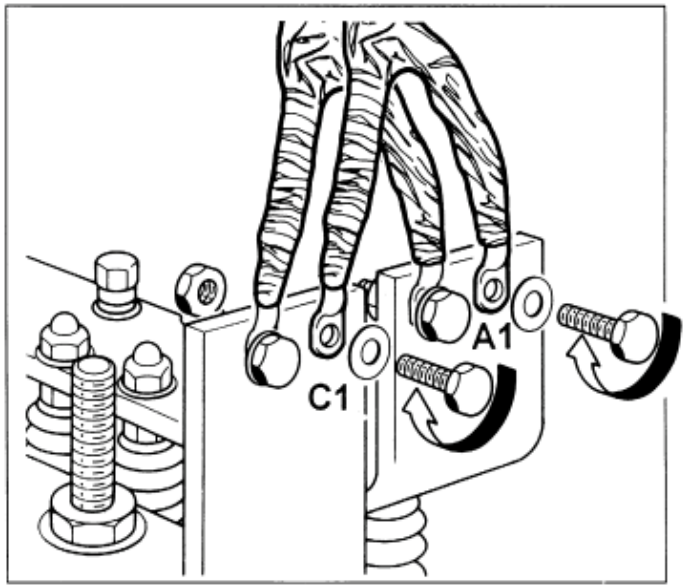

WARNING

ONLY FOR PE2061S

To keep the EMI Conformity valid, the coaxial screened cable must be used.

Connect the screen to ground in the upper PE point.

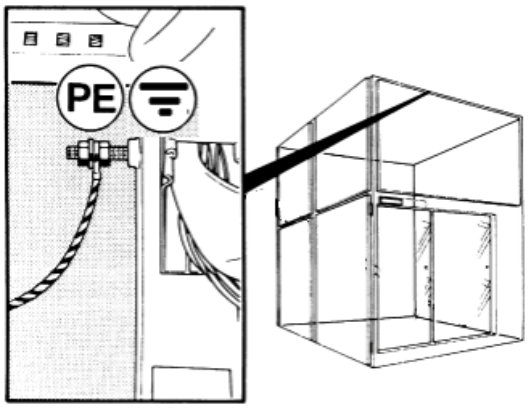

N.B.: The torque moment value for coaxial cables should be 15 Nm with a M10 screw pitch. The screws are AISI 316 Type.

- **EPICONVERTER SIDE**

Run the cables through the appropriate raceway, and make them enter the generator from above through the entrance point near the copper plates.

WARNING

ONLY FOR PE2061

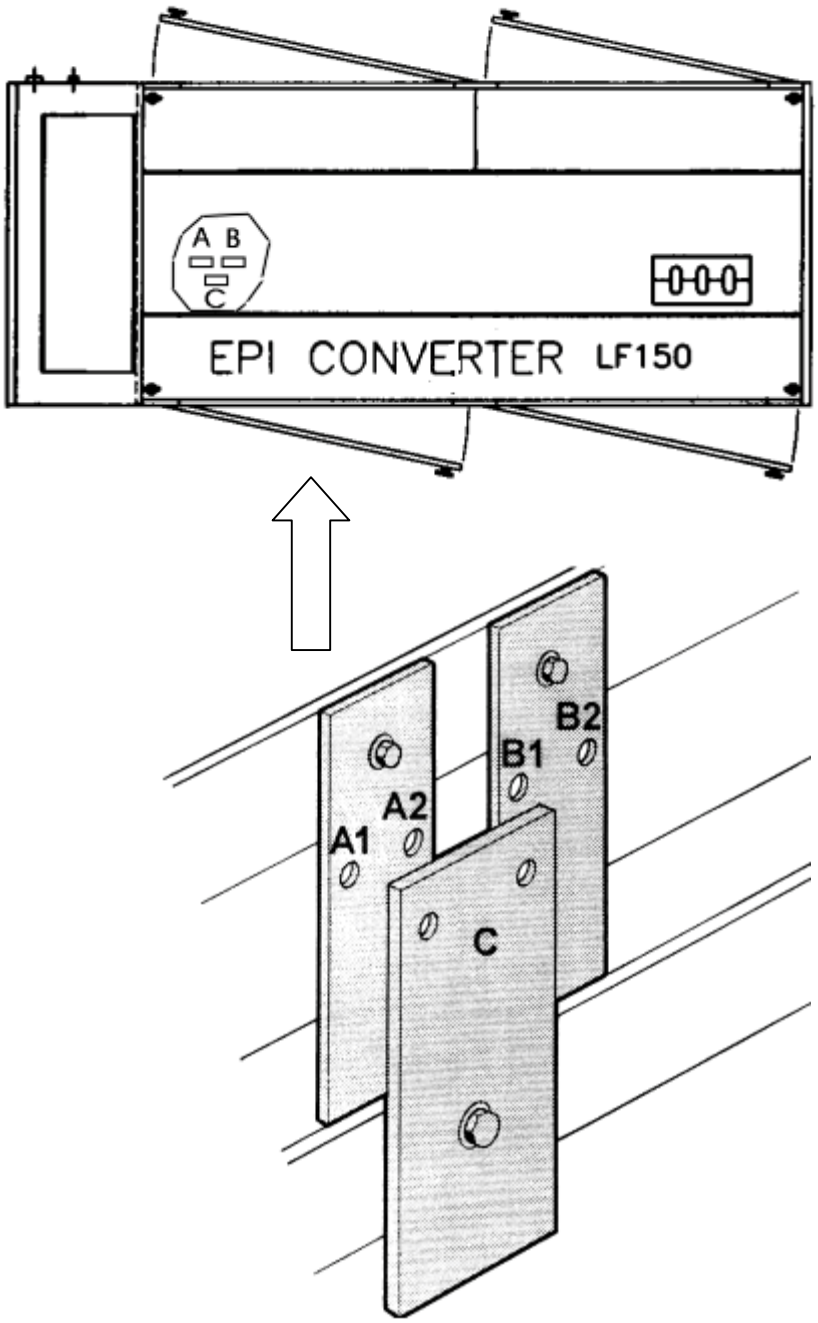

Cut cables **A2** to a length **50 cm** longer than point **C.**

Strip upward cable **A2 6 cm** further than connection **A2.**

WARNING

TAKE GREAT CARE NOT TO CUT WIRES INSIDE THE SHEATH.

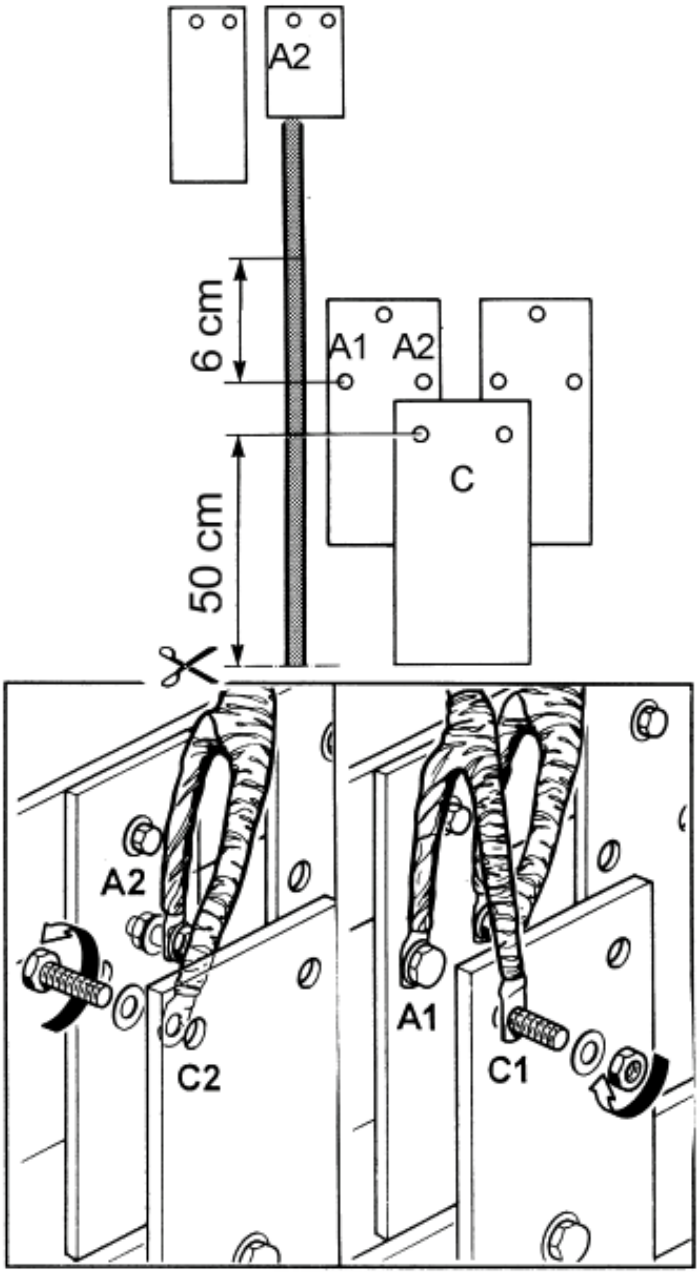

Gather up loose wires and braid them ensuring that the starting point of the braid is at the front to facilitate connection to **C.**

Take the core of cable **A2** and located it in the direction of connection **A2.** Establish the cutting point, press the terminal end with pliers, and tape the contact point.

Secure terminal **A2** without tightening fully.

Pick up the braid and direct it to **C2**. Cut to size and press the appropriate terminal with pliers.

Release **A2**, enclose it in the supplied sheath, and tape the entire section with self-binding material. Secure the terminals at the designated point.

Repeat the above operations for **A1, B1** and **B2.**

WARNING

RECONNECT THE CABLE PLATES BOTH FROM THE REACTOR AND TO THE GENERATOR.

N.B.: The torque moment value for phase cables should be 15 Nm with a M10 screw pitch. The screws are AISI 316 Type.

WARNING

ONLY FOR PE2061S

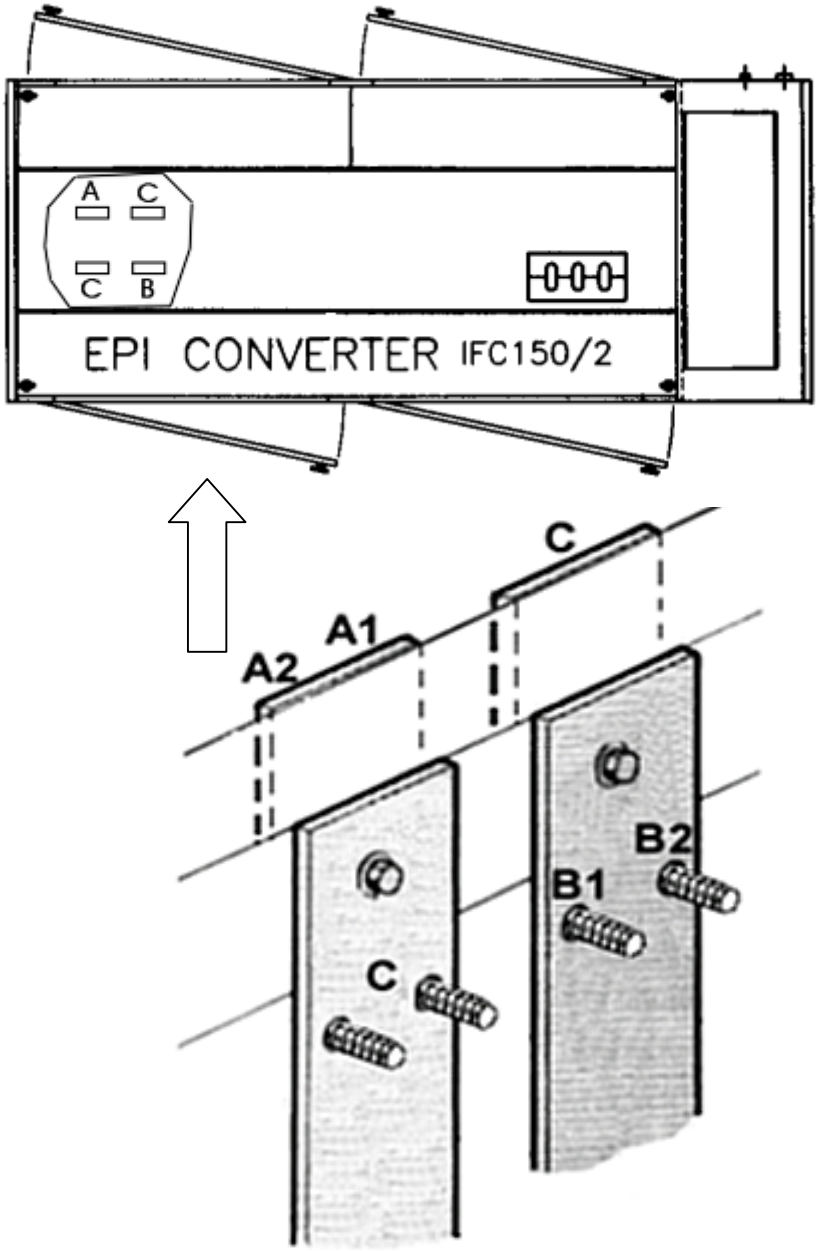

Cut cables **A1** to a length **40 cm** longer than point **C.**

Strip upward cable **A1 8 cm** further than connection **A1.**

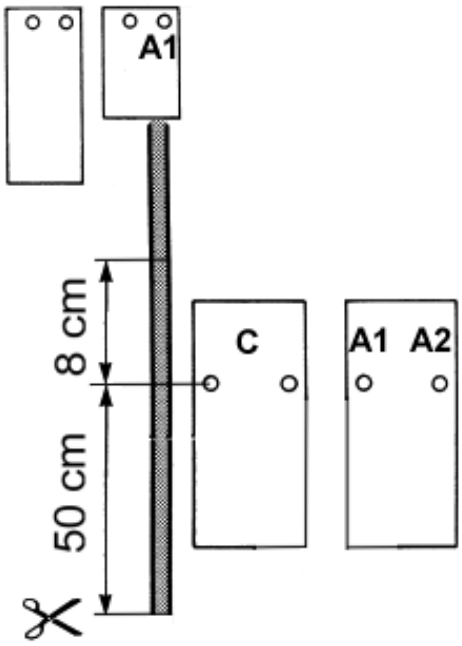

WARNING

TAKE GREAT CARE NOT TO CUT WIRES INSIDE THE SHEATH.

Gather up loose wires and braid them ensuring that the starting point of the braid is at the front to facilitate connection to **C.**

Take the core of cable **A1** and located it in the direction of connection **A1.** Establish the cutting point, press the terminal end with pliers, and tape the contact point.

Secure terminal **A1** without tightening fully.

Pick up the braid and direct it to **C**. Cut to size and press the appropriate terminal with pliers.

Release **A1**, enclose it in the supplied sheath, and tape the entire section with self-binding material. Secure the terminals at the designated point.

Gather up loose screen wires and braid them.

ATTENTION

To keep the EMI Conformity valid, the coaxial screened cable must be used.

Connect the screen to ground of the Epiconverter reactance.

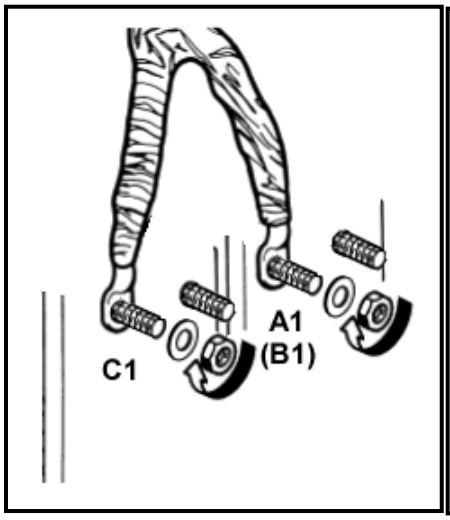

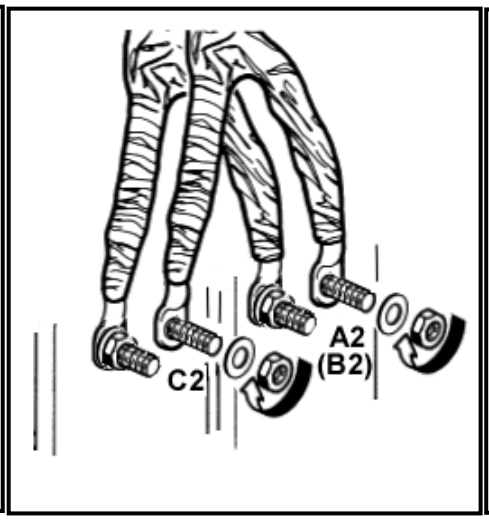

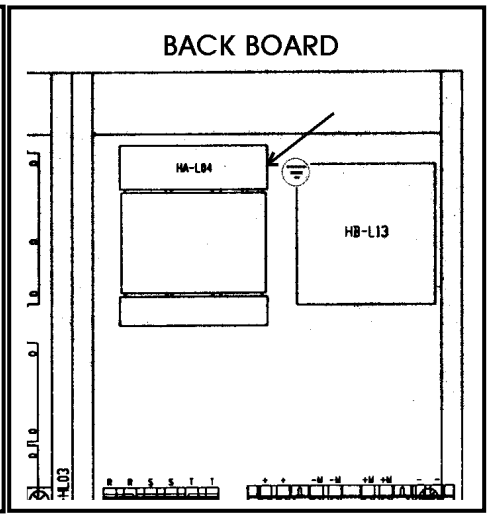

Repeat the above operations for **A2, B1** and **B2.**

WARNING

RECONNECT THE CABLE PLATES BOTH FROM THE REACTOR AND TO THE GENERATOR.

N.B.: The torque moment value for coaxial cables should be 15 Nm with a M10 screw pitch. The screws are AISI 316 Type.

43 Serial line connection Generator-Reactor

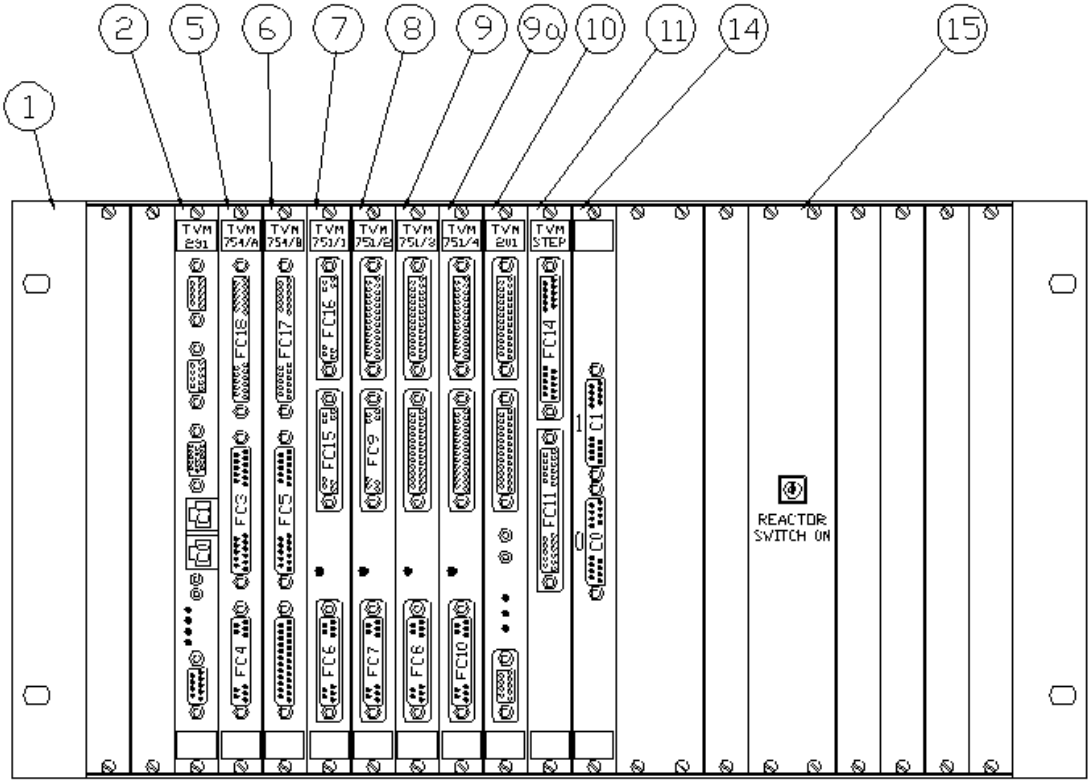

- Connect the serial line screened cable between the generator card **450.3** (on the back side of display - connector **9 pin**) and the reactor card **X14** (connector **J1 - 25 pin**).

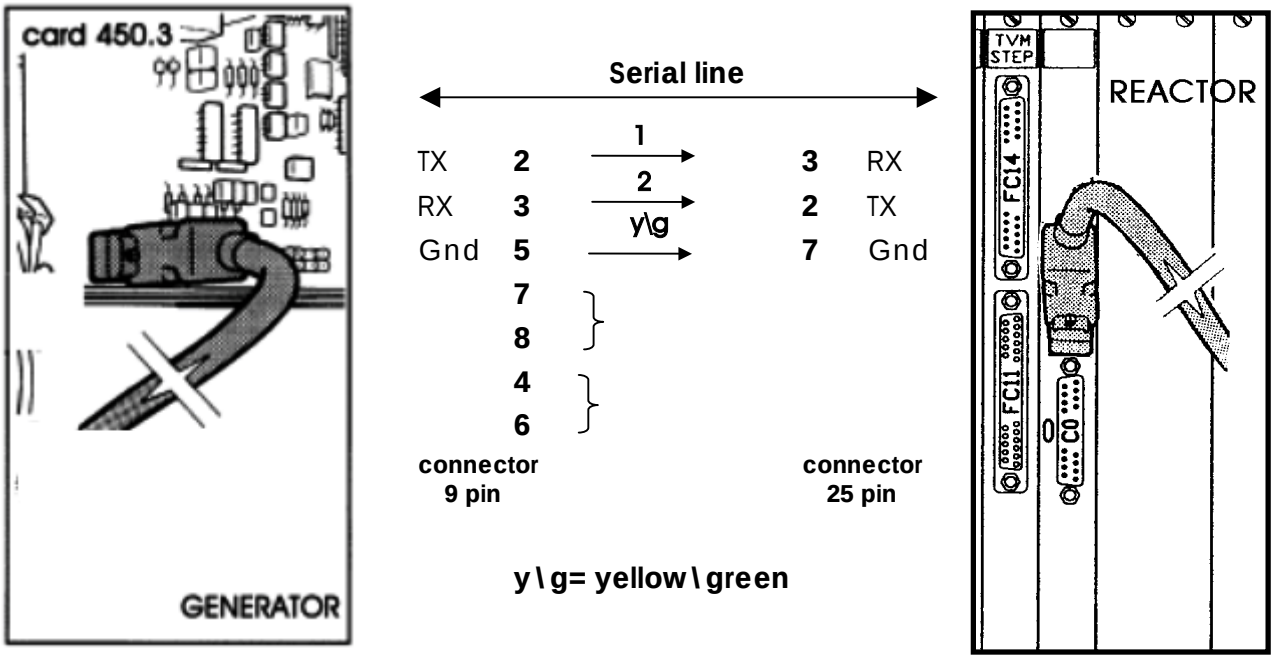

ATTENTION

Connect the screen of the cable at the both ends to the ground, with the grounding clamp (to the ground point on the back of the Reactor electronic rack and on the back of the Converter electronic panel).

N.B.: The torque moment value for ground cables should be 15 Nm with a M10 screw pitch.

44 Serial line connection Workstation-Reactor

- Connect the serial line screened cable between the workstation (**COM1 - connector 9 pin**) and the reactor card **X14** (**connector J0 - 25 pin**).

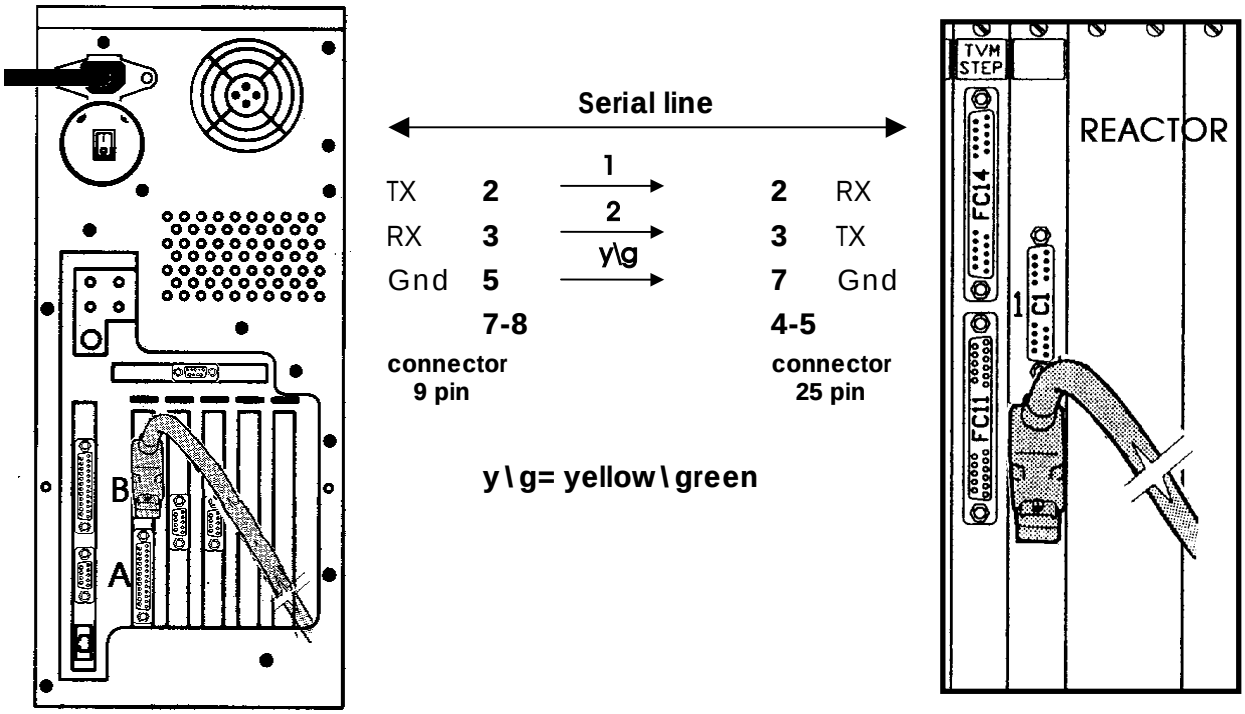

ATTENTION

Connect the screen of the cable at the both ends to the ground, with the grounding clamp (to the ground point on the back of the Reactor electronic rack and on the back of the Workstation case).

45 Emergency line Generator-Reactor

- Connect the quick stop and the emergency cable between the generator socket **XA** and the reactor socket **XA1** and **XA2**.

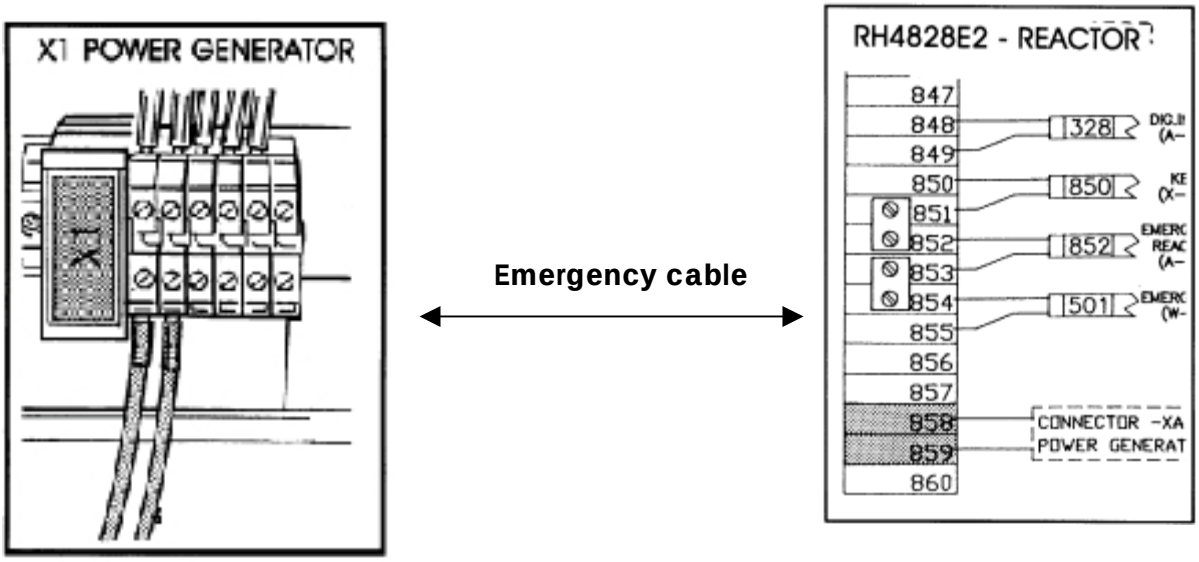

Note: These sketches are just as an indication
Always refer to the reactor and generator "Schematic Wiring Machine" Manuals

46 Line connection Workstation-Monitor

- Connect the cable between the connector on the back of the workstation and the connector on the back of the monitor.

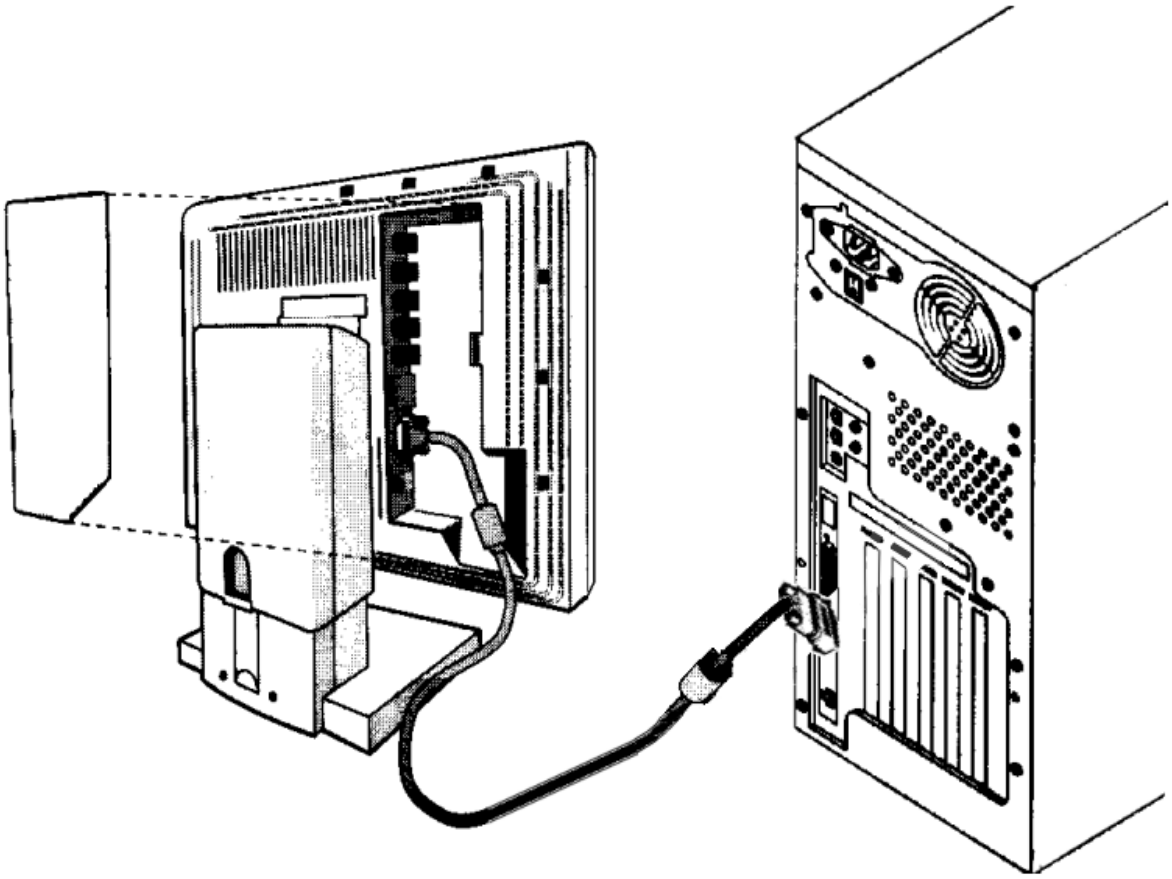

47 Chlorosilane Bubbler saturator

SAFETY INSTRUCTION

The bubbler is a pressurized equipment, in particular the model 14lt is built in accordance with PED Directive. Therefore the user and the maintainer must be a specialized technician, trained and informed, then it is very important to read carefully this Instruction Manual.

For safety reasons, the bubbler must be used between the range of pressure and temperature values, for which it was projected (≤4 bar ; 17÷20 °C).

The system, in operation, contains H2 (flammable and exploding stuff) and chlorosilane that may generate HCl fumes in case of leakage, then the bubbler must be **closed into a scavenged cabinet** of proper size (see dwg. - **The cabinet is NOT PART OF THE SUPPLY**). It is recommended to equip the cabinet with an exhaust system and a leak detector.

It is forbidden the use of free fire in proximity of the bubbler.

During the installation and the maintenance anti-sparkle tools must be used. Safety caution and personal protection media are required in case of disconnection and/or maintenance operation on valve group.

Before the connection of the bubbler, read chapter “Bubbler Pre-Installation”.

If you need more information, please contact LPE Techservice.

PRE-INSTALLATION INSTRUCTIONS

WARNING

BEFORE CONNECTING BUBBLER, READ and FOLLOW the following
PRE-INSTALLATION INSTRUCTION

ALL MODELS

The bubbler and the valves are tested according LPE specification, which includes, as final step, the pressurization with H2 at 6 bar for 24 hours; results are reported in the QC Certification.

For safety, transport and cleanliness reasons, the bubbler is flushed with filtered N2 and pressurized with N2 at approximately 1 bar, shown on the pressure gauge installed on bubbler, then valves are closed and locked with a plastic strip.

Because of temperature change and/or of long storage, the pressure shown at installation may vary +/- 0.25 bar.

Should occur some problem (leakage, damages, improper valve opening, wrong procedure of bubbler connecting), the pressure shown will be out of stated range.

This fact must be immediately reported to LPE, BEFORE CONNECTING the bubbler.

For this, we suggest the following check procedure, just before the installation of bubbler and connection to the lines.

1 - Check the correct tightening of the manometer VCR
2 - Check and mark the pressure shown on pressure gauge
3 - Control that all plastic strips on valves are integer and the bubbler does not show any sign of damage for drops, connections removing or other manipulation
4 - Remove the plastic strip from the valve VBBL connected to the pressure gauge and turn the valve open

5 - Observe the pressure shown and compare with the one at point 1

6 - **Should be either:**

a) the pressure difference over 0.25 bar

b) the bubbler final pressure below 0.4 bar

please inform LPE and DO NOT connect the bubbler to chlorosilane line

7 - If the test is passed, turn the valve close and proceed to connection of lines, removing the pressure gauge and the centerpieces of the 2 other VCR connections.

NOTE: the N2 for delivery pressurization is Research grade, filtered at 0.02 m, nevertheless, is advisable to proceed to a "drying" of bubbler flushing with liquid source nitrogen at 20 slm for 2 hours, before final connection.

ATTENTION

Gaskets installed on the VCR connections to lines are made of nylon, just for delivery purpose and are blind (with out hole) gaskets.
These 3 gaskets **MUST BE DISCARDED AND REPLACED** with the metal gaskets supplied (Cajon model SS-4-VCR-2 or equivalent size)

The not observance of the present procedures, rescinds the guarantee contract.

SAFETY WARNING AND CONNECTION BUBBLER (ref. dwg. RE4196)

The system, in operation, contains H2 (flammable and exploding stuff) and chlorosilane that may generate HCl fumes in case of leakage.

The bubbler must be **closed into a scavenged cabinet** of proper size (see dwg.) in order to allow easy operation of manual valves and sensor.

During the installation and the maintenance anti-sparkle tools must be used. Safety caution and personal protection media are required in case of disconnection and/or maintenance operation on valve group.

The cabinet is NOT PART OF THE SUPPLY.

1. Connect, with orbital welding, the VCR counter pieces supplied with bubbler the 3 tubes for 1) H2 inlet - 2) Mix out - 3) Liquid Chlorosilane supply line.
   Be sure to connect correctly the lines following the position shown on drawings, the connections are also marked on the upper flange of bubbler.
2. Remove the 3 nylon blind gaskets from VCR connectors, place the proper st.st. gaskets (Cajon model SS-4-VCR-2 or equivalent) and tighten properly.

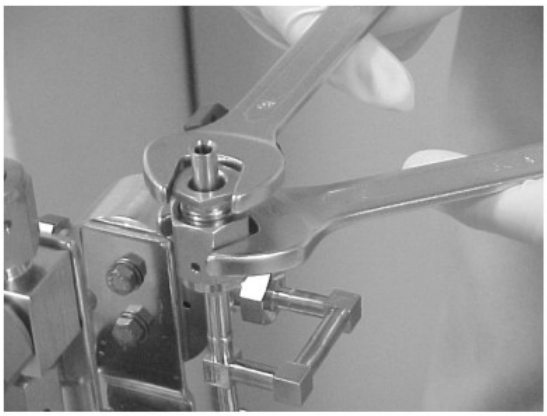

H2 inlet line

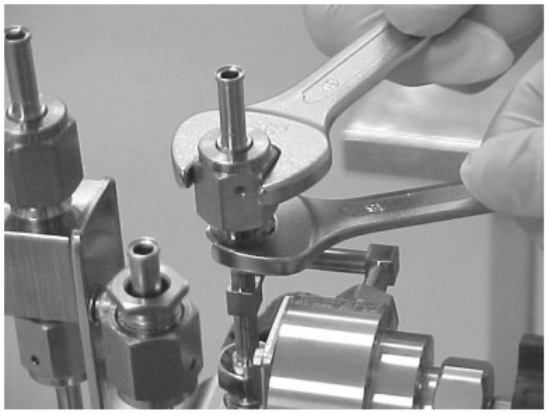

Mix out line

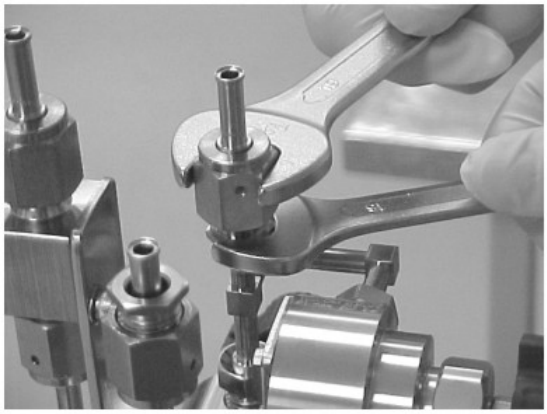

Mix out line

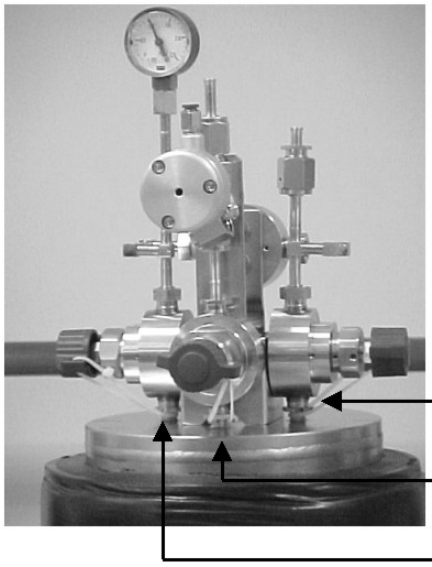

Note: VCR adjusted by LPE. Please do not touch.

3. Check lines and welding for leakage **BEFORE** opening manual valves of bubbler
4. Connect the water supply to the water jacket of bubbler and the drain tube set water flow to 5-10 liters per minute

Note: for first bubbler filling, see **chapter 16** (point 4. BUBBLER PURGING AND FILLING)

48 Light column

Location of the signaling light pole must be decided on by the customer.

Connect the Light Pole cables to the terminal board of the card SZ0092 (dwg. Group Y - pos. Y5)

Note: This sketch is just as an indication.
Always refer to the reactor "Schematic Wiring Machine" Manual

red → 8c
orange → 15c
green → 18c
bleu → 31c

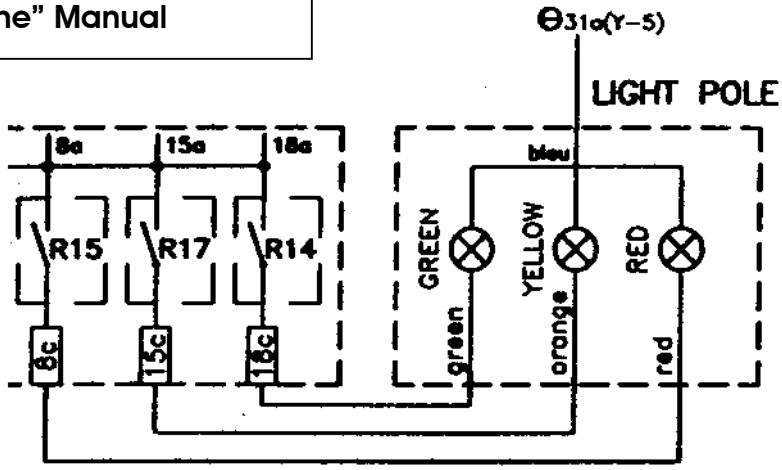

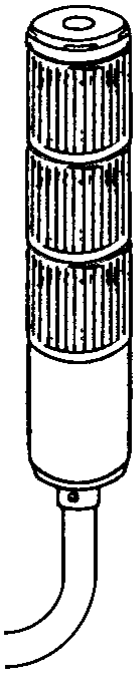

49 Susceptor trolley (optional)

1. Assemble the trolley and the fork. To respect the correct connection, as show in the point A

2. Insert the pivots in the respective seats

3. Rigging the fork plane (see the spirit level - point B) with the screw, as show in the point C

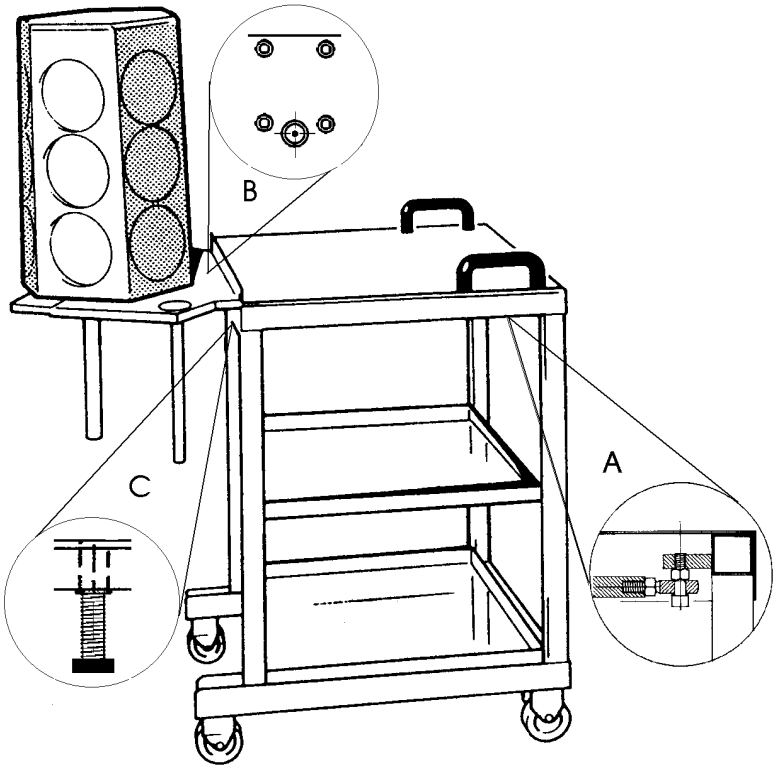

REFERENCE GUIDE TO THE DRAWINGS MENTIONED IN THIS CHAPTER

- **RE4196** — **Chlorosilane Bubbler**
- **RH4276/D** — **Rack VME group**
- **RH4310** — **Connection Box**
- **RH5250.U1** — **PE2061 - Lay out**
- **RH5250.U2** — **PE2061 - Access area**
- **RH5250.U4** — **PE2061 - Water/air exhaust connecting point**
- **RH5250.U5** — **PE2061 - Gas connections**
- **RH5250.U6** — **PE 2061 - Electrical connections**
- **RH5250.U11** — **PE2061S - Lay out**
- **RH5250.U12** — **PE2061S - Access area**
- **RH5250.U14** — **PE2061S - Water/air exhaust connecting point**
- **RH5250.U15** — **PE2061S - Gas connections**
- **RH5250.U16** — **PE 2061S - Electrical connections**
- **RH4634/A** — **Digital input connection card**
- **RH4666U1** — **Winder group**
- **RH4694U1** — **Rack driver/power supply**
- **RH4828E2** — **Terminal board**
- **RH4828U2 - U3 - U4** — **A.C. Power input/drivers**
- **RH5030U1** — **Turn plate and motor-flywheel group**
- **RH5040U2** — **Compr. air inlet distribution**
- **RH5070U1** — **Air group**
- **RH5200U1 - U2 - U4** — **Reactor components/groups**

(THE DRAWINGS ARE AT THE VOLUME 3 - CHAPTER 26)

Introduction

The following chapter indicates all machine danger areas and the devices and measures adopted to eliminate or reduce such dangers.

A. ELECTROCUTION DANGER

A1. General electrical hazard

Reactor and generator modules may contain a circuit using 400/230 V (or other voltages) 3-phase 50 Hz or 60 Hz, circuits using 5 to 60VDC, MF circuits (medium frequency AC) at high wattage and voltage. capacitors in any of these sections may discharge high wattage if shorted. Any of these circuits is a potential source of electric shock and may cause electrocution. Adequate skill, attention and specific training are always required.

⚠ CAUTION

THE MACHINE MUST BE POWERED UP TO "0" BEFORE ACCESSING DANGER AREAS (SE CHAPTER "SAFETY INSTRUCTIONS").

Safety elements:

- correct wire sizing and insulation rating
- fuse/breakers protection
- access doors/panels with exposed voltages at the interior are safety interlocked and require a tool or key to open (keys must be kept by the head of department).
- emergency Power Off switches
- equipment grounding.

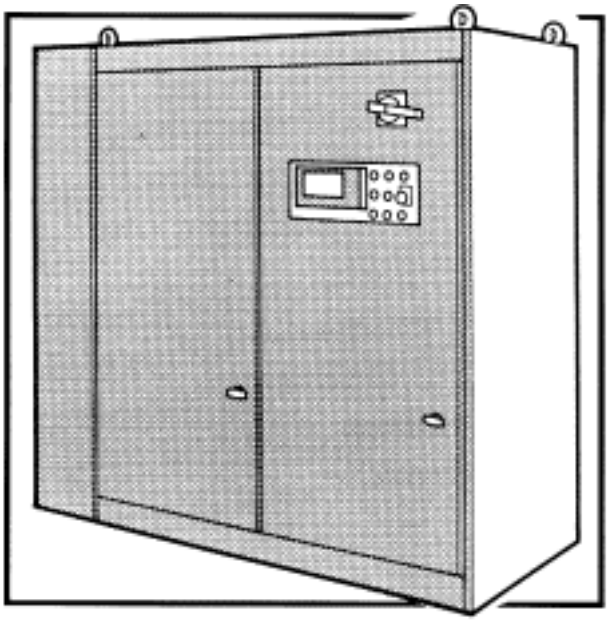

A2. Power generator hazard

The power generator is a module providing the power required for the EPI process. High voltage is present in this module (400/230V - or other voltages). Take appropriate care when approaching this module.

Safety elements:

- Access doors are safety interlocked with a micro and have a lock with key disabling the door safety devices. All doors must be locked and keys removed during operation

⚠ CAUTION

THE SELECTOR KEY MUST BE KEPT BY THE HEAD OF MAINTENANCE AND USED STRICTLY FOR SPECIFIC MAINTENANCE JOBS INSIDE THE POWER GENERATOR.

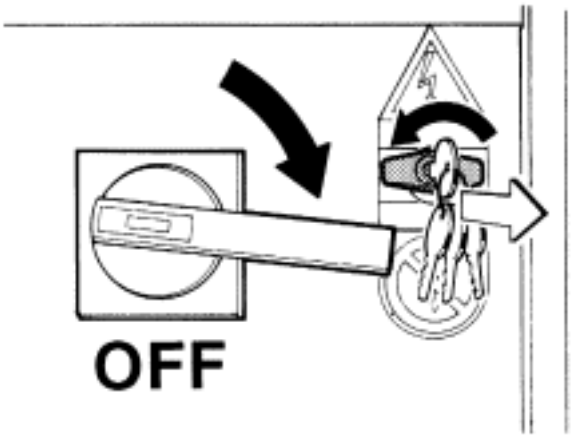

- Mains power must be switched off before accessing dangerous areas.
- Please refer to the generator manual for more information.
- Warning signs indicating residual risks on the generator.

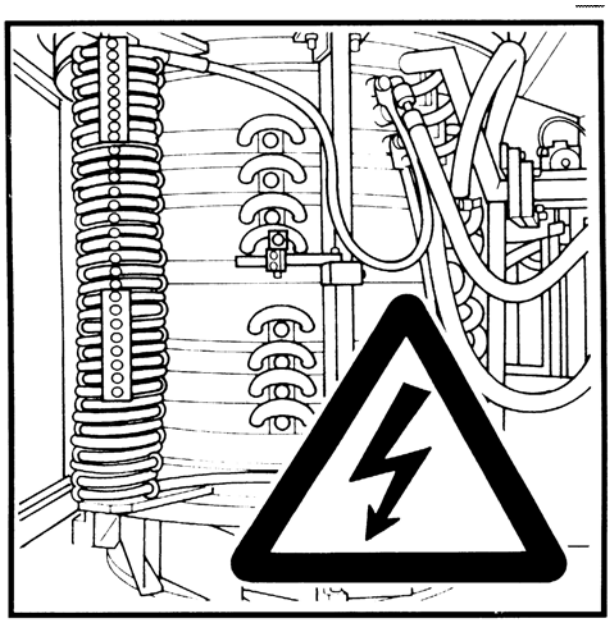

A3. Induction coil hazard

When energized, induction coils operate at a frequency of approx. 4,000 Hz with an across-the-coil voltage of 300-500 Volt.

Induction coils and capacitors make the reactor oscillating circuit providing susceptor heating. Current flow in the oscillating circuit when induction coils are energized is extremely high.

⚠ CAUTION

THE EPIREACTOR PE 2061 IS A DUAL STATION SYSTEM BUT ONLY ONE STATION CAN OPERATE AT A TIME.

NEVERTHELESS, THE IDLE STATION HAS VOLTAGE ACROSS ITS COIL, IF THE OTHER STATION IS OPERATING.

THE EPIREACTOR PE 2061S CAN HAVE ALL TWO STATIONS OPERATIVE

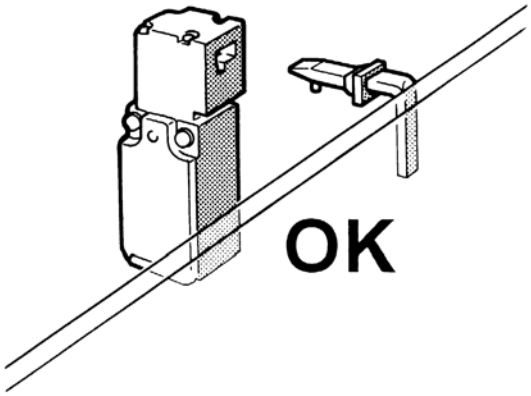

Safety elements:

• Access panels to the induction coils cabinet are safety interlocked (a micro-switch stops the process by cutting voltage to the generator) and require a tool to open them.

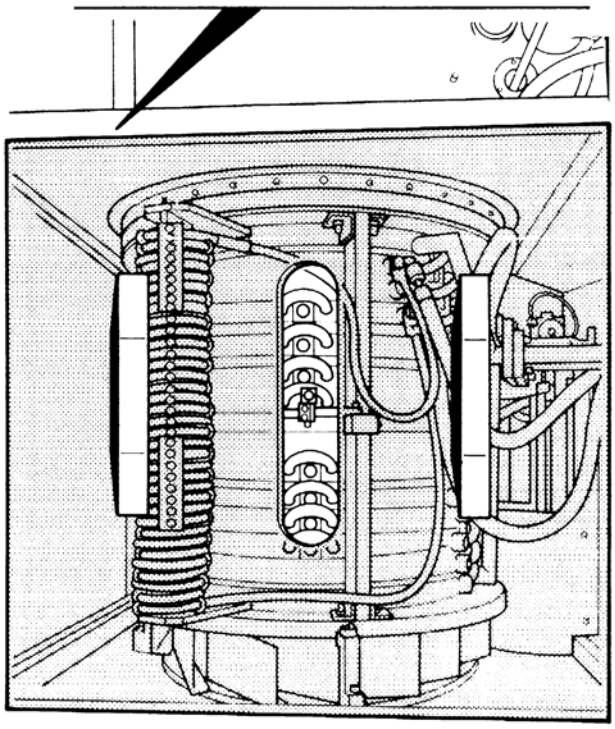

• If the access panel of the idle station is opened, the reactor stops (H level alarm), but access to the induction coils is strictly forbidden while the reactor is running .

A4. Capacitor hazards

When energized, the oscillating circuit MF capacitors operate at a frequency of approx. 4,000Hz with 300-500 Volt across them. PE 2061 MF capacitors have multiple connecting points some of which may not be used. The unused connecting points are usually shorted but, under certain conditions, may remain charged even when power is turned off.

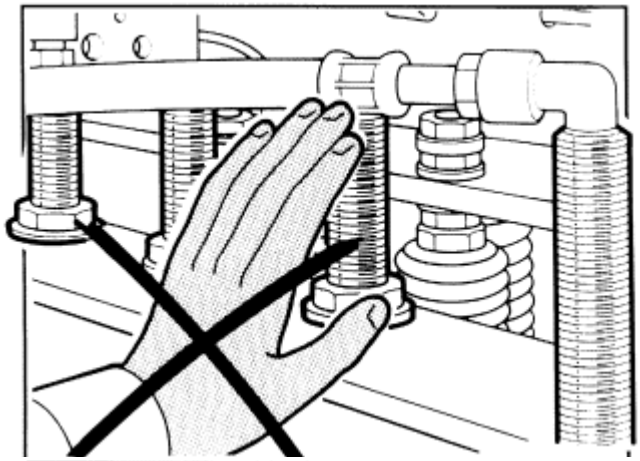

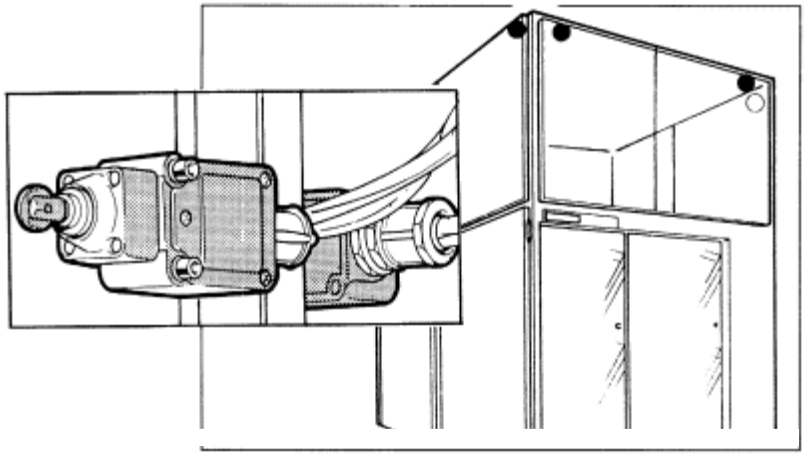

Safety elements:

• Access panels to MF capacitors are safety interlocked (4 micros located on the protective panels cut current to the capacitors **but do not stop the fan**) and require a tool to be opened.

NOTE : all the condenser points (in use, not in use) are directly unloaded during the opening of one of the protective panels

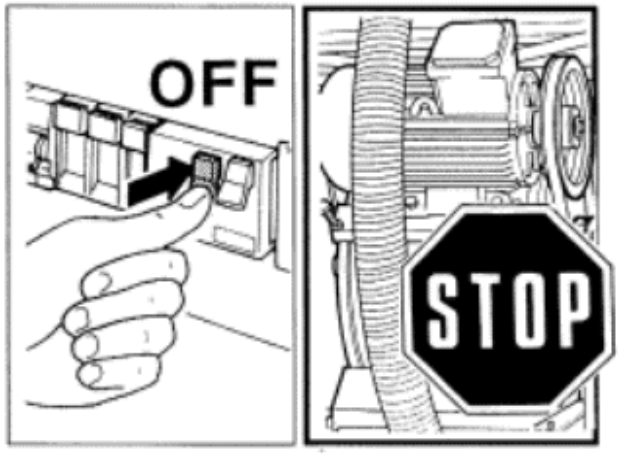

• To carry out maintenance work in this area, **switch machine to power level "0", cut power to the fan, close the switch access panel with a key, and remove the key.**

A5. Lamps lighting the work area (24V)

Safety elements:

• Rotation area upper guard.

General safety measures

Warning labels are affixed on elements subject to electrocution hazard, informing the operator of the residual risk.

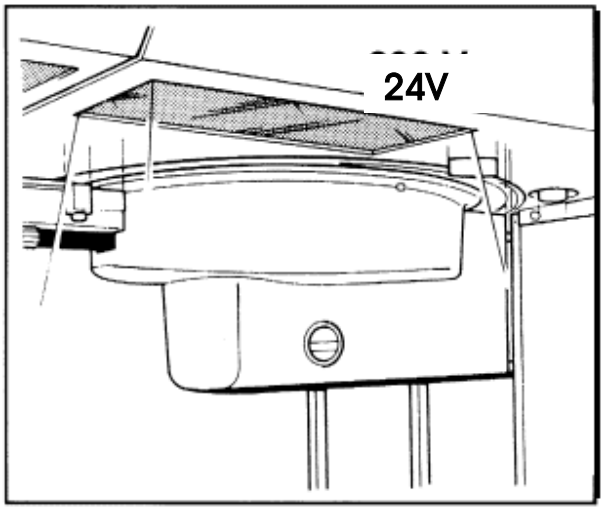

B. HOT BURNS HAZARD

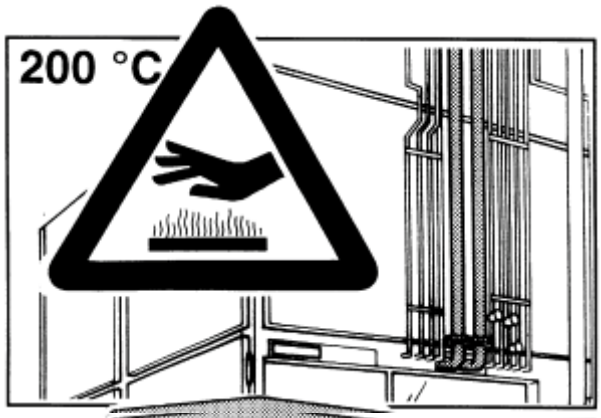

Thermal hazard mainly concerns exhaust pipes and the susceptor during loading/unloading. When the reactor is operating, exhaust pipe temperature can easily exceed 200°C.

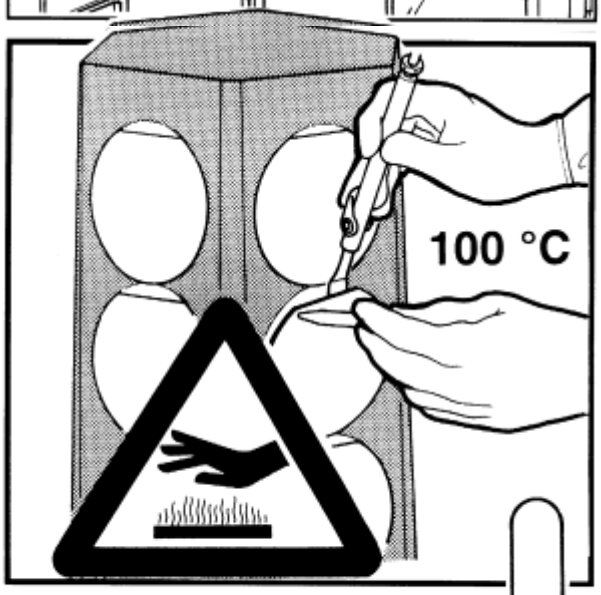

During loading/unloading, susceptor and wafer temperature can easily exceed 100°C.

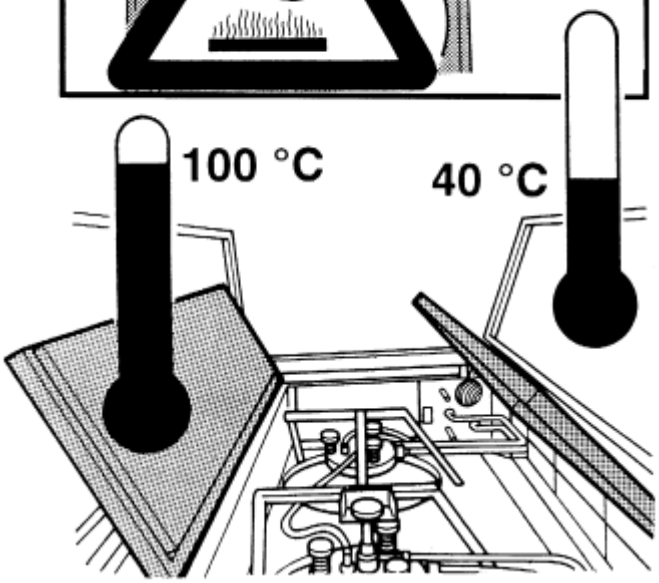

Upper internal panels reach a temperature of 100°C, external panels 40°C.

Safety elements:

- Reactor parts and seals are water or air cooled.
- Sensors are used to detect low flow or high temperature.
- An optional water cooling system is available, with mains water cooling facility in case of power failure.
- Warning labels are affixed on elements subject to hot burns hazard, informing the operator of the residual risk.
- Guards on exhaust gases discharge tubes.
- Safety instructions.

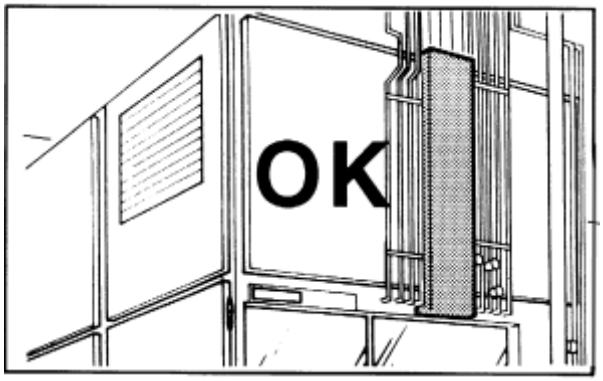

C. EXPLOSION HAZARD

Epitaxial reactors use hydrogen as their main gas in a high temperature environment. An explosion hazard thus exists (in the event of a combination of air, hydrogen and high temperature).
The PE 2061 epi reactor is equipped to prevent and control reaction chamber explosions, should they occur.

Safety elements:

- **Hydrogen sensors (a)** - located inside the gas panel and in the upper area through which the cooling air circuit passes. The sensors, combined with the suction system, control any gas leaks which, in any event, are expelled by the suction system **(a).**
- **The O-rings double seal system (b)** of the shutter-plate and bell-jar top are monitored at every cycle to ensure seal efficiency.
- **Air refreshing system** to prevent accumulation of highly concentrated hydrogen.
- **Front shield (c),** which must be closed when a station is opened in process mode.
- **Massive induction coils and shutter plates** to direct pressure, generated by an explosion, upwards.
- **Pressure relief panels (d)** on the reactor top to vent explosions. Two microswitches immediately stopped the process
- **Pneumatic microswitches (e)**- located on the lifting system. The microswitches have the purpose to inhibit the operation of the valve **H2 MAIN** and **H2 PURGE** during the bell operating
- **Instructions** on cleaning pyroforic scaling.

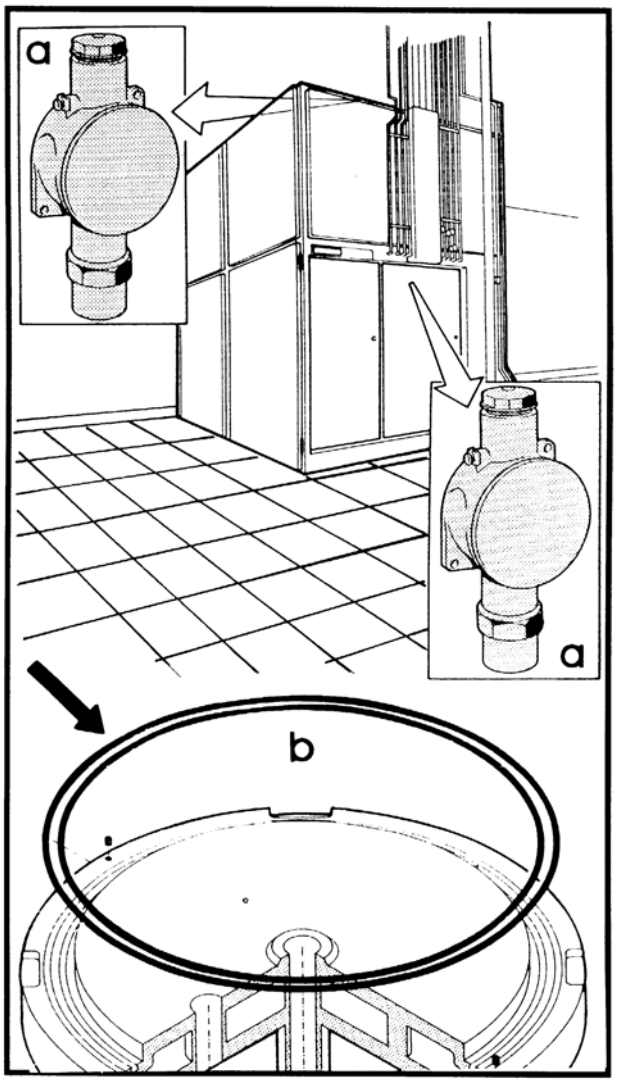

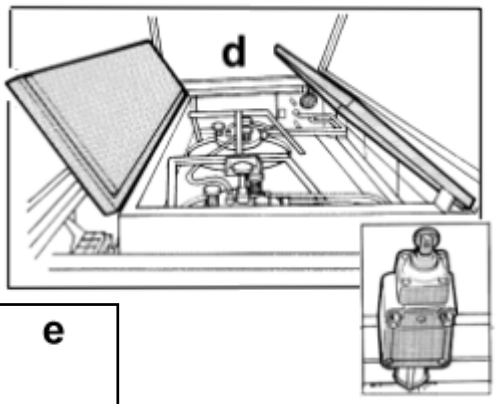

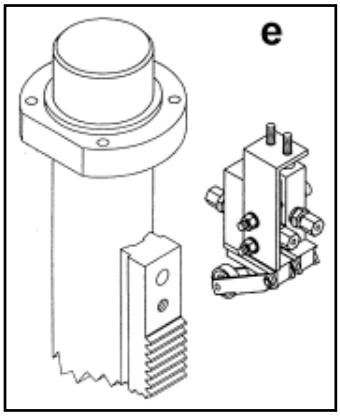

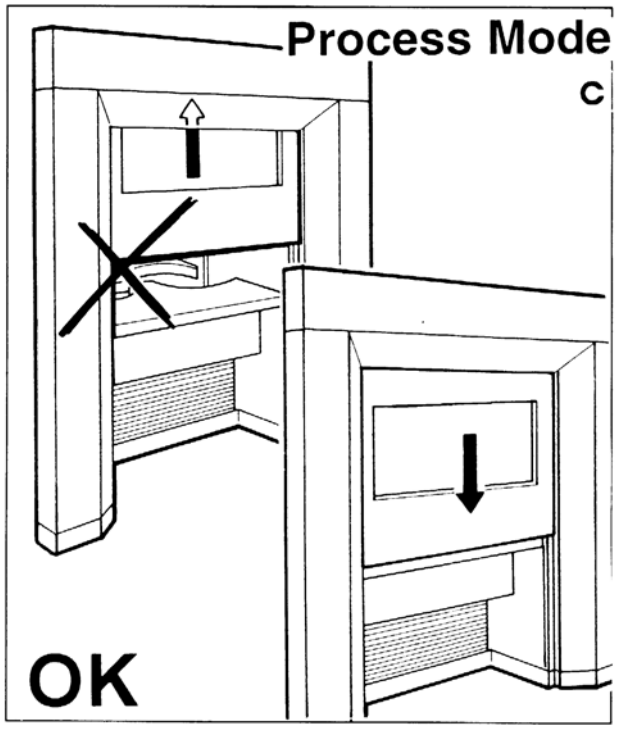

D. SHEARING AND ENTANGLING HAZARD

In the shutter-plate rotation and clamps areas.

Safety elements:

• **Front semi-table (a)** barring access to the equipment elevator area.

• **Elevator micro-switch (b):** Stops elevator movement if the shield is not in its low position (in case of a manually raised or non-closing of the shield).

• **Front panel (c)** : protects the operator by preventing access to the danger area. If the front panel is raised, clearance is not given for equipment movement.

• **Photocell (d)** : prevents the shield from descending and, consequently, rack movement, if an object shadows its beam.

• **Guard on shutter-plate rotation unit (e)** : protects the operator against the risk of entangling.

• **Clamps movement guard (f):** protects the operator against the risk of shearing.

• **Software:** automatically shuts off air to the clamps when the equipment is open.

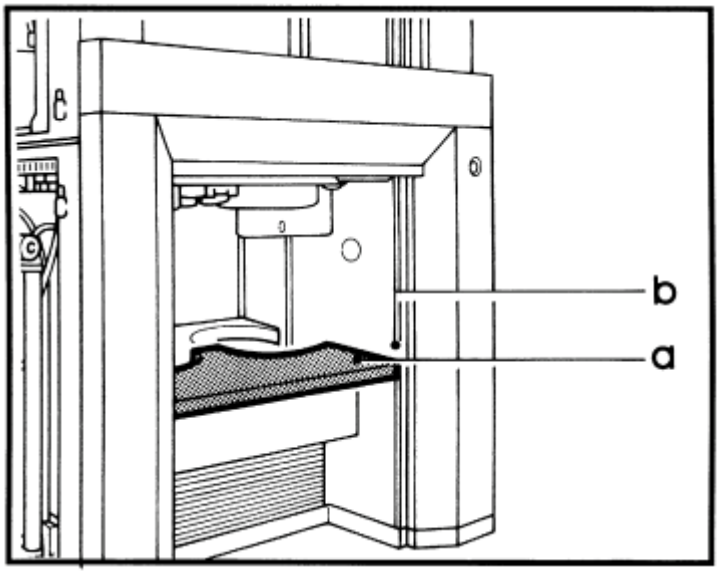

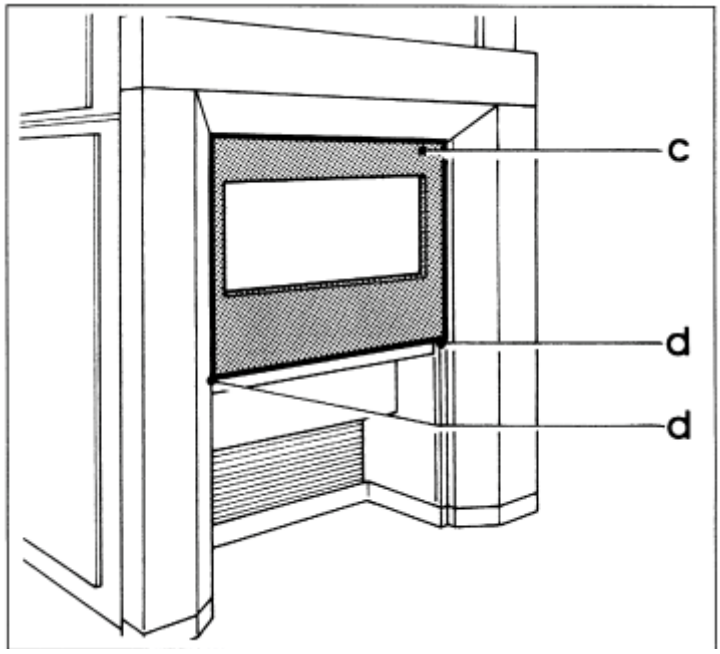

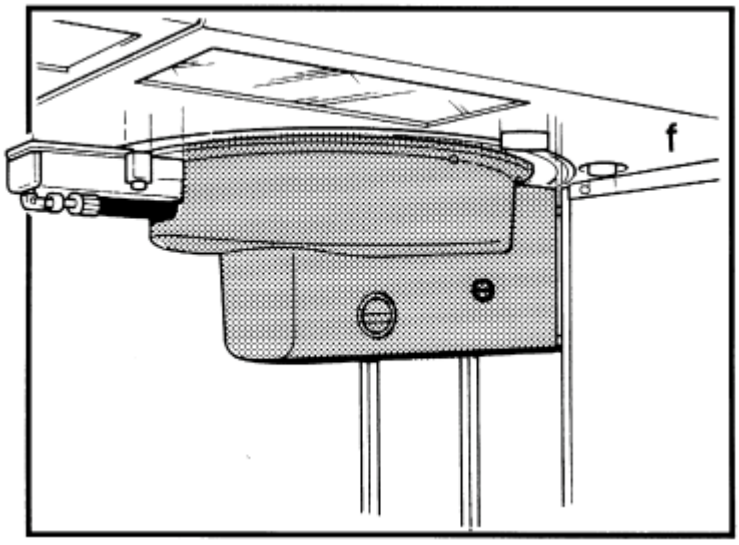

E. CRUSHING AND ENTANGLING HAZARD

In the rack and belts area.

Safety elements:

- **Micro-switches (h)** on access doors (station A and B) stopping rack movements if doors are opened.
- **stationary guard (i)** in the rack guide wheels area: prevents accidental contact with guide wheels.
- **Guard on pulleys and potentiometer belt (j):** prevents accidental contact with moving belts.
- **The front shield** was designed to stop at a specific height above the table to eliminate the possible crushing hazard.

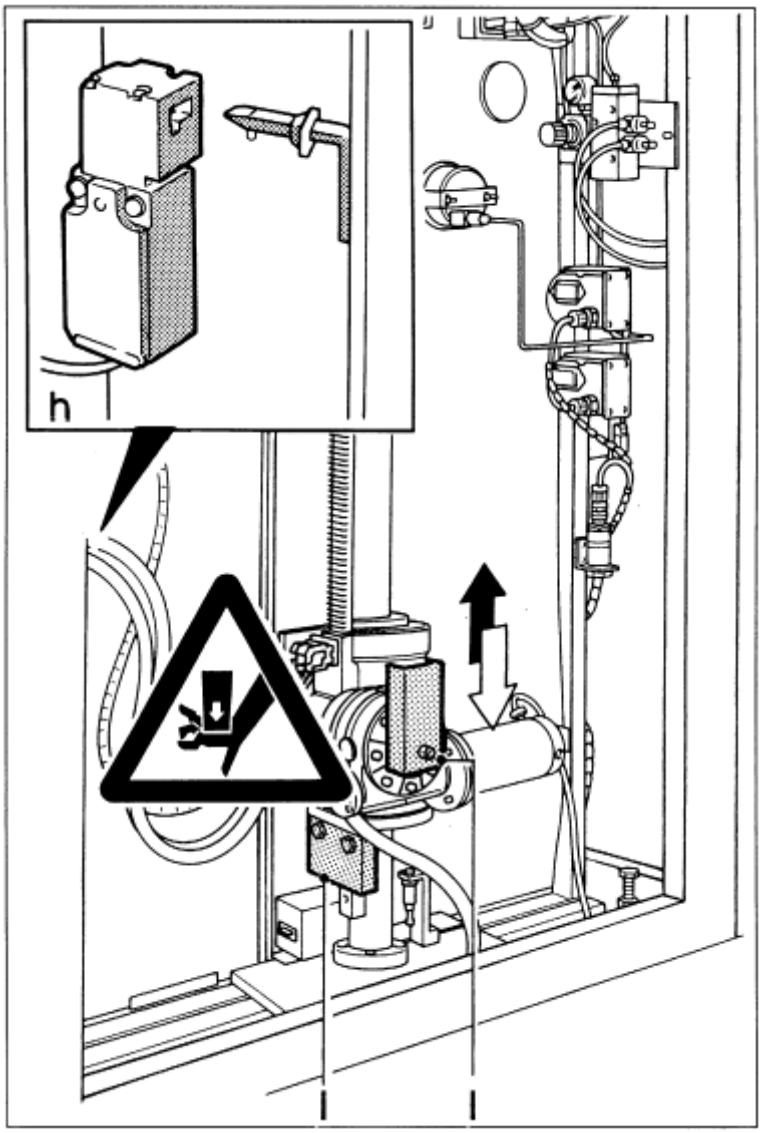

F. TRIPPING HAZARD

In case of application to mobile terminals in the gray room.

G. HAZARD CAUSED BY CHEMICAL SUBSTANCES

A. poisonous gases used in the process

B. acid solvents, used for cleaning quartz parts, that may irritate or injure skin, eyes and respiratory tract.

Safety elements:

- Toxicology information sheets.

H. PRICKING OR CUTS HAZARD

Contact with splinters or chips in the event of breakage of silicon wafers or quartz fragments.

7-7

I. FALLING HAZARD

If inadequate means are used during maintenance or installation work performed high up.

⚠ CAUTION

USE SAFETY STEP-LADDERS TO CURRENT SAFETY REGULATIONS IF WORKING AT HEIGHTS FROM 1.50 TO 2.50 METERS OFF THE GROUND

J. GAS PANEL HAZARDS

The PE 2061 epi reactor is designed to deal with potential gas panel hazards as follows.

Safety elements:

• gas panel components are leak tested

• gas panel components are located in a ventilated cabinet

• the ventilated cabinet has its own Hydrogen leak detector.

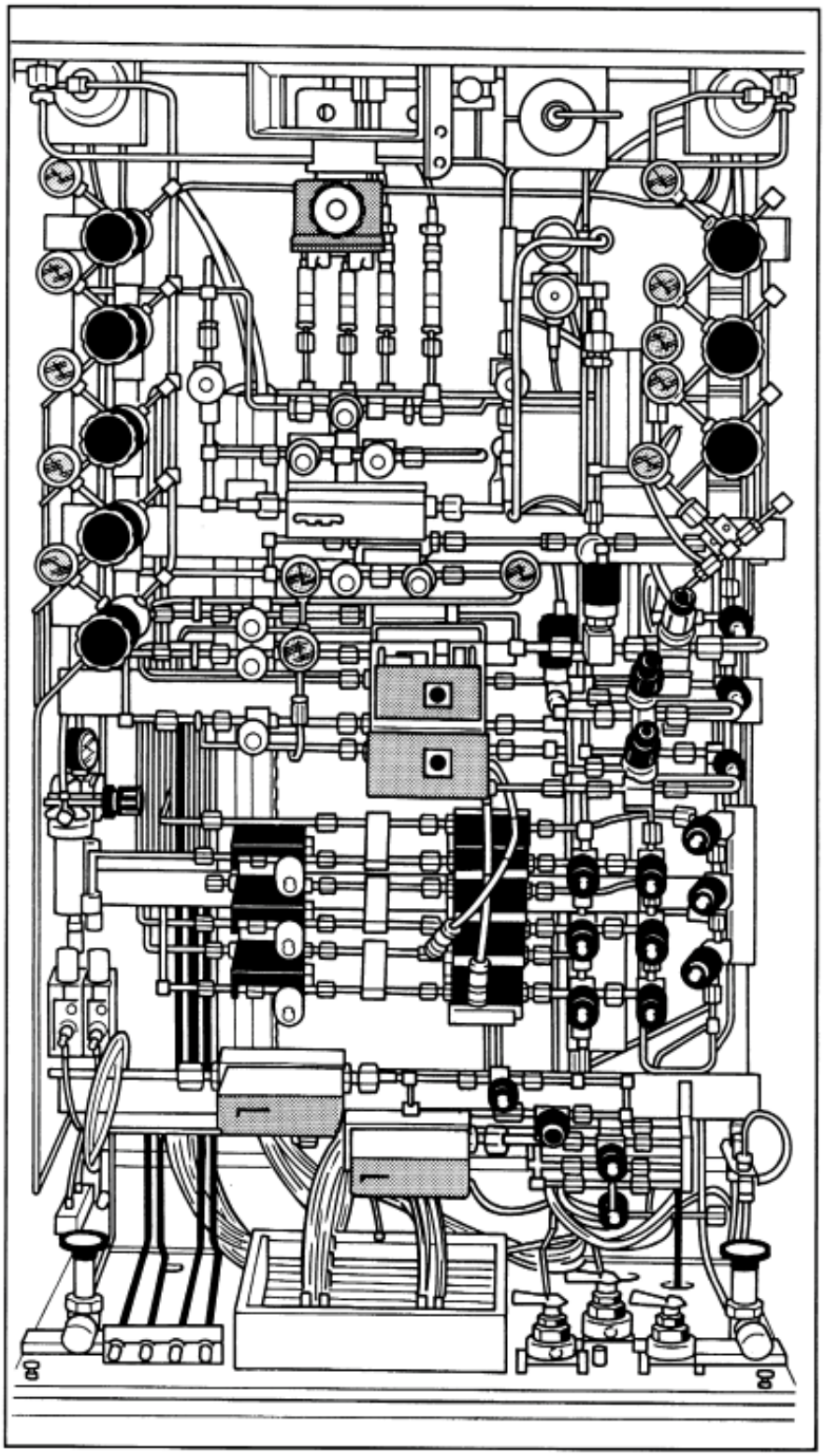

L. OTHER SAFETY ELEMENTS INSTALLED ON MACHINE

L1. Emergency stops

Emergency Power Off buttons are located:

1 - On the front of the reactor (Clean room) : Reactor EMO
2 - On the rear of the reactor (Gray room) : Reactor EMO
3 - On the front of the power generator : Generator EMO

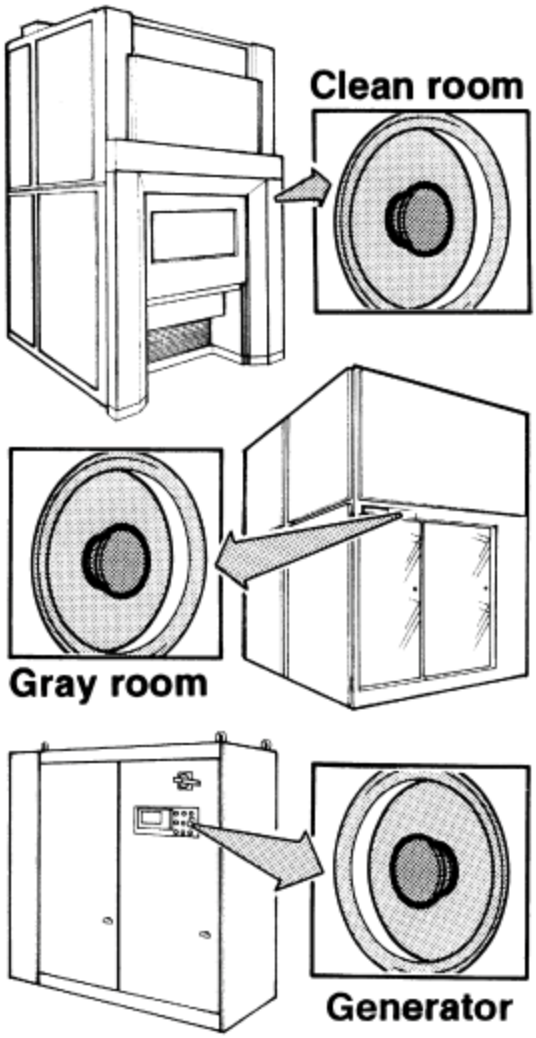

Reactor Emergency Power Off:
Effects of activating the Reactor Emergency Power Off button:
1 - All power in the reactor and generator is turned off
2 - Nitrogen purge begins (through a normally open valve)
3 - Induction coils are no longer energized
4 - Reactor cooling air shut off
After the Reactor Emergency Power Off button has been activated, the reactor has to be restarted manually - this may damage epi wafers and reactor.
5- Cooling water is maintained

Generator Emergency Power Off:
Effects of activating the Generator Emergency Power Off button:
1 – Power in the generator is turned OFF
2- Reactor induction coil are no longer energized
2 - Reactor power is maintained
3 - Reactor alarm level H is usually triggered
4 - Cooling air is maintained
5 - Cooling water is maintained

L2. Light column

This has 3 positions:
GREEN: machine running, a cycle has been started;
STEADY YELLOW: machine powered but not operating;
FLASHING YELLOW: at least 1 station may be unloaded
RED: alarm, code and description shown on DISPLAY
3 COLOR FLASHING SIMULTANEOUSLY
machine being maintained.

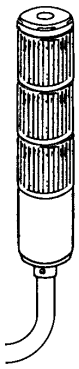

L3. Buzzer

OPERATION STATUS:
intermittent buzzing: one of the stations is ready for unloading;
steady buzzing: alarm or warning status.

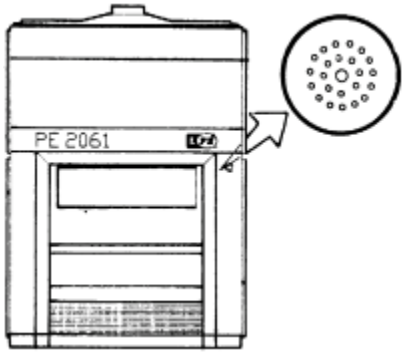

L4. Operating instructions

Informing the operator/s of all safety jobs
to be carried out on the machine and of all residual risks.

L5. Emergency water (OPTIONAL)

This safety is an option, because it is not concerning the Operator safety, but it is recommended for the regular operation of Reactor. During a casual stop event of the cooling feedwater, the emergency water system guarantees the cooling of the induction coil, while the Reactor and Generator are stopping.

This safety is available **only** if is available the "Emergency water kit".

The "Emergency water circuit" has been activated only if the reactor is in process and there is a leak of cooling water.
More in particular, the "Emergency water circuit" has been activated, if for more than 5 seconds:

- One or both "emergency water thermal switch" (Q-49) are activated (real temperature above 40°C).
- The emergency water pressure switch (T-PCW) detect that water cooling pressure is below 1.5 bar.
- The compress air pressure switch (G4) measure a pressure deficiency
- The UPS is in blackout

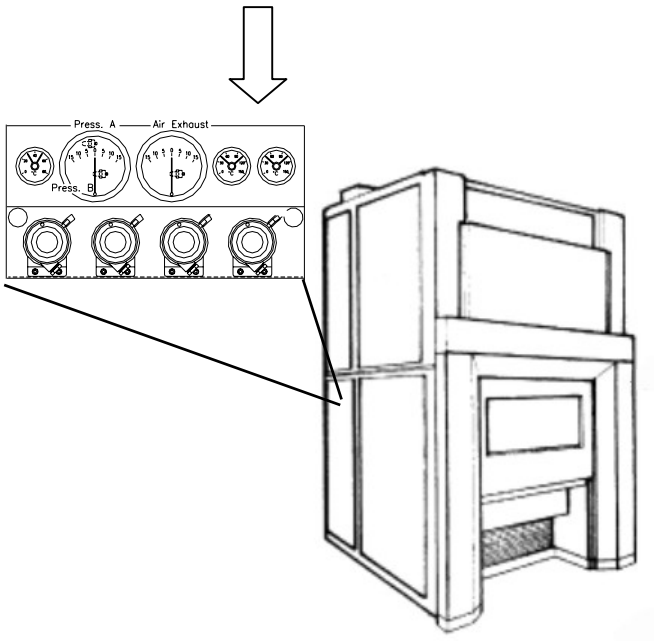

The "Emergency water circuit" has not been activated if:

- Reactor is in process (one or both "emergency water thermal switch" (Q-49) are activated [real temperature above 40°C]), but the emergency water pressure switch (T –PCW) don't detect any leak of cooling water (water pressure above 1 bar).
- Reactor is not in process (both "emergency water thermal switch" (Q-49) aren't activated [real temperature below 40°C]) and the emergency water pressure switch (T –PCW) detects a leak of cooling water (water pressure below 1.5 bar).

The “Emergency water circuit” is divide in two parts: in the box 1, there is the power supply circuit; in the box 2, there is the control system of the thermal switch.

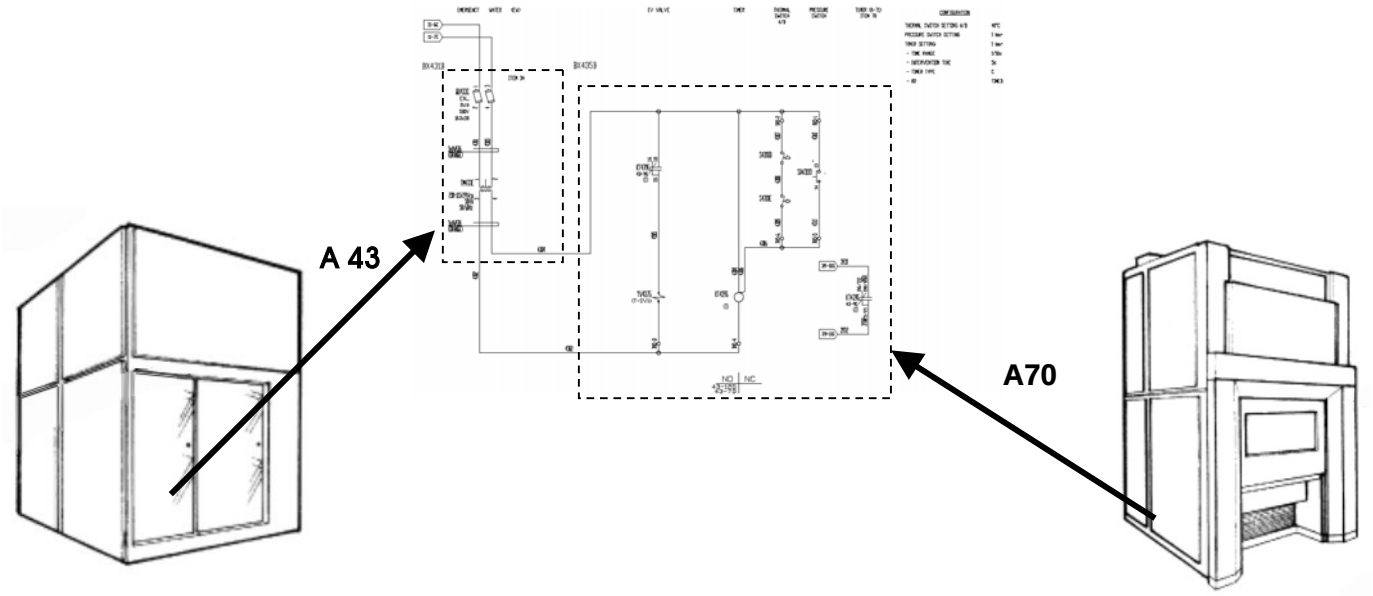

⚠ CAUTION

When the "Emergency water circuit" is active, the emergency city water is mixed with the cooling water softened, therefore after the emergency operating, purge the cooling water system by the city water.

Introduction

The following chapter describes the lay-out of information labels on the reactor and power generator. We should remind you that labels are a passive protective measure and that, in any event, operators must adopt all personal protection measures and observe the instructions in the present **Operating manual** to the letter when performing work in a danger area.

NOTE: the following drawings shows labeling examples , and are not exhaustive; to the complete labeling, please note the exact disposition on the machine.

⚠ CAUTION

REPLACE THE WARNING LABELS IF WORN.

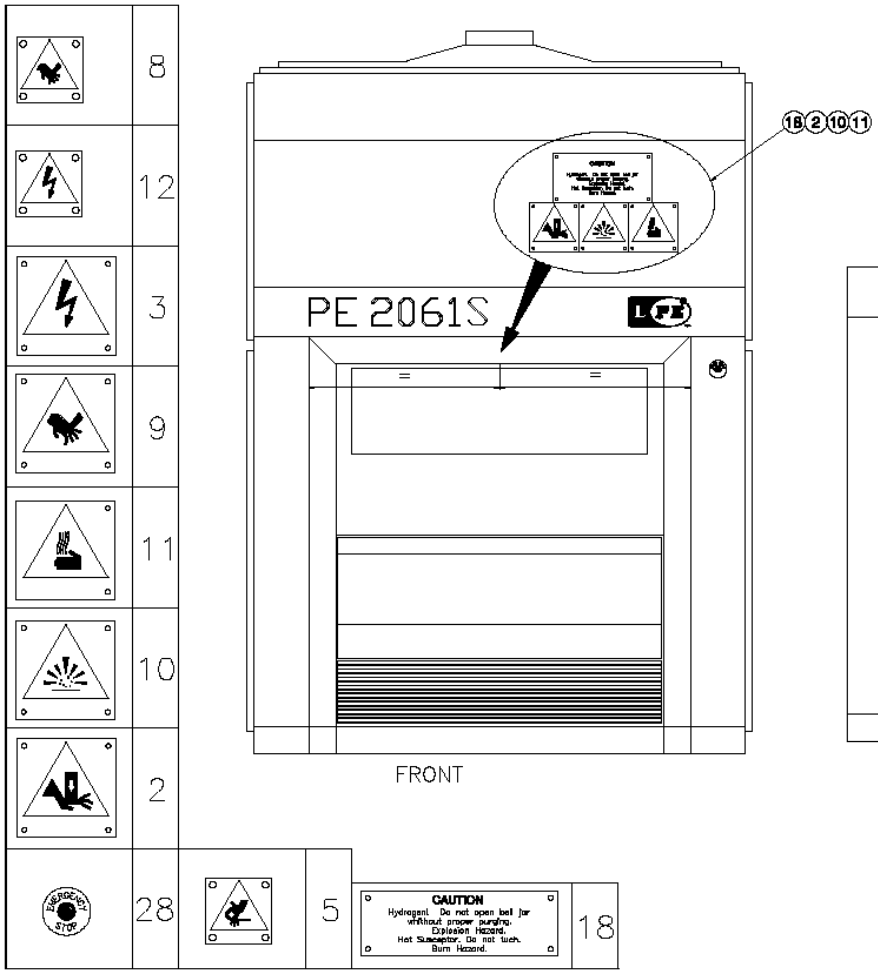
8
12
3
9
11
10
2
28
5
CAUTION
Hydrogen! Do not open bell jar without proper purging.
Explosion Hazard.
Hot Susceptor. Do not touch.
Burn Hazard.
18
PE 2061S
FRONT
18 2 10 11

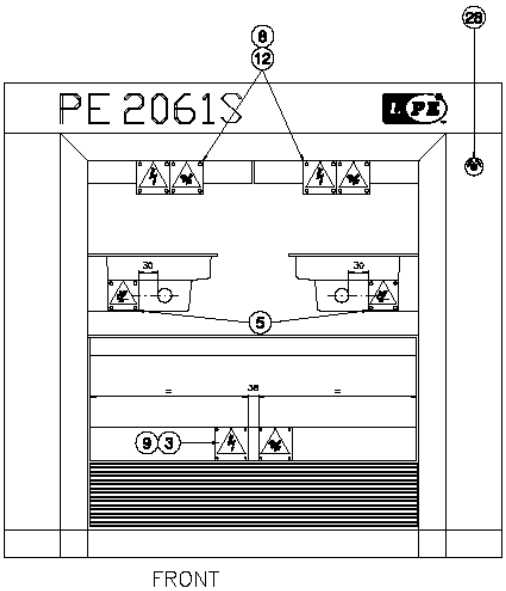
PE 2061S
8
12
28
5
9 3
FRONT

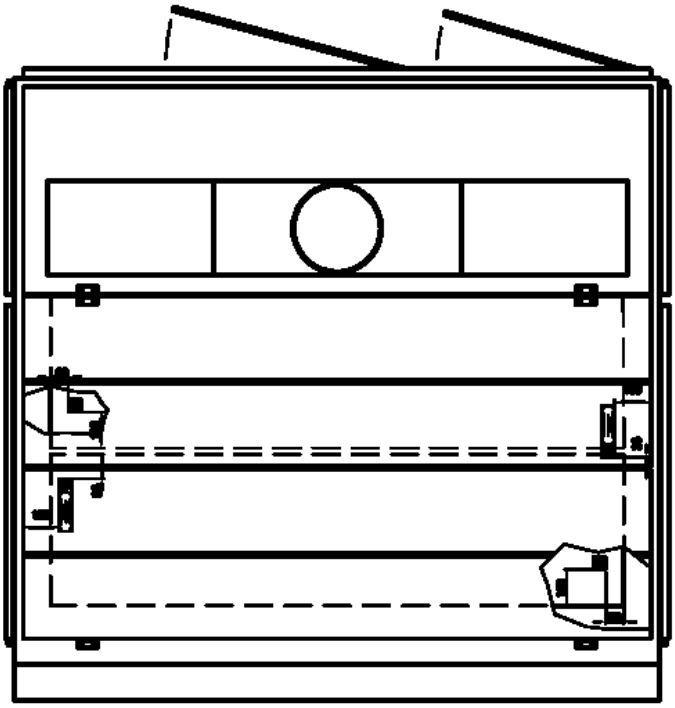

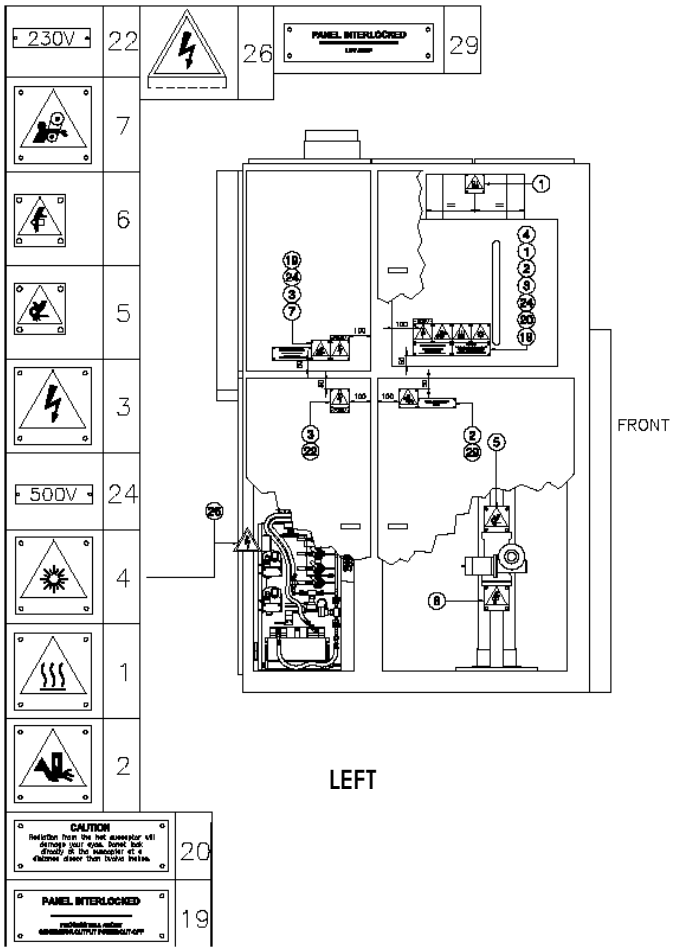

LEFT

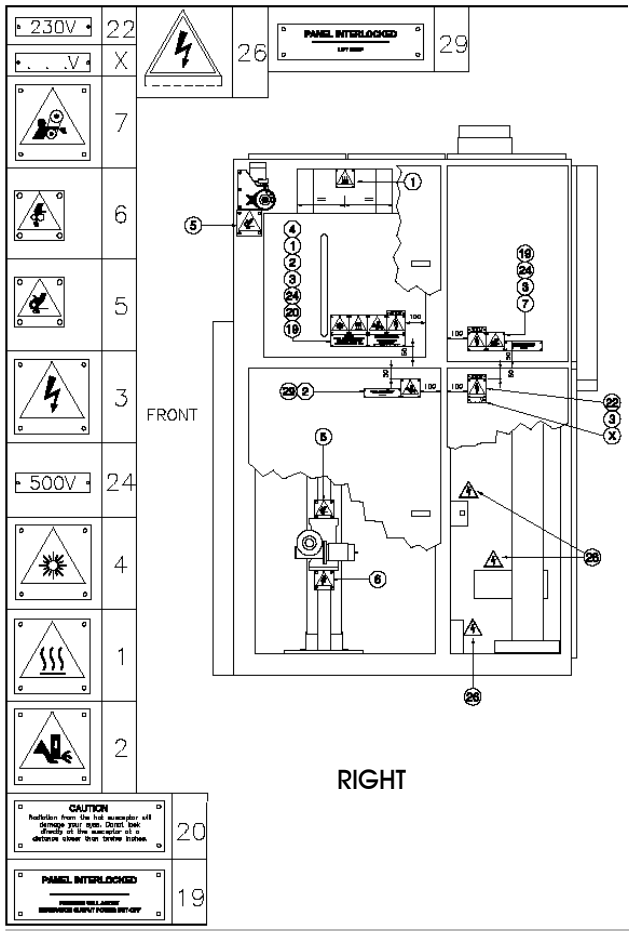

RIGHT

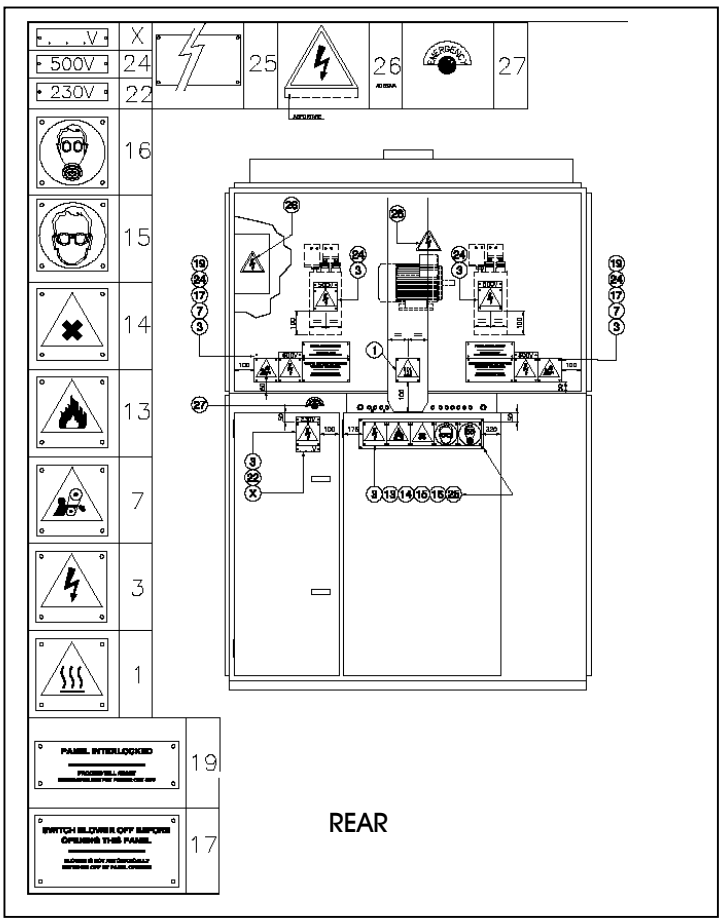

REAR

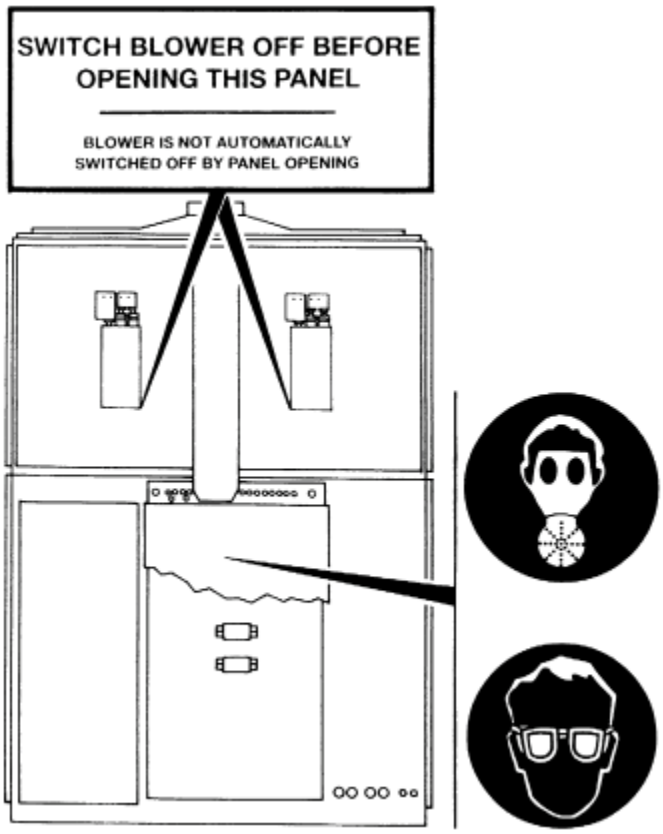

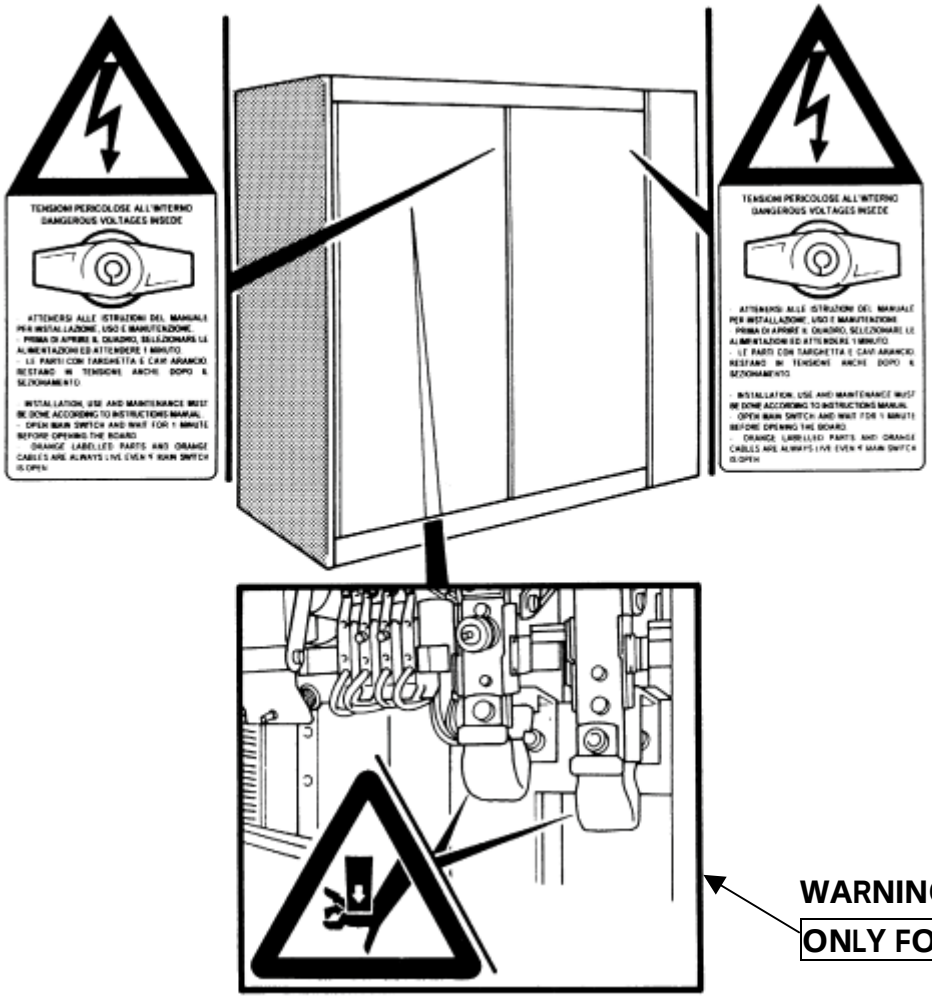
TENSIONI PERICOLOSE ALL'INTERNO
DANGEROUS VOLTAGES INSEDE
- ATTENERSI ALLE ISTRUZIONI DEL MANUALE PER INSTALLAZIONE, USO E MANUTENZIONE.
- PRIMA DI APRIRE IL QUADRO, SELEZIONARE LE ALIMENTAZIONI ED ATTENDERE 1 MINUTO.
- LE PARTI CON TARGHETTA E CAVI ARANCIO RESTANO IN TENSIONE ANCHE DOPO IL SEZIONAMENTO.
- INSTALLATION, USE AND MAINTENANCE MUST BE DONE ACCORDING TO INSTRUCTIONS MANUAL.
- OPEN MAIN SWITCH AND WAIT FOR 1 MINUTE BEFORE OPENING THE BOARD.
- ORANGE LABELLED PARTS AND ORANGE CABLES ARE ALWAYS LIVE EVEN IF MAIN SWITCH IS OPEN.
TENSIONI PERICOLOSE ALL'INTERNO
DANGEROUS VOLTAGES INSEDE
- ATTENERSI ALLE ISTRUZIONI DEL MANUALE PER INSTALLAZIONE, USO E MANUTENZIONE.
- PRIMA DI APRIRE IL QUADRO, SELEZIONARE LE ALIMENTAZIONI ED ATTENDERE 1 MINUTO.
- LE PARTI CON TARGHETTA E CAVI ARANCIO RESTANO IN TENSIONE ANCHE DOPO IL SEZIONAMENTO.
- INSTALLATION, USE AND MAINTENANCE MUST BE DONE ACCORDING TO INSTRUCTIONS MANUAL.
- OPEN MAIN SWITCH AND WAIT FOR 1 MINUTE BEFORE OPENING THE BOARD.
- ORANGE LABELLED PARTS AND ORANGE CABLES ARE ALWAYS LIVE EVEN IF MAIN SWITCH IS OPEN.
WARNING
ONLY FOR PE2061

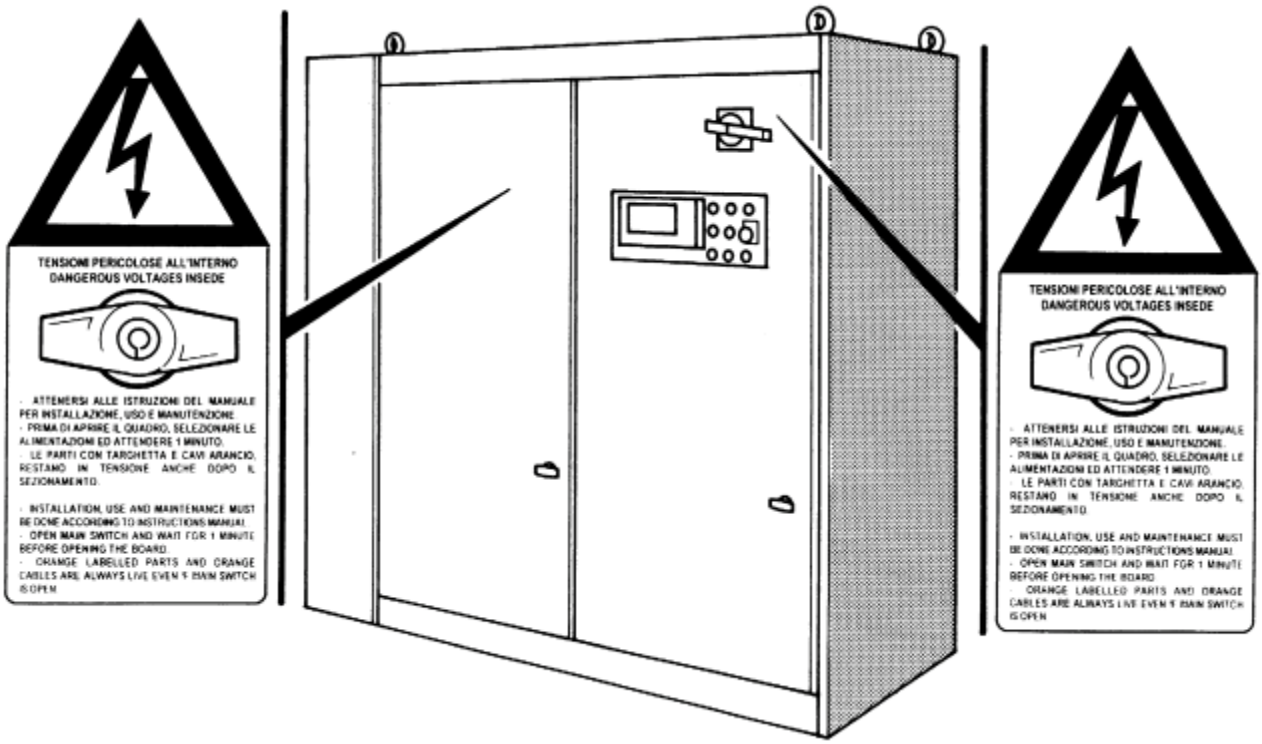
TENSIONI PERICOLOSE ALL'INTERNO
DANGEROUS VOLTAGES INSEDE
- ATTENERSI ALLE ISTRUZIONI DEL MANUALE PER INSTALLAZIONE, USO E MANUTENZIONE.
- PRIMA DI APRIRE IL QUADRO, SELEZIONARE LE ALIMENTAZIONI ED ATTENDERE 1 MINUTO.
- LE PARTI CON TARGHETTA E CAVI ARANCIO RESTANO IN TENSIONE ANCHE DOPO IL SEZIONAMENTO.
- INSTALLATION, USE AND MAINTENANCE MUST BE DONE ACCORDING TO INSTRUCTIONS MANUAL.
- OPEN MAIN SWITCH AND WAIT FOR 1 MINUTE BEFORE OPENING THE BOARD.
- ORANGE LABELLED PARTS AND ORANGE CABLES ARE ALWAYS LIVE EVEN IF MAIN SWITCH IS OPEN.
TENSIONI PERICOLOSE ALL'INTERNO
DANGEROUS VOLTAGES INSEDE
- ATTENERSI ALLE ISTRUZIONI DEL MANUALE PER INSTALLAZIONE, USO E MANUTENZIONE.
- PRIMA DI APRIRE IL QUADRO, SELEZIONARE LE ALIMENTAZIONI ED ATTENDERE 1 MINUTO.
- LE PARTI CON TARGHETTA E CAVI ARANCIO RESTANO IN TENSIONE ANCHE DOPO IL SEZIONAMENTO.
- INSTALLATION, USE AND MAINTENANCE MUST BE DONE ACCORDING TO INSTRUCTIONS MANUAL.
- OPEN MAIN SWITCH AND WAIT FOR 1 MINUTE BEFORE OPENING THE BOARD.
- ORANGE LABELLED PARTS AND ORANGE CABLES ARE ALWAYS LIVE EVEN IF MAIN SWITCH IS OPEN.

A. Introduction

This chapter contains safety information of interest to personnel working with LPE Epitaxial reactors. The information is of a general nature and concerns hazards entailed in operating and maintaining LPE reactors.

Operators and maintenance people must understand the hazards associated with high voltages and frequencies, corrosive, reactive and toxic gases, moving parts, heated and hot parts, and must be aware of the safety measures to be adopted to deal with such hazards.

Operators and maintenance people must understand reactor interlocks and have in-depth knowledge of the reactor they will be using, because this safety section is not intended as an alternative to mastering the technique involved in the use and maintenance of this specific reactor.

B. Definitions

- **OPERATOR:**
  A persons or persons entrusted to install, operate, adjust, maintain, clean, repair or transport the machine (UNI EN292/2).
- **DANGER AREA:**
  Any area inside and/or near the machine in which a person is exposed to injuries or damage to his/her health (UNI EN 292/2).
- **EXPOSED PERSON:**
  Any person located entirely or partly in a danger area (UNI EN292/2).
- **SAFETY DEVICES:**
  (UNI EN292/2).

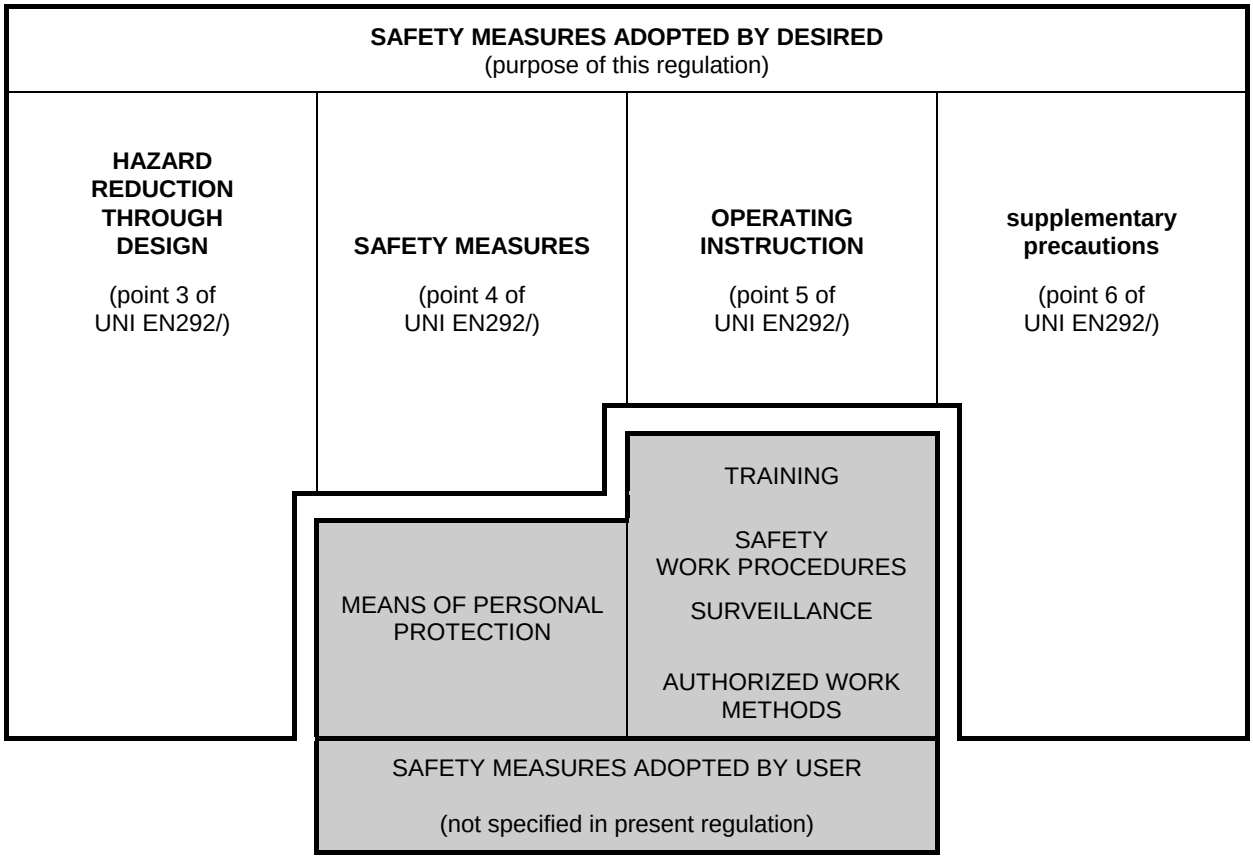

C. GENERAL SAFETY

REACTOR ON POWER LEVEL "0"

Some maintenance and cleaning jobs must be performed with the reactor set to power level "0". Procedure for isolating the machine from power sources:

C1. Isolation from electric power sources

1 - START REACTOR SWITCH-OFF PROCEDURE

a - To ensure efficiency, both bell-jars must be closed and nitrogen purging must be completed.
b - The reactor shutdown command switches the reactor off in the correct way.
c - Select the reactor shutdown command from the management menu.
d - The operator could now reduce the nitrogen flow through the MV12 valve.

2 - WORK STATION SHUTDOWN PROCEDURE

⚠ CAUTION

IT IS MANDATORY TO SWITCH OFF THE WORK STATION FOLLOWING THE ENCLOSED SHUTDOWN PROCEDURE. A POWER FAIL OR NOT PROPER SHUTDOWN MAY DAMAGE THE FILE SYSTEM.

a - Select **management** option from main menu.
To access the management both bell jars must be:
- in free status
- open consent.

b - Select reactor **shutdown** command. The reactor will be switched off.
c - Select **work station shutdown.**
d - At the end of this command the workstation is ready to be switched off.

3 - Using the master switch **,** CUT POWER to the converter and fit the padlock.

4 - Cut power to the master switch to the reactor and fit the padlock.

⚠ CAUTION

5- DURING MAINTENANCE WORK, THE KEYS MUST BE KEPT BY THE DEPARTMENT HEAD OR BY THE PERSON CARRYING OUT MAINTENANCE, UNTIL WORK HAS FINISHED.

6 - Place "**Maintenance in progress**" signs both on reactor and converter, if maintenance work requiring the reactor at **"0"** power level has to carried out.

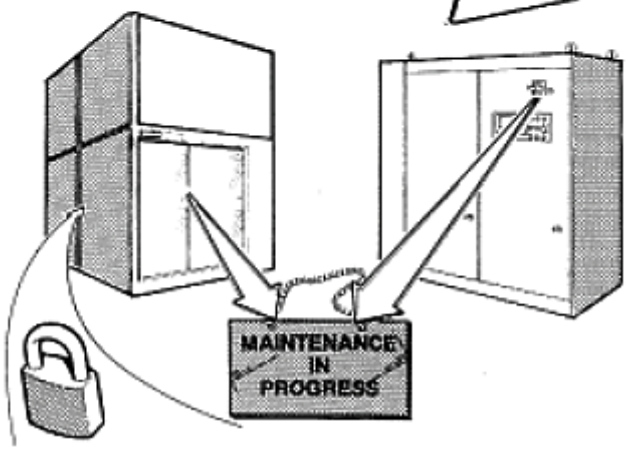

C2. Isolation from pneumatic/process gas power sources.

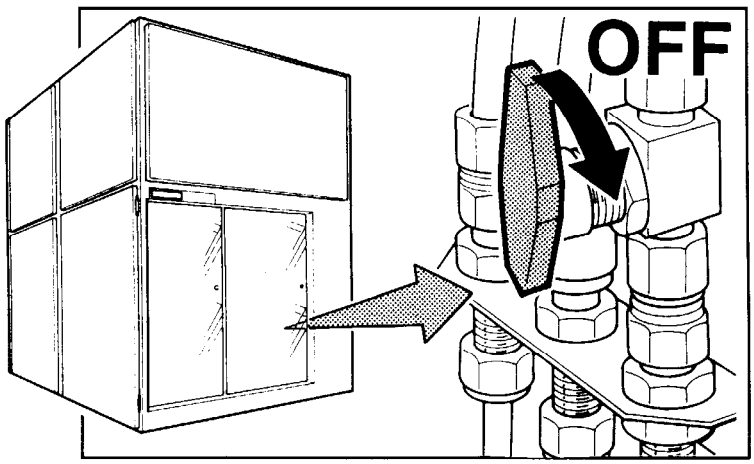

PNEUMATIC

1 - Shut the line on/off valve.

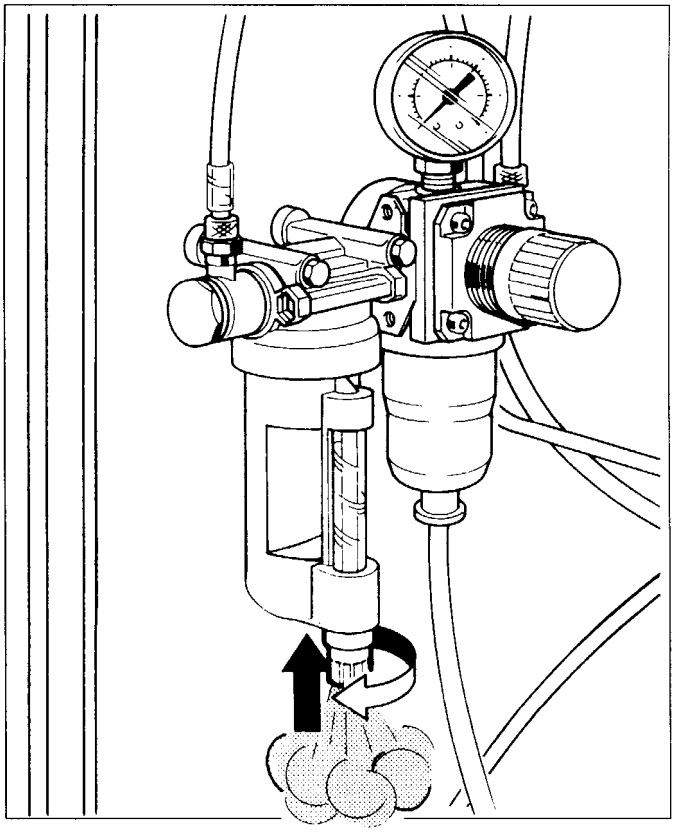

2 - Shut pressure from the circuit using the knob on the FR+L unit.

PROCESS GAS

⚠ CAUTION

BEFORE ATTEMPTING ANY JOB ON THE GAS METERING UNIT, CAREFULLY OBSERVE THE INSTRUCTIONS AND PROCEDURES INDICATED IN THE "MAINTENANCE" CHAPTER.

1 - Shut the on/off valves on the gas metering unit, in case of gas leaks from the panel (emergency state) or if doing maintenance work.

⚠ CAUTION

IN CASE OF PROLONGED DOWN-TIME, CONSULT THE "STOPS" CHAPTER TO EXECUTE THE CORRECT STOP AND RESTART PROCEDURE.

C3. Isolation from water power source

1 - Shut the on/off valves at the delivery and outlet ports.

NOTE: To discharge residual pressure, use the drain valve installed by the customer.

D. GENERAL PRECAUTIONS AGAINST ELECTRICAL HAZARDS

The following is a partial list of action/necessary measures for a safer approach to electrical hazards.

- Unless strictly necessary for troubleshooting, always disconnect the circuits from their source of power before servicing them.
- Pull fuses, open breakers and lock them out to ensure that nobody re-connects the circuits to their power source without your knowledge.
- If lock-out or tag-out are not possible or practical, arrange for someone to be at the control station to prevent accidental activation.
- If you have to work on a circuit while power is connected, get another person to watch you so that he/she can rescue you in case of emergency.
- Your helper cannot act as observer at the same time.
- Keep yourself and your clothing dry.
- Do not wear rings, bracelets, necklaces, jewelry in general, or metal glasses when working on electrical modules.
- Do not use pencils as pushers, do not use coins or keys or keep them in your pockets.
- Carefully check if your test equipment is correctly insulated.
- Check grounding carefully, making sure that the equipment frame is connected to the ground plate.
- Beware of charged capacitors as they can maintain a charge for several days after power has been disconnected.
- Use proper, good quality tools for the job.
- Do not use damaged tools.
- Use non conductive tools or metal tools with insulated handles and covers.
- Do not by-pass interlocks.

E. GENERAL PRECAUTIONS AGAINST GAS HAZARDS

The following is a partial list of actions/necessary measures for a safer approach to gas hazards.

- Learn about the gases you will be using, be aware of the associated hazards and first aid requirements.
- Find out where the following are located: eye-washer, shower, breathing independent equipment.
- Do not wear rings. bracelets, necklaces and jewelry in general.
- Do not wear contact lenses.
- Always wear protective glasses.
- Always take a leak detector with you.
- Remember that hazardous chemical reactions can occur with commonly used materials.
- Considering about gases used by reactors (PH3-AsH3-B2H6-SiCl4-SiCl3-SiH2Cl3-SiH2Cl2-HCl) we suggest the use of protective masks with a specific filter protecting against chlorine and hydrochloric acid (Type B filter cartridge).

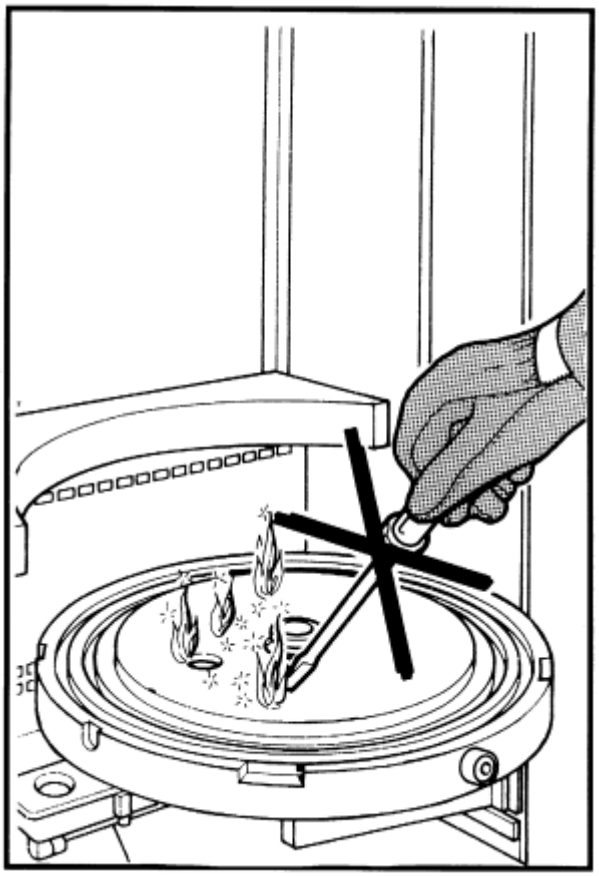

- The scales and deposits on the shutter-plate (through continuous exposure to SiHCl2, SiHCl3 and SiCl4) can easily catch fire if handled incorrectly. Do not use dry cloths, do not use screwdrivers or similar tools to remove scales and deposits.

Besides the **CHLOROSILANE** that come into contact with air and humidity may develop HCl vapors.

(See correct cleaning procedure in Maintenance manual).

⚠ WARNING

In case of accident, it is obligatory the use of protective masks or of a self breathing set at the best.

F. ESCAPE ROUTE IN CASE OF FIRE

⚠ WARNING

IN CASE OF FIRE, SHUT VALVES OF INFLAMMABLE GAS LINES.

Observe the current regulations of the plant regarding areas
in which gaseous, inflammable, poisonous and acid substances
are used.

Strictly use portable extinguishers (CO2 or powder) and ABSOLUTELY
DO NOT USE water.

⚠ WARNING

CHOLOROSILAN IN WATER PRODUCE HYDROCHLORIC ACID THUS INCREASING HAZARD STATUS IN THE ENVIRONMENT.

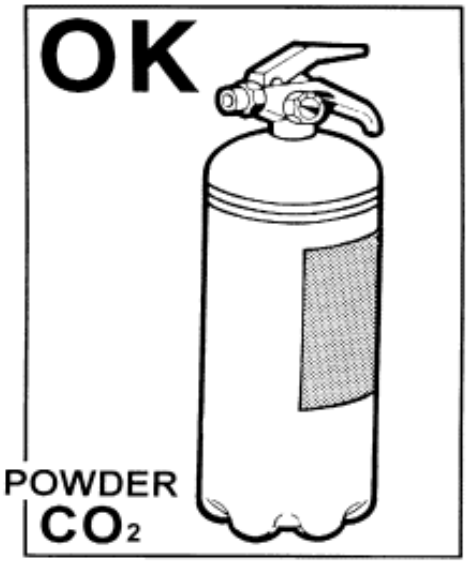

G. PROTECTIVE DEVICES FOR OPERATORS

Machine operators need not wear any special clothes for safety purposes, however special clothing is required for process purposes. In any event, we advise you against wearing loose, voluminous clothing, watches, chains or other objects that may become entangled.

For maintenance jobs on the Gas panel, use masks and protective goggles.

PACE-MAKER wearers should not work on the machine.

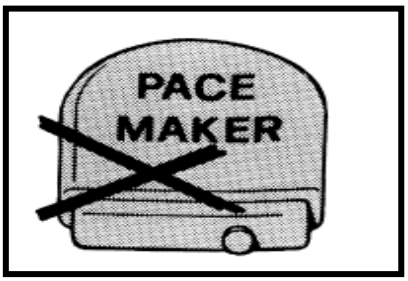

Gather and tie your hair and, in case of heavy duty maintenance jobs, wear protective shoes, gloves and goggles.

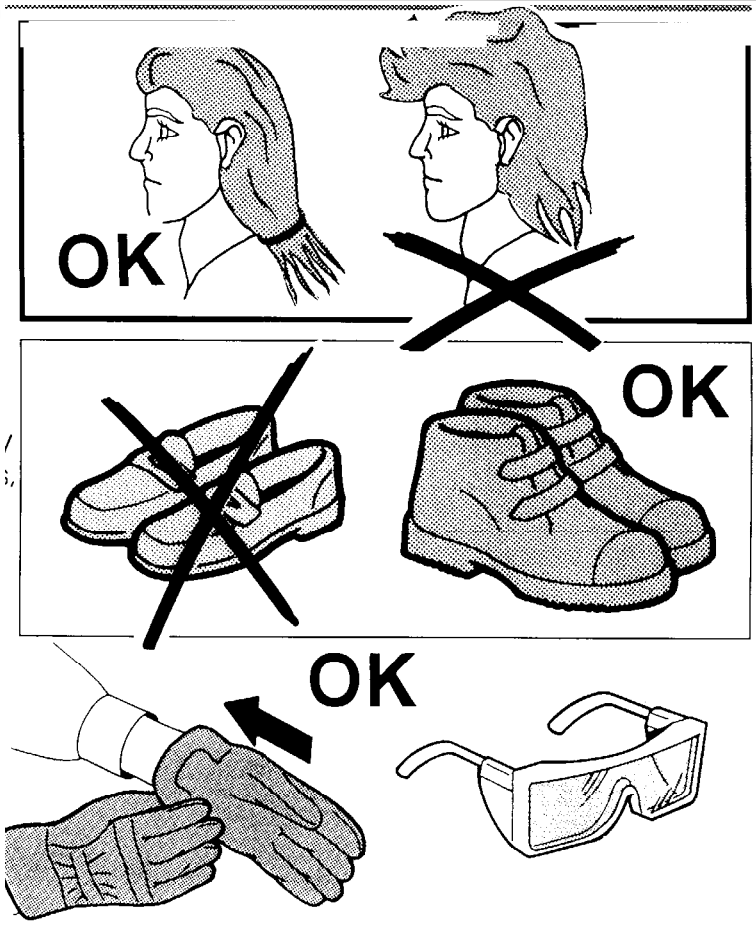

H. NOISE LEVEL

The reactor's noise level, in the Clear Room is =70 dB(A), in the Gray Room is = 80 dB(A). Therefore it is not necessary to wear hearing protectors.

I. NUMBER OF RECOMMENDED OPERATORS AND SAFE POSITIONS

A single machine operator is required in the **CLEAN ROOM.**
The safe position for the operator is outside an angle of 90° from the machine center (clear area after explosion of the bell and possible ejection of quartz parts). However, the operator need not stand in front of the machine, except when loading or unloading wafers from the susceptor.

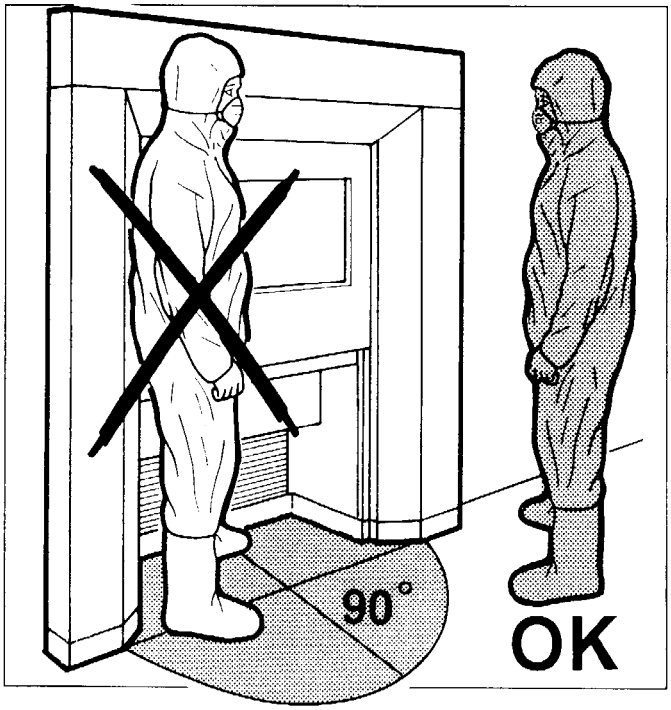

J. HOT BURNS HAZARD

The machine exterior reaches temperatures of 30-40°C max.
Reactor parts and seals are water or air cooled.
Sensors are used to detect low flow or high temperature.

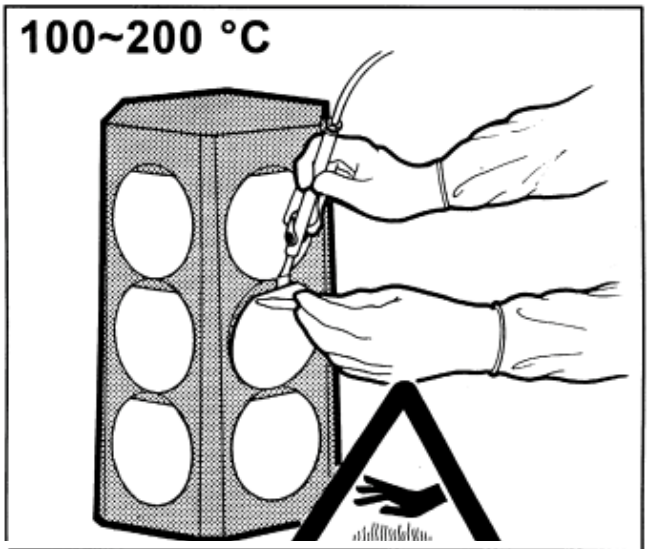

⚠ CAUTION

DO NOT, FOR ANY REASON, TOUCH THE SUSCEPTOR WHILE WAFERS ARE BEING UNLOADED.
AT THIS STAGE, SUSCEPTOR TEMPERATURE IS 100 TO 200°C.

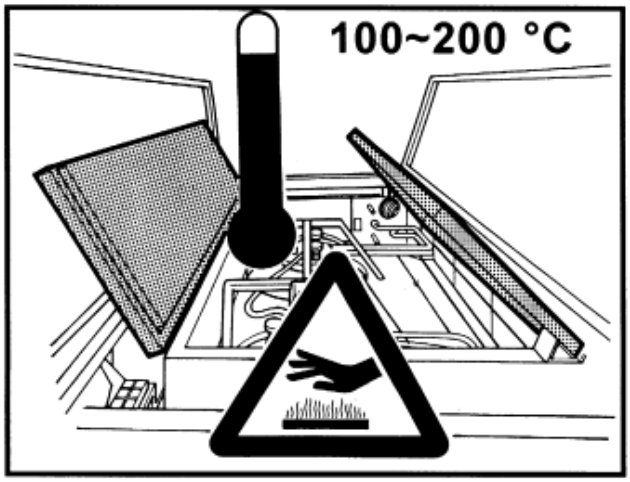

⚠ CAUTION

DO NOT CLIMB ON TOP OF THE MACHINE OR TOUCH THE UPPER DOORS, WHICH CAN REACH TEMPERATURES OF 100 TO 200°C.

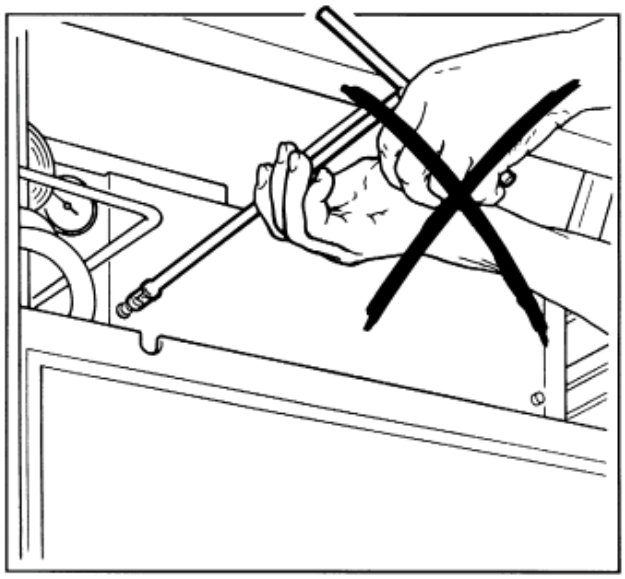

⚠ CAUTION

DO NOT REMOVE THE UPPER DOOR FOR ANY REASON WHATEVER .
WHEN MAINTENANCE WORK HAS FINISHED, MAKE SURE THAT THE DOOR IS BACK IN POSITION AND THE 2 SCREWS TIGHTENED.

SEQUENCE OF CORRECT OPENING AND CLOSING OF THE UPPER DOOR

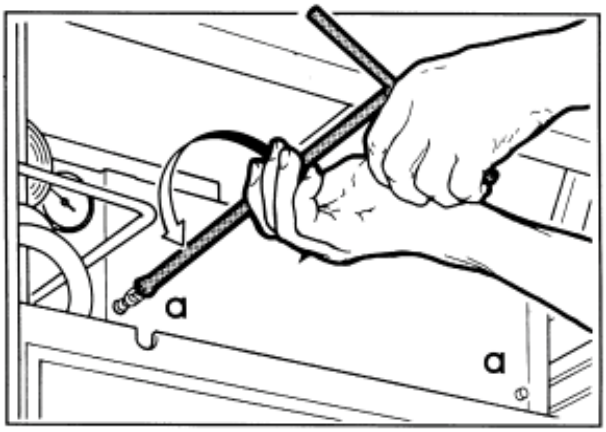

- **To open the upper door:**
  Unscrew and remove the two screws **(a),** then rotate to 180 ° the two small handles **(b)**
  upwards and pull the door **(c).**

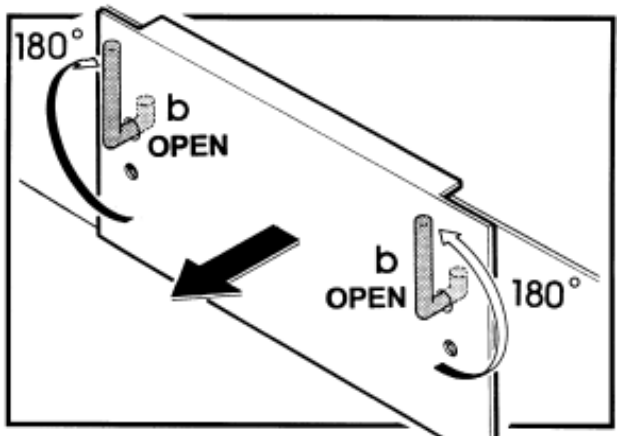

- **To close the upper door:**
  Position the two small handles **(b),** introduce the keys into the appropriate slots **(d)** and rotate to 180 ° the small handles **(b)** downwards.

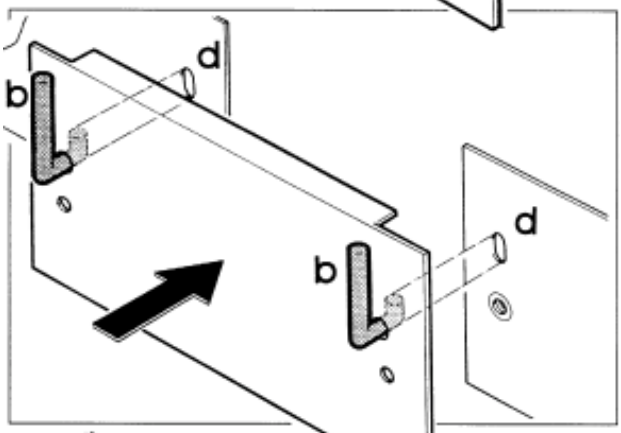

Screw the two screws **(a).**

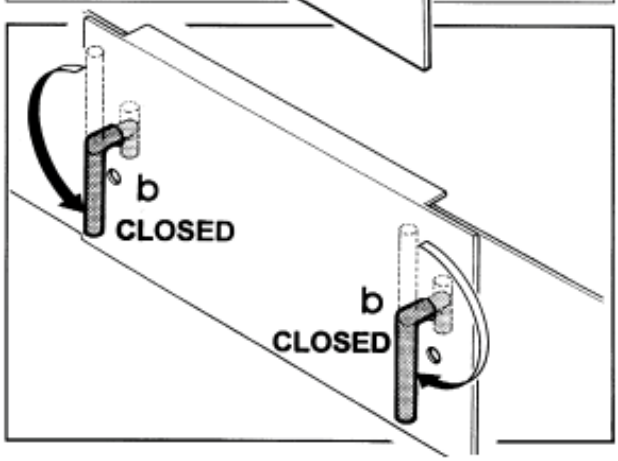

⚠ CAUTION

THE SMALL HANDLES ARE PART OF A SAFETY SYSTEM, THEREFORE THEY MUST NOT BE REMOVED. THE UPPER DOOR CLOSING MUST BE ASSURED BY THE SCREWS .

While the reactor is operating, the temperature of the discharge tubes can easily exceed 200°C.

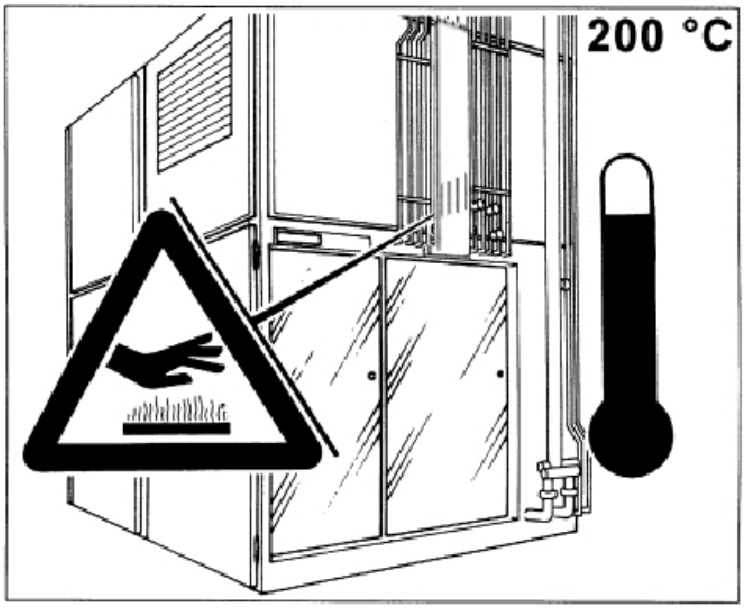

⚠ CAUTION

DO NOT TOUCH THE TUBES AND DO NOT REMOVE THE TUBE GUARD FOR ANY REASON WHATEVER.

k. SAFETY DEVICES - DISABLING

Do not tamper with any micro-switches and limit switches fitted on the machine.
The micro-switches prevent access to areas in which there is entangling, cutting, crushing or electrocution hazard, and eliminate such hazards in the area where they are located.

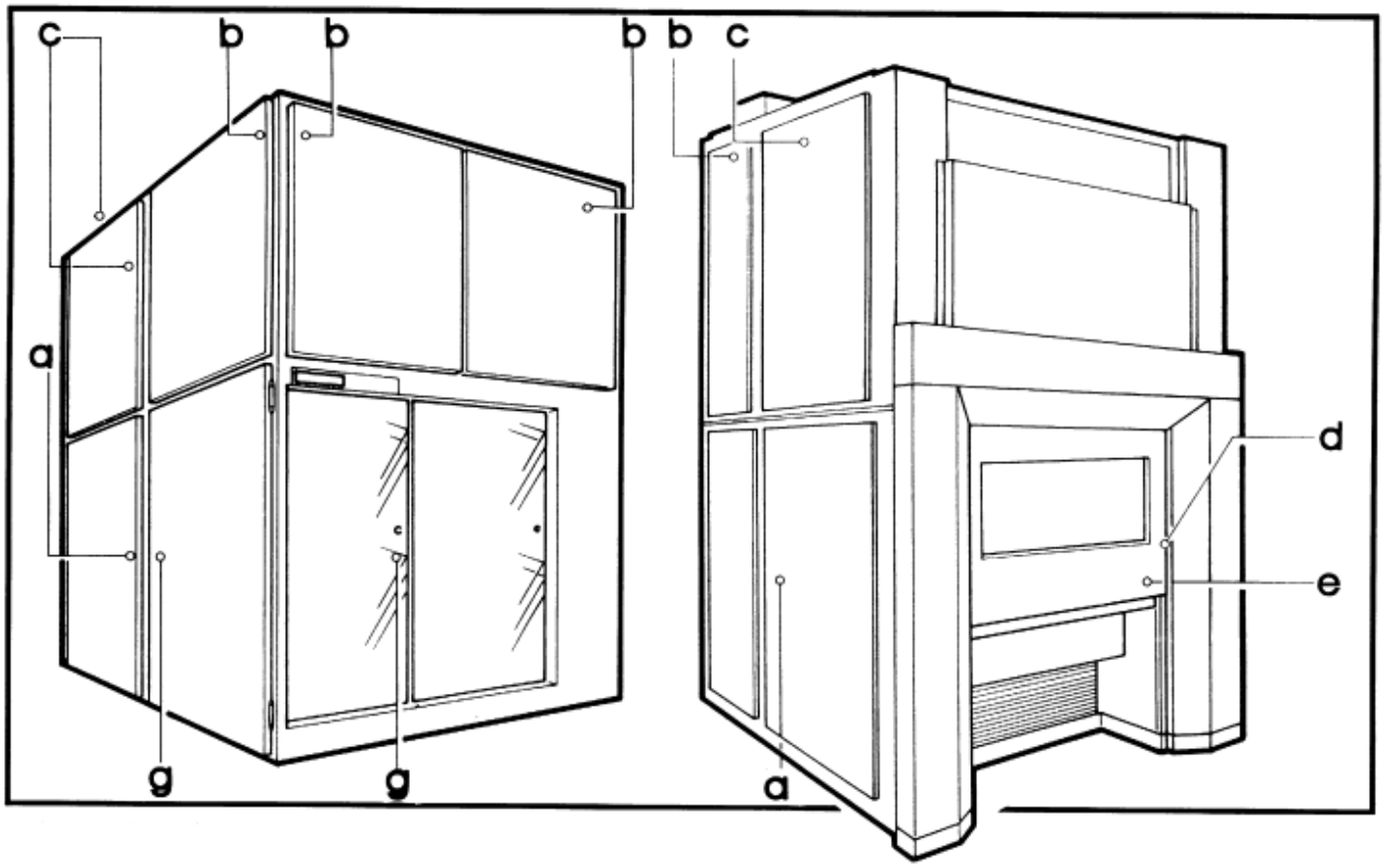

a) **MICRO-SWITCHES ON DOOR OPENING MECHANISMS**
They stop lift movement.

b) **MICRO-SWITCHES ON PANELS IN THE CONDENSER/FAN HOUSING.**
They disconnect power to the generator but **DO NOT stop the fan.**

c) **MICRO-SWITCH ON INDUCTOR ZONE INTERNAL PANELS**
It disconnects power to the generator and operates as a generator EMERGENCY STOP.

d) **ELEVATOR MICRO-SWITCH**
Stops elevator movement if the shield is not in its low position (in case of a manually raised or non-closing of the shield).

e) **WORK TABLE PHOTOCELL**
The cell stops shield descent movement if foreign bodies are present on the work table.

⚠ CAUTION

THE MICRO-SWITCH IS DISABLED IN THE MAINTENANCE MENU.

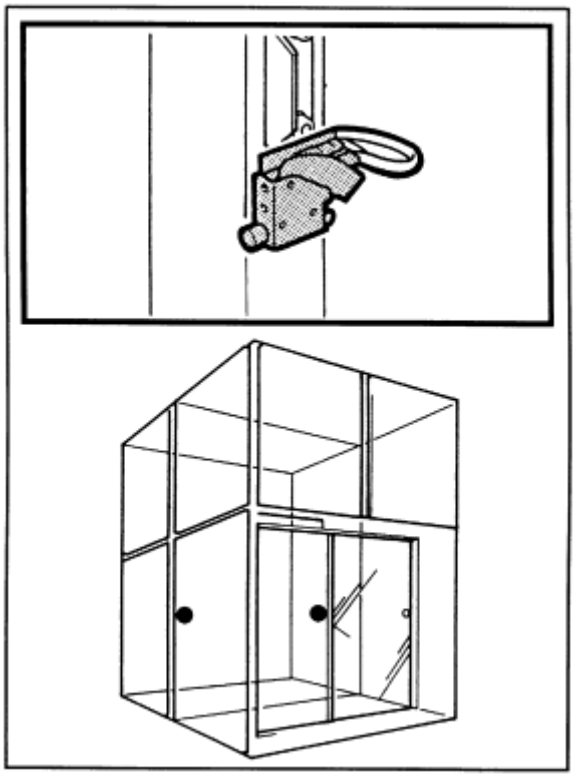

f) MICRO-SWITCHES FOR DOORS IN ELECTRONIC RACK AREA

Not safety micro-switches. They disable restart of the next production cycle, signaling that the RACK doors are open.

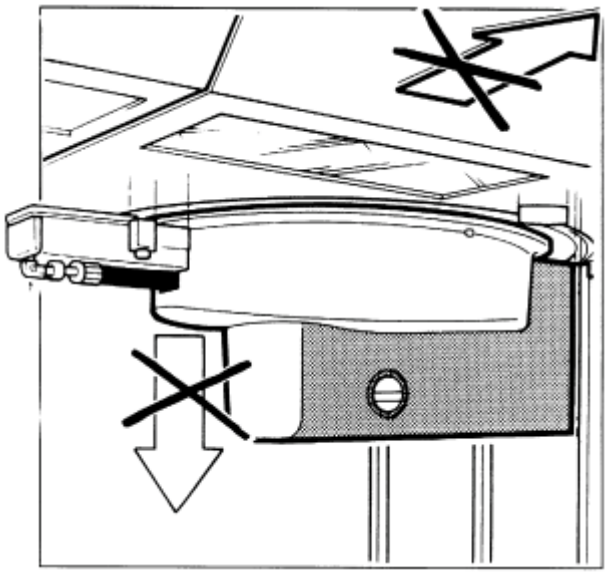

Do not attempt any work on the machine until you have replaced the guards on the rotation and closure units of the loading chamber upper section.
ENTANGLING, CUTTING and SHEARING HAZARDS.

Do not remove the warning labels affixed in various parts of the machine (see chapter “Positions of warning labels”).
If the labels are faded or damaged, replace them, asking for new ones from LPE.

L. MOTOR PROTECTION GRADE

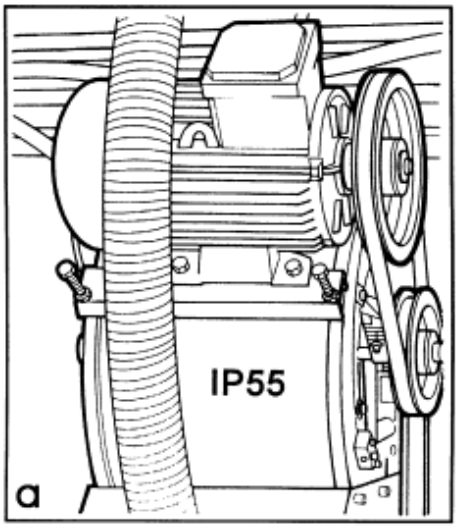

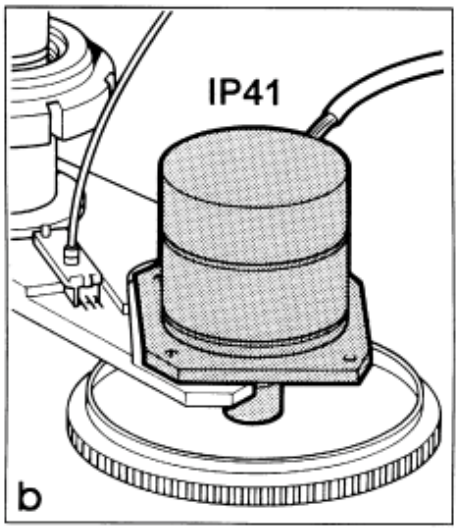

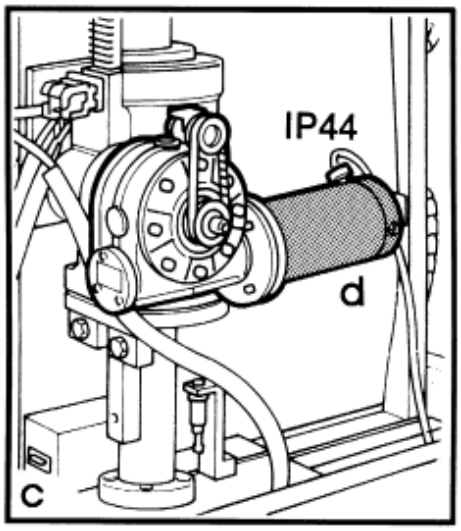

a)	FAN MOTOR	**IP55**
b)	ROTATION MOTORS (step-motors)	**IP41**
c)	ELEVATOR MOTORS (D/C brush)	**IP44**
d)	SHIELD MOTORS (D/C brush)	**IP44**
e)	FAN MOTORS (7) electronic rack	**IP20**
f)	VACUUM PUMP	**IP20**
g)	ELECTRONIC FAN	**IP44**

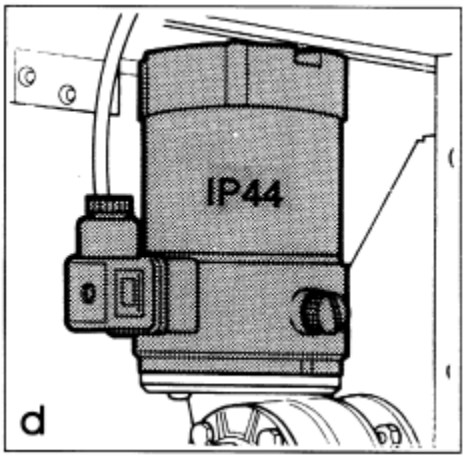

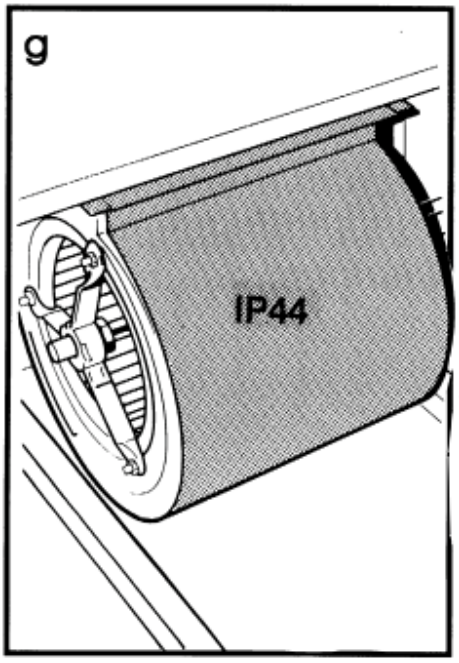

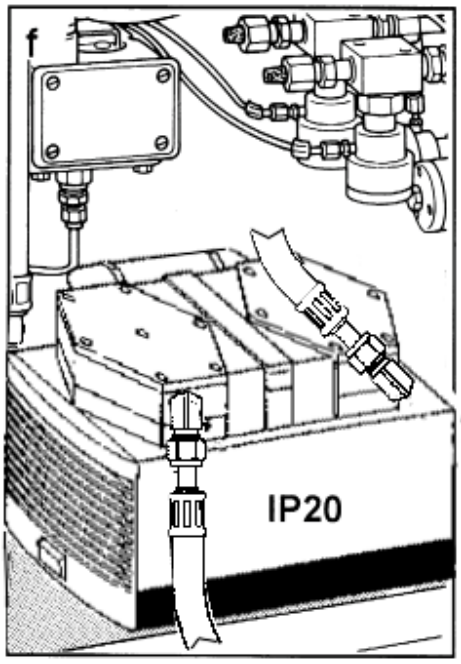

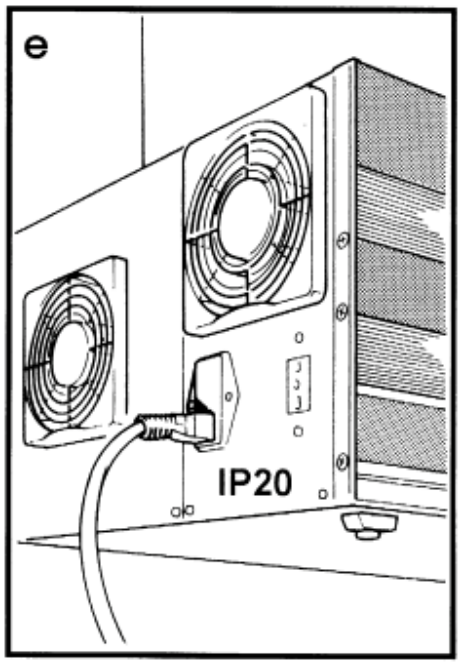

M. ENVIRONMENT CONDITIONS

Clean room

class: 10 or better

The "through-the-wall" reactor installation concept entails very limited protrusion into the clean room, to avoid any disturbance even to a laminar-flow clean room. The reactor loading station has a built-in, horizontal laminar flow (class 10 or better) creating an ideal environment that prevents wafer contamination by particles during loading/unloading. Air is drawn from the clean room through a pre-filter and is sent back there through an absolute filter to prevent perturbing clean room pressure and air flow.

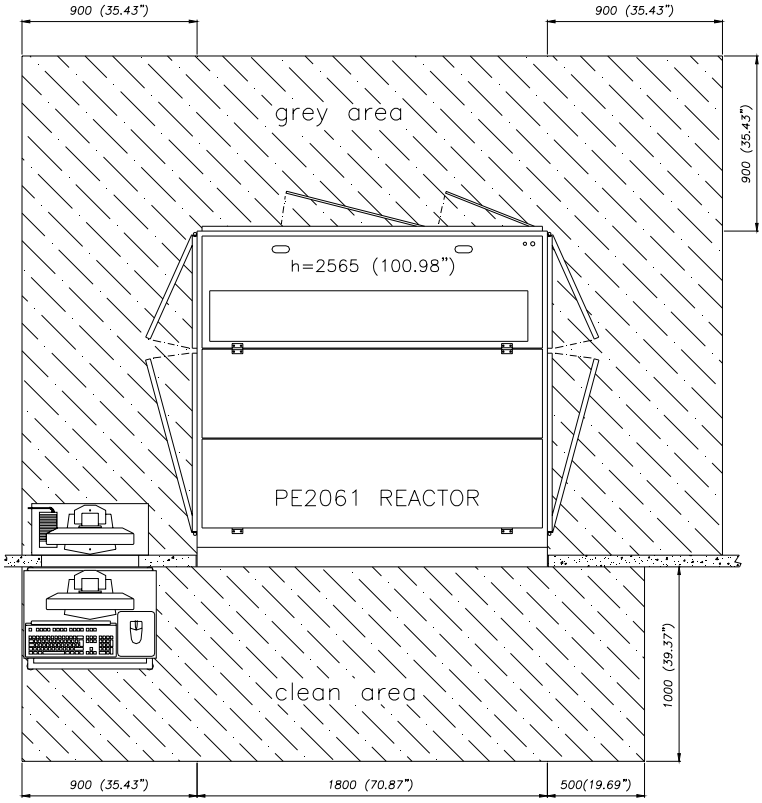

Gray area

class: <10,000

Gray room conditions are not critical to the Reactor or the Epiconverter. Nevertheless, excessive temperature, humidity or dust content may affect the reactor's life.

Suggested environmental conditions:

	Non-Operating Range min./max.		Operating Range min./max.		Target Temp.	Tolerance ±	Humidity (*) %
CLEAN ROOM	0°C (32°F)	40°C (104°F)	15°C (59°F)	25°C (77°F)	21°C (70°F)	2°C (3,6°F)	< 60
GRAY ROOM	0°C (32°F)	40°C (104°F)	15°C (59°F)	30°C (86°F)	21°C (70°F)	2°C (3,6°F)	< 60

(*) excessive humidity may reach dewpoint on water cooled parts of the reactor. Water condensation may produce rust and corrosion on metals and also on stainless steel parts.

N. HAZARDS RELATED TO CLEANING AND MAINTENANCE

After you have finished installation and maintenance work, make sure that no tools, rags or small items were left inside the machine.

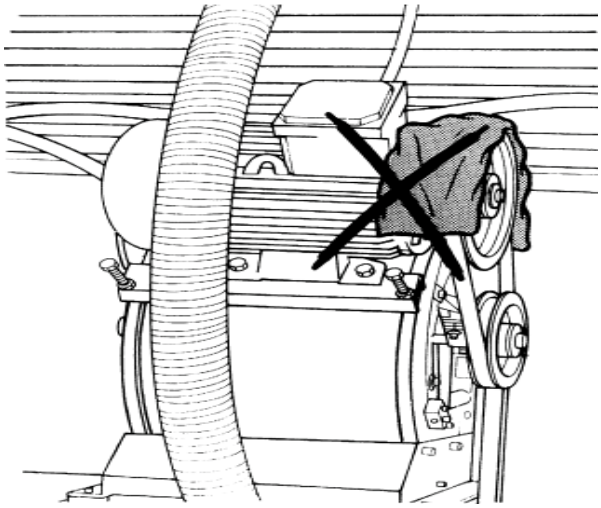

Check that the rubber tubes are perfectly tight. If these break, they may create a "whiplash" effect, ejecting water on live parts and thus causing short circuits.

- (pressure in air tubes 6-8 ATM)
- (pressure in water tubes 4 ATM)
- (pressure in gas tubes 3-4 ATM)

O. EXPLOSION HAZARD

Epitaxial reactors use hydrogen as their main gas in a high temperature environment.
An explosion hazard thus exists (in the event of a combination of air, hydrogen and high temperature). The PE 2061 epi reactor is equipped to prevent and control reaction chamber explosions, should they occur.

These means include:

- Hydrogen sensors.
- Air freshening system to prevent highly concentrated hydrogen from accumulating.
- Front shield, which must be closed when opening a station in process mode, limiting potential damage (possible drop of quartz fragments).
- Massive induction coils and shutter plates to direct pressure, generated by an explosion, upward.
- Pressure relief panels on reactor top section to vent explosions.

THE DANGER AREA is therefore limited to the lateral sections of the machine and extends to the next machine. In any event, neither operators nor maintenance persons are expected to enter this area (gray room), except during maintenance work when the machine is neither running nor in process mode.

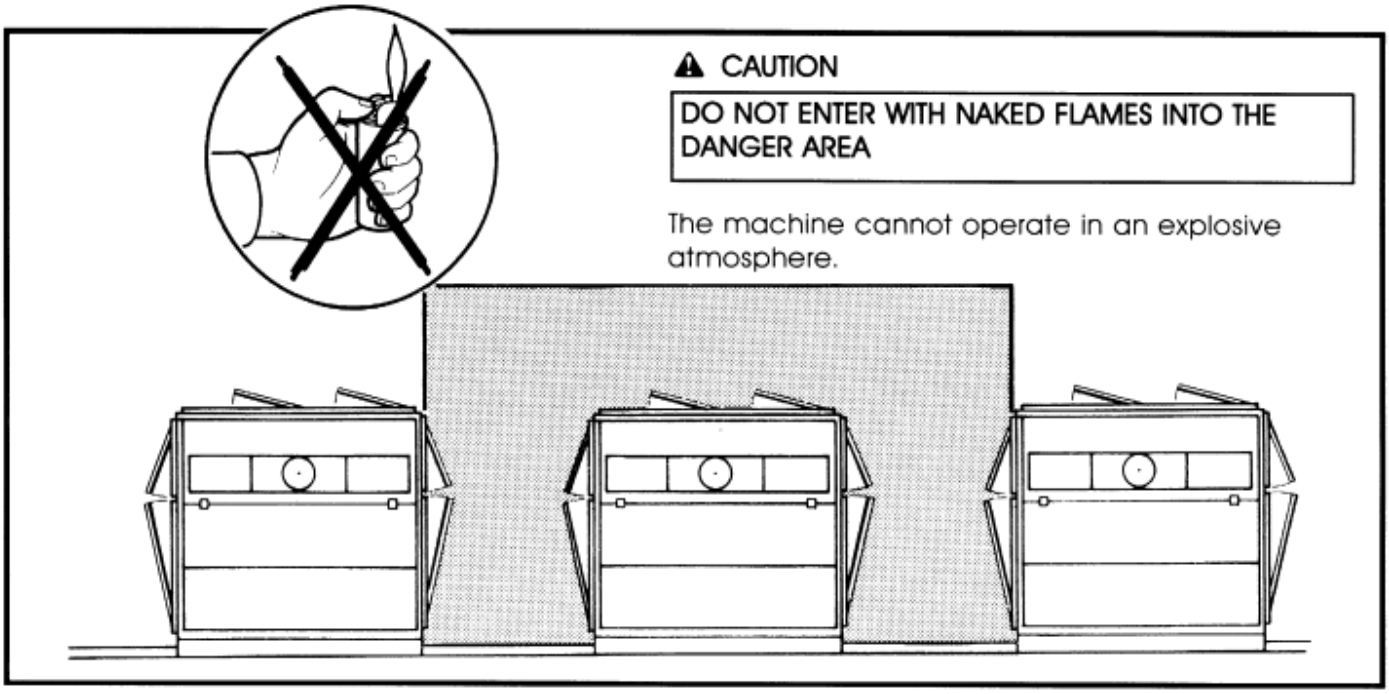

P. BELL JAR CRASH HAZARD

LPE manufactures two type of Bell Jar: **Reduced Pressure System Bell Jar** (round shoulder)
Atmospheric System Bell Jar (flat shoulder)

⚠ CAUTION

The Atmospheric Bell Jar WQ5359, MUST NOT BE USED in Reduced Pressure applications, because it will break.

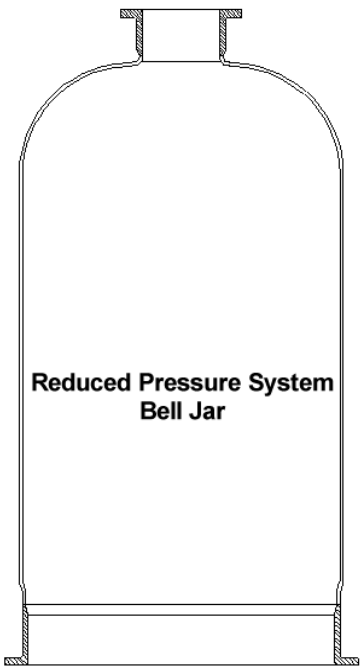

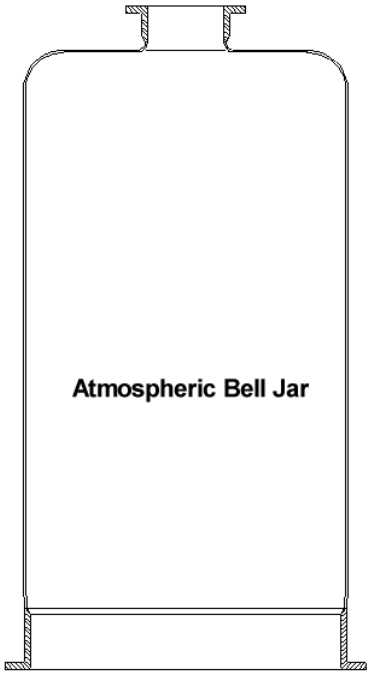

Q. STORAGE

If the machine has to be stored, the cases - fully sealed - must be covered and kept in a dry place. The temperature range of store should be from -10°C to 40 °C (14°F to 104°F).

Do not lay the cases on top of one another.

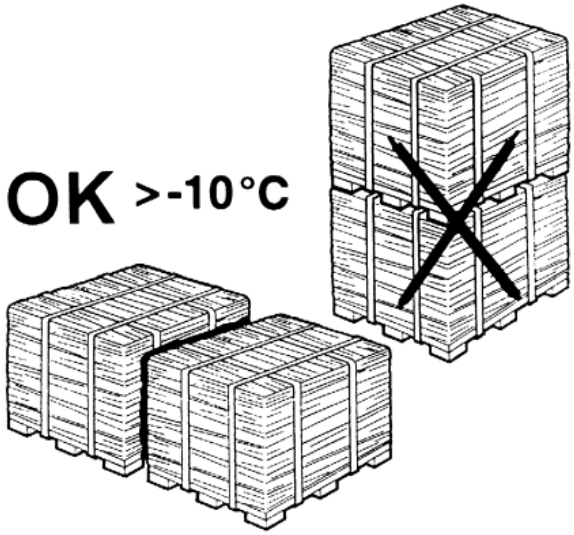

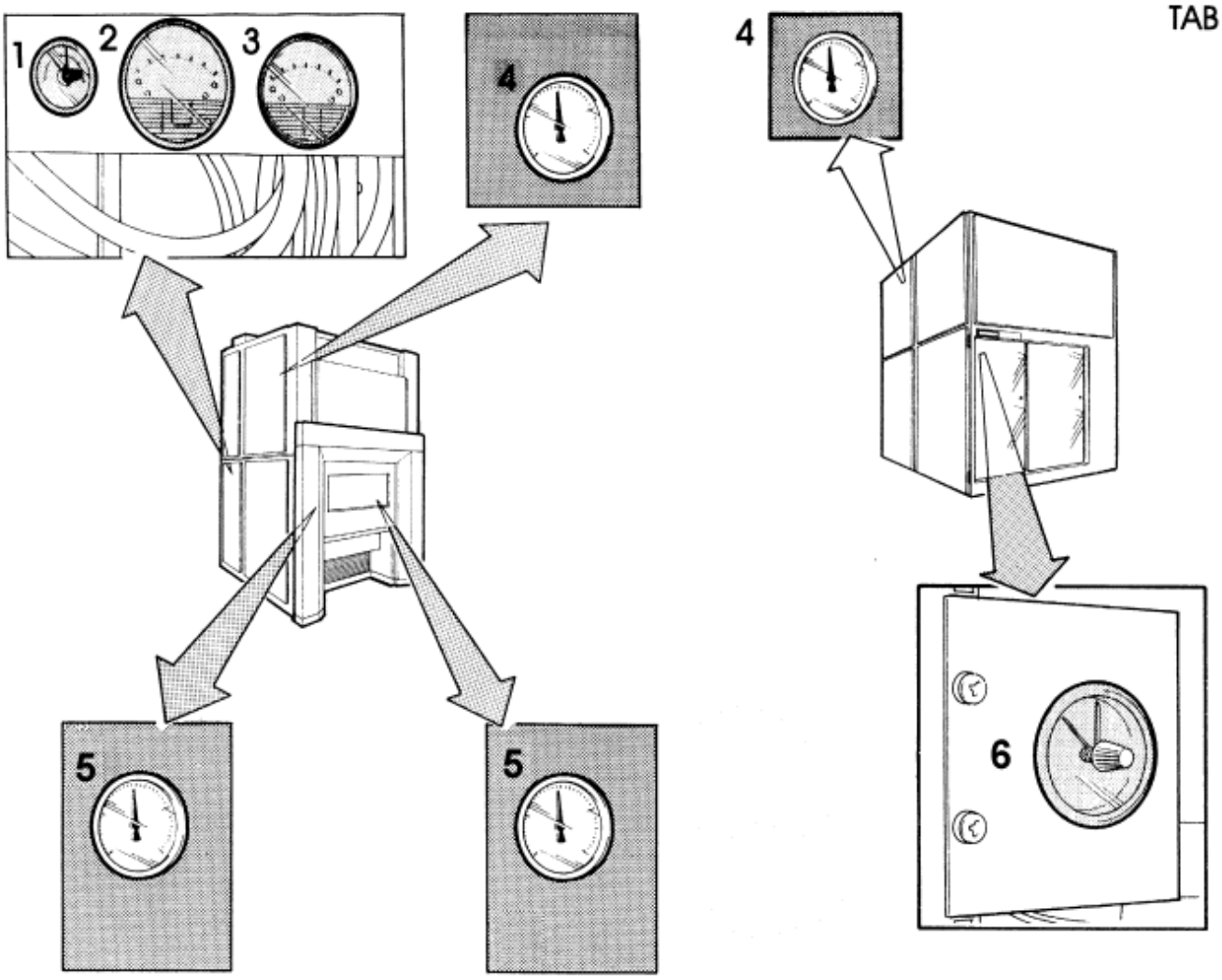

N°	Name	Ref.	Function
1	Cooling Air thermal switch **(set at 35 degrees-°C)**	Q12	Indicates temperature in ventilation area.
2	Air pressure gauge **(dwyer 2300-30 cm)**	Q15	Indicates pressure in one of the two chambers enabled for process.
3	Air pressure gauge	Q16	Indicates suction vacuum.
4	Thermometer **(A/B) (0-100 °C)**	Q49	Indicates air temperature in chamber of station **A or B.**
5	Vacuum gauge **(+/-20 mBar Ø 100 mm)**	A11	Indicates vacuum inside reaction chamber.
6	Thermal switch for control unit **(set at 30 degrees-°C)**	A85	Indicates temperature inside the control unit. If 40°C exceeded, it stops the process and switches the machine in nitrogen mode.

TAB 2

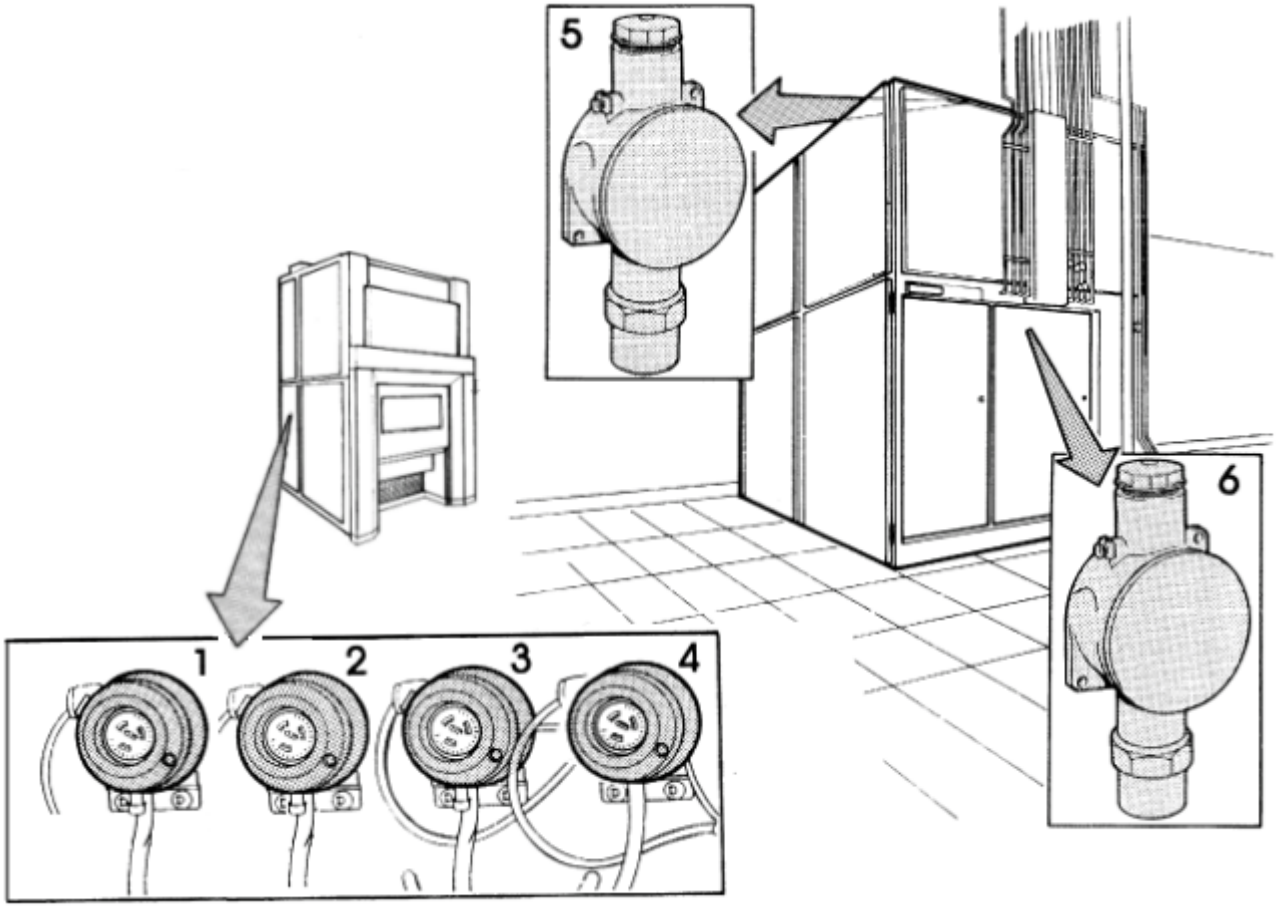

N°	Name	Ref.	Function
1	Pressure switch cooling air **(set at 2~3 mbar)**	Q26	Checks efficiency of MAIN BLOWER MOTOR and correct pressure.
2	Pressure sw spoiler **(set at 6 mbar)**	Q29	Checks if SPOILER is in its correct position (central).
3	Pressure sw laminar flow **(set at 1 mbar)**	Q28	Checks efficiency and correct flow of LAMINAR FLOW.
4	Exhaust vacuum **(set at -3 mbar)**	Q27	Checks if suction pressure is adequate.
5	Leak sensing head **WARNING (set point: 10% LEL)** **ALARM (set point: 20% LEL)**	A97	Checks for any hydrogen leaks in the ventilation and suction sections.
6	Leak sensing head **WARNING (set point: 10% LEL)** **ALARM (set point: 20% LEL)**	Inside group P	Checks for any hydrogen leaks inside the Gas panel.

TAB 3

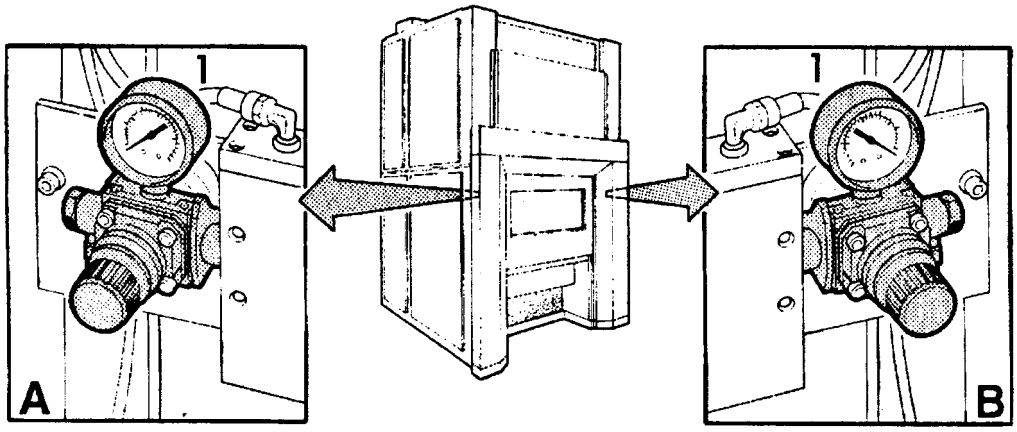

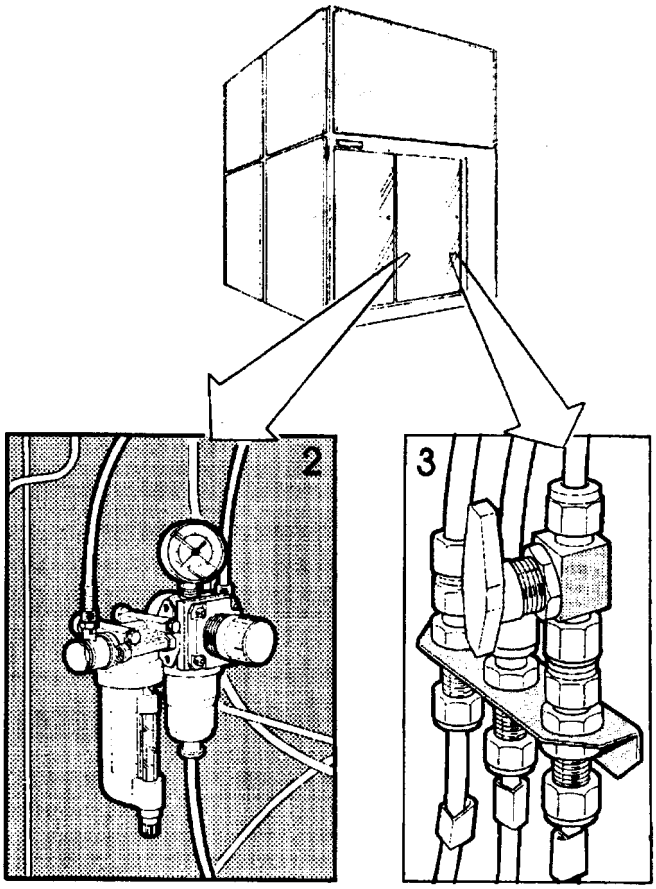

N°	Name	Ref.	Function
1	C.Air PRESSURE REGULATOR **(set at 1.2 bar) (A/B)**	B20	Indicates Clamps operating pressure
2	C.Air PRESSURE REGULATOR **(set at 6 bar) (MAIN)**	G2	Indicates pressure downline of pressure regulator
3	Manual valve	Inside Group P	Enables/disables delivery of compressed air inside reactor

TAB 4

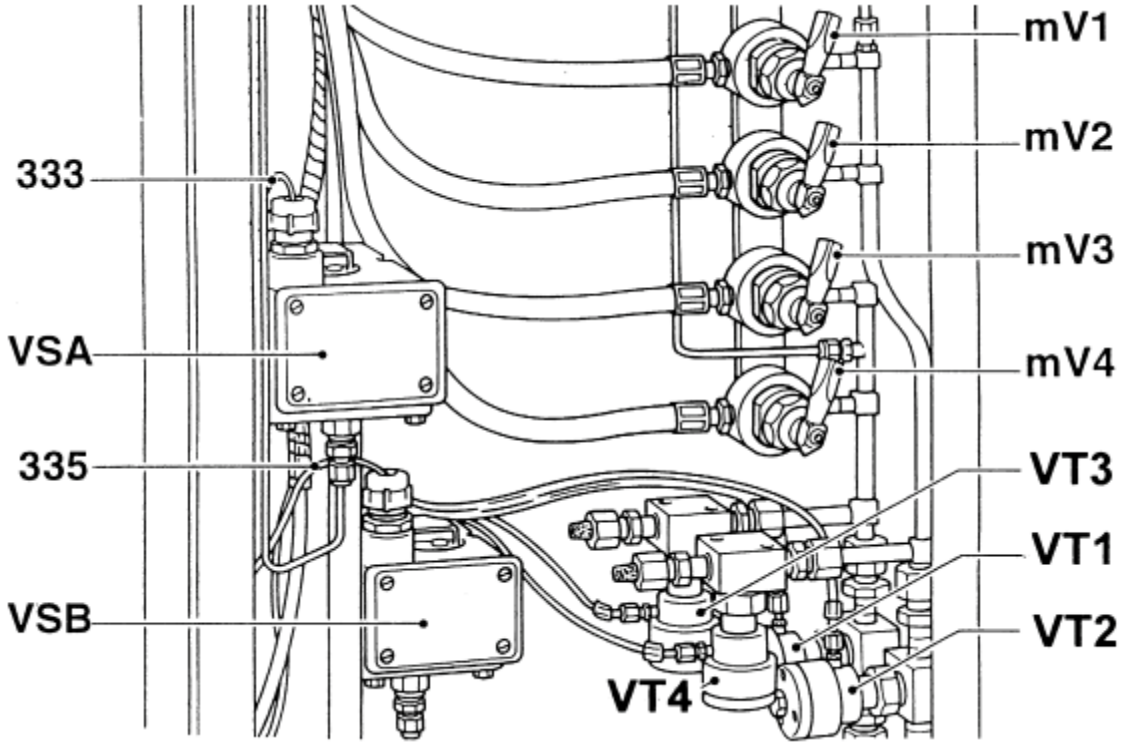

N°	Name	Roll	Function
1	(333) Connection cable	Inside gr. S	Station (A)
2	(VSA) Shutter plate vacuum switch (A)	Inside gr. S	Checks vacuum between shutter-plate O-rings and cap (A)
3	(335) Connection cable	Inside gr. S	Station (B)
4	(VSB) Shutter plate vacuum switch (B)	Inside gr. S	Checks vacuum between shutter-plate O-rings and cap (B)
5	(mV1) Manual valve	Inside gr. S	To bell-jar cap B (on/off point of vacuum system between cover (B) and pump)
6	(mV2) Manual valve	Inside gr. S	To shutter plate B (on/off point of vacuum system between cover (B) and pump)
7	(mV3) Manual valve	Inside gr. S	To bell-jar cap A (on/off point of vacuum system between cover (A) and pump)
8	(mV4) Manual valve	Inside gr. S	To shutter plate A (on/off point of vacuum system between cover (A) and pump)
9	(VT3) Valve	Inside gr. S	When the bell-jar is supplied with NITROGEN, VT3 opens and eliminates vacuum between shutter-plate and cap O-Rings (A)
10	(VT1) Valve	Inside gr. S	Creates vacuum between shutter-plate and chamber cap (A).
11	Vacuum gauge **(0~-1 bar)**	Inside gr. S	Indicates vacuum between O-Rings and shutter-plate (A)
12	(VT2) Valve	Inside gr. S	Creates vacuum between shutter-plate and chamber cap (B).
13	Vacuum gauge **(0~-1 bar)**	Inside gr. S	Indicates vacuum between O-Rings and
14	(VT4) Valve	Inside gr. S	When the bell-jar is supplied with NITROGEN, VT4 opens and eliminates vacuum between shutter-plate and cap O-Rings (B)

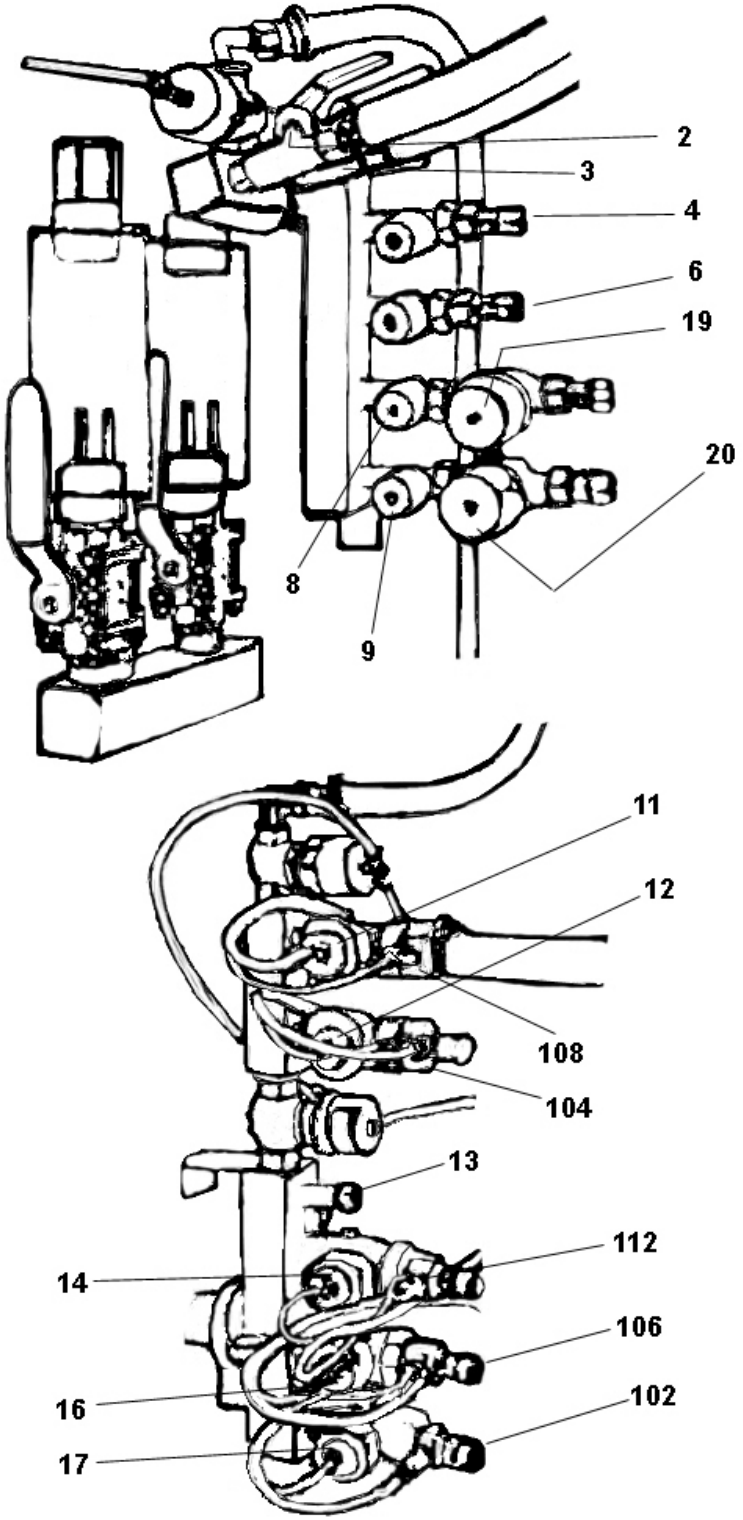
2
3
4
6
19
20
8
9
11
12
108
104
13
112
14
106
16
102
17

TAB 5

N°	Name	Ref.	Function
2	Manual valve	Inside gr. T	Delivers water to induction coil (B)
3	Manual valve	Inside gr. T	Delivers water to induction coil (A)
4	Manual regulator	Inside gr. T	Exchanger for control unit.
6	Manual regulator	Inside gr. T	Capacitor, profiling coil station A-B
8	Manual regulator	Inside gr. T	DV2-- Shutter Plate and Bell Jar Cap station B
9	Manual regulator	Inside gr. T	DV1-- Shutter Plate and Bell Jar Cap station A
11	Flow switch **(19 l)**	Inside gr. T	Induction coil B
12	Flow switch **(19 l)**	Inside gr. T	Induction coil A
13	Connection	Inside gr. T	Exchanger for control unit
14	Flow switch **(4 l)**	Inside gr. T	Capacitor, profiling coil station A-B
16	Flow switch **(4 l)**	Inside gr. T	Shutter Plate and Bell Jar Cap station B
17	Flow switch **(4 l)**	Inside gr. T	Shutter Plate and Bell Jar Cap station A
19	PVB valve	Inside gr. T	Normally open valve - water shut-off -shutter-plate (B) in NITROGEN mode
40	PVA valve	Inside gr. T	Normally open valve - water shut-off -shutter-plate (A) in NITROGEN mode
108-102	Thermostats **(65 °C)**	Inside gr. T	Overheating

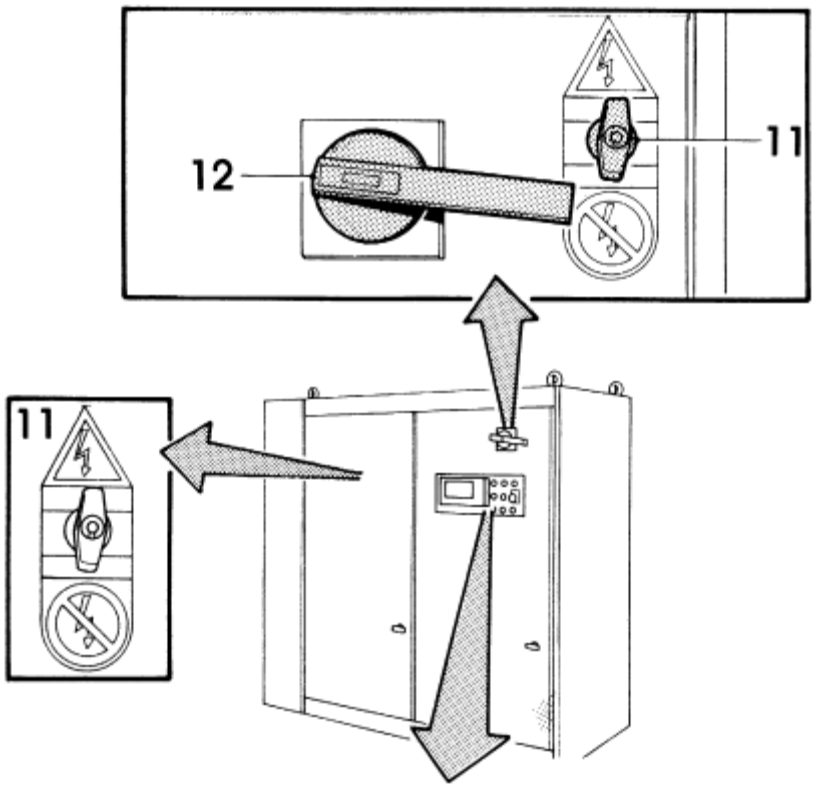
12
11
11

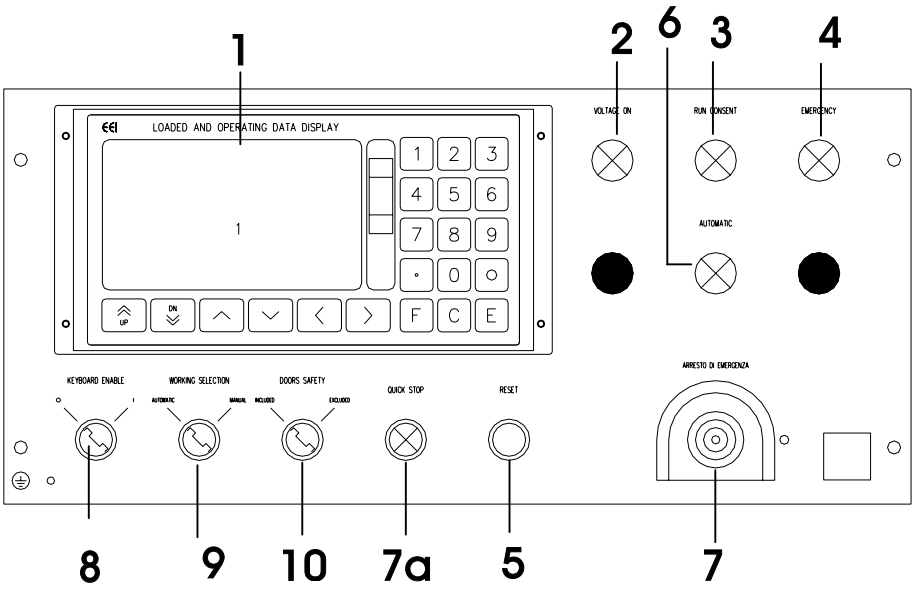
1
2
6
3
4
LOADED AND OPERATING DATA DISPLAY
VOLTAGE ON
RUN CONSENT
EMERGENCY
AUTOMATIC
KEYBOARD ENABLE
WORKING SELECTION
DOORS SAFETY
QUICK STOP
RESET
ARRESTO DI EMERGENZA
8
9
10
7a
5
7

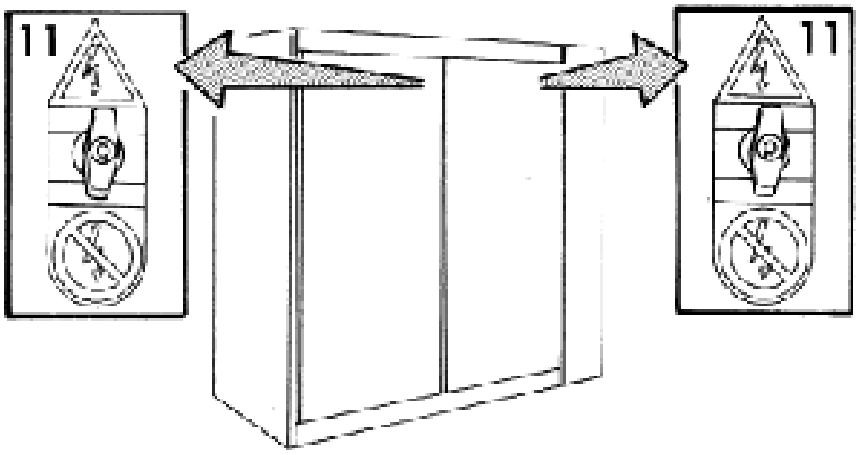
11
11

TAB 6

N°	Name	Function
1	(LCD) Liquid crystal display	Displays power generator statuses and operating values
2	Voltage (indicator)	Indicates presence of voltage on power generator line
3	Run consent (indicator)	Indicates power generator START-UP enable
4	Emergency (indicator)	Indicates alarm status
5	Reset (push-button)	Resets alarms after an emergency
6	Automatic working (indicator)	Indicates automatic work mode
7	Emergency (dome-head push-button)	Activation of the Generator Emergency Power Off switch will cause: **1** - Opening of the generator main switch **2** - Induction coils are no more energized but power supply to generator is maintained. **3** - Reactor power is maintained . **4** - Reactor alarm level H is triggered . **5** - Cooling air is maintained . **6** - Cooling water is maintained.
7a	Quick Stop (push button)	Activation of the Generator Emergency Power Off switch will cause: **1** - Induction coils are no more energized but power supply to generator is maintained. **2** - Reactor power is maintained . **3** - Reactor alarm level H is triggered . **4** - Cooling air is maintained . **5** - Cooling water is maintained.
8	Date set enable (selector)	Enables access to configuration pages
9	Work mode selection (selector)	Selects MAN/AUTO work mode.
10	Doors safety (selector)	Disables door safety devices
11	Key switch for doors (4)	Door opening/closing safety device (combined with selector **10,** it enables people to do maintenance work inside the power generator while powered)
12	Master switch	Powers up the generator

In any case, for more reference see Generator manuals.

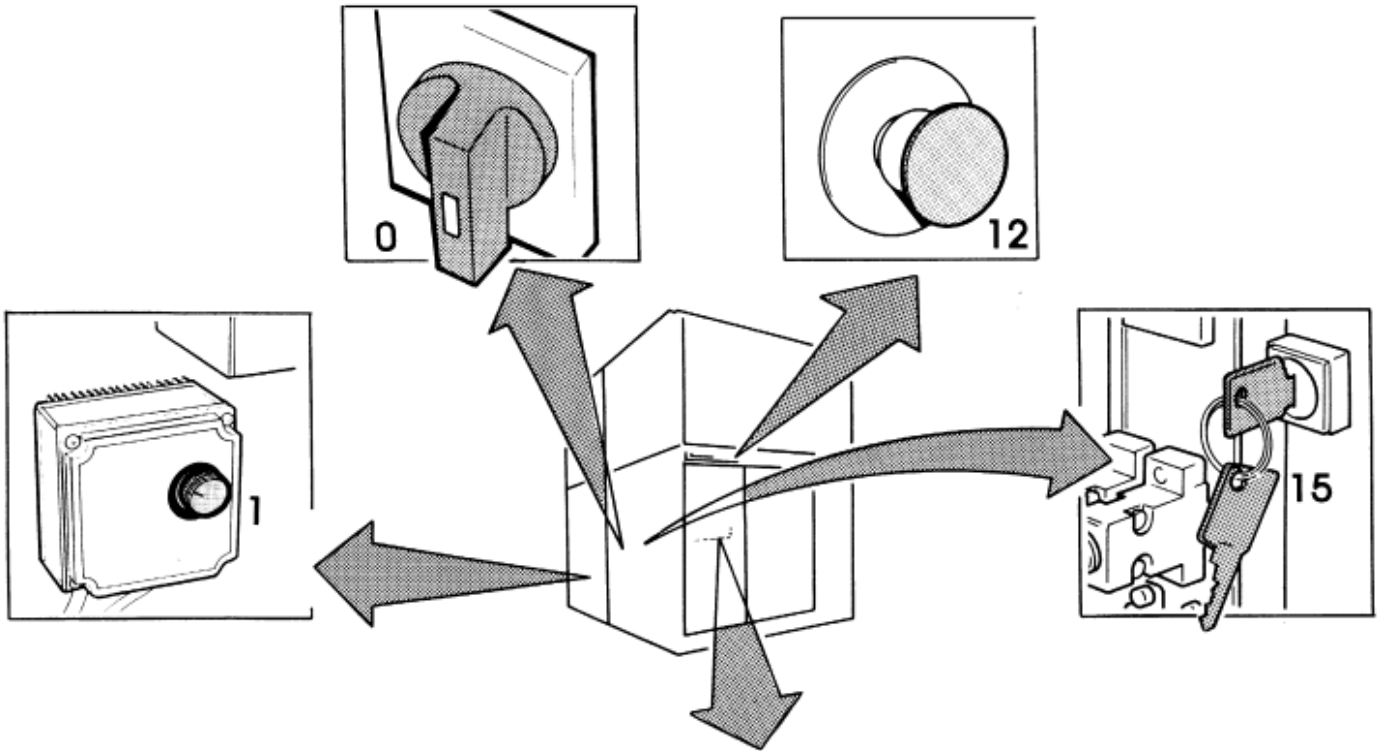
0
12
1
15

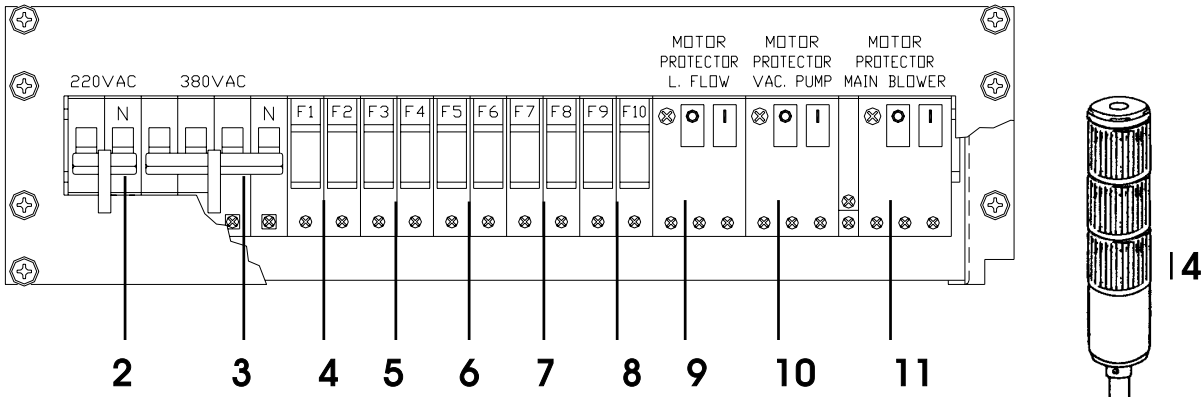
220VAC
380VAC
N
N
F1
F2
F3
F4
F5
F6
F7
F8
F9
F10
MOTOR PROTECTOR L. FLOW
MOTOR PROTECTOR VAC. PUMP
MOTOR PROTECTOR MAIN BLOWER
2
3
4
5
6
7
8
9
10
11
14

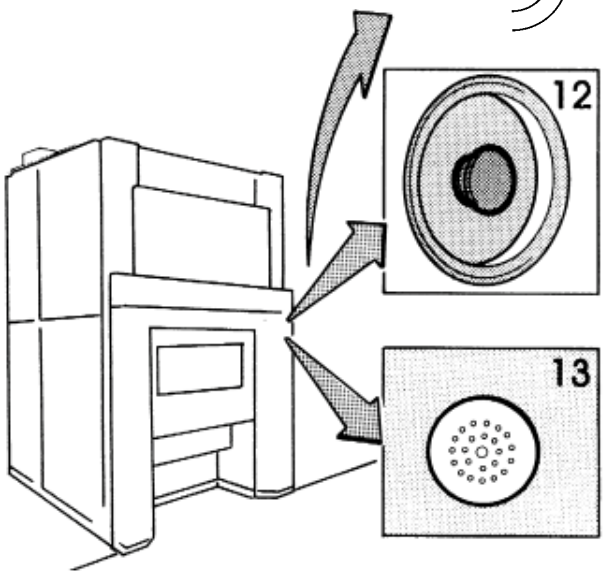
12
13

TAB 7

N°	Name	Ref.	Function
0	Main-switch	A32	Reactor main disconnecting switch
1	Regulator	A25	Controls laminar flow air flow speed
2	Switch 230VAC (or other voltages)	QF1114D	Supplies power to fans, control unit and power supplies.
3	Switch 400VAC (or other voltages)	QF1112D	Suppliers main blower, laminar flow and vacuum pump
4	Fuse F1÷F2	QU146C	Fuse for fans
5	Fuse F3÷F4	QU148C	Fuse for fan cooling unit
6	Fuse F5÷F6	QU141C	Fuse for supply rack VME
7	Fuse F7÷F8	QU136C	Fuse for transformer 1
8	Fuse F9÷F10	QU152C	Fuse for transformer 2
	Fuses F11÷F12 (**only for US version**)		Fuse for transformer 4 and 5
9	Switch (mot. prot. - laminar flow)	QM1212D	Protection laminar flow
10	Switch (mot. prot. - vacuum pump)	QM1214D	Protection vacuum pump
11	Switch (mot. prot. - main blower)	QM126D	Protection main fan
12	Emergency button	A31	Activation of the Reactor Emergency Power Off will cause: **1** - All power in the reactor is turned off **2** - Nitrogen purge begins (through a normally open valve) **3** - Induction coils are no more energized but power supply to generator is maintained **4** - Reactor cooling air is turned off Activation of the Reactor Emergency Power Off button will require manual restarting of the reactor and can result in damage to epi wafers and reactor.
13	Buzzer	A35	IN MAINTENANCE MODE: it is sounded intermittently before and during entire movement of rack IN OPERATION MODE: **intermittent sound**: a station is ready to be unloaded; **continuous sound**: alarm or warning status.
14	Light pole (on clean room wall)	---	Has 3 positions: **GREEN:** machine running, a cycle has been started; **STEADY YELLOW**: machine powered but not operating; **FLASHING YELLOW**: at least 1 station may be unloaded; **RED**: alarm, code and description shown on DISPLAY.
15	Release key	X15	Reactor power up. Enables start of control system

REFERENCE GUIDE TO THE DRAWINGS MENTIONED IN THIS CHAPTER

- **RH4276/D** — **Rack VME group**
- **RH4828U2 - U3** — **A.C. Power input/drivers**
- **RH4849U4** — **Water schematic cooling system**
- **RH5004U1** — **Locked group**
- **RH5040U2** — **Compr. air inlet distribution**
- **RH5070U1** — **Air group**
- **RH5090U1** — **Vacuum test group (scheme)**
- **RH5090U2** — **Vacuum test group (lay out)**
- **RH5100U2 - RH5145U1** — **Typical lay out gas metering**
- **RH5200U1 - U2** — **Reactor components/groups**

(THE DRAWINGS ARE AT THE VOLUME 3 - CHAPTER 26)

CONNECTIONS SEQUENCE:

1.1 Hydraulic
1.2 Pneumatic
1.3 Nitrogen
1.4 Discharge (exhaust gases/suction)
1.5 Electrical
1.6 Gas

⚠ CAUTION

AS THE FOLLOWING CONNECTIONS ARE THE RESPONSIBILITY OF THE FACTORY IN WHICH THE MACHINE IS INSTALLED, THEY MUST BE CARRIED OUT BY SPECIALIZED PERSONNEL APPOINTED BY THE CUSTOMER UNDER ITS OWN RESPONSIBILITY.

⚠ CAUTION

BEFORE CARRYING OUT ANY CONNECTIONS, MAKE SURE THAT ALL LIQUIDS SUPPLY ON/OFF LINES, ARE SHUT (WATER, AIR, GAS, ELECTRICITY).

1.1 HYDRAULIC

WARNING

ONLY FOR PE2061

Connect water at points **W1-W2-W3-W4** as shown in the Installation Specifications drawings and observing the instructions of the Specifications table.

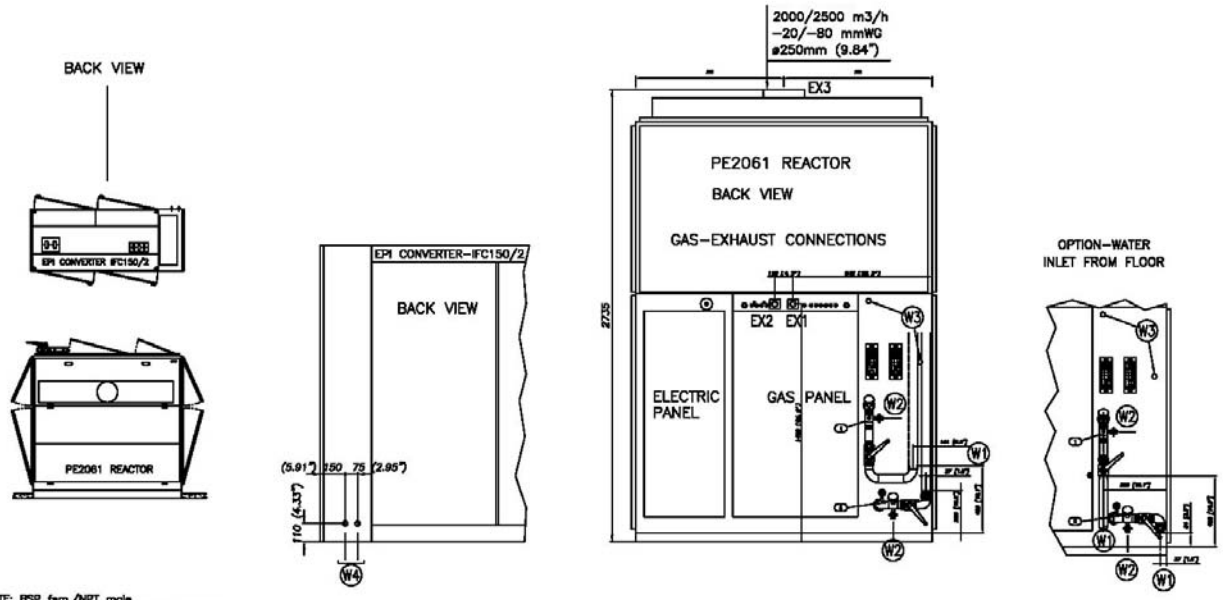

NOTE: BSP fem./NPT male
Conversions are supplied on request

WATER CONNECTIONS PE 2061S			
POS	SIZE	TYPE	FLOW
W1	1 1/2" BSP fem.	COOLING WATER SOFTENED	120-200 l/min
W2	3/8 BSP fem.	DRAIN	
W3	1/2" BSP fem.	EMERGENCY CITY WATER	50 l/min (optional)
W4	3/4" BSP fem.	COOLING WATER SOFTENED	20+40 l/min

WARNING

ONLY FOR PE2061S

Connect water at points **W1-W2-W3-W4** as shown in the Installation Specifications drawings and observing the instructions of the Specifications table.

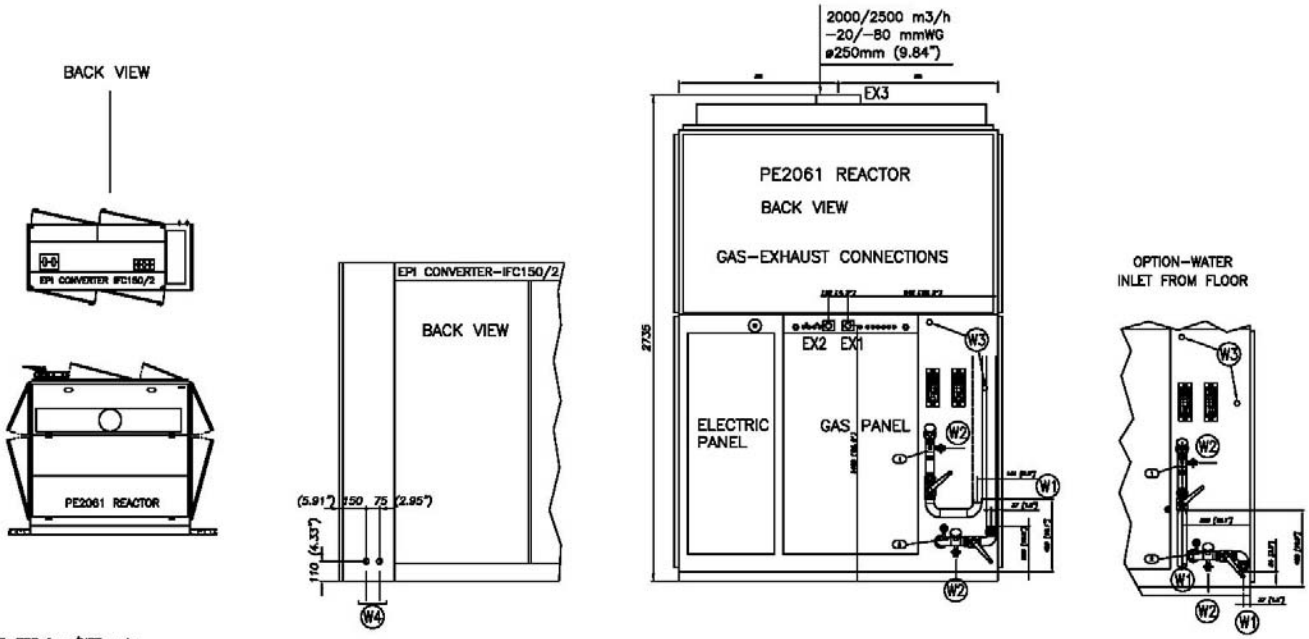

NOTE: BSP fem./NPT male
Conversions are supplied on request

WATER CONNECTIONS PE 2061S			
POS	SIZE	TYPE	FLOW
W1	1 1/2" BSP fem.	COOLING WATER SOFTENED	120-200 l/min
W2	3/8 BSP fem.	DRAIN	
W3	1/2" BSP fem.	EMERGENCY CITY WATER	50 l/min (optional)
W4	3/4" BSP fem.	COOLING WATER SOFTENED	20+40 l/min

⚠ CAUTION

The emergency water system built in the Reactor (optional), is designed to operate when the main electrical power supply, or the cooling feedwater, o the compress air to Reactor will go off.

When the "Emergency water circuit" is active, the emergency city water is mixed with the cooling water softened, therefore after the emergency operating, purge the cooling water system by the city water.

1.2 PNEUMATIC CONNECTIONS AND SERVICES

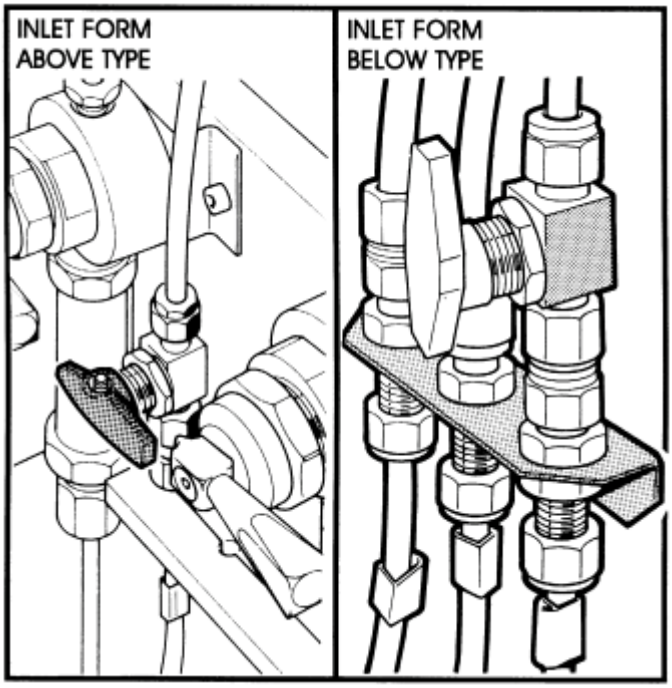

1.2.1 Connect compressed air supply to the valve in the gas panel, making sure there are no leaks on the line.

1.2.2 Connect the compressed air (tube 1/8") from Reactor (COMP. AIR BBL1/BBL2) to valve VBBL on the Bubblers.

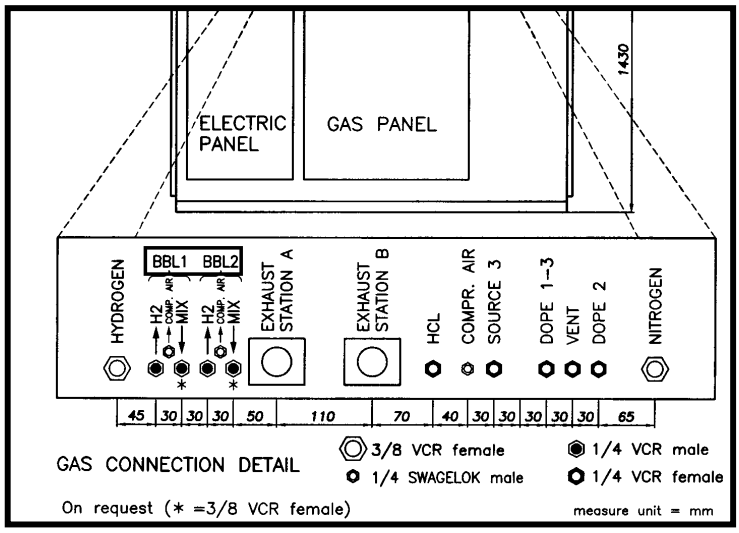

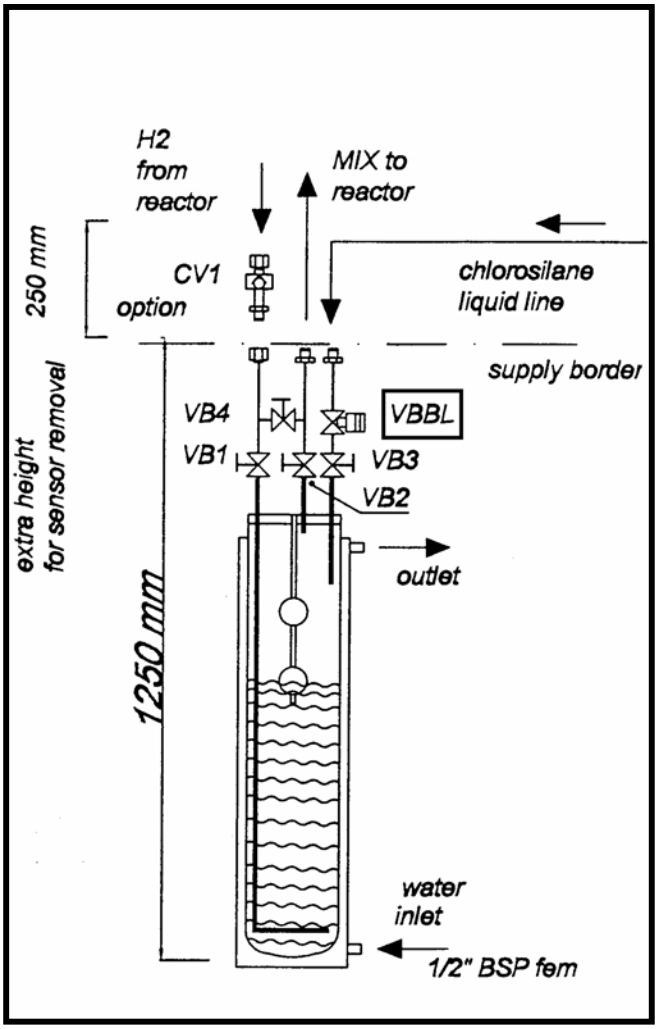

1.3 NITROGEN

The nitrogen line should be among the first to be connected, to provide flow to the GAS-PANEL and the tubes delivering gas to the bell-jar.

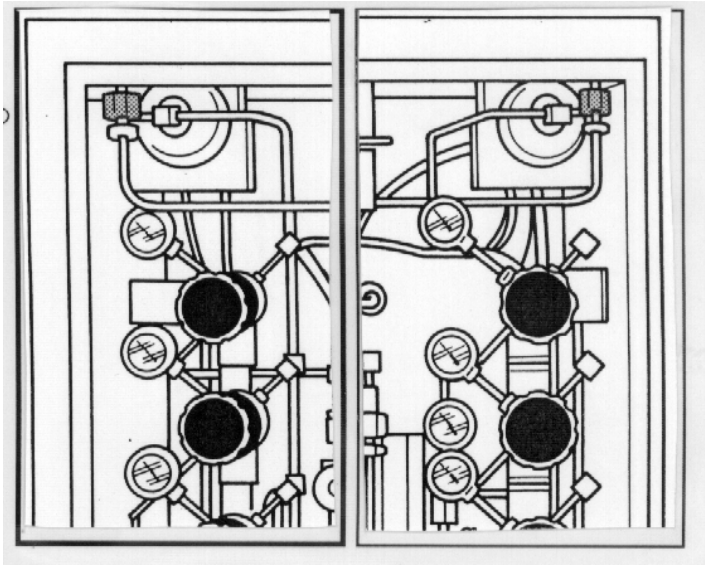

1.3.1 As soon as you have connected it, open the **HV3** valve and set the regulator **PR3** to **1 bar.**

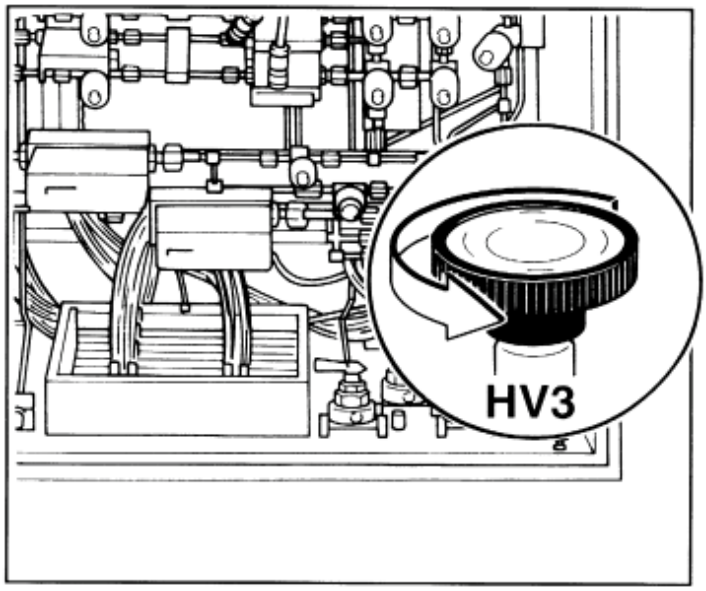

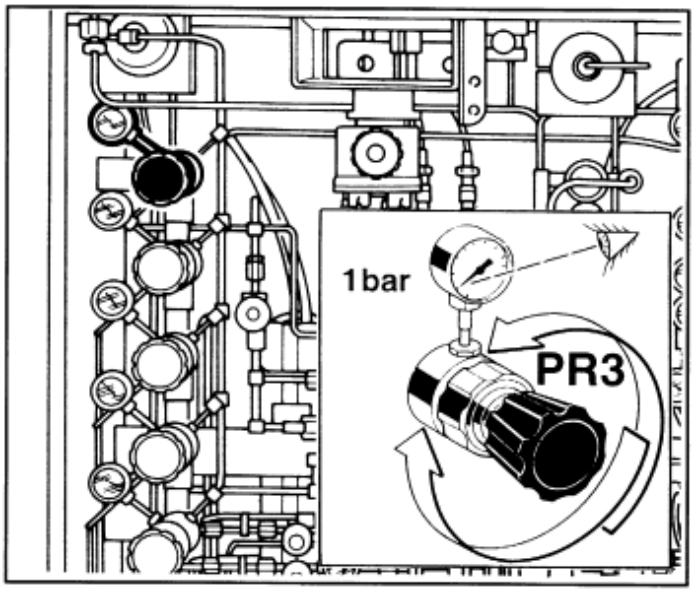

1.4 DISCHARGES (EXHAUSTED GASES/AIR SUCTION)

The user is responsible for making the connections to the smoke scrubbing system.
Connections should be executed according to the Installation Specifications drawings and to the instructions of the Specifications tab.

1.5 ELECTRICAL

Reactor (internal connections)

1.5.1 Connect ground wire (PE) to **only** one of the points shown in the figure according to cable entry point, using a copper cable with minimum cross-section of **75 mm²**.

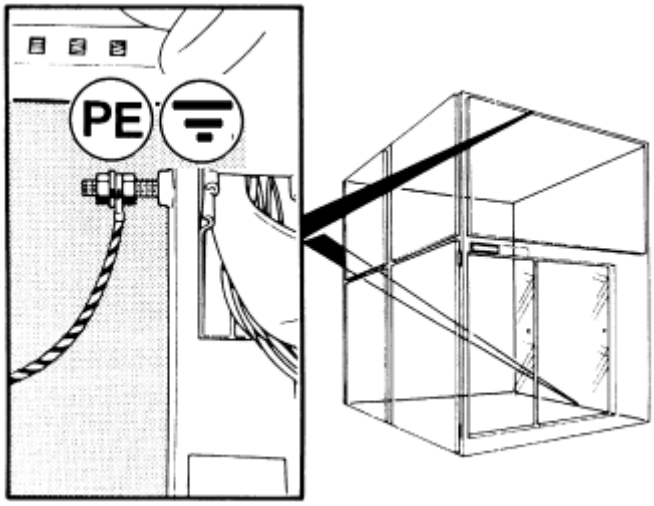

The **400V** (or other voltages) **power supply cables** enter to Reactor from above or below (according to Customer's installation scheme):

- the cables must be directly connected to the MAIN SWITCH contacts (A-32).
- connect the cables (3 phases + N) to the terminals marked by **400/L1 - L2 - L3 - N** (for UE version)
- connect the cables (3 phases + without N) to the terminals marked by **Volt/L1 - L2 - L3** (for US version)

The **230V** (or other voltages) **power supply cables** must be connected to **UPS input** (on workstation table - IEC plug)

- connect to Workstation input a cable from a UPS output (IEC plug)
- connect to Reactor directly to the MAIN SWITCH contacts (A-32 - to terminals marked by **230/L - N** for UE version, **Volt/L0 - L1** for US version) a cable from another UPS output (IEC plug/cable terminal).

For the connections, use the cables with the size in according with local code.

To keep the EMI Conformity valid, LPE recommends to use the power supply screened cables, with the screen connect to ground.

NOTE: follow the sequence of the phases.

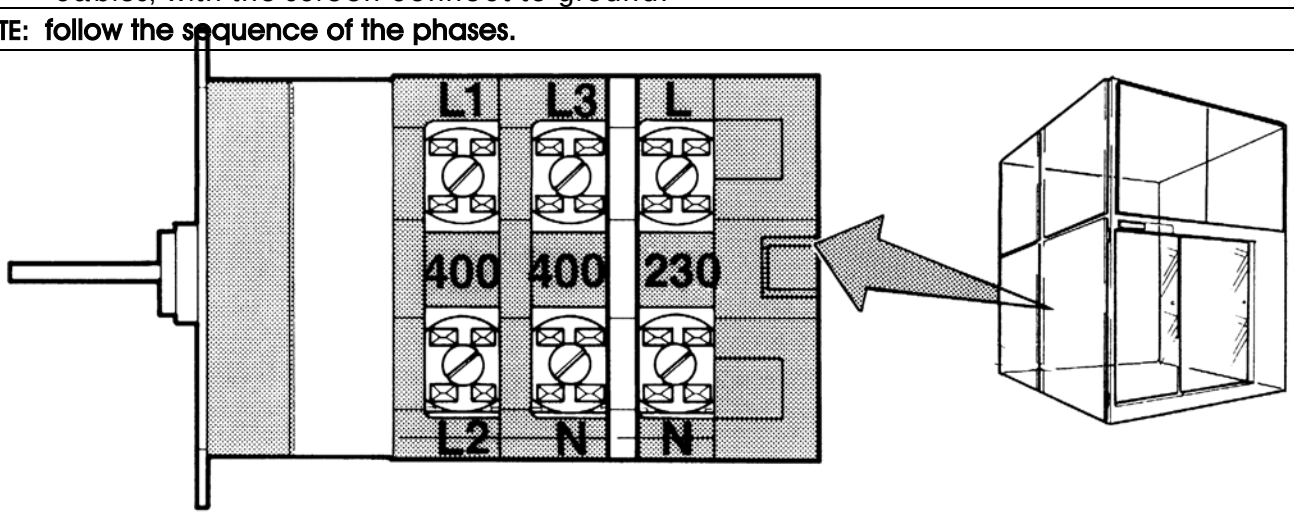

1.5.2 Power generator

The power generator is set in the factory to the voltage declared by the customer.

Connect the ground cable to the equipotential bar, using cables with minimum cross-section of **75 mm²**, for mod. **PE2061** and **150 mm²** for mod. **PE2061S**

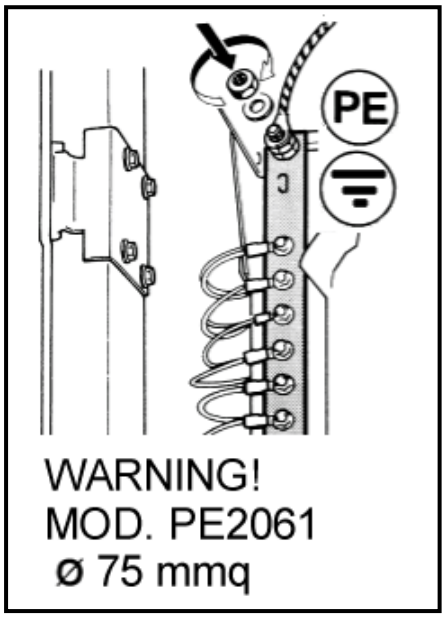

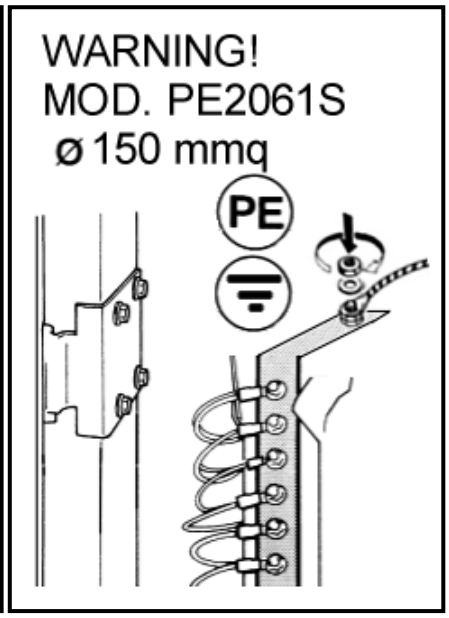

Route the voltage cable in from above and connect it to the master switch bars.

Using the cables with the size in according with local code.

To keep the EMI Conformity valid, LPE recommends the laying of the power supply cables into a closed metal raceway, grounded at the both ends.

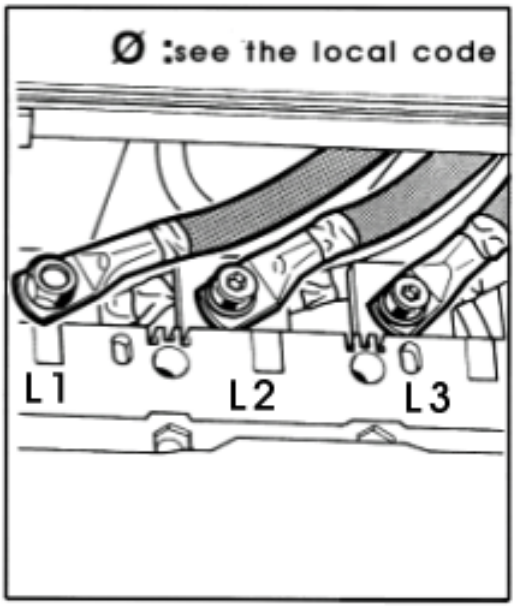

WARNING

RE-FIT THE CABLES HALF PHATES.

The Epiconverter is supplied with the connection on the transformer for the customer supply voltage. We suggest in any case to verify the correct voltage to the Epiconverter connection.

HARDWARE

The table below describes how you must connect correctly the generators IFC-150 to the power mains for different voltages of operation,

Table of the connections to be performed on the transformer : EA-TM10, EA-TM102, EB-TM05 according to the power supply voltage

V_{line} (V)	Transformer Primary voltage
480 / 460	480
440	440
415	415
400	400

SOFTWARE

In the videokeyboard set the correct value as in following table

V_{live}	S 65 SetVolt	29 Line MIN V	30 Line MAX V	27 VacMINal	28 VacMAXal
	Pag. 24	Pag. 22 *(585.CF CARD SETUP)*		Pag. 13 *(450.D3 CARD SETUP)*	
480 [V]	*580*	*432*	*528*	*432*	*528*
460 [V]	*560*	*414*	*506*	*414*	*506*
440 [V]	*540*	*396*	*484*	*396*	*484*
415 [V]	*540*	*373*	*456*	*373*	*456*
400 [V]	***500***	***360***	***440***	***360***	***440***

In the videokeyboard set the correct value as in following table

Frequency [Hz]	I_02
	Pag. 19 *(585.CF CARD SETUP)*
50	*0*
60	*1*

1.5.3 Power generator (coaxial cables)

The 4 coaxial cables must be routed through enclosed ventilated metal raceways with ground connected at the two ends.

Cable weight : 2.3 kg per linear meter
Ø cable : 35 mm
Curve minimum radius: <350 mm

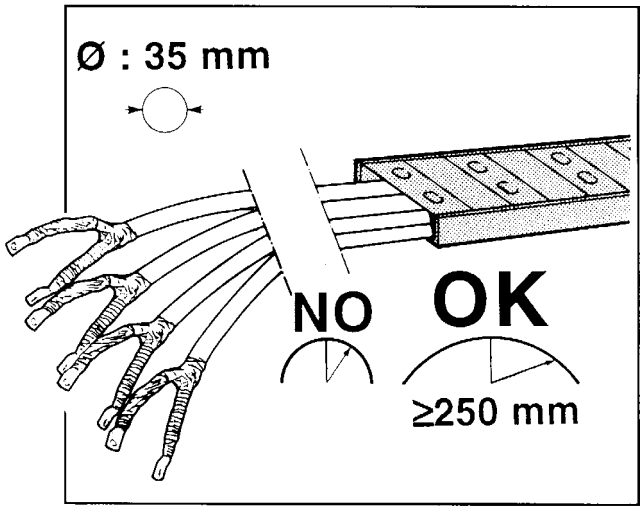

1.5.4 Workstation

Check, if present, that the voltage selector has been settled in accordance with the local power supply(from UPS)

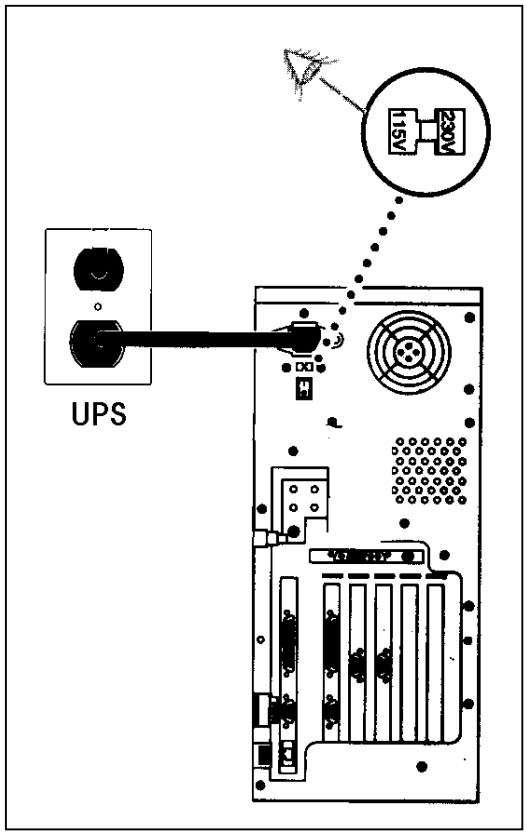

1.5.5 Monitor

Connect the Monitor alimentation cable between the UPS output and the connector on the back of the monitor

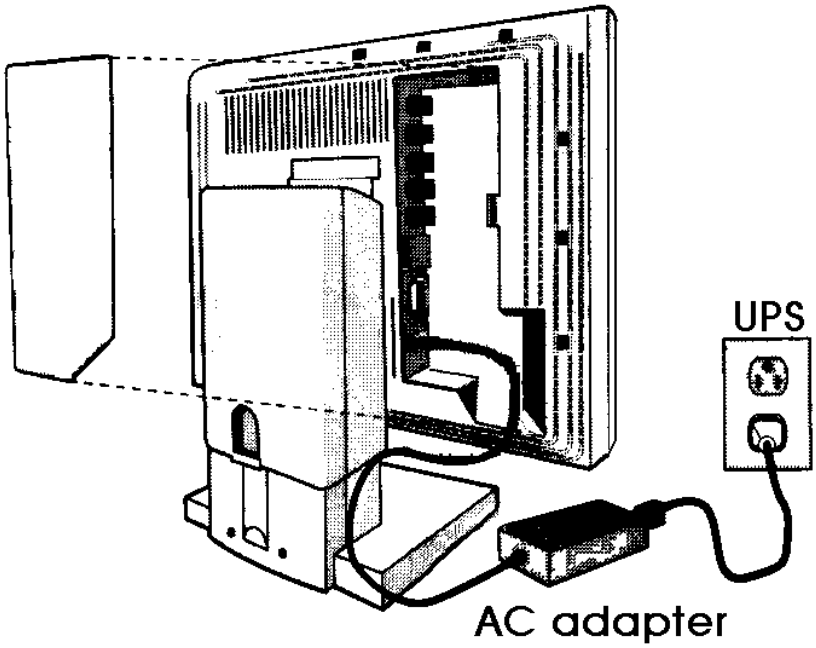

1.6 Gas

Check if all inlet valves are shut.

⚠ CAUTION

DO NOT OPEN THE VALVES FITTED TO THE GAS METERING UNIT UNTIL THE CUSTOMER HAS CHECKED THE SUPPLY LINES, AND QUARTZ ELEMENTS HAS CHECKED THE SUPPLY LINE TIGHTNESS BEEN INSTALLED.

Connect the gas as shown in the Installation Specifications drawings observing the dataplates affixed to each connector.

WARNING

BEFORE ASSEMBLING THE QUARTZ AND GRAPHITE ELEMENTS, CARRY OUT THE NECESSARY CHECKS (SEE PRELIMINARY CHECK PROCEDURES CHAPTER).

REFERENCE GUIDE TO THE DRAWINGS MENTIONED IN THIS CHAPTER

- **RE4196** — **Chlorosilane Bubbler**
- **RH5250.U4** — **PE2061 - Water/air exhaust connecting points**
- **RH5250.U5** — **PE2061 - Gas connections**
- **RH5250.U6** — **PE2061 - Electrical connections**
- **RH5250.U14** — **PE2061S - Water/air exhaust connecting points**
- **RH5250.U15** — **PE2061S - Gas connections**
- **RH5250.U16** — **PE2061S - Electrical connections**
- **RH5200U1** — **Reactor components/groups**

(THE DRAWINGS ARE AT THE VOLUME 3 - CHAPTER 26)

☞ IMPORTANT NOTE

The operations described in CHAPTER 15 - 16 - 17 - 18 are for the first START-UP ***LPE'S RESPONSIBILITY*** and HAS NOT TO BE CARRIED OUT BY PERSONNEL APPOINTED BY THE CUSTOMER.

A. Introduction

The machine is delivered to the Customer after an accurate final test at the factory.

Each machine is supplied with the proper check booklet (System Operation Check Procedure).

The System Operation Check Procedure are the functional and quality controls that are carried out by LPE Technical Team, during the machine mechanical/electrical assembly and the factory final test and/or the calibrations that are carried out in LPE factory and are repeated beside the Customer.

Inside of this booklet, are described the simpler procedures, while the more complex procedures, for reasons of space, are described in this chapter of the Instruction Manual; they are the preliminary and start up procedures. Should values, parameters and checks prove incorrect, consult the “Troubleshooting” chapter and relevant test procedures.

⚠ CAUTION

THIS CHAPTER FOR SPECIALIZED PERSONNEL, NOT FOR MACHINE OPERATORS.

NOTE: the following letters show examples of the introduction of check lists. The examples are not exhaustive; the complete and personalize Check List is delivered with the Reactor.
For the Check List compilation, follow the procedures described in the System Operation Check Procedure booklet or in the following chapters.

SYSTEM OPERATION CHECK PROCEDURE

- INTRODUCTION -

EXAMPLE

Customer : ……..

Equipment denomination : **Epitaxial Reactor PE2061S**

so composed :

model	Epireactor	Epiconverter	Workstation
type	PE2061S	IFC 150/2	Ultra10
s/n	….	….	…..
year	…..	….	…..

The present booklet encloses the lists of the tests and calibrations that are carried out by LPE Technical Team, during the machine assembly and start up. The control mechanical groups, the pressure controls, some functional controls with system in standby and in power, are carried out by LPE factory. Some tests and calibrations are carried out by LPE Installation Team beside the Customer.

Yet not mandatory, the presence of apposite Customer representative is highly recommended.

1. Preliminary start up

The preliminary checks are a set of the tests that are carried out at LPE and that are repeated at the Customer. Some tests (marked with the symbol ©) be carried out only at Customer site. The procedures to perform these tests are described in the Instruction Manual, volume 1 - chap.15.

2. Start up

The check procedures are the final tests and calibrations (start-up) that are carried out at the Customer by LPE Engineer. The procedures are described into volume 1 - chap. 17 and chap. 18. In the configuration parameters list (Factory Calibration) are recorded the calibration values, set on the system at start-up completion.

3. Mechanical assembly procedure

The complete mechanical assembly procedures are described in the Instruction Manual, volume 1-chap.8 and chap.13.

LPE recommend the Customer to examine and to preserve the present check lists as system documentation, returning countersigned the copy, as verification of the tests.

We ask besides to note the modifications of the parameters on the appropriate forms of configuration.

Date _____ LPE signature _____

Date _____ Customer signature _____

B. System status for executing preliminary check procedures:

- **Power supply** : Connected to reactor and power generator
- **Cooling water** : Connected to reactor and power generator delivered and pressurized
- **Gas** : Customer's line connected, supplied and checked for leaks
- **Exhaust gas venting (scrubber)** : Must be operating (customer's responsibility)
- **Compressed air** : Connected and set as follows:

Open the compressed air supply using the valve inside the GAS PANEL.

Pull the FRL unit knob outward to release and turn it clockwise to set inlet pressure at **6 bar**.

Next, push the knob to lock the set pressure value.

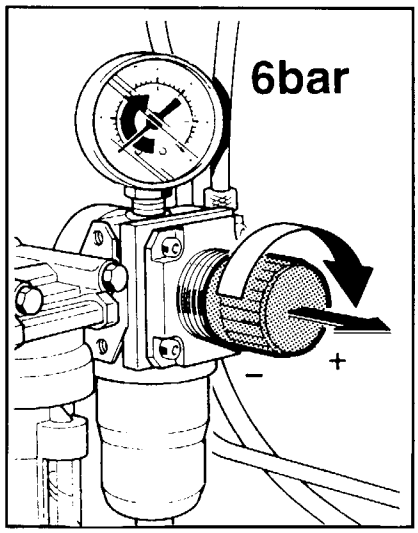

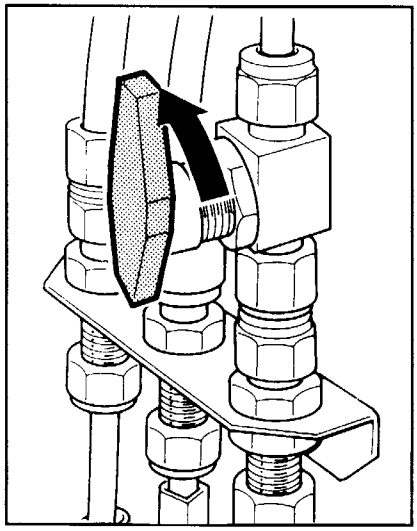

Using the same technique, adjust compressed air FRL units of station **A** and **B** (clamps activation) setting at **1-1.2 bar (n**

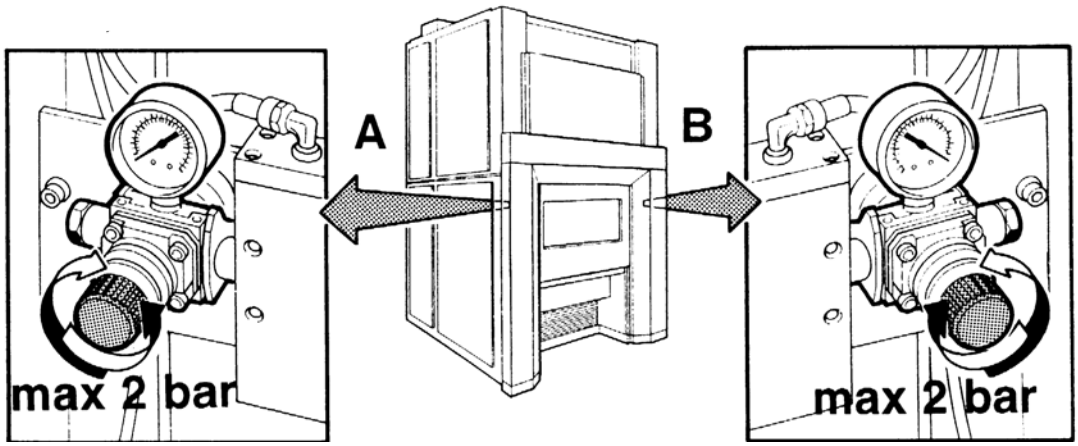

Procedure S1 and S2 (400/230V - or other voltages - measured on connecting main switch A-32)

a. Check the two voltages at line input using a tester.

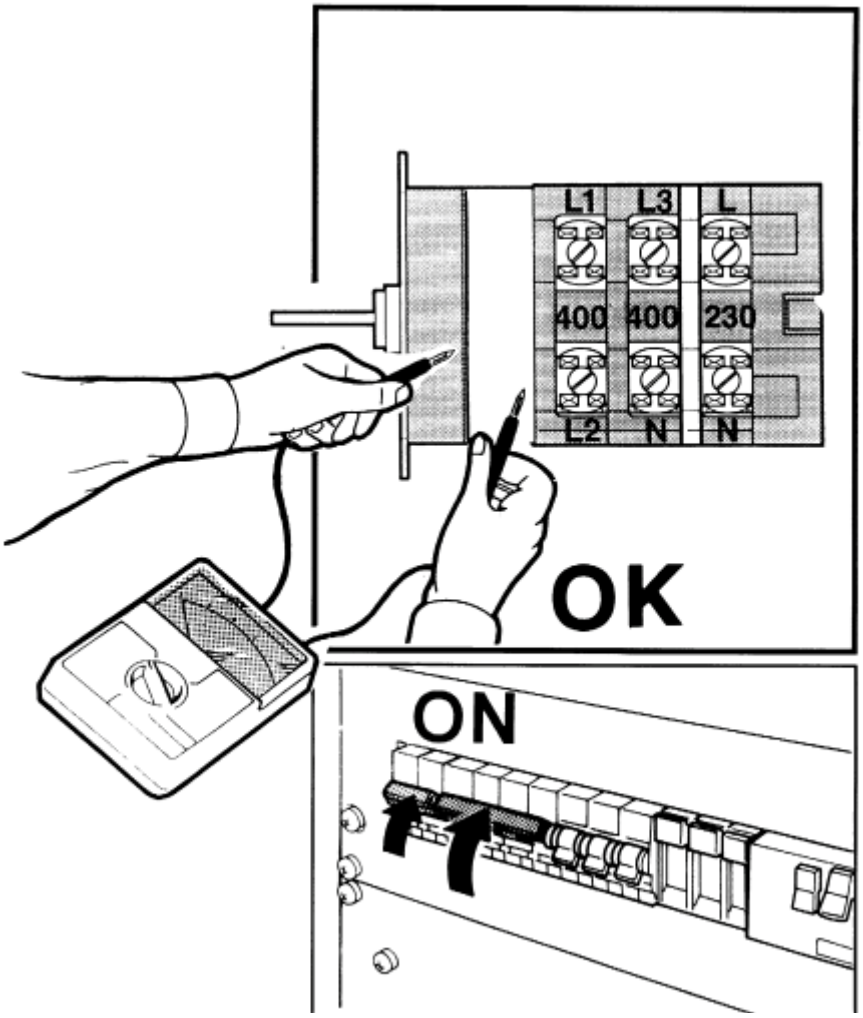

b. Cut in power to the two master switches and turn the key-selector.
CONTROL UNIT ENABLED.

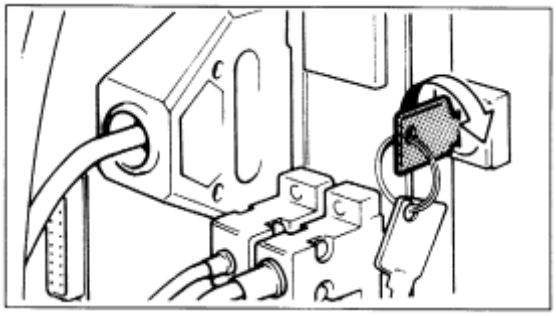

Procedure S3 and S4

24 V P.C. digital input PC boards - 60 V stepping motor drivers

a. Using a tester, check voltage at **24 V DC** between terminals **XA125 (+) and XA123(-).**

Note: This sketch is just as an indication.
Always refer to the reactor "Schematic Wiring Machine" Manual

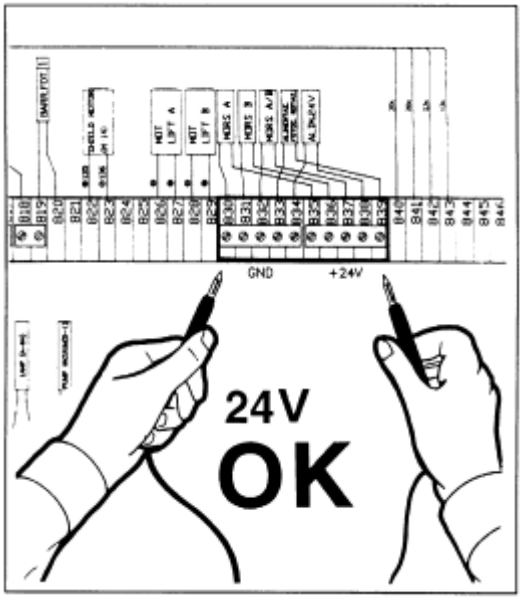

b. Using a tester, check that power output at position **Y14** is set to **60 V DC.**

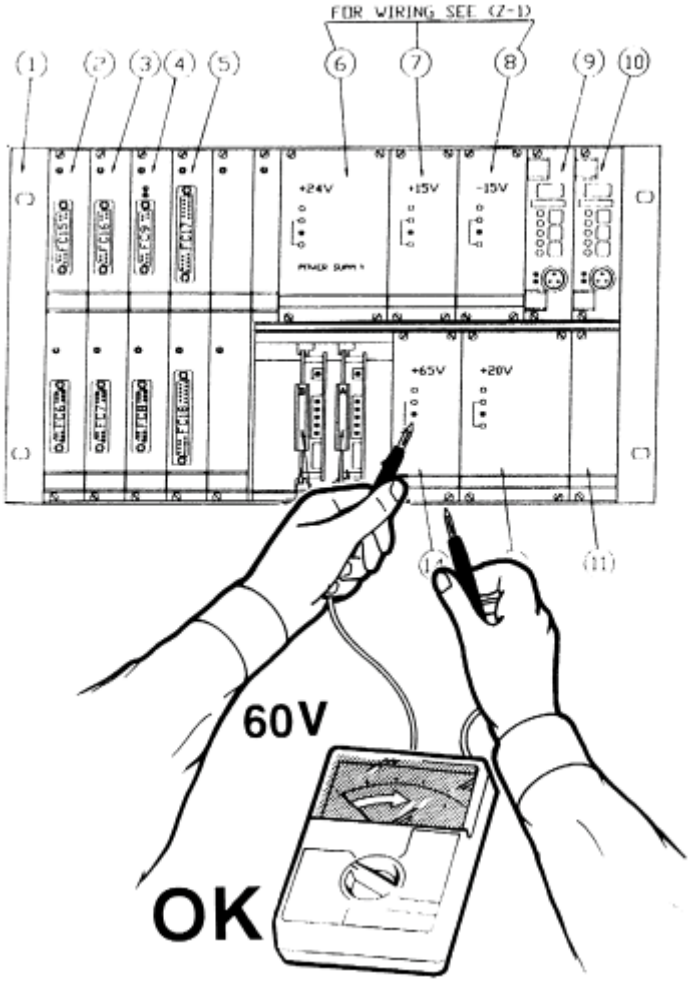

Procedure S5 (+/- 15 MFC measured on MFC connector)

WARNING

Check the MFC and Source version

MFC card edge version:

Check the voltages between the connection pins:

B - 4 = **+15VDC**

B - F = **-15VDC**

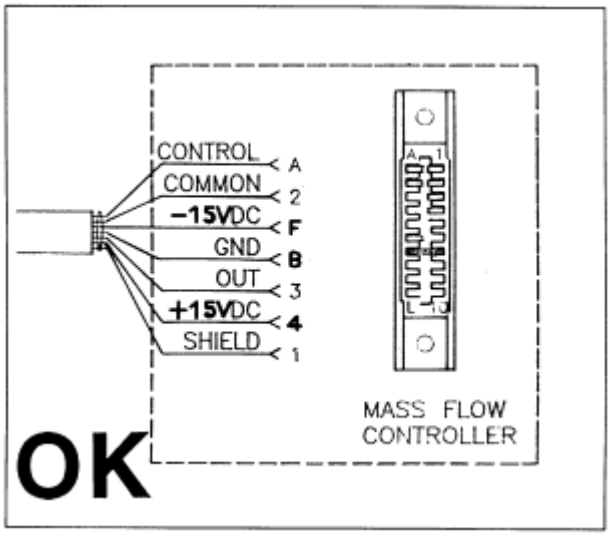

MFC D-connection version:

Check the voltages between the connection pins:

1 - 5 = **+15VDC**

1 - 6 = **-15VDC**

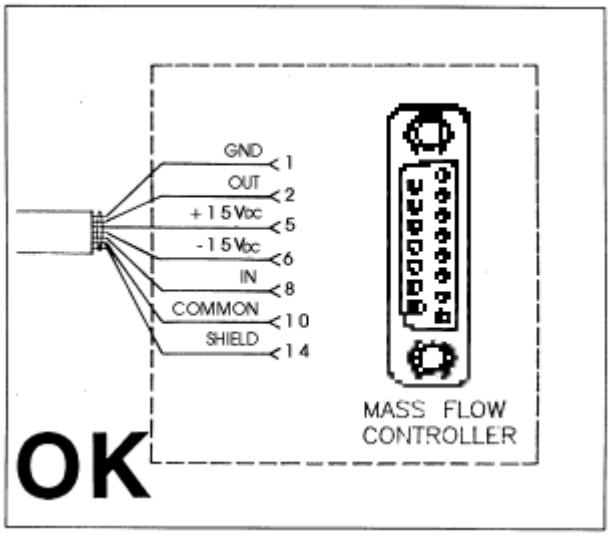

Procedure S6 (220 V Silicon Sources measured on source connector)

>> (only for Source Vaporized version) <<

a. Check that **230 V** is present at positions **A and D** of the terminal board.

b. Pull out the plug and repeat the same operation at Source **2 .**

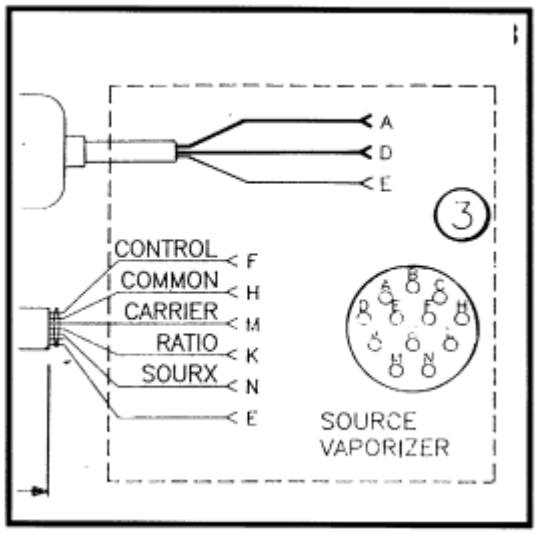

These checks must be carried out by selecting the View Alarms pages of the MAIN MENU.

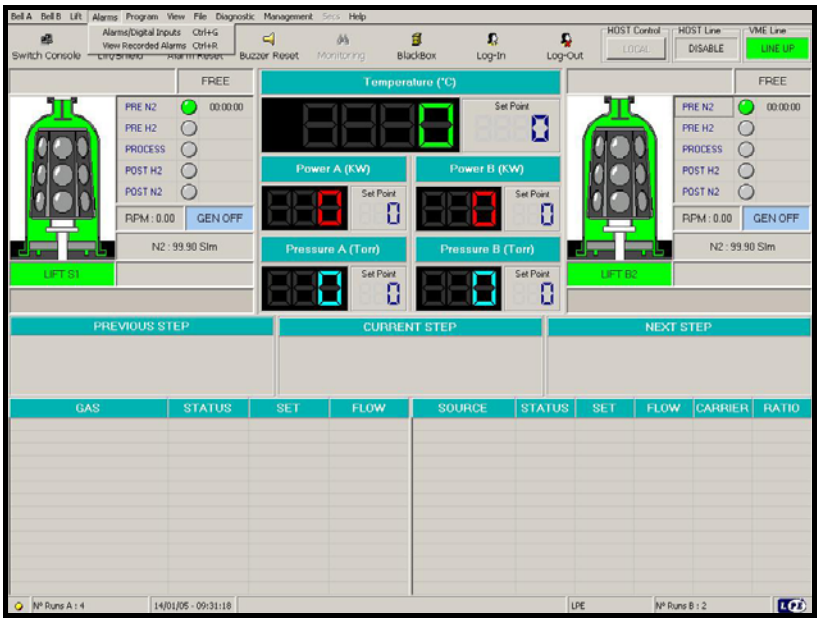

Select the View ALARMS command to display the reactor alarm situation. A colored light is displayed beside each alarm:

GREEN LIGHT	:	relevant alarm not present
RED LIGHT	:	relevant alarm present
YELLOW LIGHT	:	relevant alarm NOT activated on reactor

Alarm Form

Digital Input / Alarms

001	PRESS BELL A WARNING	Warning	033	THERMAL SWITCH COMPUTER AIR	Warning
002	PRESS BELL A ALARM	N2-Alarm	034	O-RING LEAK TEST A	N2-Alarm
003	THERMAL SWITCH PLATE A	H2-Alarm	035	SAFETY SWITCH COMPUTER PORT	Warning
004	FLOW SWITCH PLATE A	H2-Alarm	036	O-RING LEAK TEST B	N2-Alarm
005	THERMAL SWITCH COIL A	H2-Alarm	037	PRESSURE SWITCH SPOILER	No Alarm
006	FLOW SWITCH COIL A	H2-Alarm	038	BUBBLER T.C. OUT OF RANGE	No Alarm
007	THERMAL SWITCH PLATE B	H2-Alarm	039	SCRUBBER EMISSION	No Alarm
008	FLOW SWITCH PLATE B	H2-Alarm	040	H2 LEAK DETECTORS FAULT	No Alarm
009	THERMAL SWITCH COIL B	H2-Alarm	041	PRESS BELL B WARNING	Warning
010	FLOW SWITCH COIL B	H2-Alarm	042	PRESS BELL B ALARM	N2-Alarm
011	THERMAL SWITCH BELL CAPS A/B	H2-Alarm	043	COMPRESSED AIR PRESSURE	N2-Alarm
012	FLOW SWITCH BELL CAPS A/B	H2-Alarm	044	BUBBLERS 1/2/3 ALARM	H2-Alarm
013	THERMAL SWITCH CAPACITORS	H2-Alarm	045	AIR FLOW SENSOR	H2-Alarm
014	FLOW SWITCH CAPACITORS	H2-Alarm	046	SCRUBBER TROUBLE	N2-Alarm
015	THERMAL SWITCH COOLING AIR	H2-Alarm	047	SAFETY SWITCHES PORT A	N2-Alarm
016	LIFT A PORT/QUARTZ GUARD SHIELD	Warning	048	SAFETY SWITCHES PORT B	N2-Alarm
017	EMERGENCY WATER	No Alarm	049	SPOILER IN A	No Alarm
018	SAFETY SW RP PORT	No Alarm	050	SPOILER IN B	No Alarm
019	LIMIT SWITCH LIFT UP A	No Alarm	051	BUBBLER 1 LEVEL	No Alarm
020	LIMIT SWITCH LIFT DOWN A	No Alarm	052	BUBBLER 2 LEVEL	No Alarm
021	LIMIT SWITCH CLAMP A CLOSED INT	No Alarm	053	FRONT SHIELD CLOSED	Warning
022	LIMIT SWITCH CLAMP A CLOSED EXT	No Alarm	054	N2 VACUUM PUMP	No Alarm
023	CLAMP A OPEN	No Alarm	055	LIFT B PORT/QUARTZ GUARD SHIELD	Warning
024	ROTATION FOOT SWITCH A	No Alarm	056	BUBBLER 3 LEVEL	No Alarm
025	REACTOR H2 LEAK WARNING	Warning	057	VACUUM PUMP TROUBLE	No Alarm
026	REACTOR H2 LEAK ALARM	N2-Alarm	058	COMPRESSED AIR VACUUM VALVES	No Alarm
027	GAS PANEL H2 LEAK WARNING	Warning	059	LIMIT SWITCH LIFT UP B	No Alarm
028	GAS PANEL H2 LEAK ALARM	N2-Alarm	060	LIMIT SWITCH LIFT DOWN B	No Alarm
029	BLOWER MOTOR THERMAL SWITCH	H2-Alarm	061	LIMIT SWITCH CLAMP B CLOSED INT	No Alarm
030	LAMINAR FLOW PRESSURE SWITCH	Warning	062	LIMIT SWITCH CLOSED EXT	No Alarm
031	POWER FAIL	No Alarm	063	CLAMP B OPEN	No Alarm
032	EXHAUST AIR VACUUM SWITCH	H2-Alarm	064	ROTATION FOOT SWITCH B	No Alarm

Exit

Procedure C1 (Pressure switch A-B WARNING/ALARM)

This procedure is identical both for **WARNING** and **ALARM** referring both to station **A and B.**

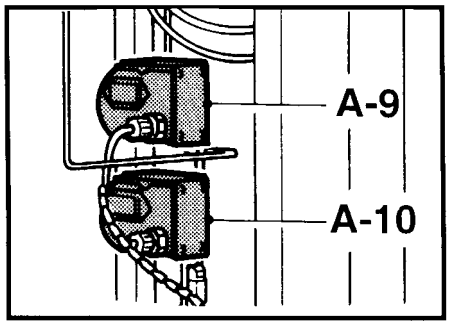

Station A WARNING

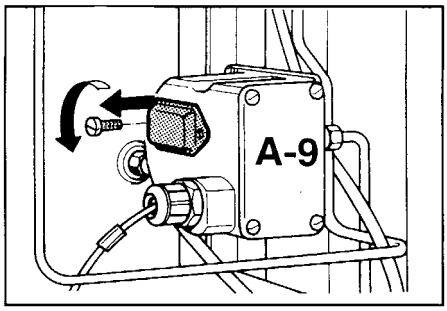

a. Remove the pressure switch **(A9)** cover;

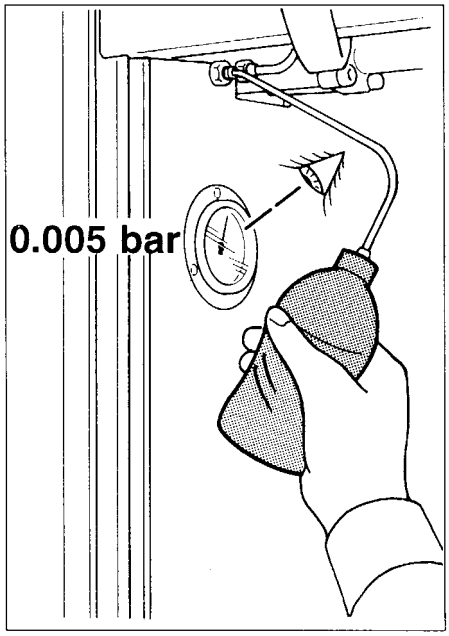

b. Using the pump set the pressure switch input to pressure of **0.005 bar for WARNING .**

c. Turn the screw until the **WARNING** LED begun red.

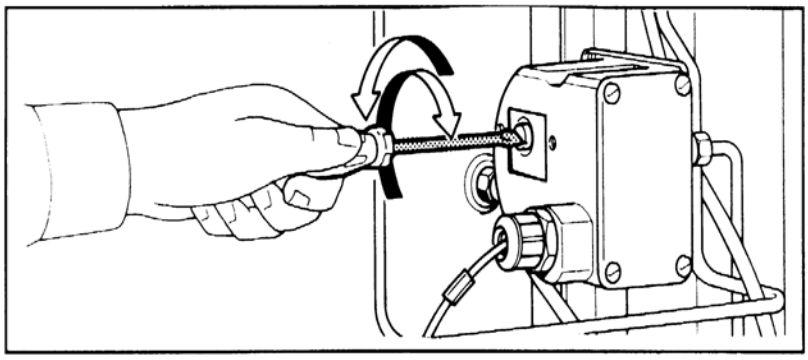

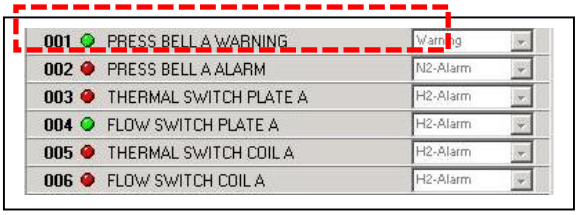

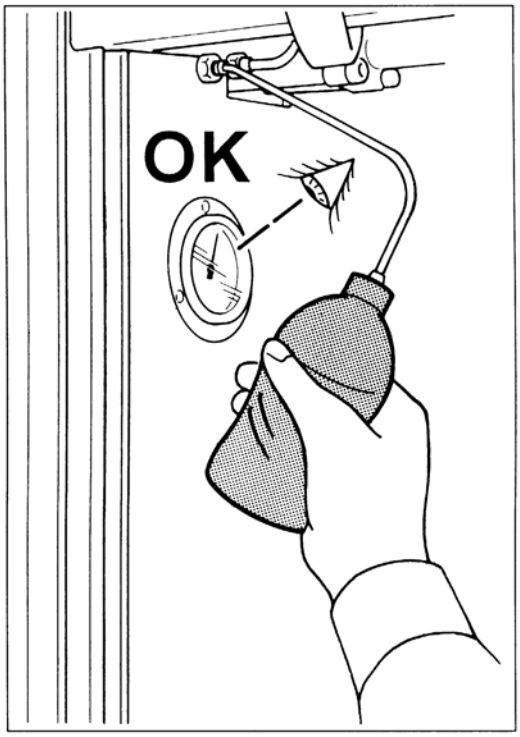

d. Using the pump, but not turning the screw, re-check that the **LEDs** are switching at correct pressure.

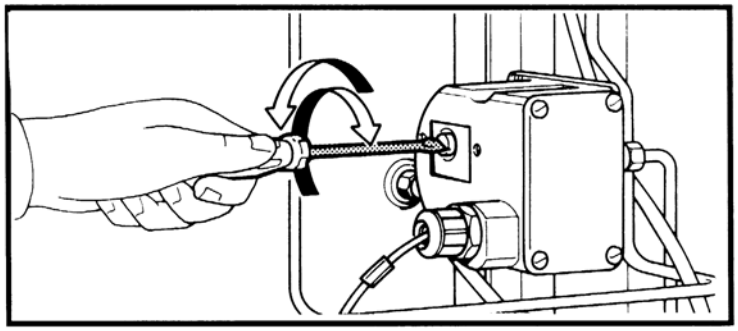

e. If they do not turn red, turn contact screw to adjust once again the triggering pressure.

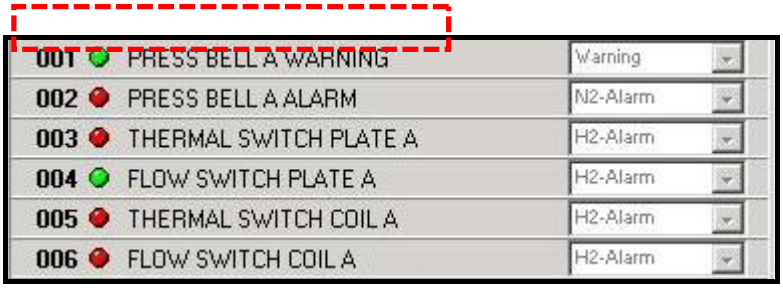

Station A ALARM

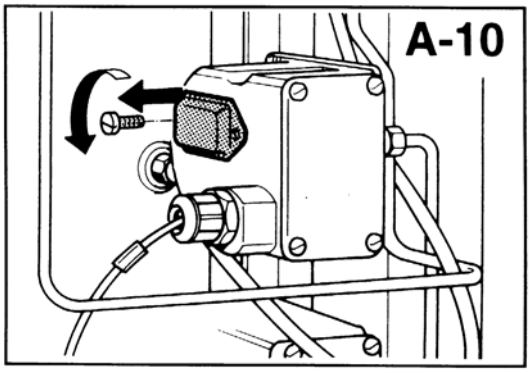

a1. Remove the pressure switch **(A10)** cover;

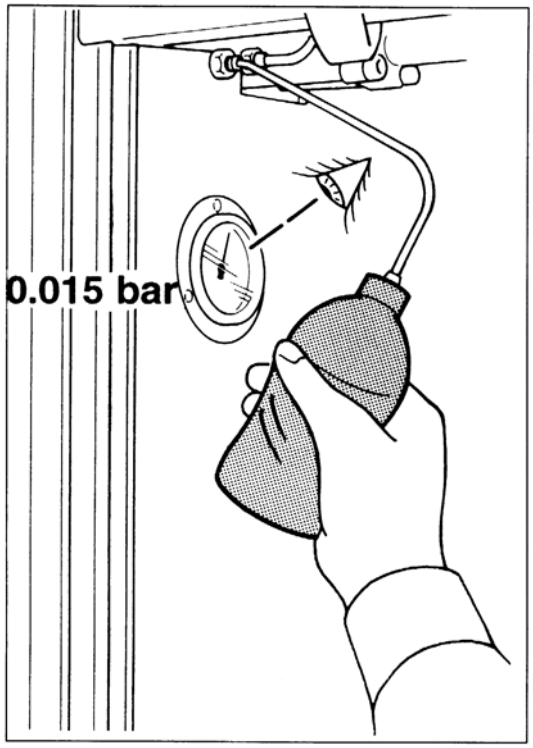

b1. Using e pump set the pressure switch input to pressure of **0.015 bar for ALARM**

c1. Turn the screw until the **ALARM LED** begun red.

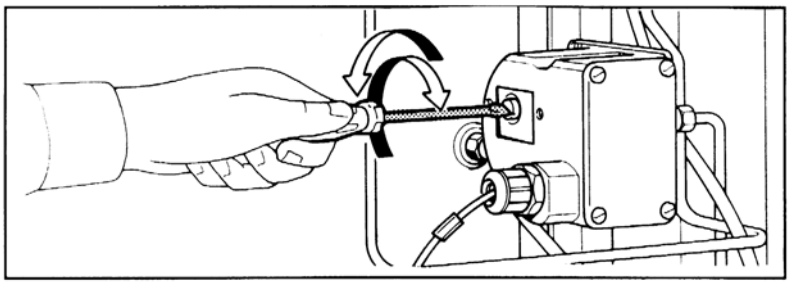

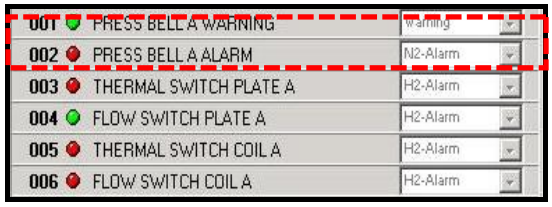

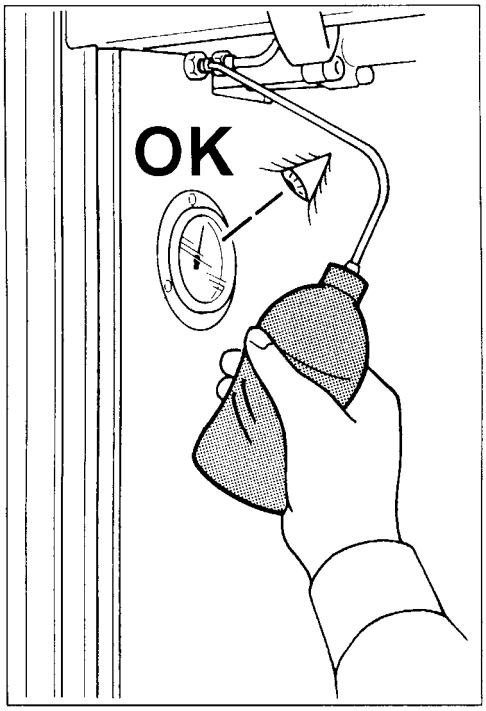

d1. Using the pump, but not turning the screw, re-check that the **LEDs** are switching at correct pressure.

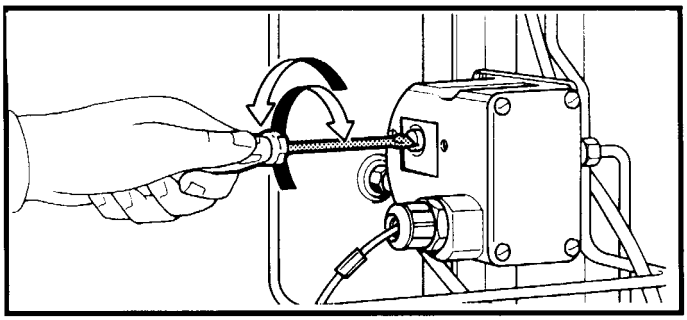

e1. If they do not turn red, turn the contact screw adjust once again the triggering pressure.

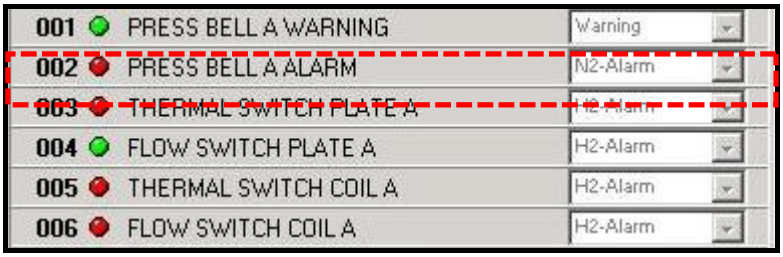

Repeat the same procedures on station **B** pressure switches **(A67) and (A68).**

Procedure C2 (Limit switches)

Make sure that the 6 sensors both on station **A and B** are correctly fitted according to the distances indicated on the mechanical drawings.

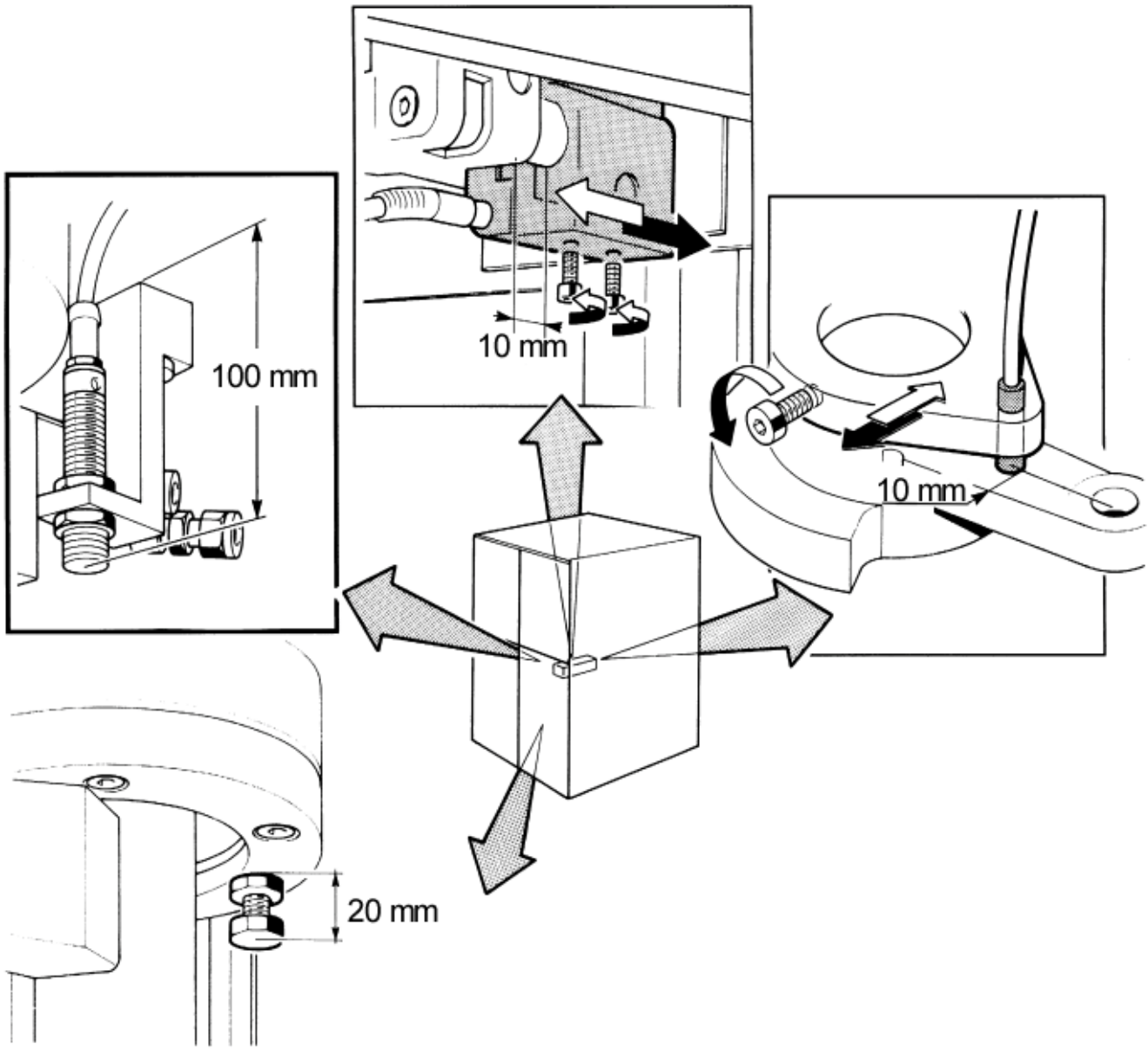

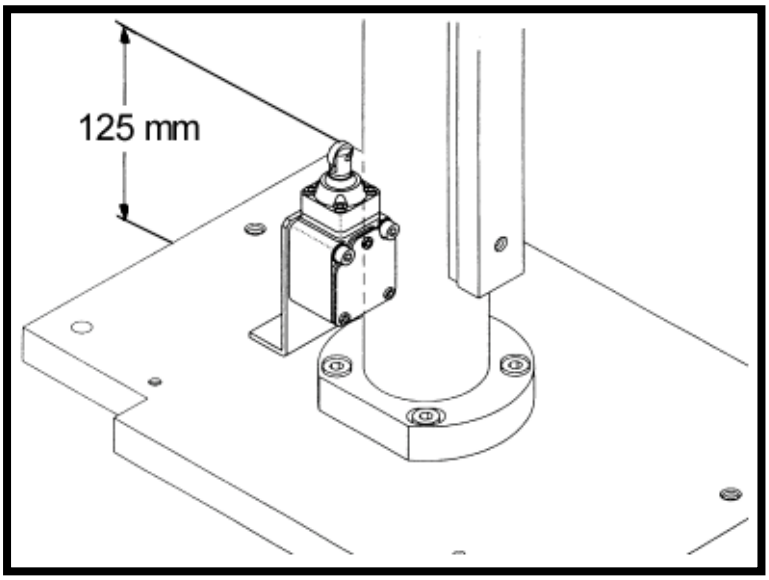

Procedure C3 (Zero and full scale setting of H2 LEAK DETECTOR WARNING/ALARM 1/2)

There are three different kinds of Hydrogen Sensor used in LPE PE2061S reactors. All the models are equivalent but differs in the regulation details. Please refer to the corresponding **MP0/LIE** or **MP1** Manual provided with the machine for more information.

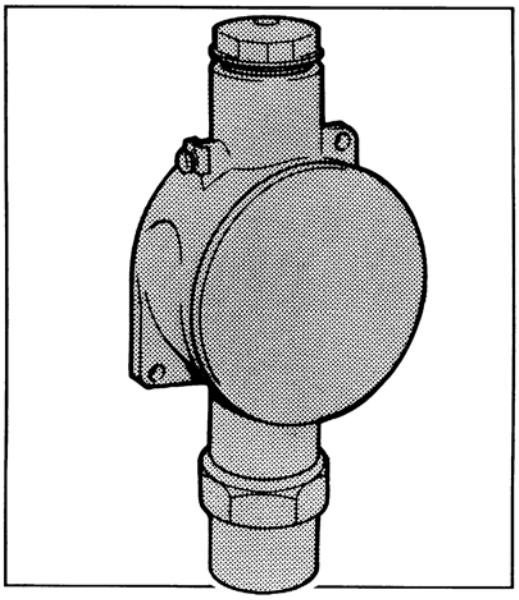

The instrument must indicate ZERO in the presence of clean air, and 100 or other value in regard to full scale.

Two methods are possible both for zero and full scale settings:

a. approximate trimmers (analog circuit)

b. push-buttons (digital circuit)

The trimmer adjusts from a starting to a finishing point depending on the number of revs. (20) permitted by the trimmer design. Push-button adjustment is controlled by the card's software. Control start and finishing positions are defined, within the card's work ambient, by the numbers illustrated here and visible on the card by following the relevant instructions. For zero setting, the adjustment range is -10 to +10.

Adjustment range for LEL version:

starting point -5 (the cards are delivered with this OFFSET value); minimum value -10; maximum value +5. In addition to these values, zero must be set with the zero trimmer.

FULL SCALE SETTING (minimum value 10; maximum value 200).

The instruments are normally supplied with the SPAN value set at approx. 110. When this value reaches 200, maximum threshold has been reached and the push-button is of no further use. If you wish to further increase the value shown on the display, use the SPAN trimmer.

SETTING VALUES

WARNING = 10% L.E.L. (LOWER EXPLOSIVE LEVEL)

ALARM = 20% L.E.L. (LOWER EXPLOSIVE LEVEL)

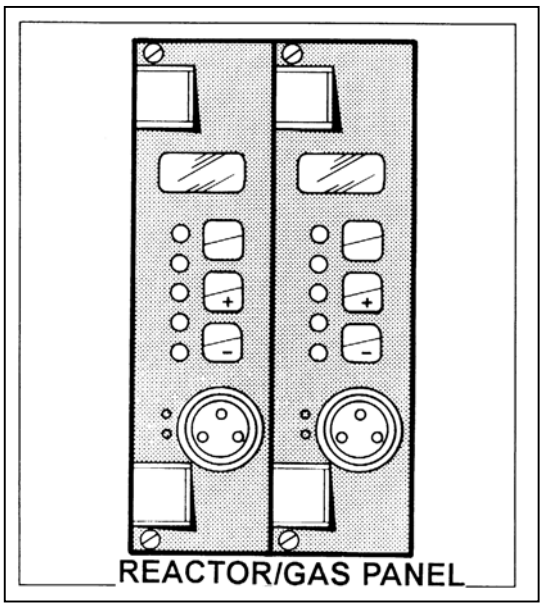

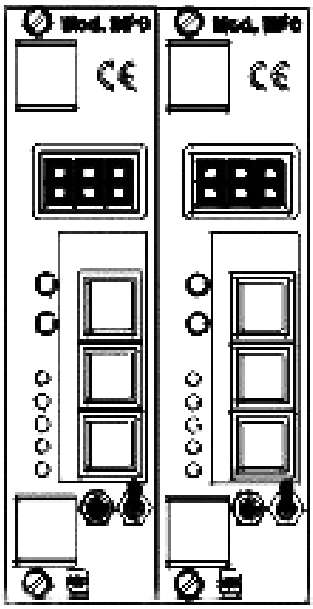

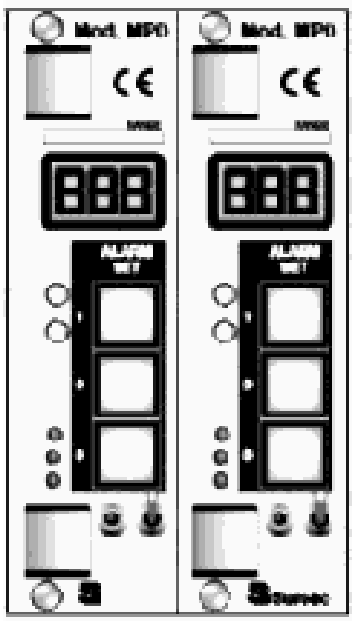

COMMISSIONING

a. Make sure that the sampling-head-to-sensor connection is efficient - the wires must be fitted carefully and firmly on the terminal board, without touching each other.

b. Make sure that the ***MP0/LIE*** or ***MPI*** card is powered at correct voltage.

c. Power up the card - the display will show the following data :

- microprocessor control. Display shows “0”
- display and led test. Display shows “888” and all the led are sequentially switch on
- internal circuits control. Display shows sequentially “1”, “2”, “3”, “U17” and “4”
- if electronics errors are not found, the display will shows “---“ for about 50 sec. (SENSOR WARM UP)

d. Assuming that the card is operating efficiently, and no trouble messages are shown on the display - with the exception of ***“OVER/RANGE*** reached” indications - you may set zero and full scale on the instrument.

Before describing the setting procedure, we give you fuller details below of action to be taken in case the display shows:

“U-E”/”F-G” this means the display has reached the sub-zero alarm value, referred to as ***“UNDERFLOW***” on the test certificate.

To exit this condition, turn the zero approximate trimmer CLOCKWISE until a numeric value is shown on the display.

O-E”/”A-3” the display has reached the ***OVER RANGE*** value, which is usually approx. 115% of LIE, after which sensor voltage is gradually reduced to prevent sensor failure. The MP1 card is one of the few on the market which has this important accessory which protects the sensor against catalytic combustion when the gas quantity contact exceeds 115% of LIE. To exit the ***“O-E/”F-G”*** condition, turn the zero trimmer ***CLOCKWISE*** until a numeric value is shown on the display. The “O-E” message, in any event, is stored. To reset ***“O-E”,*** return to RESET status.

To sum up, the instruments may indicate values other than zero. or ***“O-E”/”U-E”.*** This is due to the line, or to be more precise, to the 3-pole shielded cable connecting the control unit to the sensor - the greater the line length, the greater the load toward the control unit.

During setting procedures in our laboratory, for series ***MP1/CP/LIE*** instruments, a 100 m line is simulated with a 1.5 mm2 gauge cable providing overall resistance of 3 ohm. For the ***MP1/LIE*** series instruments with rack, a 200 m line is simulated with a 1.5 mm2 gauge cable providing overall resistance of 6 ohm. 165. At this juncture, we advise you to slightly

e. CHECKING CORRECT VOLTAGE OF POWER SUPPLY TO THE SENSOR

Check if voltage fed to the sensor matches is value in the range 1.85 to 2.15V. If it is on this range do not adjust anything, therefore use push-button + and - in S-C status to increase or reduce voltage value.

f. ZERO SETTING (FIRST ZERO SETTING AT START-UP)

The sensor is supplied in a plastic bag protecting it from the external environment. So, before removing this, carry out initial ZERO SETTING using the ZERO TRIMMER.

Digital setting is only to be used successively for the other zero settings.

Access the selection facility using function S-O.

In the MP1/LIE instrument, push-button settings can be effected bearing in mind that settings may vary by +5 to -10 with respect to OFFSET value.

For example, the display reading is 3, it must therefore be reduced by -3 to take the reading to zero. The value may be 2 after one month - to take it to zero, the reading must be reduced by -2. Thus -3 the first time and -2 the second gives a total of -5. You may execute these adjustments in the range -10 to +5. To display this OFFSET value, access condition S-O and press push-button STB/+ and RST/- simultaneously.

The push-button no longer has any effect outside the -10 to +10 range, and the trimmer must therefore be used under these circumstances.

THE INSTRUMENT IS SUPPLIED WITH AN OFFSET VALUE OF = -5

(stop at +5 even if it is possible to adjust up to +10).

g. FULL SCALE SETTING

Two setting methods are used:

1. A setting cylinder containing a solution, usually CH4 or H2, titrated in air in a range of LIE 30-50%. Pressure reducer. Sensor adapter. A 1 lt/min deflectometer is recommended, although not essential.
2. A 1 lt can with perforated top and seal, a 50 cc syringe, CH4 at 100%.

While the cylinder contains the titrated mixture, the can is used to create a mixture which depends on the quantity of CH4 syringed into it. E.G.: if 25 cc of CH4 is syringed into the can, this produces a mixture of 50% LIE of CH4.

Two adjustment methods are used, depending on the model provided:

1. SPAN approximate trimmer.
2. Digital adjustment by push-buttons, by accessing the S-S functions programming facility. UNDER THIS CONDITION, THE ALARM RELAYS ARE DISABLED.

   Press push-buttons STB/+ and RST/- simultaneously to read the digital amplification value still available - maximum value = 200.

GAS DELIVERY TO SENSOR

If using a cylinder, a capacity of approx. 0.3 lt/min is recommended.

At this capacity, we assessed that the sensor responded as in the diffusion method, explosive gas being equal. As the sensor operates by diffusion, creating the same operating conditions for setting purposes is essential to obtain accurate readings.

The value to be indicated by the instrument according to the gas mixture used, is mentioned in the test certificate.

For example, if the instrument is set to full scale in order to read 100% LIE of CH4, if a 2% CH4 mixture in the air is used, the instrument should indicate 40.

This also applies, if the sensor was placed inside the 1 liter can and 20 cc of CH4 was syringed into it. The value of 40 is reached by using the SPAN approximate trimmer, or digital amplification adjustment (access S-S for functions programming). We advise you to use the digital amplification method, if possible.

The digital amplification value to which the sensor was preset should be indicated on the test certificate instead of the value recorded during the setting procedure in our laboratory.

At initial commissioning, we advise you to repeat the setting control at least twice. Remember to check efficiency of the alarms and relevant relays.

Check if the relevant alarms are shown on the monitor.

SETTING FREQUENCY

We recommend you to carry out periodic setting checks.

The procedure has already been fully described. It is up to the user to decided checking frequency. Electronics can be checked by using the zero trimmer and obtaining values on the digital indicator sufficient to trigger the alarm circuits. However, sensor reliability can only be checked by using gas.

we advise you to carry out a periodic check, at first every quarter, extending this to 6 months if good full scale stability (-10% of full scale value in 6 months) is obtained through the checks.

If you meet with any problems at the setting stage, to solve these, contact our specialized personnel.

SENSOR REPLACEMENT

The only repair procedure that we think ought to be described is replacement of the sensor or detecting element.

-Replacement is necessary when a lack of continuity is noted in a pellistor following control with an ohm-meter.

Pellistor resistance is only a few ohms (approx. 2W), Sensor failure is signaled as a fault.

It is also necessary in case of low sensitivity, i.e. full scale is no longer obtained when using setting gas.

Procedure:

-Put the MP1 card on stand-by. Remove the sensor and fit a new one. Remember to install a VQ model identical to the one previously installed. To trace the correct model, consult the test certificate, or read “model VQ” identification on the sensor body.

-Power up the instrument and execute the commissioning procedure again.

NOTE: for particular information about **MP0/LIE** and **MP1** installation and setting, see the enclosure **MP0/LIE** or **MP1** manual

Procedure C4 (Laminar flow pressure switch)

a. Remove the cover and use the scale-reference screw set to **1 mbar.**

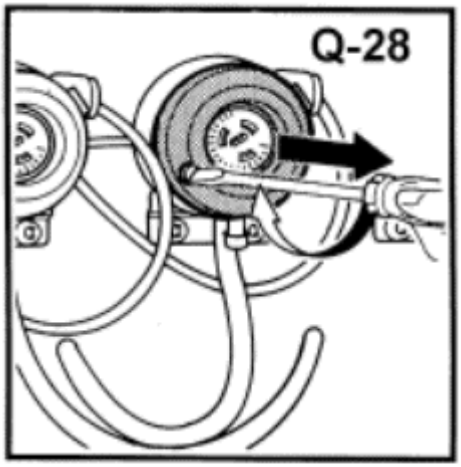

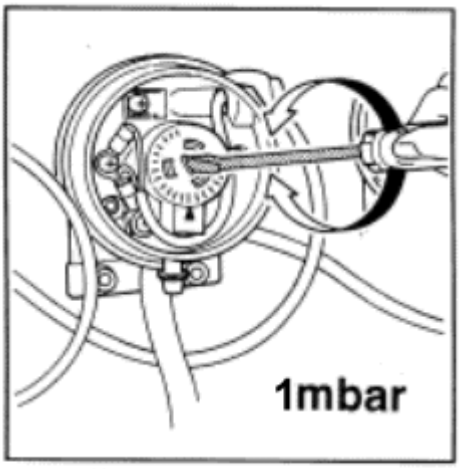

b. Switch on LAMINAR FLOW.

c. Turn the speed control knob **(A25)** halfway.3

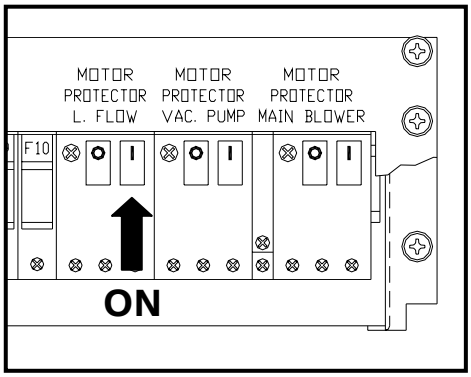

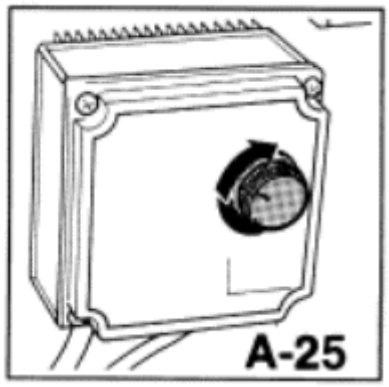

d. Make sure that the **LEDs** corresponding to the **ALARM** page become **GREEN.**

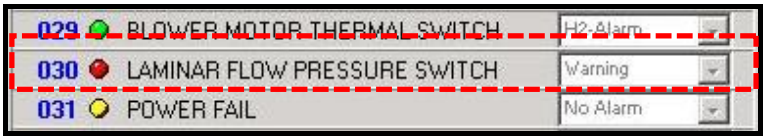

e. If the led is not switching to **GREEN**, increase speed with the speed control knob **(A25).**

Procedure C5 (Exhaust air vacuum switch) ©

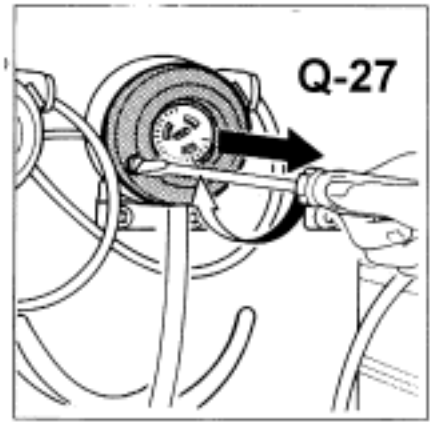

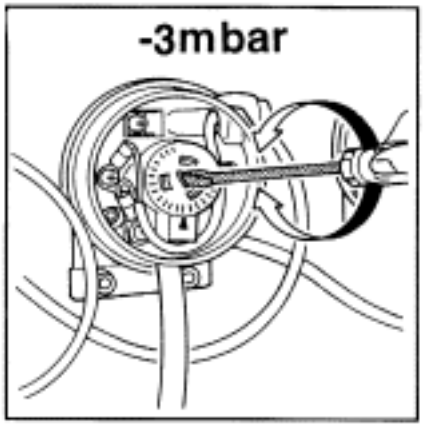

a. Remove the cover and use the scale-reference screw to set to **-3 mbar.**

b. Suck tube with your mounth and check if the **LED** become **GREEN.**

c. Final test to be carried out by the customer when machine is connected.

Procedure C5 (Spoiler pressure switch) ©

a. Remove the cover and use the scale-reference screw set to **6 mbar .**

b. Suck tube with your mounth and check if the **LED** become **GREEN.**

c Final test to be carried out by the customer when machine is connected.

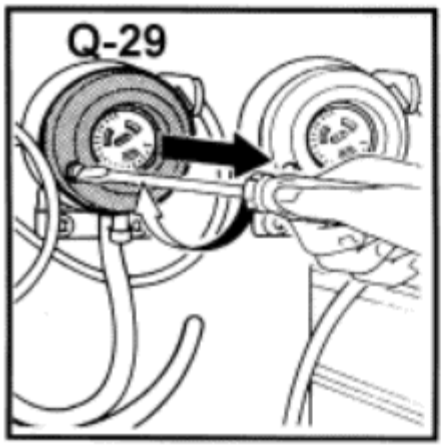

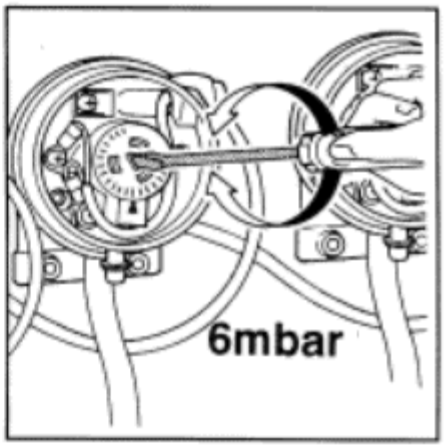

Procedure C5 (Cooling air pressure switch) ©

a. Remove the cover and use the scale-reference screw to set to **2-3 mbar.**

b. Suck tube with your mounth and check if the **LED** become **GREEN.**

c. Final test to be carried out by the customer when machine is connected.

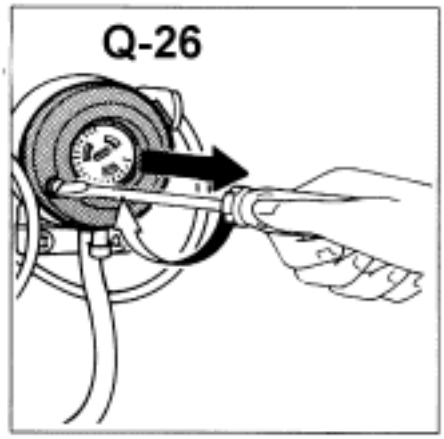

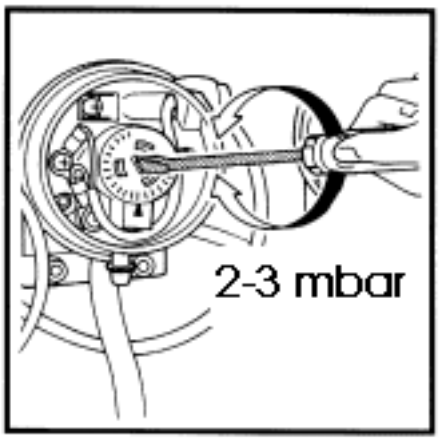

Procedure C6 (Computer cooling air thermal switch)

a. While turning the knob on the instrument (until the **RED MARK** goes below the **BLACK MARK**), check if the **RED** indicator light, referring to the **ALARMS** page, illuminates .

b. Turning the knob, align it up with the **RED MARK** to **30 °C.**

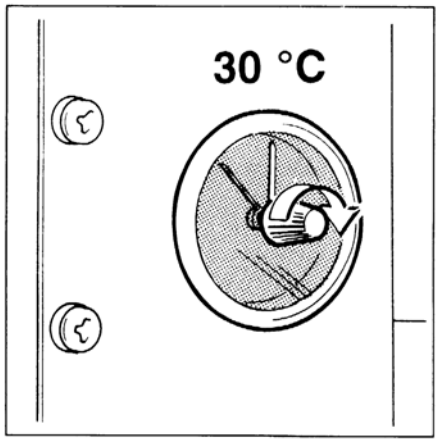

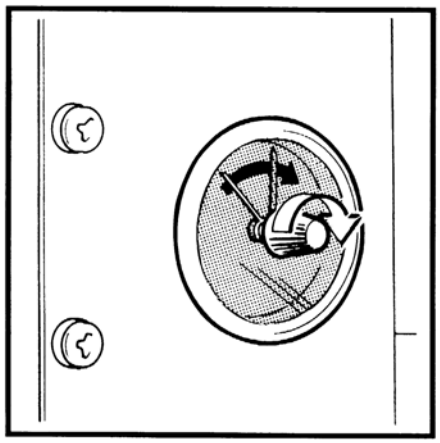

Procedure C6 (Thermal switch air)

a. While turning the knob on the instrument (until the **RED MARK** goes below the **BLACK MARK**), check if the **RED** indicator light, referring to the **ALARMS** page, illuminates .

b. Turning the knob, align it up with the **RED MARK** to **35÷40 °C.**

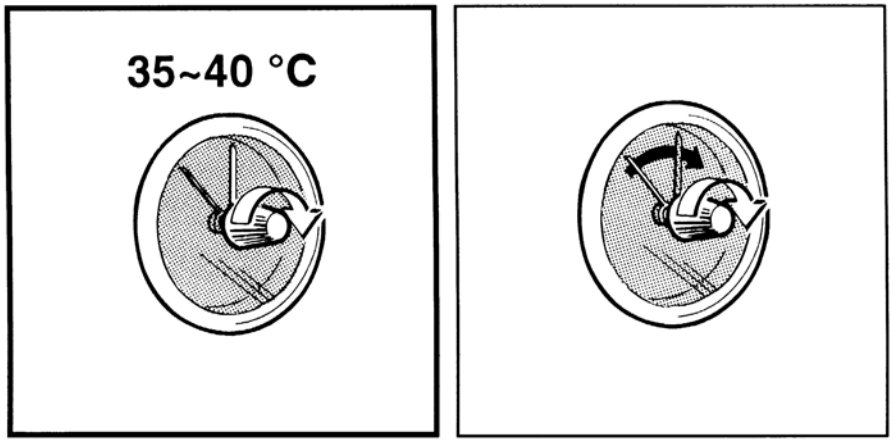

Procedure C7 (Shutter plates vacuum switch A and B)

a. Close the manual valves mV1, mv2, mv3 and mv4 in the o-ring leak group.

b. Verify that the o-ring leak vacuum pump motor protector, placed in the reactor power rack is switched ON.

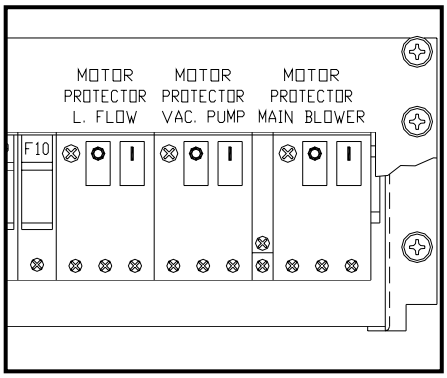

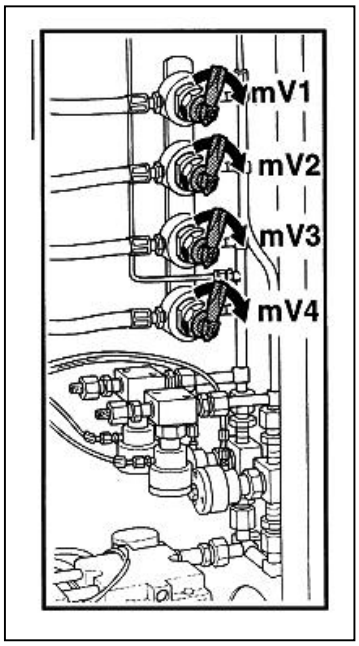

c. Start the test from the Reactor GUI:
Diagnostic→O-Ring Leak Test command window.
The first minute the pump is ON. After that it will be automatically switched OFF.

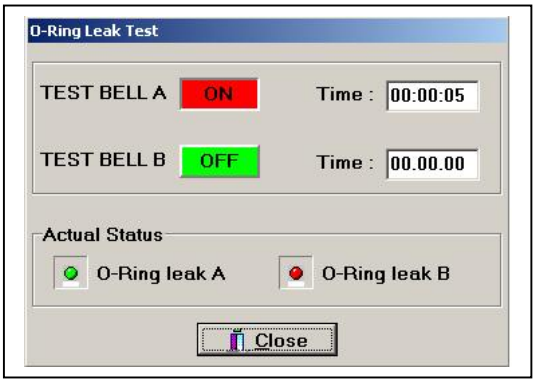

d. Check the pressure gauge **(B)** to ensure that pressure reaches **-0.8 bar** (this confirms vacuum system efficiency).

e. Set the vacuum value at **-0.6 bar** acting ON **mV3 mV4 valves.**

f. Remove the pressure switch cover **VSB.**

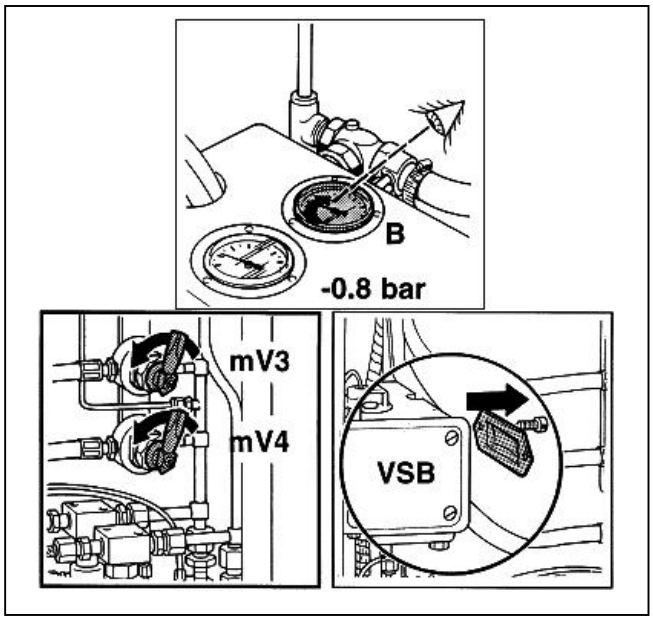

g. Using the screw, set at **-0.6 bar** and make sure the contact switches.
The **LED** lights on the O-ring Leak Test Command Window should turn from green to red color.

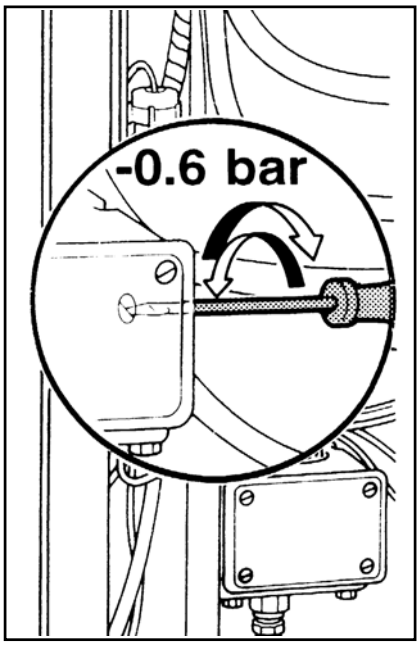

h. By the O-ring Leak test command window terminate the test ,by breaking the vacuum into the o-ring leak test group. Verify that the manometer is back to 0 Bar.

i. Close **mV3 / mV4** valves and verify once again the triggering pressure, by repeating the above procedure.

i. Repeat the same procedure for station **A**, using valves **VT1 and VT3**, as well as **VSA,** discharging excess vacuum through **mV3 and mV4.**

Procedure C8 (Pressure sw compressed air)

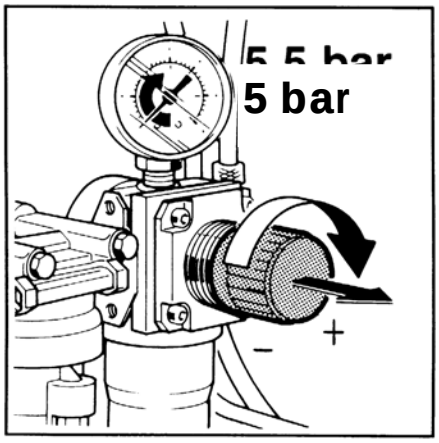

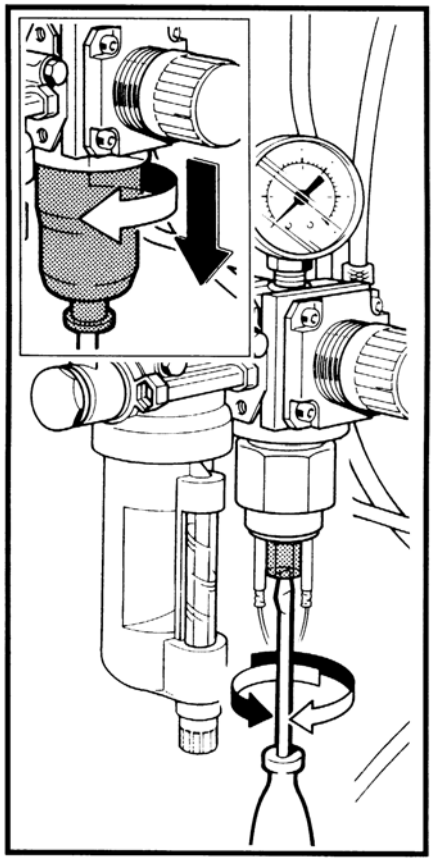

a. Open the compressed air on/off valve.

b. Turn the knob and set pressure at **5 bar.**

c. Remove the rubber and turn the pressure switch screw so that the alarm (**RED LED)** is triggered on the **ALARMS page**.

d. Reset pressure value to **6 bar** and make sure that the **LED** switches to **GREEN.**

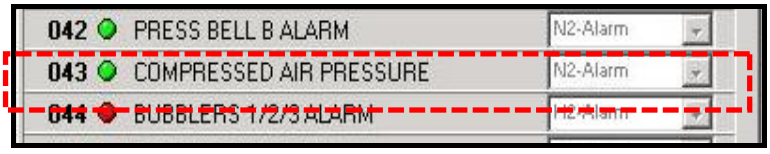

Procedure T1 (Thermal SW shutter plate and bell jar cap A/B - induction coil A/B - capacitors)

a. Disconnect one of the two wires on each sensor and make sure that the corresponding **LED** on the monitor becomes **RED** (open contact).

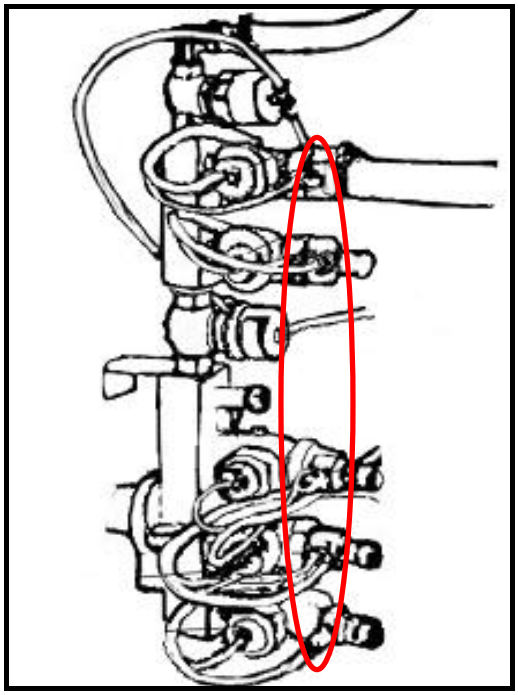

Note: the THERMAL SW BELL CAP A/B led is not active, since the function has been divided and integrated with the THERMAL SW PLATE A and B

001	●	PRESS BELL A WARNING	Warning
002	●	PRESS BELL A ALARM	N2-Alarm
003	●	THERMAL SWITCH PLATE A	H2-Alarm
004	●	FLOW SWITCH PLATE A	H2-Alarm
005	●	THERMAL SWITCH COIL A	H2-Alarm
006	●	FLOW SWITCH COIL A	H2-Alarm
007	●	THERMAL SWITCH PLATE B	H2-Alarm
008	●	FLOW SWITCH PLATE B	H2-Alarm
009	●	THERMAL SWITCH COIL B	H2-Alarm
010	●	FLOW SWITCH COIL B	H2-Alarm
011	●	THERMAL SWITCH BELL CAPS A/B	H2-Alarm
012	●	FLOW SWITCH BELL CAPS A/B	H2-Alarm
013	●	THERMAL SWITCH CAPACITORS	H2-Alarm
014	●	FLOW SWITCH CAPACITORS	H2-Alarm

Procedure T2 (Flow switch shutter plate and bells jar cap A/B - coil A/B - capacitors)

a. Connect the reactor to the cooling water system and open the main inlet and outlet valves, if any (input pressure **3.5 bar min.)**

b. Ensure that valves (**2-3-4-6-8-9**) are fully open

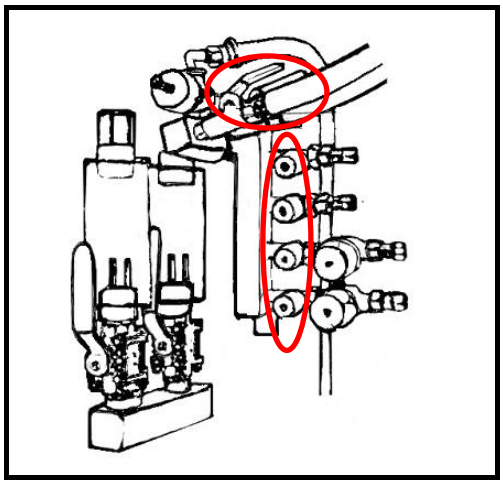

c. Make sure that all relevant **LEDs** become **GREEN.**

d. If any **LED** do no switch correctly, check connections and see if the flow switch is dirty.

Note: the FLOW SW BELL CAP A/B led is not active, since the function has been divided and integrated with the FLOW SW PLATE A and B

001	🟢	PRESS BELL A WARNING	Warning
002	🔴	PRESS BELL A ALARM	N2-Alarm
003	🔴	THERMAL SWITCH PLATE A	H2-Alarm
004	🟢	FLOW SWITCH PLATE A	H2-Alarm
005	🔴	THERMAL SWITCH COIL A	H2-Alarm
006	🔴	FLOW SWITCH COIL A	H2-Alarm
007	🟢	THERMAL SWITCH PLATE B	H2-Alarm
008	🔴	FLOW SWITCH PLATE B	H2-Alarm
009	🟢	THERMAL SWITCH COIL B	H2-Alarm
010	🟢	FLOW SWITCH COIL B	H2-Alarm
011	🟢	THERMAL SWITCH BELL CAPS A/B	H2-Alarm
012	🔴	FLOW SWITCH BELL CAPS A/B	H2-Alarm
013	🟢	THERMAL SWITCH CAPACITORS	H2-Alarm
014	🔴	FLOW SWITCH CAPACITORS	H2-Alarm

Procedure T3 (Limit switches A and B)

a. When lift potentiometers are set (for the correct setting procedure, consult unit **E-57** of the MAINTENANCE chapter), select the lift command window from the **MANAGEMENT** menu.

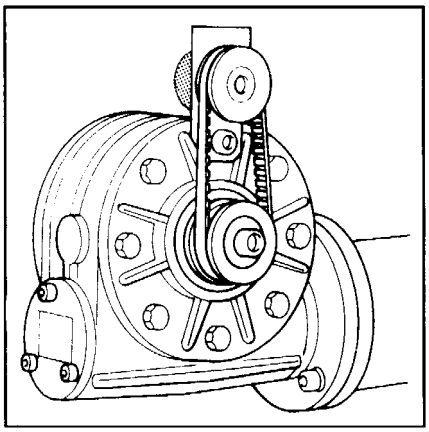

NOTE:

Being this command window only for maintenance purpose, the action of the Safety Switch Lift Ports and of The quartz guard saver photocell are bypassed.

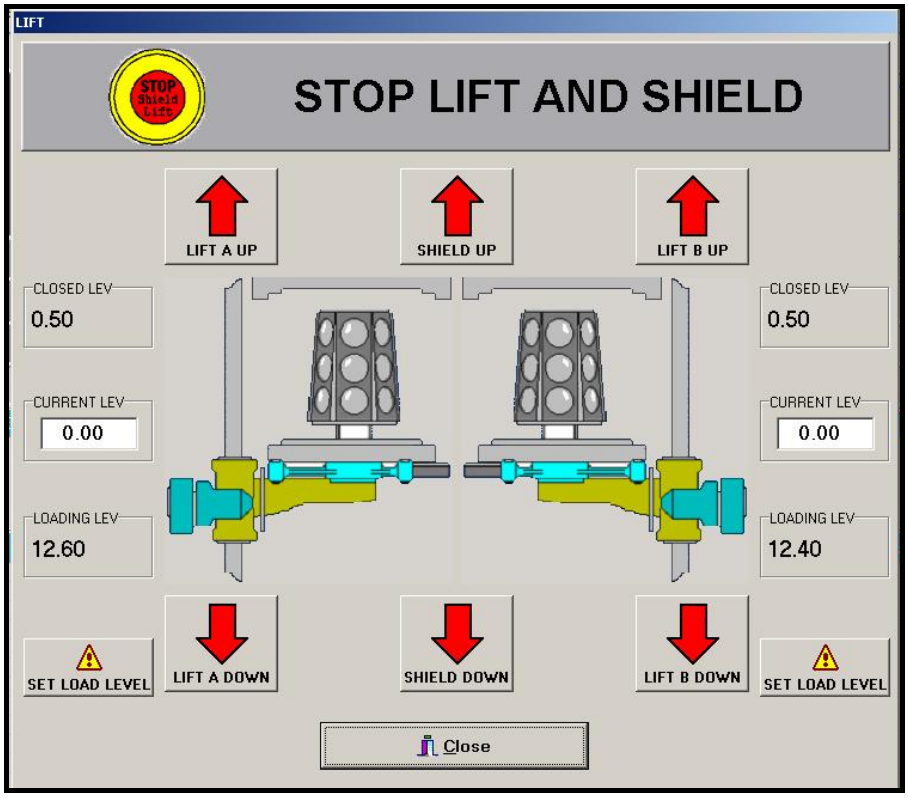

b. Move the elevator to its upper and lower travel limit position, and make sure that on the **ALARMS/DIGITAL INPUT** page, the **LEDs** are according to the configuration shown in the table below.

"A" STATION			
	LEDs	Shutter-plate closed	Shutter-plate open
LIFT UP	18	RED	GREEN
LIFT DOWN	19	GREEN	RED
CLAMP INT CLOSED	20	RED	GREEN
CLAMP EST CLOSED	21	RED	GREEN
CLAMPS OPEN	22	RED	GREEN

"B" STATION			
	LEDs	Shutter-plate closed	Shutter-plate open
LIFT UP	58	RED	GREEN
LIFT DOWN	59	GREEN	RED
CLAMP INT CLOSED	60	RED	GREEN
CLAMP EST CLOSED	61	RED	GREEN
CLAMPS OPEN	62	RED	GREEN

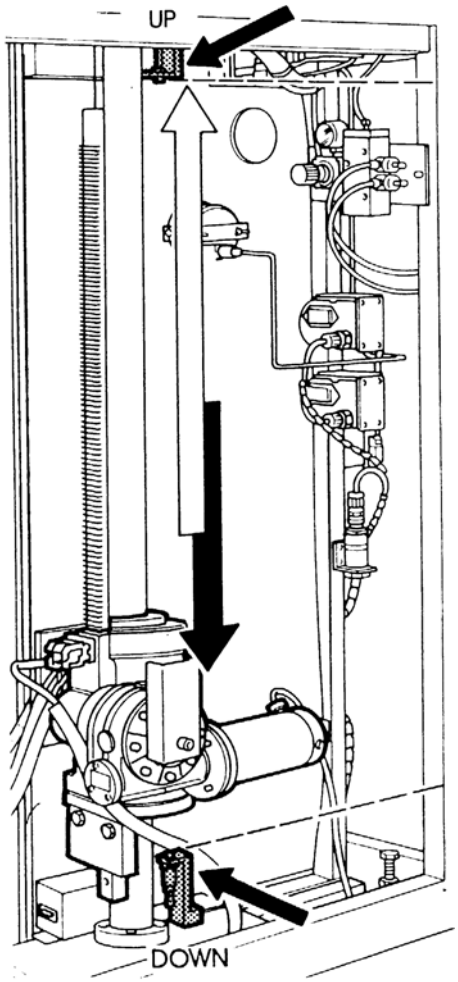

c. If the led sequence is different, identify which limit switch is causing the fault and adjust it. (see the **MAINTENANCE** chapter).

Procedure T4 (Safety sw port A and B lift and quartz-guard photocell)

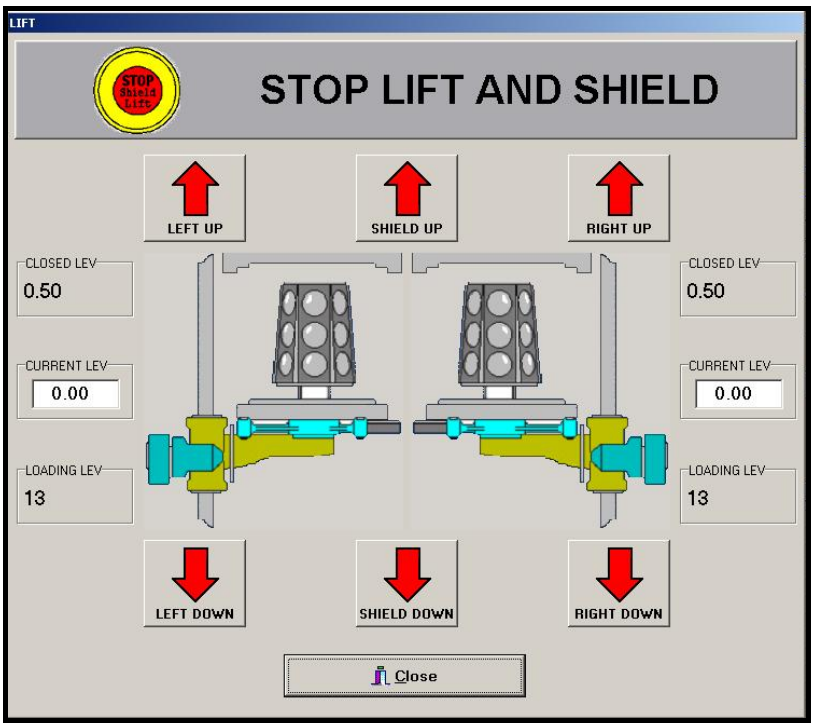

a. Using the Lift command page command window, move the elevator of the station in question (**A or B**).

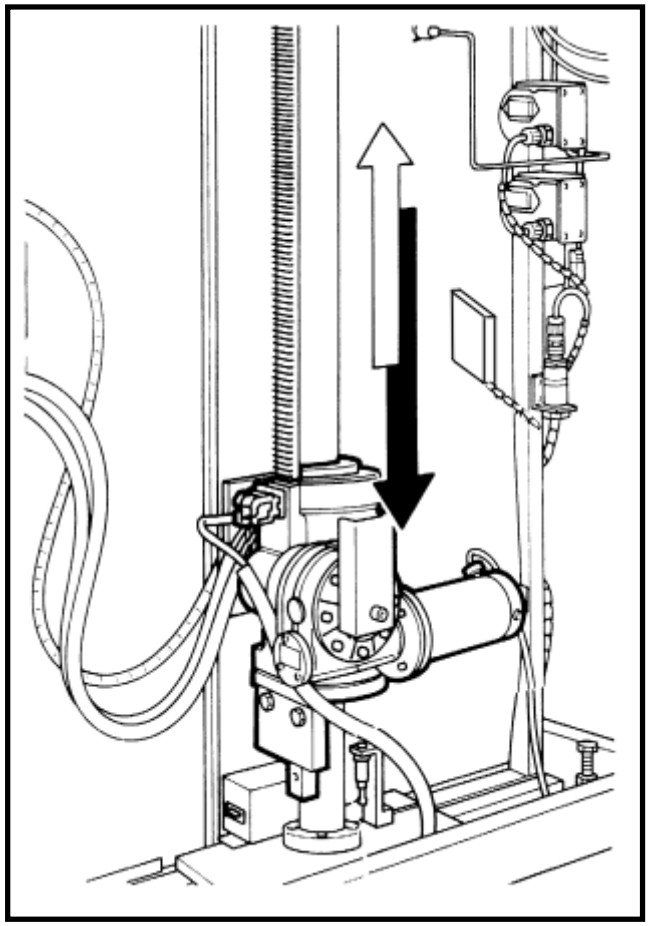

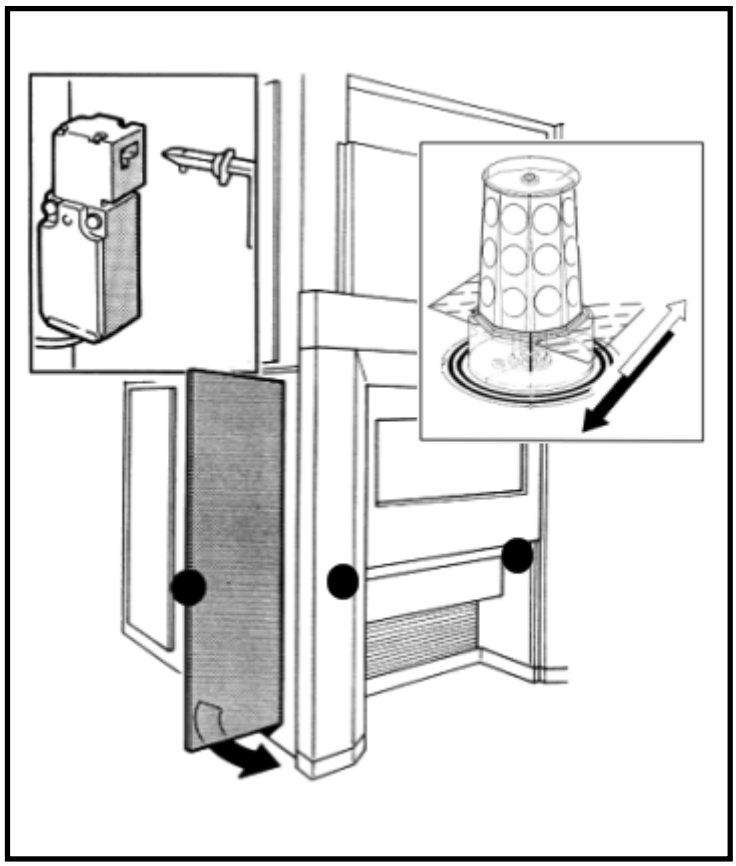

b. Make sure that, when the lateral doors are opened, the elevator stops and the **RED** indicator light illuminates on the **ALARMS page**.

b. Make sure that, when the quartz-guard is backed, the elevator stops and the **RED** indicator light illuminates on the **ALARMS page**. If it never trigger adjust the photocell sensitivity by means of the adjusting trimmer on it.

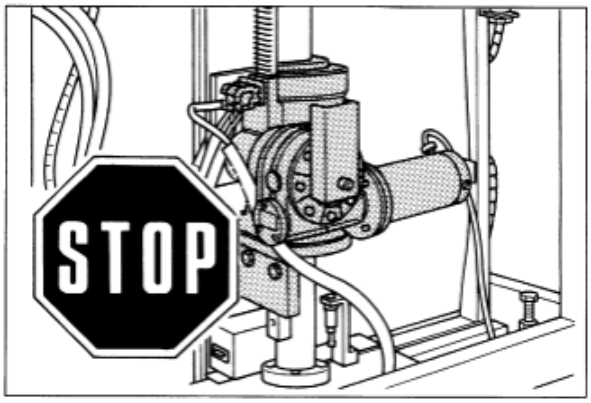

⚠ WARNING

The quartz-guard photocells are always in alarm, if the front semi-table is not in position.

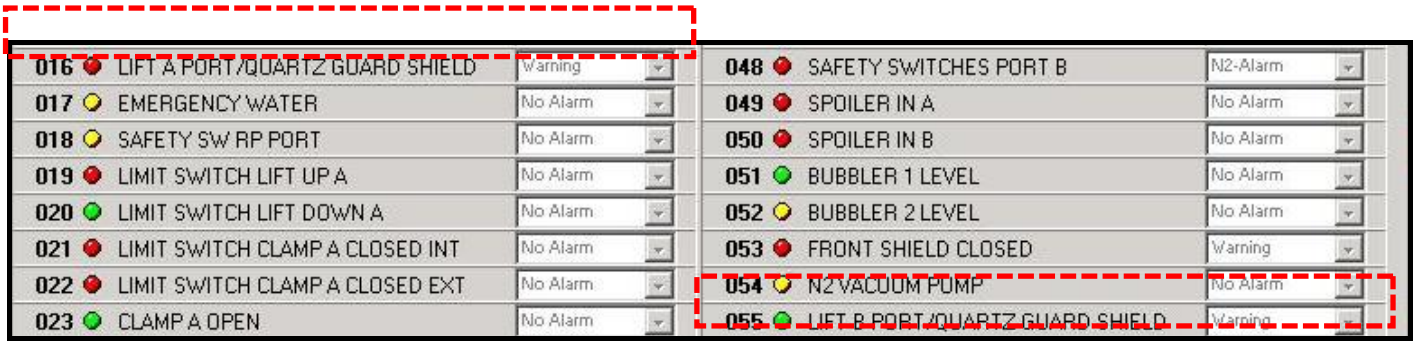

016	LIFT A PORT/QUARTZ GUARD SHIELD	Warning	048	SAFETY SWITCHES PORT B	N2-Alarm
017	EMERGENCY WATER	No Alarm	049	SPOILER IN A	No Alarm
018	SAFETY SW RP PORT	No Alarm	050	SPOILER IN B	No Alarm
019	LIMIT SWITCH LIFT UP A	No Alarm	051	BUBBLER 1 LEVEL	No Alarm
020	LIMIT SWITCH LIFT DOWN A	No Alarm	052	BUBBLER 2 LEVEL	No Alarm
021	LIMIT SWITCH CLAMP A CLOSED INT	No Alarm	053	FRONT SHIELD CLOSED	Warning
022	LIMIT SWITCH CLAMP A CLOSED EXT	No Alarm	054	N2 VACUUM PUMP	No Alarm
023	CLAMP A OPEN	No Alarm	055	LIFT B PORT/QUARTZ GUARD SHIELD	Warning

Procedure T5 (Rotation foot switch A/B)

a. While the shield is closed and the shutter-plate open, press the pedal (A or B) and check if:

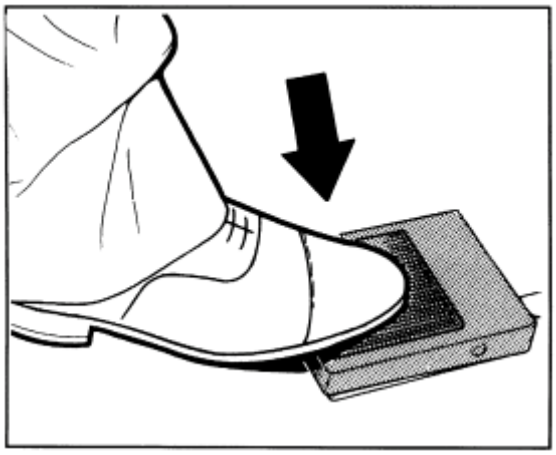

1 - the rotation rotates at **4 Revs/min**. It can be viewed through the inspection window on the fiberglass guard. By using as reference the cut on the pulley and a timer, verify the rotation speed. (4 RPM = 1 revolution for 15 sec).

2 - Check that the relevant **LED (24)** and **(64)** becomes **GREEN** on the **ALARMS/DIGITAL INPUT** page, if station **A or B** pedal is pressed.

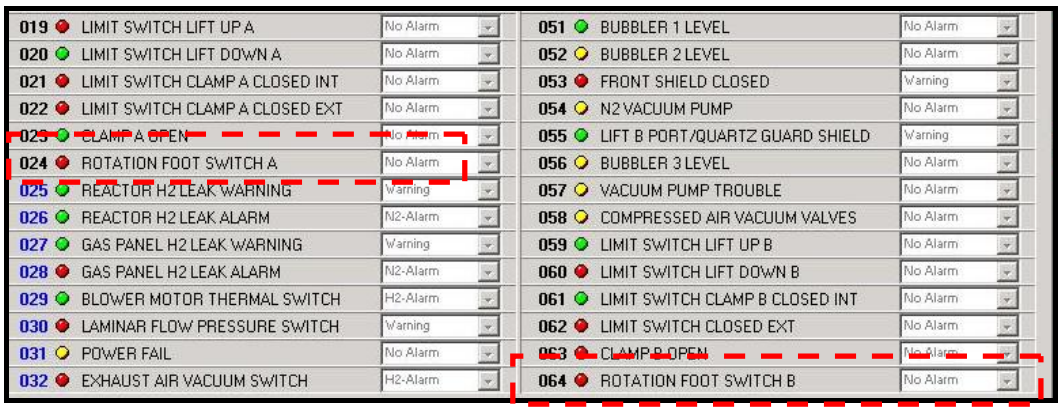

019	LIMIT SWITCH LIFT UP A	No Alarm	051	BUBBLER 1 LEVEL	No Alarm
020	LIMIT SWITCH LIFT DOWN A	No Alarm	052	BUBBLER 2 LEVEL	No Alarm
021	LIMIT SWITCH CLAMP A CLOSED INT	No Alarm	053	FRONT SHIELD CLOSED	Warning
022	LIMIT SWITCH CLAMP A CLOSED EXT	No Alarm	054	N2 VACUUM PUMP	No Alarm
023	CLAMP A OPEN	No Alarm	055	LIFT B PORT/QUARTZ GUARD SHIELD	Warning
024	ROTATION FOOT SWITCH A	No Alarm	056	BUBBLER 3 LEVEL	No Alarm
025	REACTOR H2 LEAK WARNING	Warning	057	VACUUM PUMP TROUBLE	No Alarm
026	REACTOR H2 LEAK ALARM	N2-Alarm	058	COMPRESSED AIR VACUUM VALVES	No Alarm
027	GAS PANEL H2 LEAK WARNING	Warning	059	LIMIT SWITCH LIFT UP B	No Alarm
028	GAS PANEL H2 LEAK ALARM	N2-Alarm	060	LIMIT SWITCH LIFT DOWN B	No Alarm
029	BLOWER MOTOR THERMAL SWITCH	H2-Alarm	061	LIMIT SWITCH CLAMP B CLOSED INT	No Alarm
030	LAMINAR FLOW PRESSURE SWITCH	Warning	062	LIMIT SWITCH CLOSED EXT	No Alarm
031	POWER FAIL	No Alarm	063	CLAMP B OPEN	No Alarm
032	EXHAUST AIR VACUUM SWITCH	H2-Alarm	064	ROTATION FOOT SWITCH B	No Alarm

Procedure T6 (Flow sw blower motor)

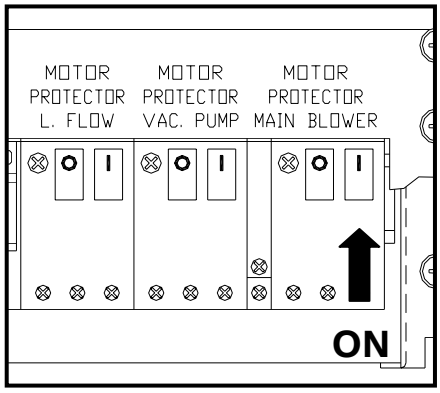

a. Switch ON the Main Blower and ensure that the relevant **LED** on the **ALARMS** page becomes **GREEN.**

019	LIMIT SWITCH LIFT UP A	No Alarm	051	BUBBLER 1 LEVEL	No Alarm
020	LIMIT SWITCH LIFT DOWN A	No Alarm	052	BUBBLER 2 LEVEL	No Alarm
021	LIMIT SWITCH CLAMP A CLOSED INT	No Alarm	053	FRONT SHIELD CLOSED	Warning
022	LIMIT SWITCH CLAMP A CLOSED EXT	No Alarm	054	N2 VACUUM PUMP	No Alarm
023	CLAMP A OPEN	No Alarm	055	LIFT B PORT/QUARTZ GUARD SHIELD	Warning
024	ROTATION FOOT SWITCH A	No Alarm	056	BUBBLER 3 LEVEL	No Alarm
025	REACTOR H2 LEAK WARNING	Warning	057	VACUUM PUMP TROUBLE	No Alarm
026	REACTOR H2 LEAK ALARM	N2-Alarm	058	COMPRESSED AIR VACUUM VALVES	No Alarm
027	GAS PANEL H2 LEAK WARNING	Warning	059	LIMIT SWITCH LIFT UP B	No Alarm
028	GAS PANEL H2 LEAK ALARM	N2-Alarm	060	LIMIT SWITCH LIFT DOWN B	No Alarm
029	BLOWER MOTOR THERMAL SWITCH	H2-Alarm	061	LIMIT SWITCH CLAMP B CLOSED INT	No Alarm
030	LAMINAR FLOW PRESSURE SWITCH	Warning	062	LIMIT SWITCH CLOSED EXT	No Alarm
031	POWER FAIL	No Alarm	063	CLAMP B OPEN	No Alarm
032	EXHAUST AIR VACUUM SWITCH	H2-Alarm	064	ROTATION FOOT SWITCH B	No Alarm

Procedure T7 (Door sw computer port)

a. Open one door of the electronics housing computer port at a time and check the series of the two micro switches. Make sure that the **RED** alarm is activated on the **ALARMS** page exactly when the door are open one at the time.

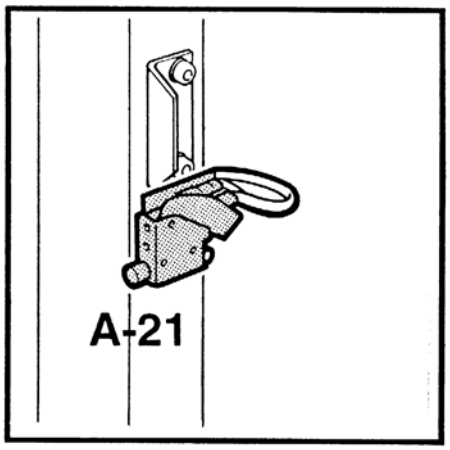

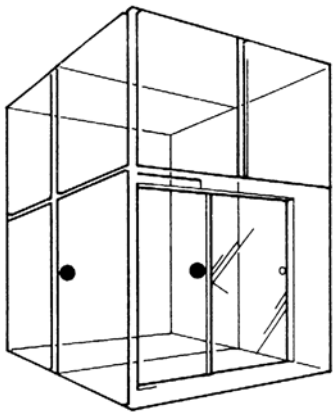

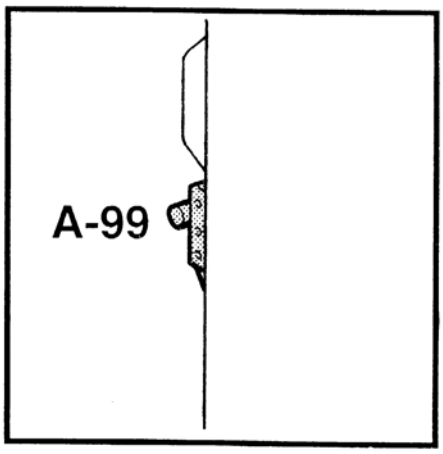

Procedure T8 (Bubbler 1/2/3 alarm) ©

This test must be performed as a final test in the customer's premises.

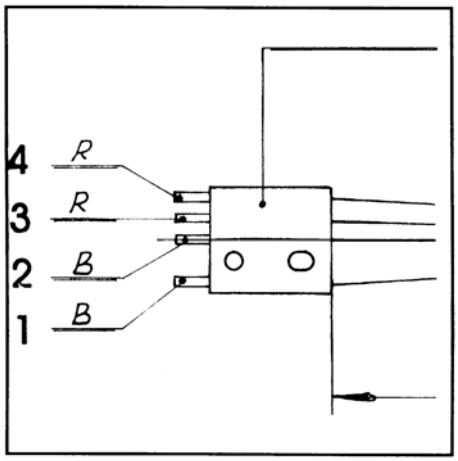

a. Unplug the connector and check that the status of the indicator light changes on the **ALARMS** page: **BUBBLER 1/2/3 ALARM** turns **RED** while contact between connector PIN 4 and 3 is open

Procedure T9 (Status Scrubber) ©

This test must be carried out as a final test at the customer's premises.

a. Simulate a fault to scrubber(customer's responsibility) and ensure that the relevant alarm is displayed on the **ALARMS** page .

Procedure T10 (Limit sw B - spoiler to A / Limit sw A - spoiler to B)

By Using the **Diagnostic**→ Spoiler command window, check the **SPOILER** efficiency**.**

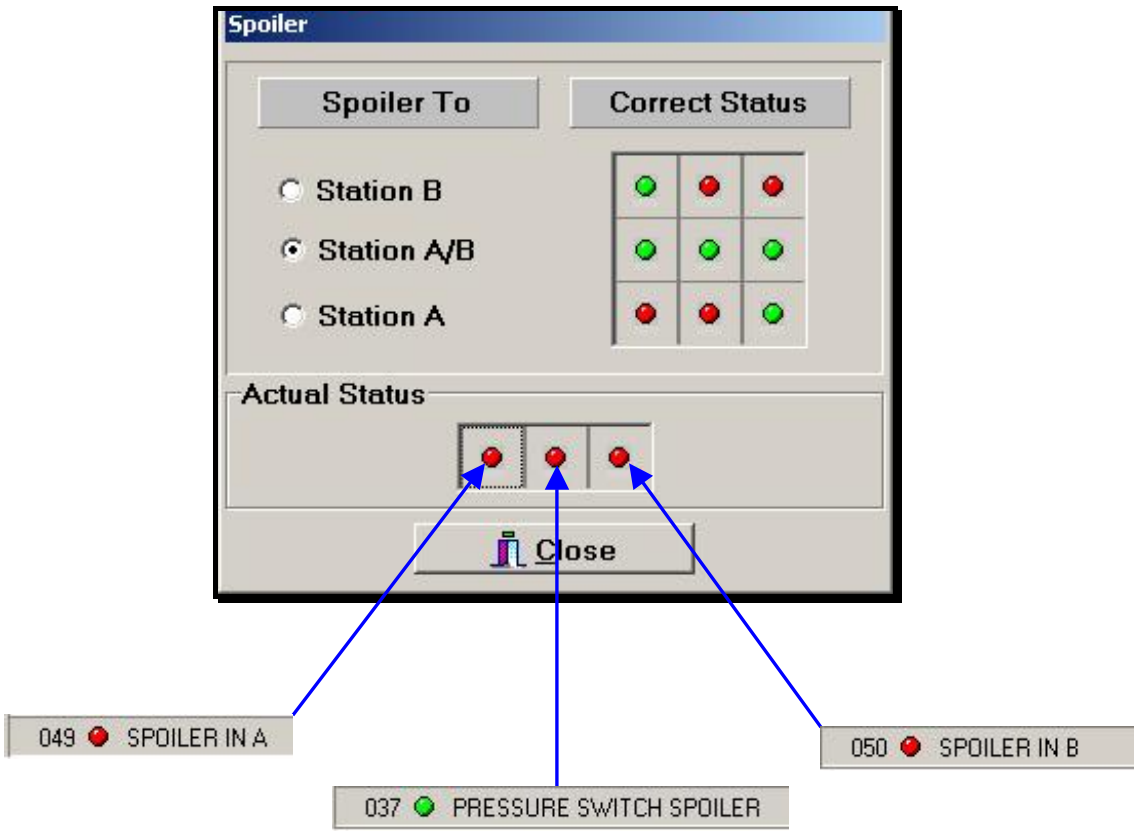

This window allows to command the spoiler movement.

By selecting with the mouse:

- **Spoiler to station B** the spoiler will move to the station B directing air to station A.
- **Spoiler to station A/B** the spoiler will move to the central position sending air in both stations.
- **Spoiler to station A** the spoiler will move to the station A directing air to station B.

As reference in the current status led table is shown the correct Proximity switch engagement.

- The left led, shown the status of side A spoiler proximity switch.
- The central led, shown the status of the spoiler air pressure switch.
- The right led, shown the status of side B spoiler proximity switch.

Compare the actual status field with the correct status field in order to verify the correct function of the spoiler group.

Procedure T11 (Bubbler 1 level - Bubbler 2 level)

a. Unplug the bubbler connector and check that the status of the indicator light changes on the **ALARMS** page: **BUBBLER 1 OR BUBBLER 2** turns **RED** while contact between connector PIN 1 and 2 is open.

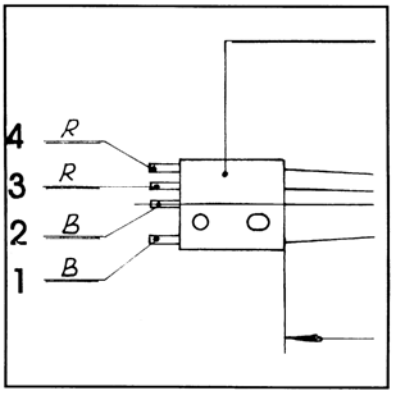

016	LIFT A PORT/QUARTZ GUARD SHIELD	Warning		048	SAFETY SWITCHES PORT B	N2-Alarm	
017	EMERGENCY WATER	No Alarm		049	SPOILER IN A	No Alarm	
018	SAFETY SW RP PORT	No Alarm		050	SPOILER IN B	No Alarm	
019	LIMIT SWITCH LIFT UP A	No Alarm		051	BUBBLER 1 LEVEL	No Alarm	
020	LIMIT SWITCH LIFT DOWN A	No Alarm		052	BUBBLER 2 LEVEL	No Alarm	
021	LIMIT SWITCH CLAMP A CLOSED INT	No Alarm		053	FRONT SHIELD CLOSED	Warning	
022	LIMIT SWITCH CLAMP A CLOSED EXT	No Alarm		054	N2 VACUUM PUMP	No Alarm	
023	CLAMP A OPEN	No Alarm		055	LIFT B PORT/QUARTZ GUARD SHIELD	Warning	

Procedure T 12 (Front shield closed)

a. By using the Lift command page move the **SHIELD** and check if the relevant **RED LED** lights on the **ALARMS** page.

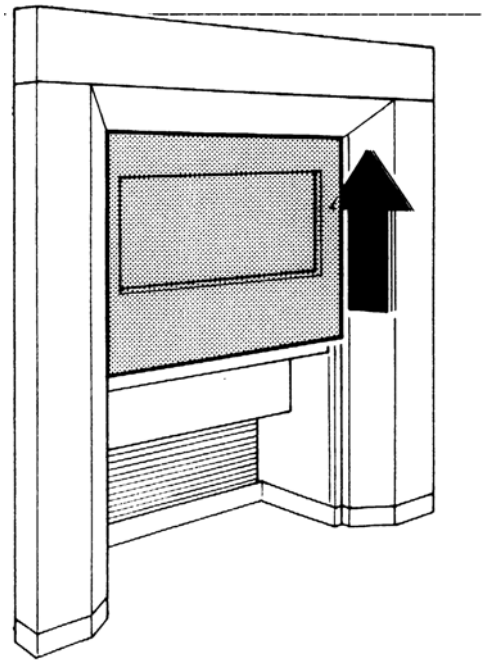

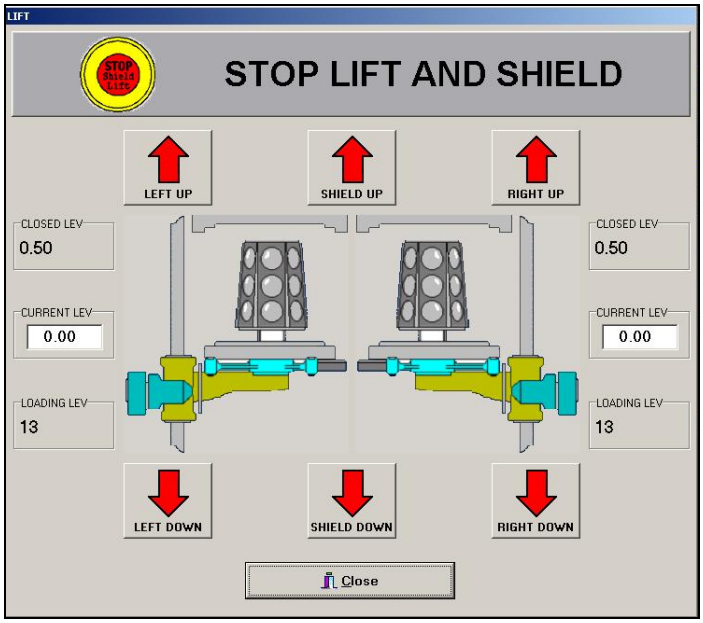
LIFT
STOP LIFT AND SHIELD
LEFT UP
SHIELD UP
RIGHT UP
CLOSED LEV
0.50
CURRENT LEV
0.00
LOADING LEV
13
CLOSED LEV
0.50
CURRENT LEV
0.00
LOADING LEV
13
LEFT DOWN
SHIELD DOWN
RIGHT DOWN
Close

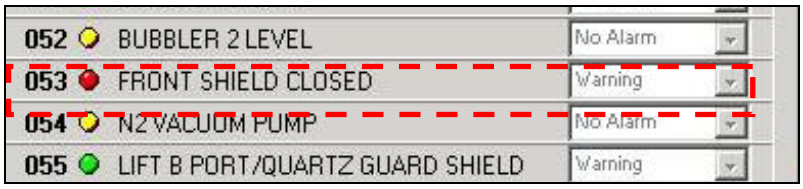
052 BUBBLER 2 LEVEL
No Alarm
053 FRONT SHIELD CLOSED
Warning
054 N2 VACUUM PUMP
No Alarm
055 LIFT B PORT/QUARTZ GUARD SHIELD
Warning

Procedure T13 (Panels, doors and pressure relief panels microswitch)

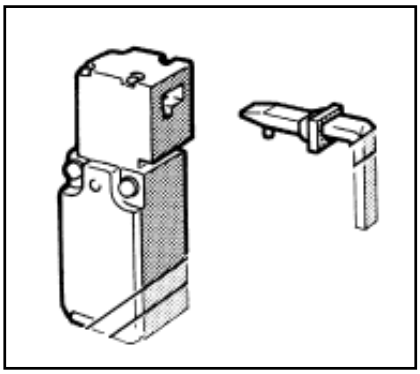

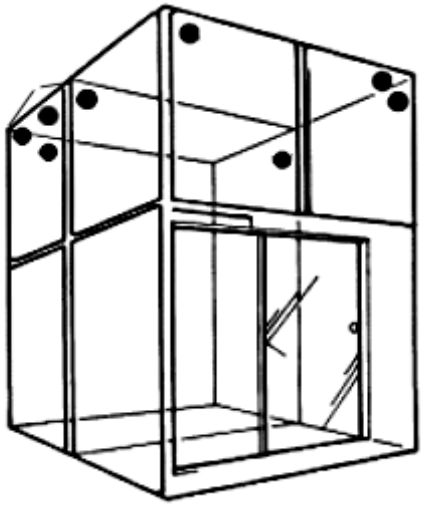

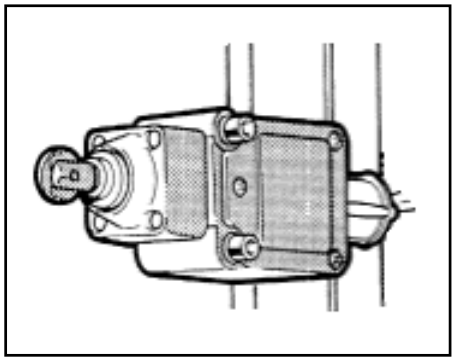

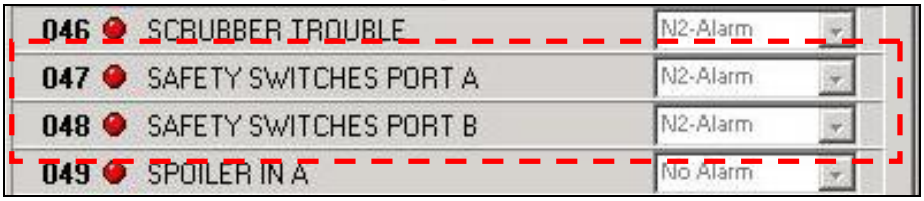

a. Open one of the panels or doors of the upper station or one of the pressure relief panel of the Reactor top at time and check the series of the microswitch.

b. Make sure that the **RED** alarm is activated on the **ALARMS** page exactly when the panel or the door are open one at the time.

REFERENCE GUIDE TO THE DRAWINGS MENTIONED IN THIS CHAPTER

- **RE4196** **Chlorosilane Bubbler**
- **RH4847E...** **Rack driver/power supply**
- **RH4847E...** **Terminal board**
- **RH5070U1** **Air group**
- **RH5090U2** **Vacuum test group (lay out)**
- **RH5200U1 - U2** **Reactor components/groups**

(THE DRAWINGS ARE AT THE VOLUME 3 - CHAPTER 26)

ORDER OF INSTALLATION

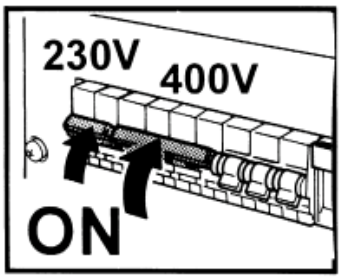

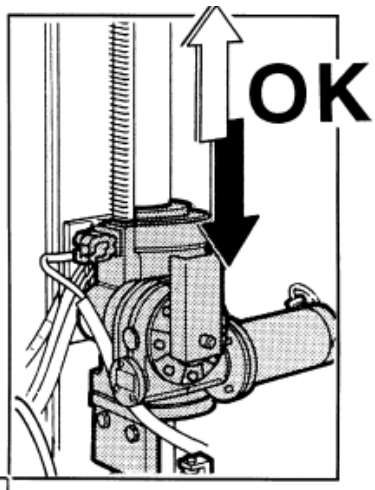

1. **Quartz plate**
2. **Quartz tubes for cap and bell-jar**
3. **Quartz elements and shutter-plate**

Power up the reactor and check if the elevators are moving correctly, by consulting the instructions in the OPERATING MANUAL.

Select the maintenance PROGRAM.

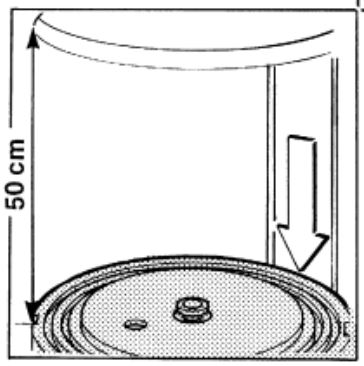

1. Fitting the quartz plate.

a. Allow the shutter-plate to drop by at least 50 cm.

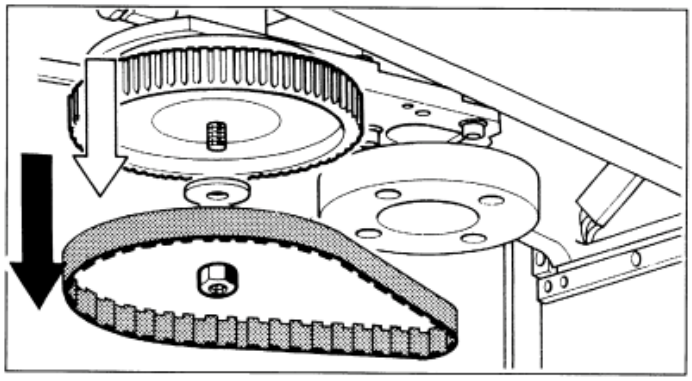

b. Unscrew the nut and belt and remove the pulley.

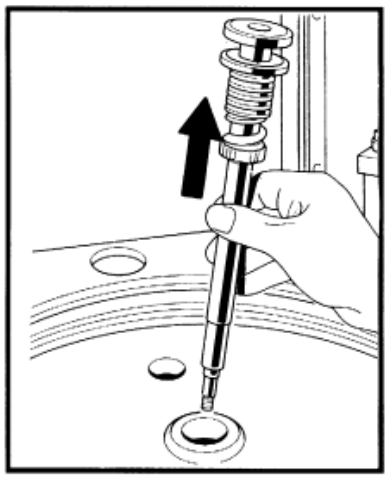

c. Remove the shaft.

d. Unscrew the ring-nut **(H-5)**, spring **(H-4)** and pusher **(H-3).**

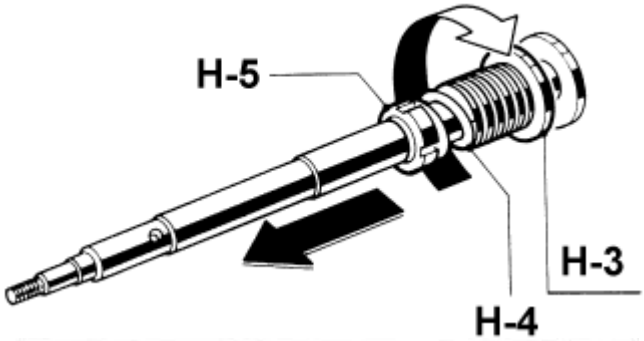

Note: to perform this operation clamp the shaft (H-7) with a vice in the clamping area, in horizontal position

CAUTION

Interpose a soft metal plate between the shaft and the vice's jaw (ex. Aluminum) no to damage the shaft

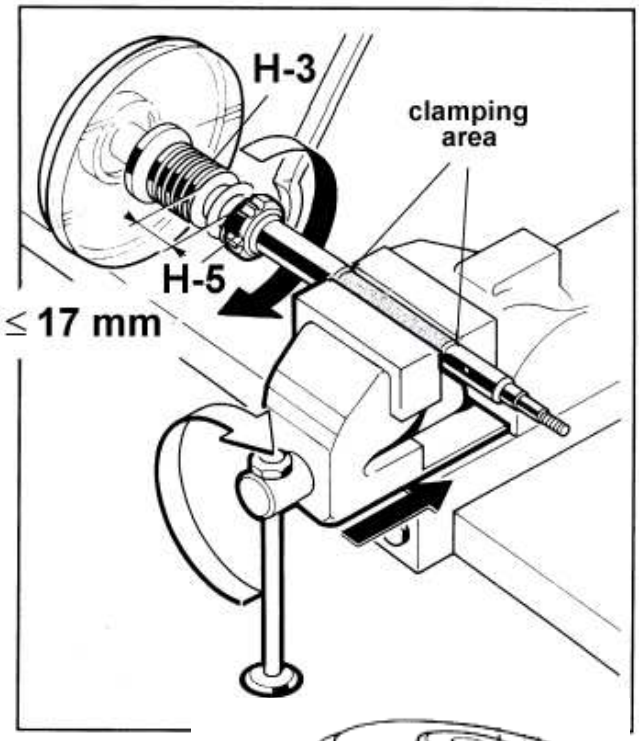

e. Fit the plate **(H-2)** the step must face the shaft end pusher **(H-3)** and spring **(H-4)** correctly and screw the ring-nut **(H-5)** fully down.

CAUTION

Check that the gap between the pusher end **(H-3)** and the ring head **(H-5)** is not higher **17 mm**

f. Re-fit the assembled shaft on the shutter-plate and re-install the pulley, belt and nut.

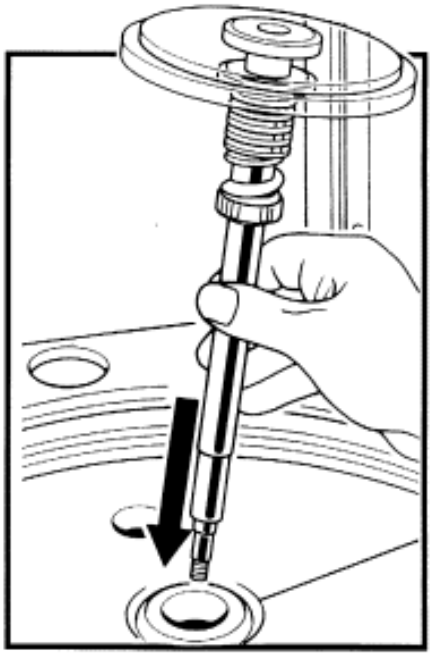

g. Do not position the rotation unit guard as yet.

QUARTZ SUPPORT PLATE FLATNESS CONTROL SYSTEM

Place a centesimal comparator with magnetic base onto shutter plate. Place comparator tip on Susceptor support tube rest surface and use foot-lever to rotate the quartz support plate. Measure max and min points. The difference between the two points must not be greater than 13 hundredths. When this value is exceeded, replace the rotation shaft or some of its internal components (teflon bush, pusher, spring, bearing, seals).

2. Installing quartz tubes for cap and bell- jar

Two people are required for this job:
one operates the LIFT
(LIFT Command) and
one holds the ball-jar cap
during bell-jar
assembly (see below).

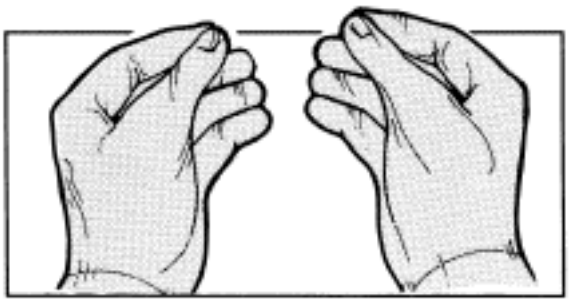

Use clean and rubber latex gloves for
The following operations

a. Insert the Teflon ring gasket **(I-8)** under the quartz flange.

b. Position the half-rings **(I-9)** under the Teflon gasket.

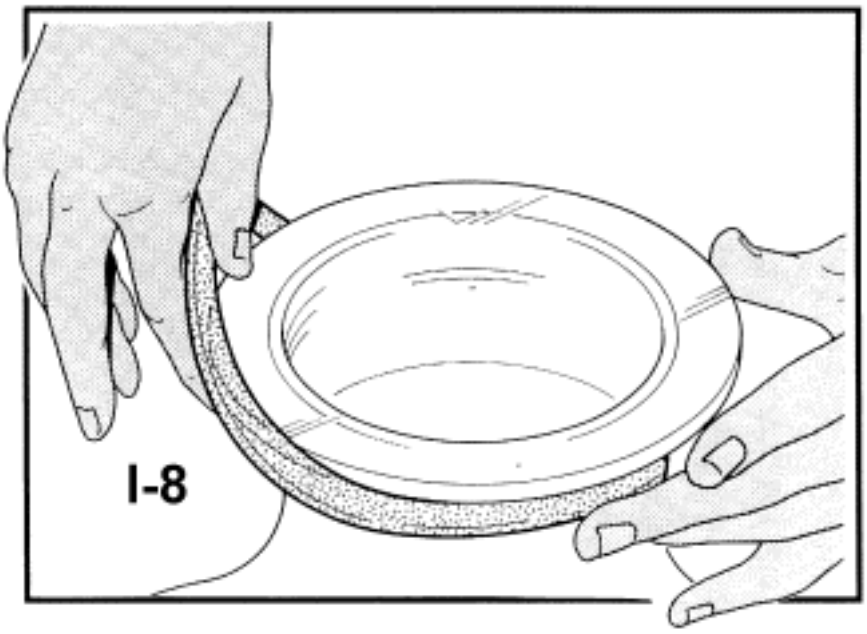

c. Put the ring **(I-10)** and thighten with the screw **(I-11)** not excessively.
Control that the group must be Free to rotate around the bell-jar upper flange

ATTENTION: Verify that both the half rings **(1-9)** have the same number stamped on them in order to prevent any damages of the bell-jar.

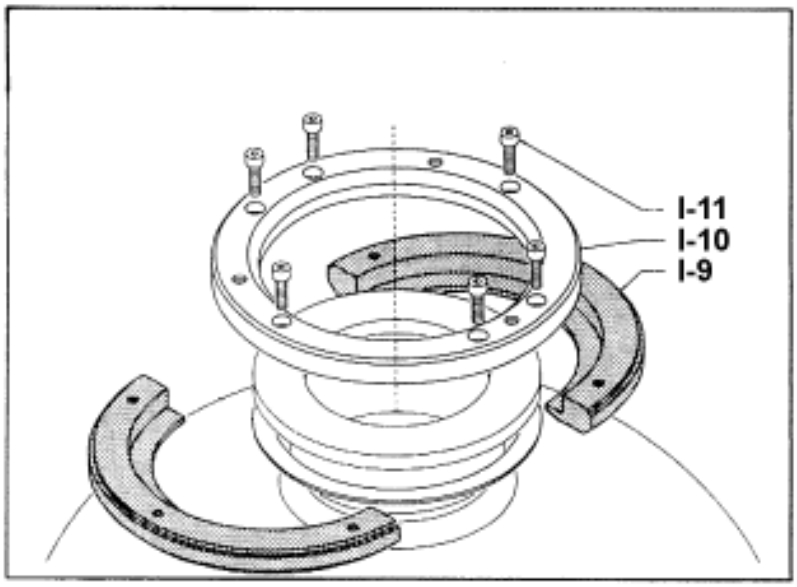

d Remove the cap cover.

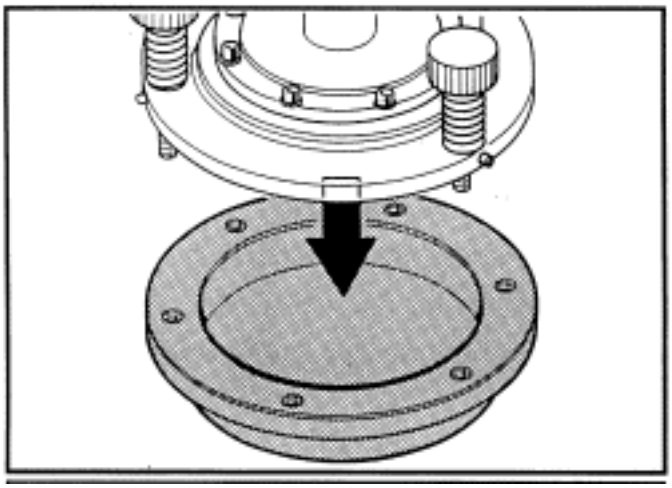

e Insert the O-ring **(I-25)** on the tube in **its former position.**

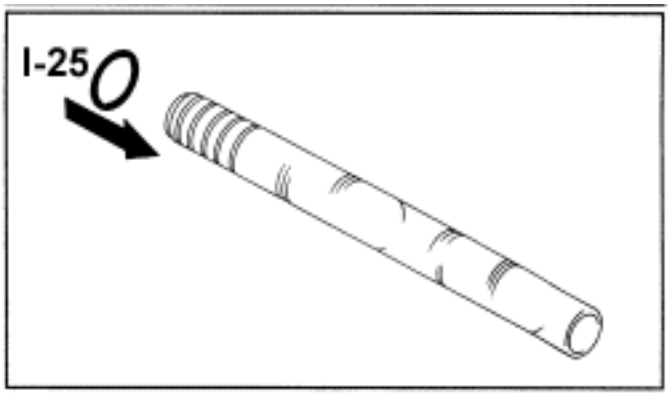

f Insert the tubes **(I-27)** with the O-ring into the ring nut **(I-26).**

g Insert the tube with ring nuts into the cap slots.

h Screw the ring nuts **(I-26)** and tighten them up by hand.

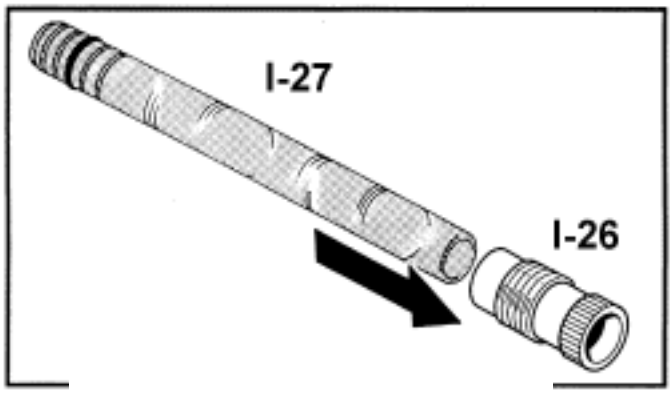

WARNING

Allow the tubes to project by 110 mm from the cap (INITIAL DISTANCE FOR REACTOR START-UP STATE).

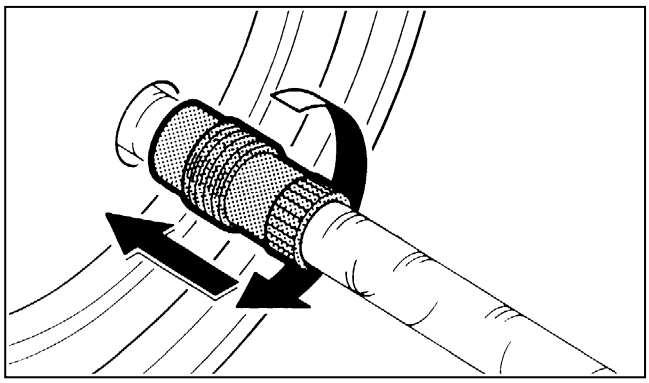

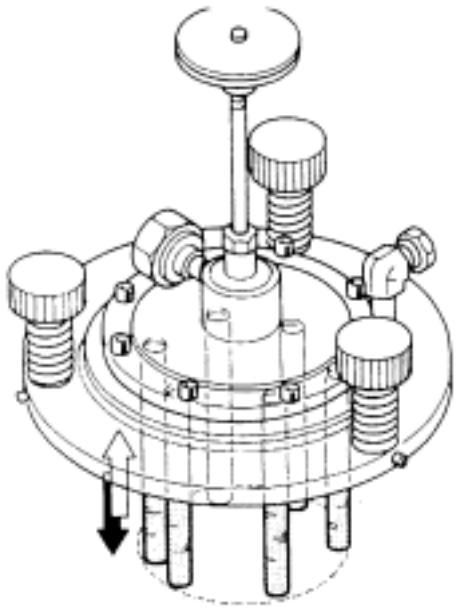

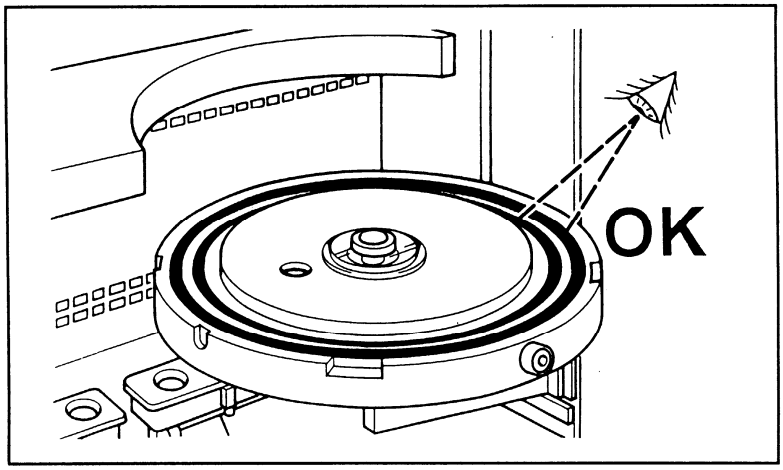

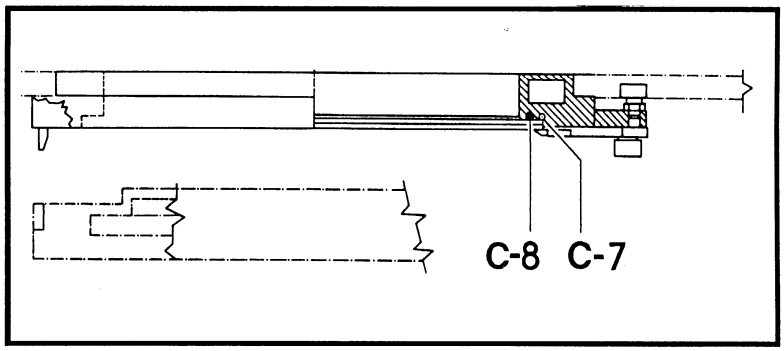

i WARNING

MAKE SURE THAT THE O-RINGS OF THE SHUTTER PLATE, UPPER RING, AND THE SILICON TUBULAR GASKET ARE CORRECTLY FITTED IN THEIR SEATS, AND THAT THERE ARE NO FOREIGN BODIES LEFT BEHIND ON THE SHUTTER PLATE: BELL-JAR BREAKAGE HAZARD.

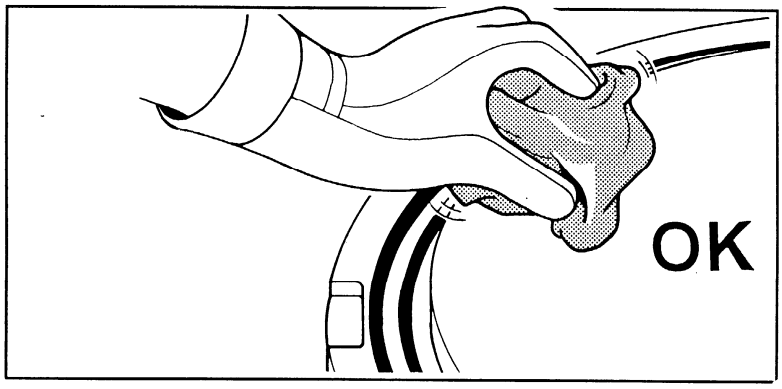

j Fit the two O-rings on the EXHAUST VALVE (or check if correctly positioned)

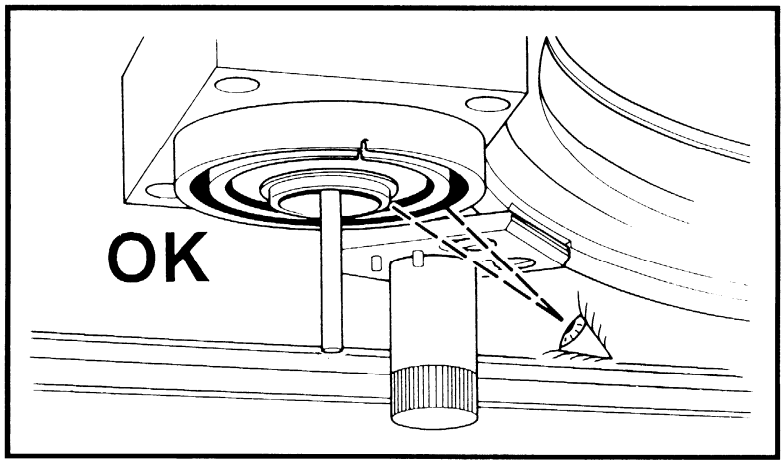

k Position the bell-jar on the shutter plate.

⚠ CAUTION

Remember:
Use the Bell Jar round shoulder in Reduced Pressure applications

Use the Bell Jar square shoulder in Atmospheric applications

Use the Bell Jar square shoulder with reflective coating in Atmospheric applications
(**see vol.3 chapter 24 page 168**).

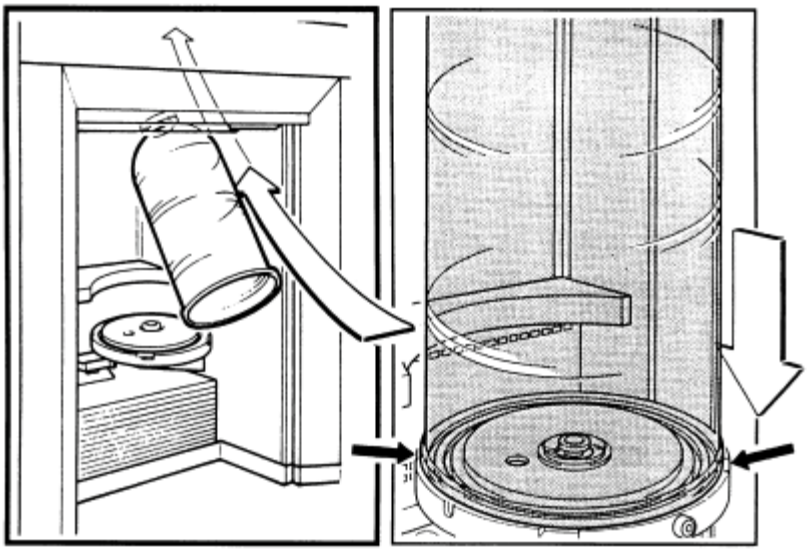

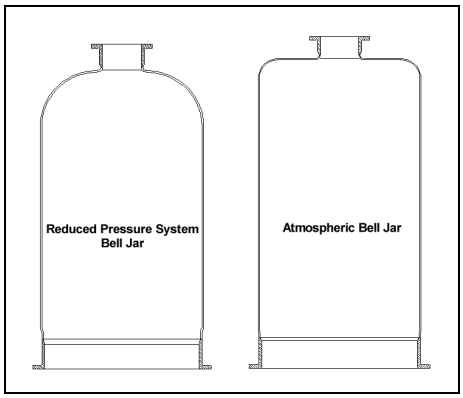

l Perform a careful centering of the bell-jar on the shutter plate, by centering it on the outer edge of the shutter plate.

m Hold the bell-jar cap **(group I)** carefully, paying attention to the centering between the quartz tubes and the bell-jar.

n When ready ask the other person to lift up the bell-jar and the shutter plate (lift command). The other person **must** be ready to stop the lift movement in case of need.

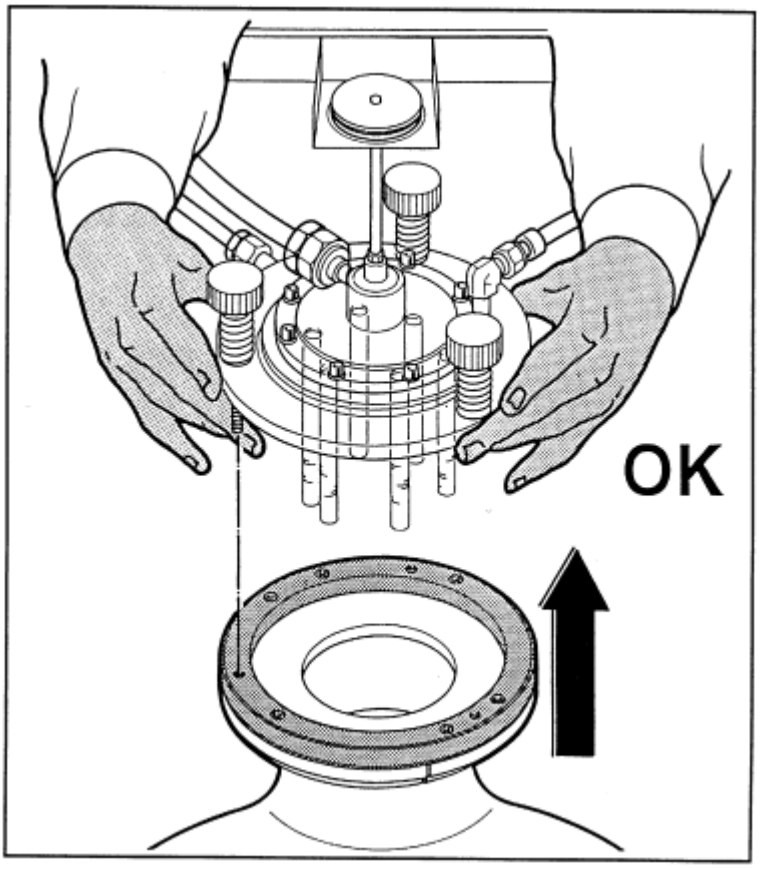

CAUTION

HOLD CAREFULLY THE BELL-JAR CAP WHEN THE BELL-JAR IS GOING UP AND MAKE SURE THERE IS NO CONTACT AT ALL BETWEEN THE BELL-JAR AND THE QUARZT TUBES (I-27). IN CASE OF CONTACT IMMEDIATELY ASK THE OTHER PERSON TO STOP THE LIFT MOVEMENT. IN CASE OF INTERFERENCE THE QUARTZ TUBES CAN BE BROKEN.

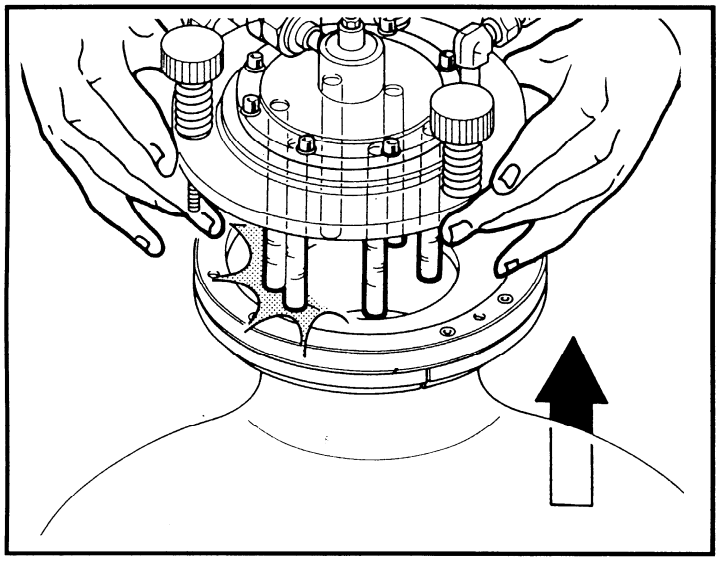

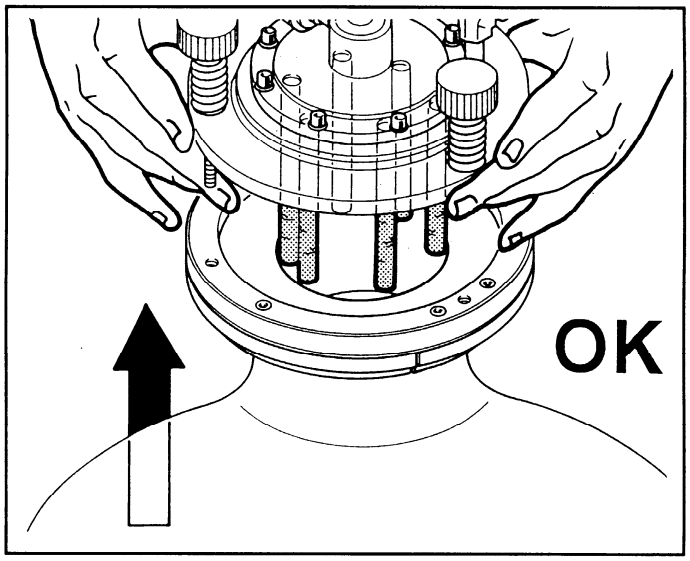

p Lift the shutter plate to the closed position.

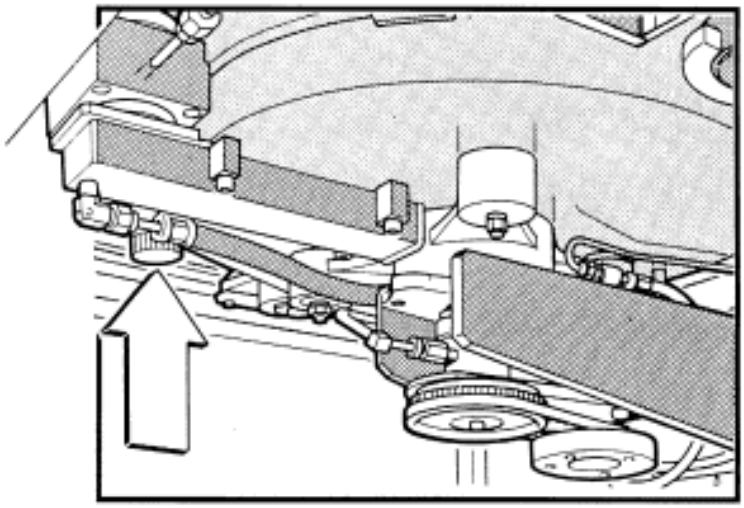

q Close the bell-jar supports turning the knob on the two slides **(C-4)** (the arrows marked on the two knobs must point inside)

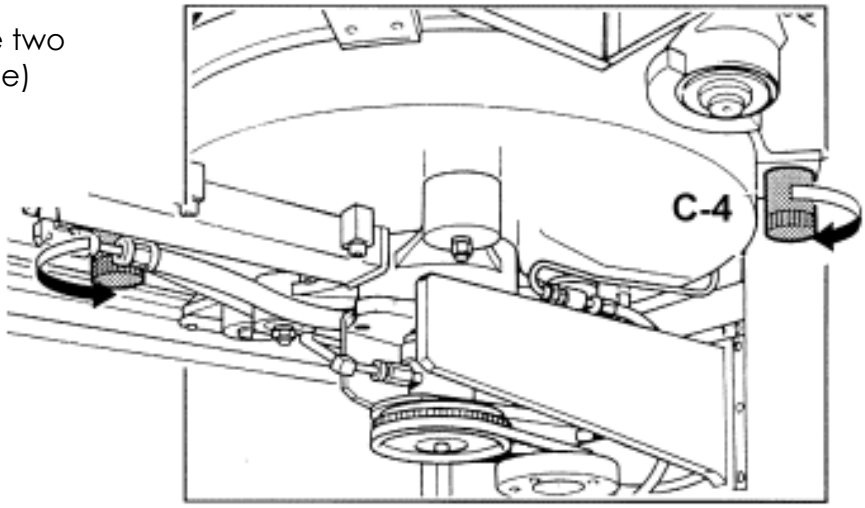

r Reassemble and tighten the bell-jar cap knobs **(I-1)**, uniformly and fully.

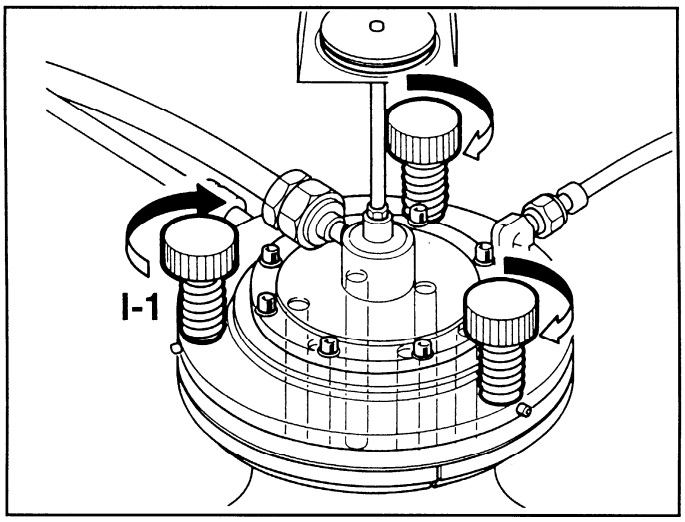

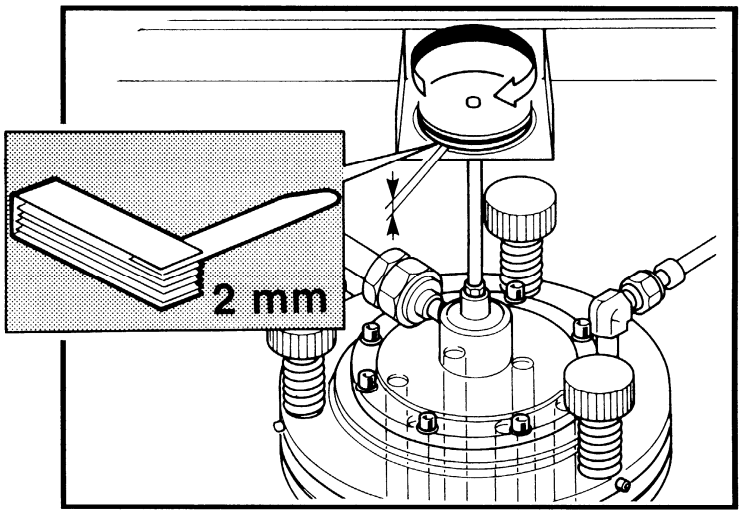

s Screw the brass ring to allow **2 mm** clearance from the cap support and tighten the securing dowel.

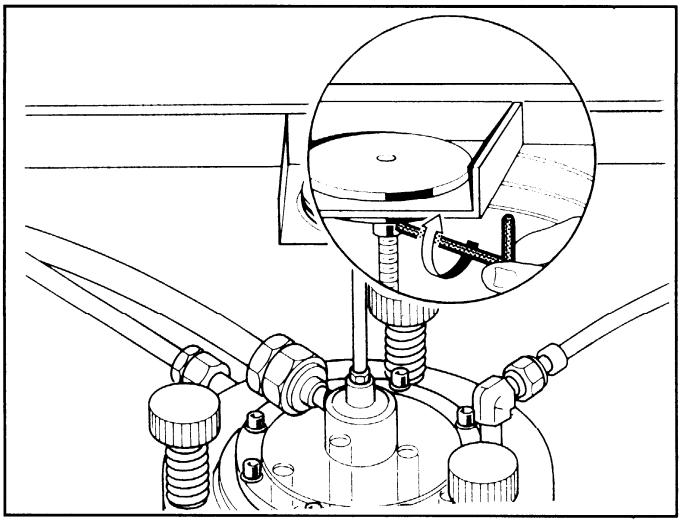

3. Installation shutter-plate quartz elements

With the shutter-plate lowered to its travel limit:

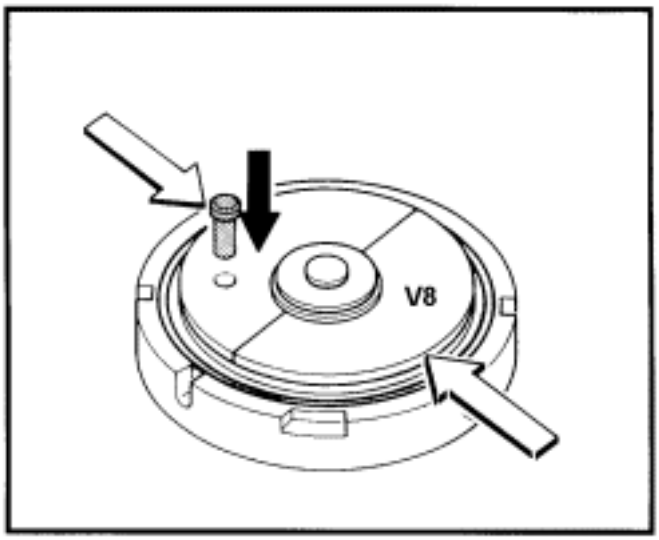

a. Install the two half-rings (**V8**) and fit the graphite bush.

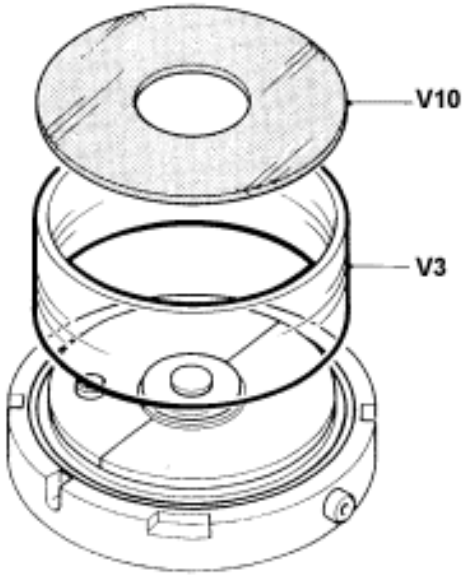

b. Fit the spacer ring (**V3**) and the top disk (**V10**).

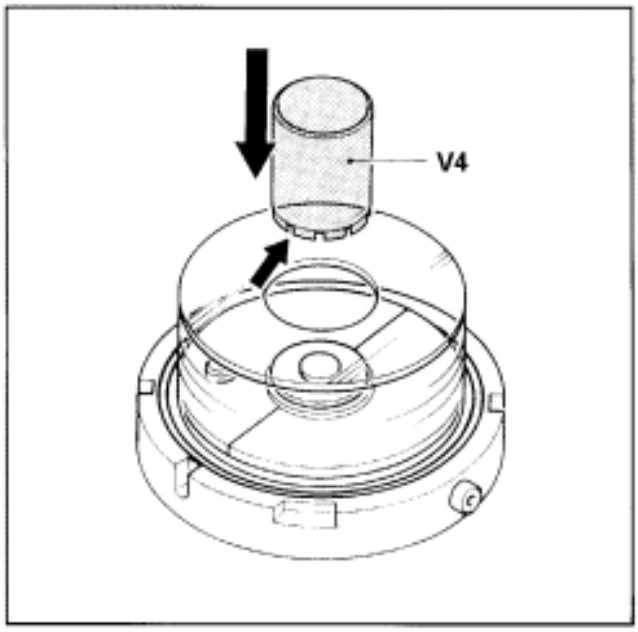

c. Fit the cup (**V4**) with its slots facing down.

d. Fit the drain tube (**V5**).

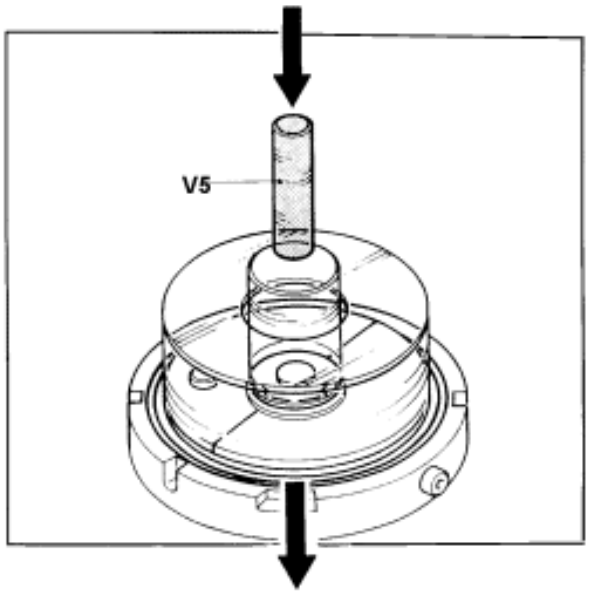

e. Position the susceptor base (**V11**).

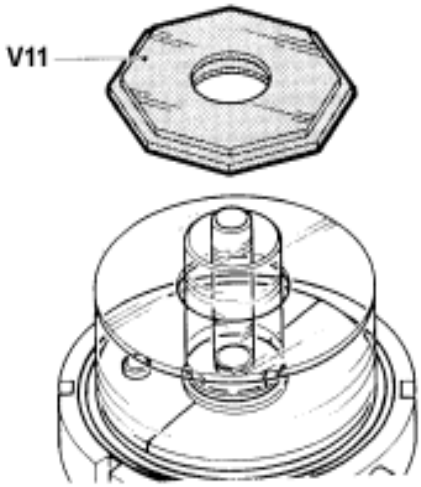

f. Position the susceptor (**V12**) on its base and center it.

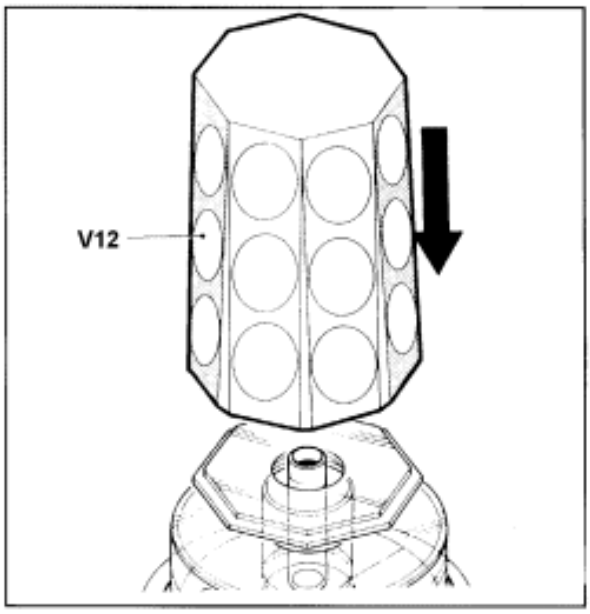

g. Position the cap (**V14**).

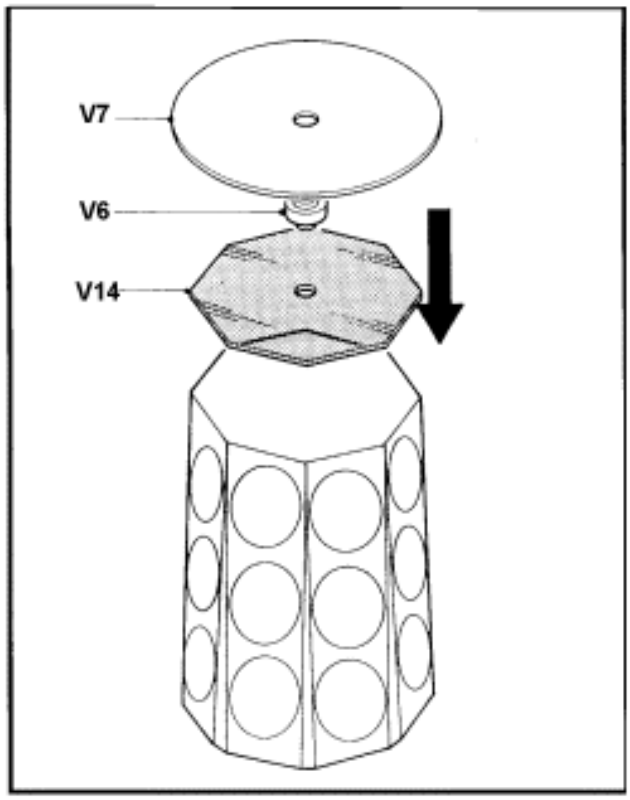

h. Fit the spacer (**V6**) in the cap hole, and locate the upper quartz disk (**V7**).

i. Position the centering marks about **3 mm** from the susceptor edge.

While turning the unit with pedal, check if the susceptor and upper disk are correctly centered, locating the susceptor rotation limit with respect to the reference points – if necessary, re-center it.

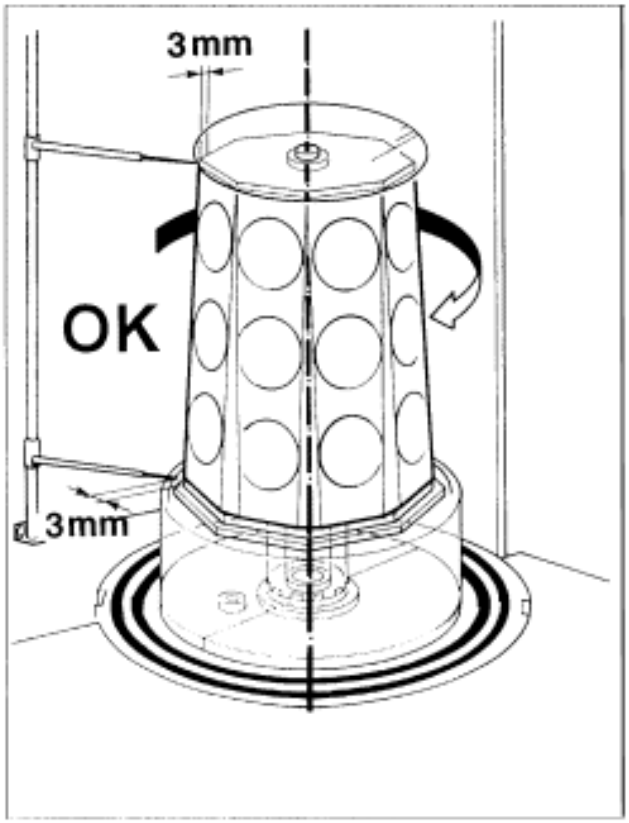

NOTE Check centering whenever the susceptor is positioned.

j. Close the shutter-plate.

NOTE: IF USING THE SUSCEPTOR TROLLEY (OPTIONAL) TO PLACE AND REMOVE THE SUSCEPTOR, SEE THE FOLLOWING INSTRUCTION

Be sure that the control is always in Maintenance Program

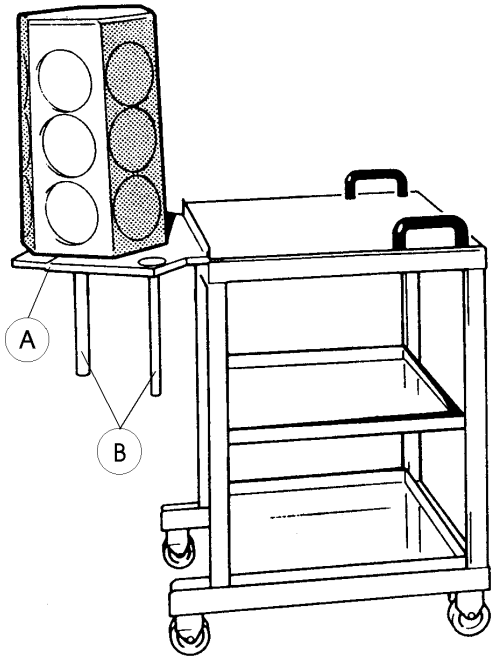

1. Remove of the Susceptor

1.1 Lower the shutter plate. The susceptor base should be **approximately 80 mm** over the table level. Check that the fork (**A**) of the trolley is inserted in the space between the spacer ring (**V3**) and the susceptor (**V12**)

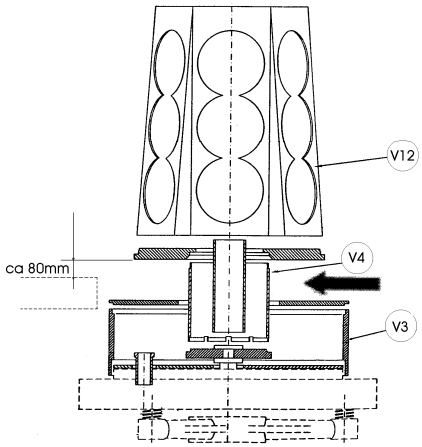

1.2 Insert the trolley as long as the two pivots (**B**) stay in contact with the shutter plate

1.3 Lower completely the shutter plate

> ⚠ **CAUTION**
> Check that the cup (**V4**) is disconnected to susceptor (**V12**)

1.4 Extract with caution the trolley

2. Positioning of the susceptor

> ⚠ **ATTENTION**
> Provided that the susceptor to be not moved. If the susceptor is moved or is new, follow the centering procedure, described in the preceding pages

2.1 Check that all quartz ware is in correct place

2.2 Follow the remove procedure to the contrary

> ⚠ **CAUTION**
> Stop the lift to inserted of the cup (**V4**) into susceptor (**V12**)

k. Re-position the table.

l. Exit the maintenance menu.

INTRODUCTION

This chapter concerns the jobs (settings, tests, etc.) to be carried out before generator START-UP.

CONTENTS

1. Pressure switch setting
- **Exhaust air vacuum switch**
- **Spoiler pressure switch**
- **Cooling air pressure switch**

2. GAS PANEL TEST
3. FLOWMETER TEST
4. BUBBLER purging and filling
5. LINE CONDITIONING (HCl and Doping substances)
6. GENERATOR SETTING
7. TEMPERATURE SETTING
8. SILICON WAFER LOADING
9. INITIAL PRODUCTION TESTS
- **Attachments**
- **Intrinsic**
- **Test run**
- **Crystallographic characteristics**

1. PRESSURE SWITCH SETTING

The following pressure switches were set during the PRELIMINARY CHECK PROCEDURES (chapter 14).

As the reactor is now fully connected, the FINAL TEST for flowerets can now be run.

a. PROCEDURE C5 (Exhaust air vacuum switch)

Set-point: -3 mbar.

1. Power up the reactor air exhaust fan (customer's responsibility).
2. Switch off the fan and check if the **LED** red lights on the **ALARMS** page (see relevant screen).

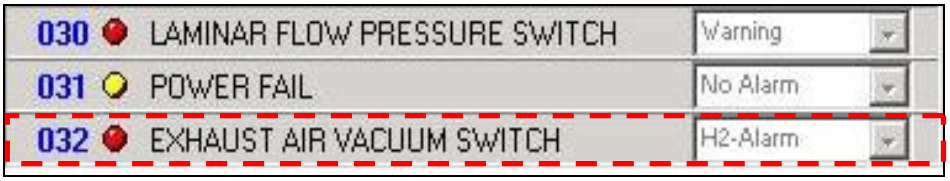

3. If the **LED** does not switch on, consult **the "Exhaust air vacuum switch"** chapter in the **TROUBLESHOOTING manual.**

b. PROCEDURE C5 (Spoiler pressure switch)

Set-point: 6 mbar.

1. Close all the upper station panels.
2. Power up the **MAIN BLOWER**.

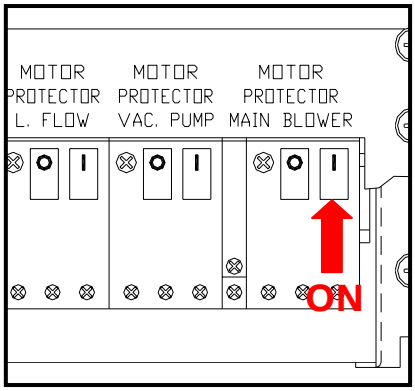

3. Access to the Diagnostic → Spoiler Command window.

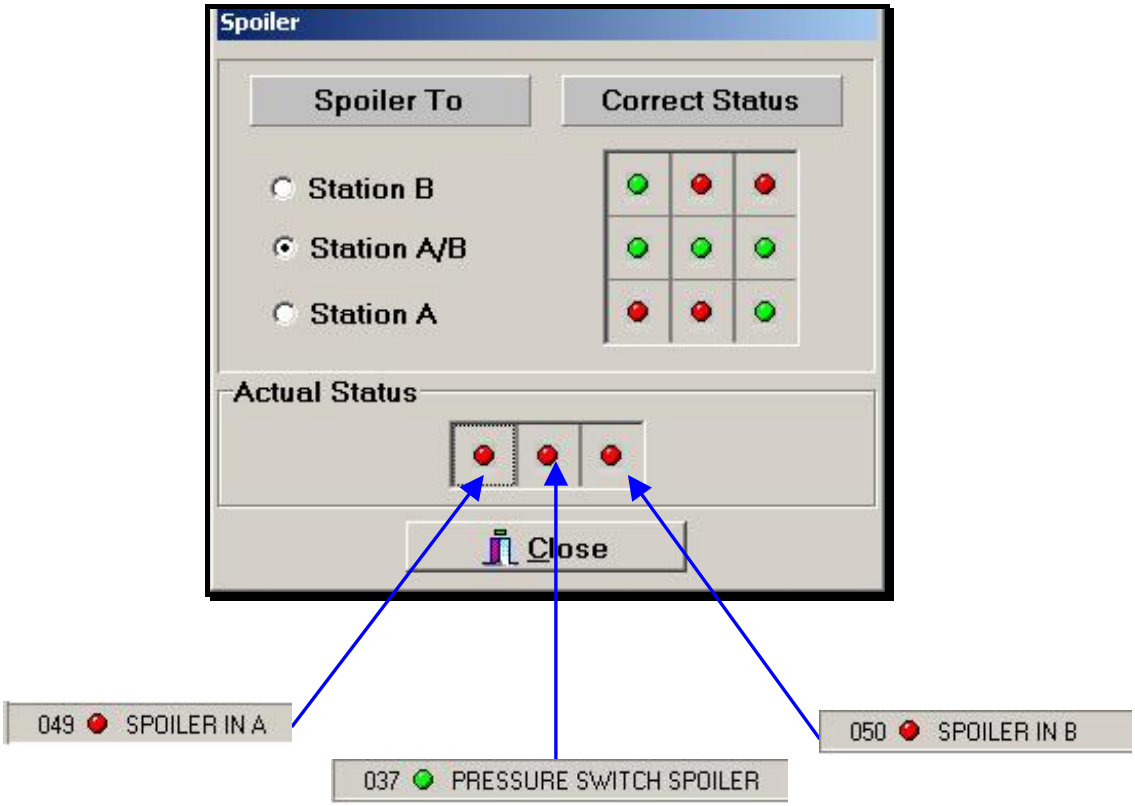

4. Move the Spoiler and check if the **LED** corresponding to the Pressure Switch spoiler follows exactly the reference table in the current status field.
5. If one or more **LEDs** are inefficient, refer to chapter **"SPOILER PRESSURE SWITCH"** in the TROUBLESHOOTING manual.

c. PROCEDURE C5 (Cooling air pressure switch)

Set-point: **2-3 mbar**.

1. Power up the **MAIN BLOWER.**

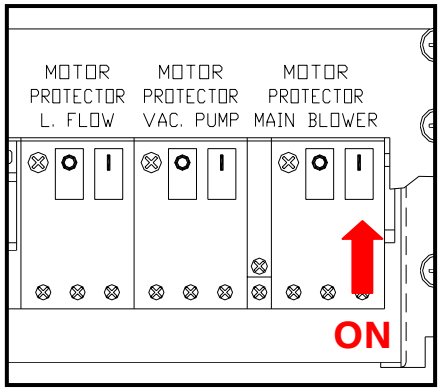

2. Look and see if the **LED** corresponding to the **ALARMS DIGITAL INPUT** page turns **GREEN .**

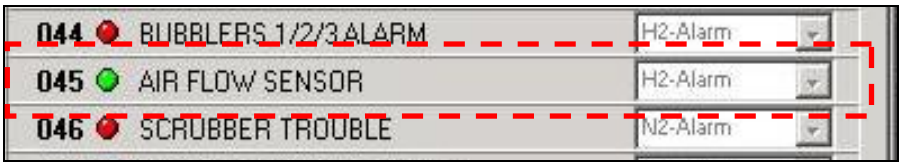

3. Power down the **MAIN BLOWER** and see if the relevant **LED** switches.

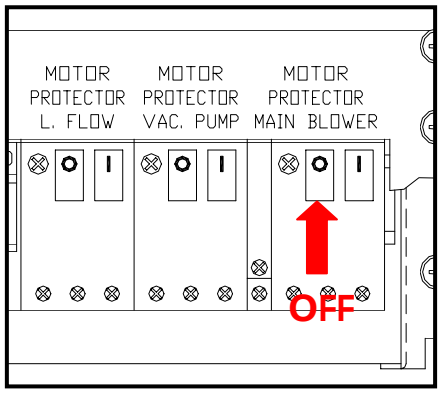

4. If the **LED** does not switch correctly, consult chapter "**COOLING AIR PRESSURE SWITCH**" in the **TROUBLESHOOTING manual.**

2. GAS PANEL TEST

NOTE 1: The gas panel is delivered to the customer pressurized with nitrogen at approximately 1 bar. This pressure value is indicated with a reference line on the pressure gauges (EXCEPT PR3, M2/M3).

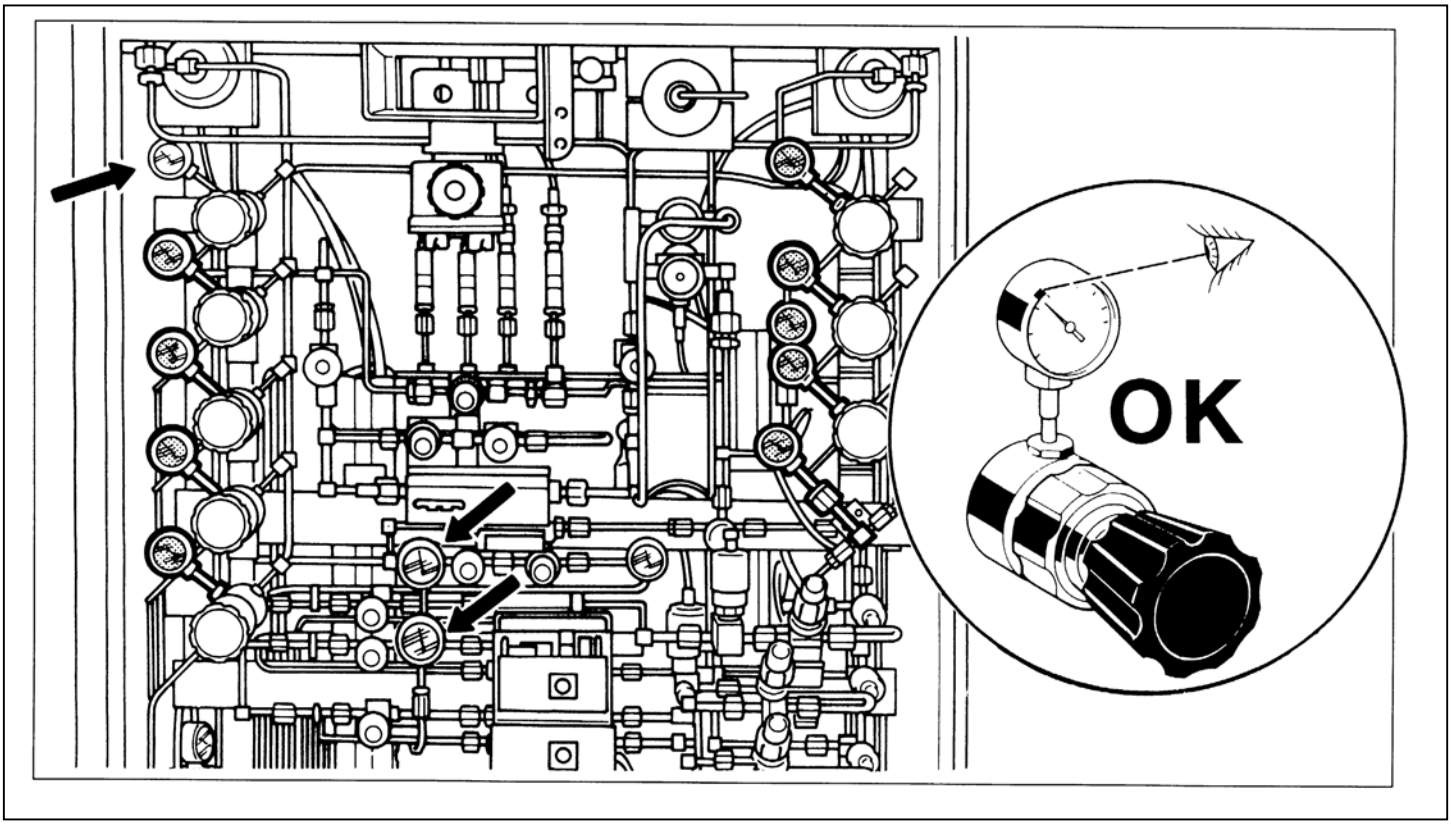

⚠ CAUTION

IF THE PRESSURE VALUES ARE VERY DIFFERENT FROM THE STATED VALUE, CONTACT LPE BEFORE OPENING THE INLET VALVES.

NOTE 2: For dangerous gases (phosphine, PH3, diborane, B2, hydrochloric acid, and HCL), the customer's supply panels must be equipped with a by-pass system enabling non harmful gases (N2 H2) to be supplied for purging and setting.

⚠ CAUTION

BEFORE RUNNING THE GAS PANEL TEST, DOING FLOWMETER CHECKS AND OPENING THE GAS METERING UNIT, MAKE SURE THAT:
1. Bell-jars, susceptors and quartz elements have been correctly installed.
2. All user lines reaching the rector have been tested and are under pressure (bubblers included).
3. Scrubber is connected and efficient (user's responsibility).

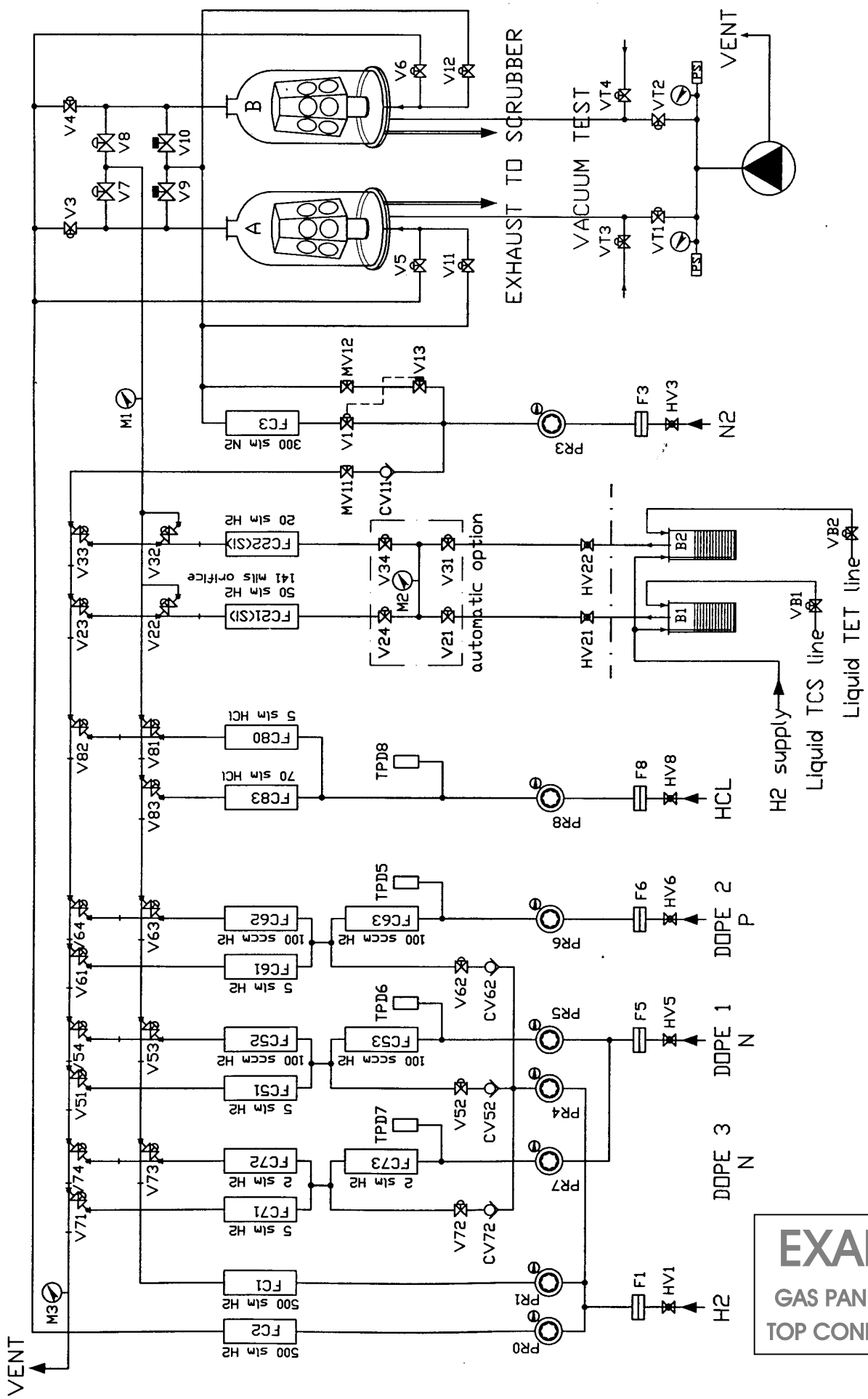

EXAMPLE

GAS PANEL SCHEME

TOP CONFIGURATION

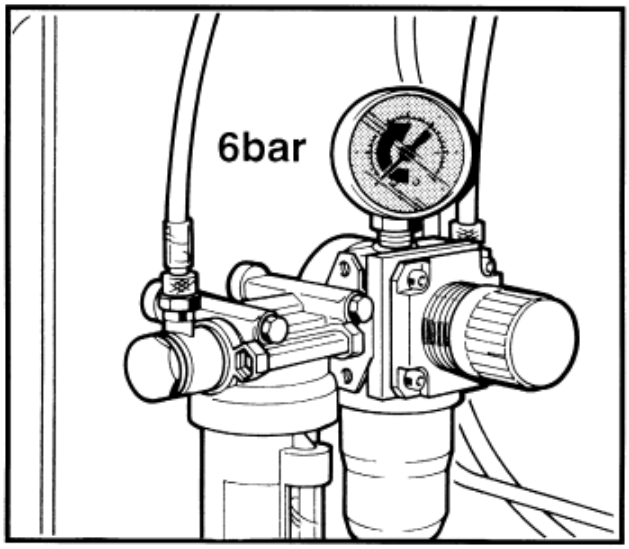

1. From the **GAS PANEL** page, open all below valves, until all pressure gauges indicate **"0",** (the compressed air pressure gauge on the FRL unit, must be set to the minimum value of **6 bar**).

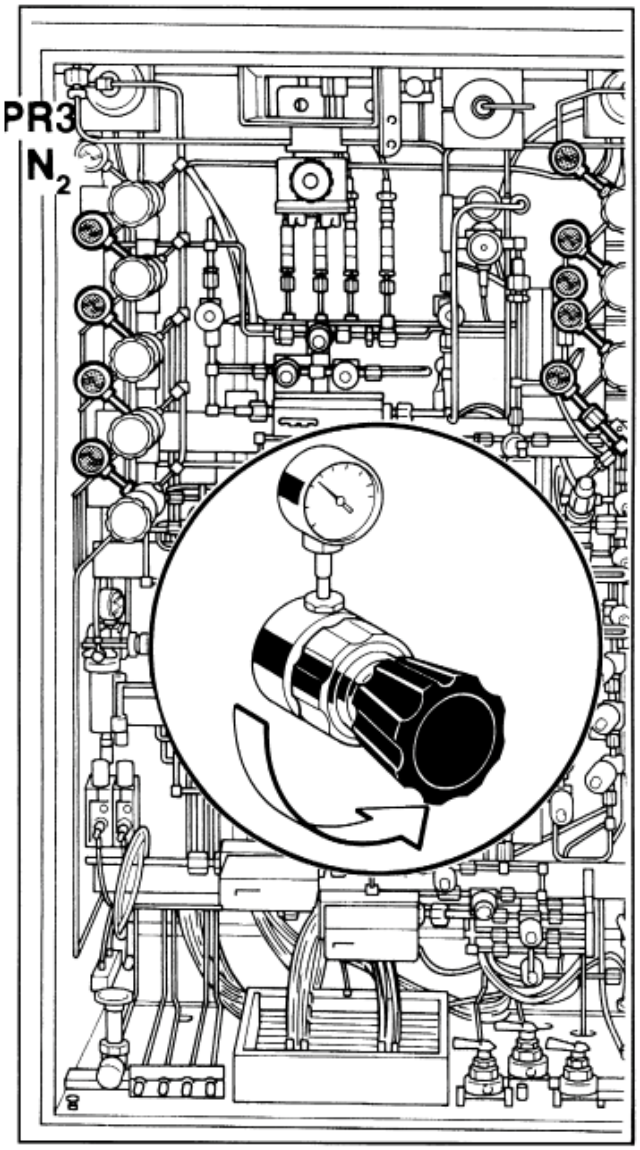

2. Turn the knobs of all the regulators (except **PR3-N2)** anti-clockwise.

3. Open the valves listed below in the order shown, and adjust the relevant regulators to the preset value indicated on the table

SETTING (general table)

OPENING SEQUENCE	GAS	VALVE	REGULATOR	SET VALUE
1.	HYDROGEN - main/purge	HV1	PR0-PR1	4 bar
2.	H2 dilute	HV1	PR4	2.5 bar
3.	DOPE N (PH3)	HV5	PR5-PR7	3 bar
4.	DOPE P (B2H6)	HV6	PR6	3 bar
5.	HCl	HV8	PR8 (if any)	3 bar

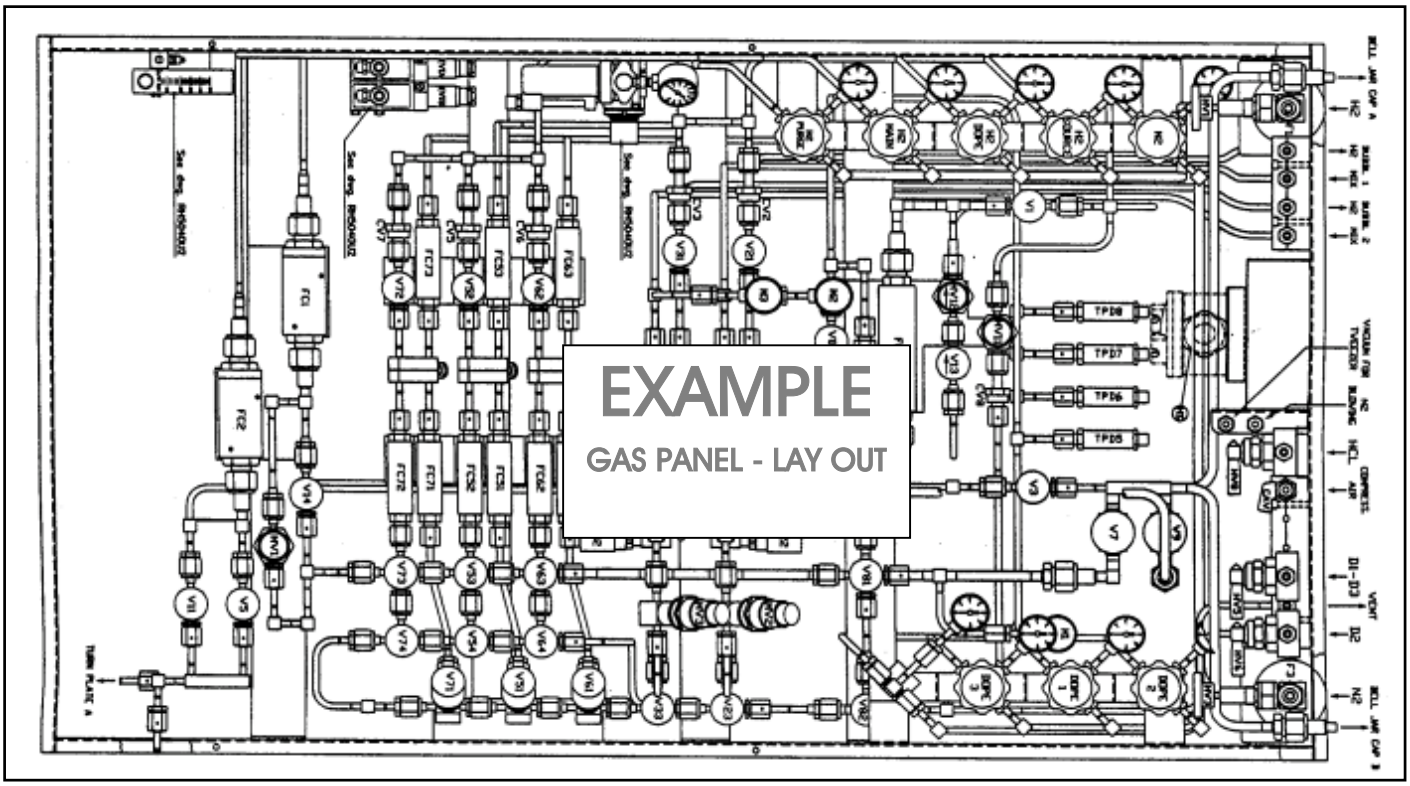

4. Using the detector on the gas panel, **PERFORM A GENERAL CONTROL**.

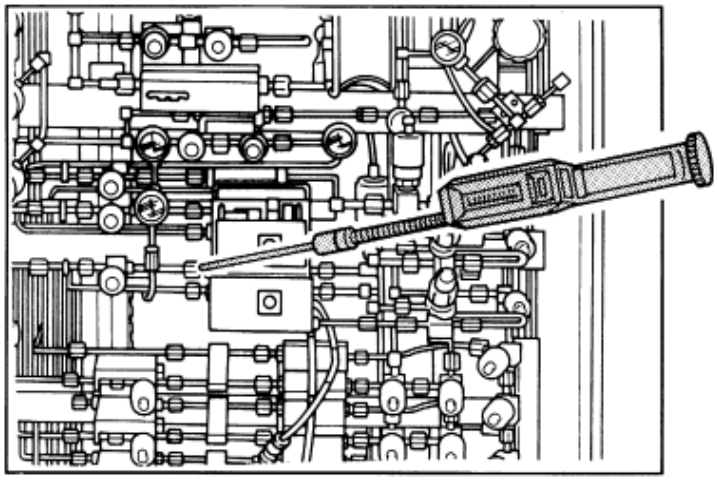

5. Open the by-pass on the BUBBLER **(VB4)** keeping the other valves **(VB1, VB2, VB3)** shut.

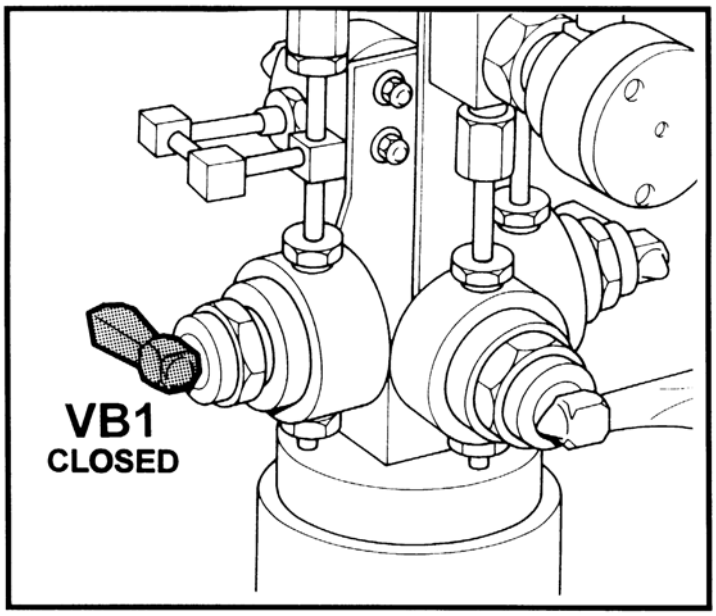

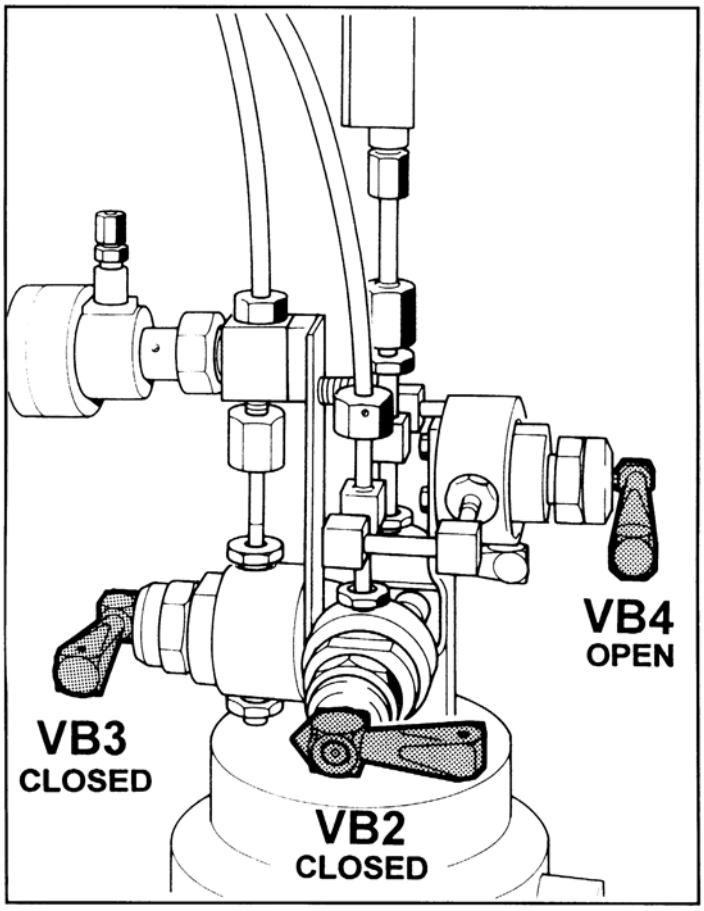

6. Adjust nitrogen flow into the **VENT** Lines, using valve **MV1,** and setting it to a starting value of **100.**

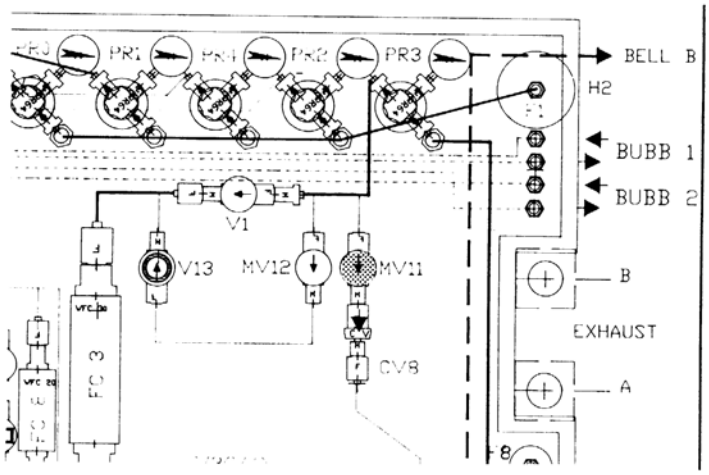

7. Check that all o-ring leak group manual valves are open.

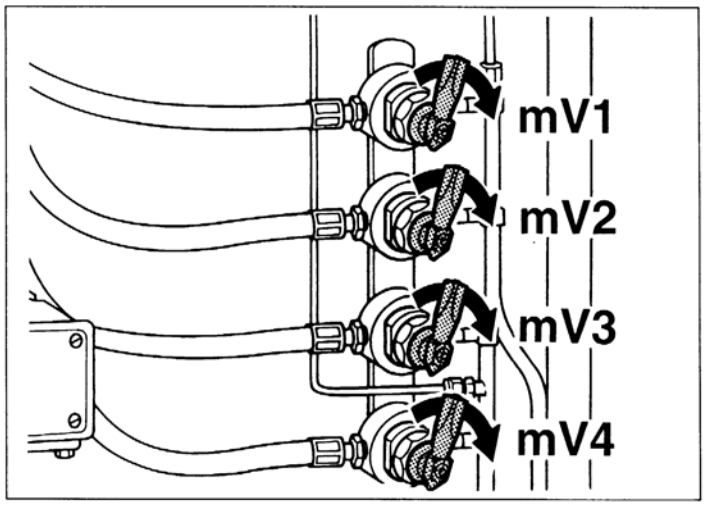

8. From the **GAS PANEL** page, open the hydrogen supply using the **H2A PURGE** command and set it at **200 liters**. Make sure that **200 lt** effectively pass through the **PURGE flowmeter** - this is visible at the **GAS PANEL** on the reading column.

9. Using the H2 LEAK detector, check for any at the following points:

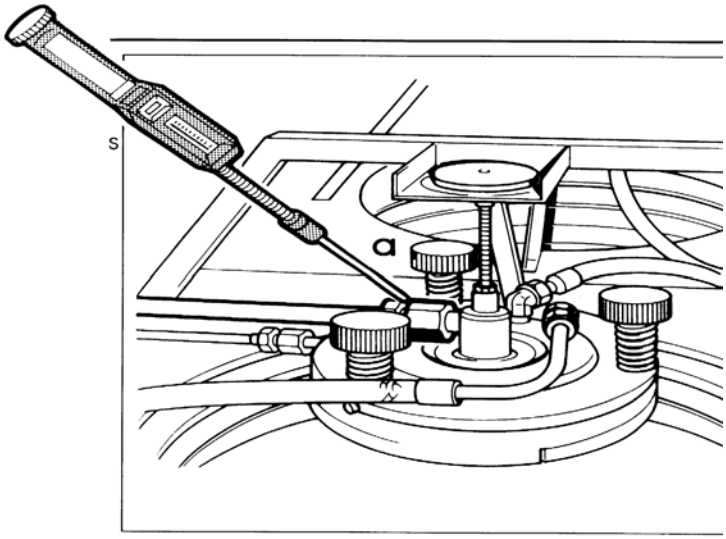

a. Bell-jar cap **VCR** union inlet.

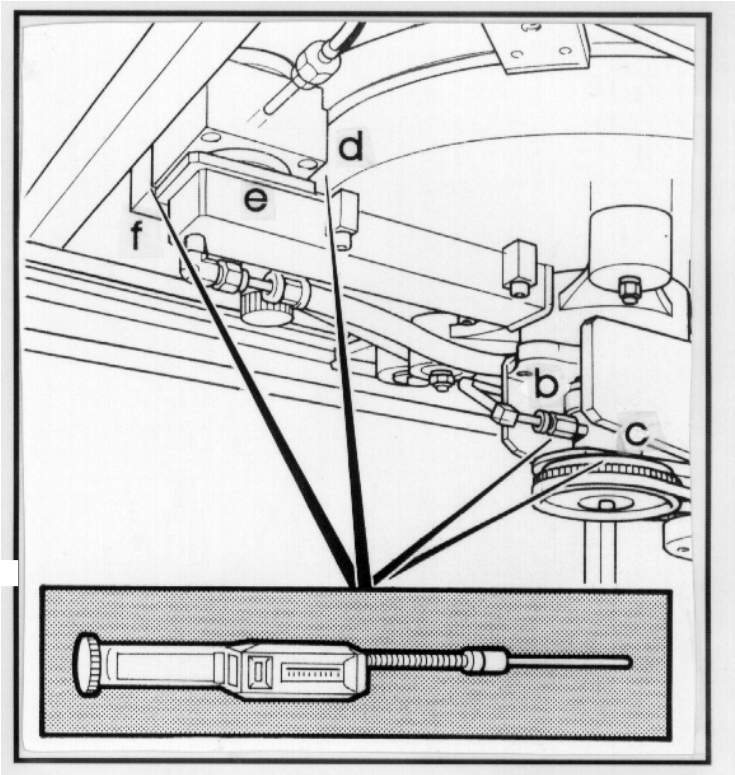

b. Rotation plate **VCR** union

c. Between pulley and rotation body.

d. Around the manifold.

e. Manifold valve seal (metal O-ring).

f. Discharge tube valve seal (metal O-ring).

g. Seal at outlet of customer lines discharge tube.

10. When you have finished the test, shut the **H2A PURGE** valve via valve **N2A.**

11. Repeat the same operation on the other **bell-jar (B).**

3. FLOWMETER TESTS

Test sequence (using GAS PANEL page)

- **3.1 N_2**
- **3.2 H_2 MAIN**
- **3.3 DOPE 1 / INJECT 1**
- **3.4 DILUTE 1**
- **3.5 HCl**
- **3.6 TCS/TET LINE(S)**

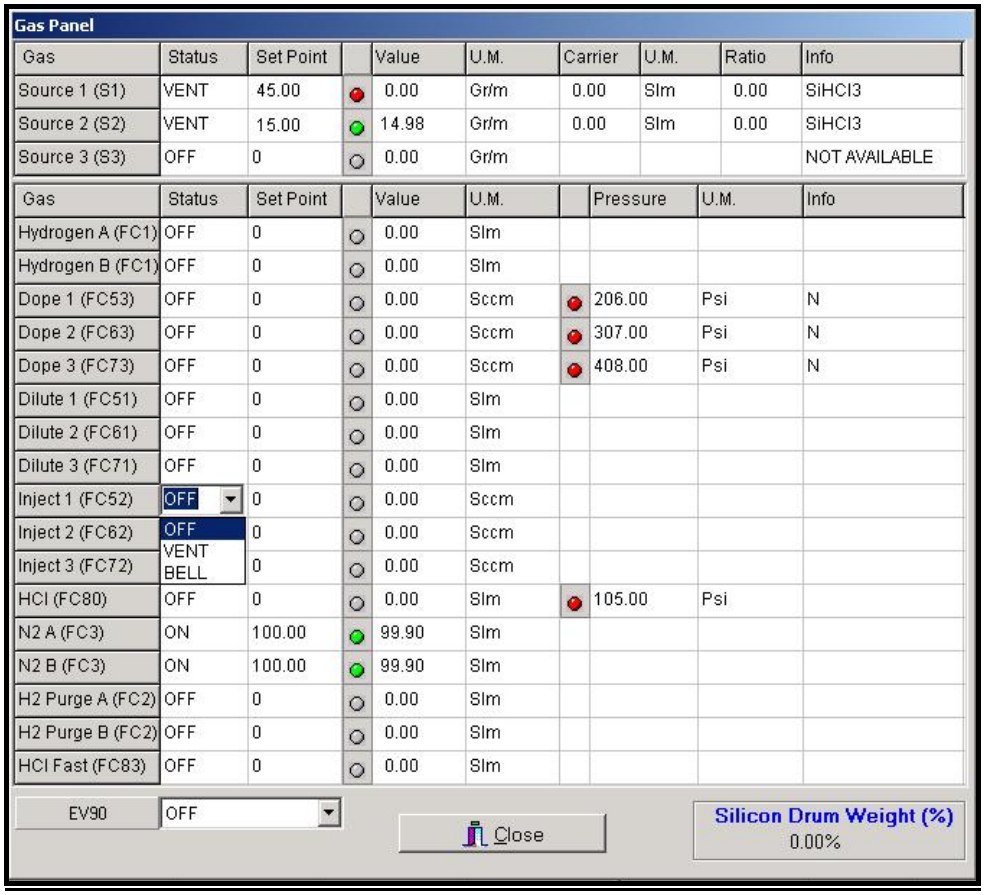

3.1 N_2 (FC3)

Using the **GAS PANEL** page, select **SET POINT N_2**, set different values and check effective reading value.

3.2 H_2 MAIN (FC1)

Using the cursor, select hydrogen **A (or B),** set different SET POINT values and check effective reading value. Close the line with hydrogen **A (or B).**

3.3 DOPE 1/INJECT 1 (FC53/52)

NOTE: TEST THIS FLOWMETER USING NOT POISONOUS GASES FROM SUPPLY PANEL BYPASS (CUSTOMER'S RESPONSIBILITY).

Select **INJECT 1 in VENT**.

NOTE: WHEN INJECT 1 OPENS IN VENT MODE, DOPE 1 ALSO OPENS.

Set different SET POINT values (but equal between INJECT and DOPE 1), and check effective reading value. Close using OFF selection.

3.4 DILUTE 1 (FC51)

Select flowmeter **DILUTE 1.**
Open using **ON option**.
Set different **SET POINT** values and check effective reading value.
Close using the **OFF option.**

NOTE: CHECK FOR LEAKAGE THE RELEVANT LINES & CONNECTORS.

3.5 HCl (FC80/CF83)

NOTE: TEST THIS FLOWMETER USING NOT POISONOUS GASES FROM SUPPLY PANEL BYPASS (CUSTOMER'S RESPONSIBILITY).

Select the **HCl** flowmeter in **VENT mode/BELL mode.**
Set different **SET POINT** values and check effective reading value.
Close using the **OFF option**.

NOTE: CHECK FOR LEAKAGE THE RELEVANT LINES & CONNECTORS.

3.6 TCS/TET LINE(S) (FC21/FC22)

Select the flowmeter in **VENT mode/BELL mode.**
Set different **SET POINT** values and check effective reading value.
Close using the **OFF option**.

Using a **LEAK DETECTOR**, check **VCR** tightness both on the **BUBBLER** and the **BUBBLER-to-SOURCE** connection.

Shut flow using the **SOURCE OFF** option.

For **DOPE 2/3,** repeat the preceding operations described in **3.3, 3.4** and **3.6**.

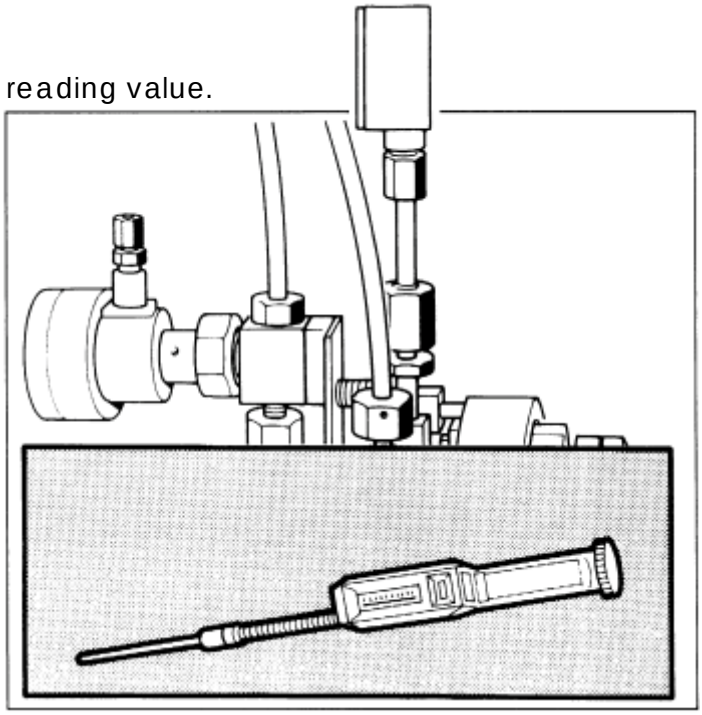

4. BUBBLER PURGING AND FILLING

- **Bubbler purging**

Check that the valves **VB3** and **VB4** are closed.

Open valve **VB1** and **VB2** in that order.

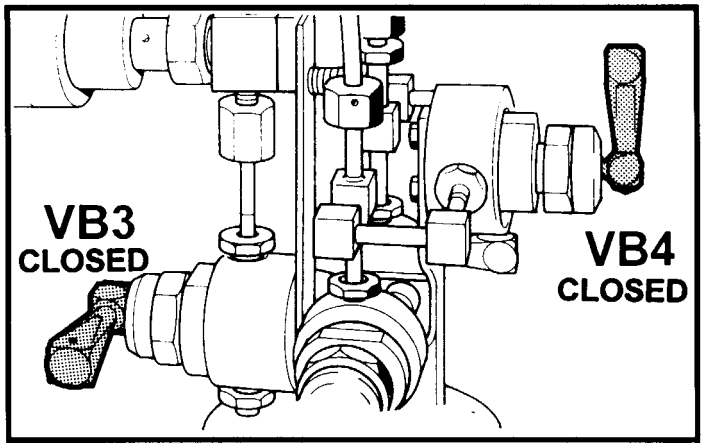

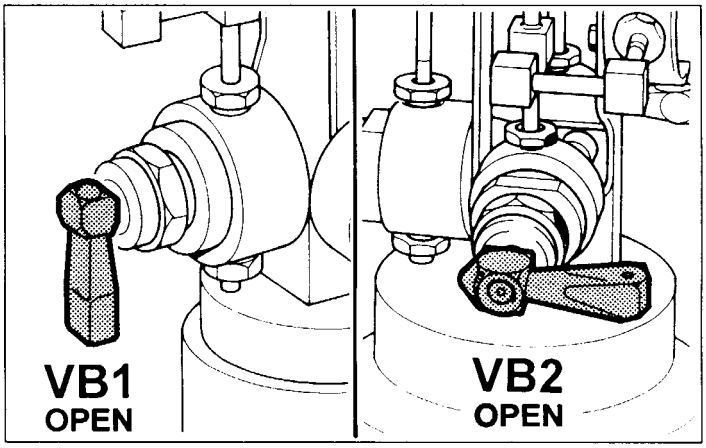

On the **GAS PANEL** page, select **SOURCE 1** in **VENT** mode and purge for about 30' using any set value. At the same time, make sure that the **RATIO** value increases and gradually reaches "0" (at this point, the **BUBBLER** is in hydrogen mode and is purged).

- **Bubbler filling.**

⚠ CAUTION

BEFORE DELIVERING LIQUID (BY OPENING VB3) TO THE BUBBLER LINE, CHECK LINE TIGHTNESS.

Shut VB1.

From the **GAS PANEL** page, select **SOURCE 1** in **VENT** mode, and check if the **M2** pressure gauge indicates "0".

Select SOURCE OFF.

Check that compressed air is reaching **VBBL** valve and open valve **VB3** - liquid now begins to enter the BUBBLER. Read pressure gauge **M2** and check if pressure is rising. When pressure is at **0.8 bar,** select **SOURCE in VENT** mode.

During this operation the **BUBBLER 1 LEVEL** led light can turn red.

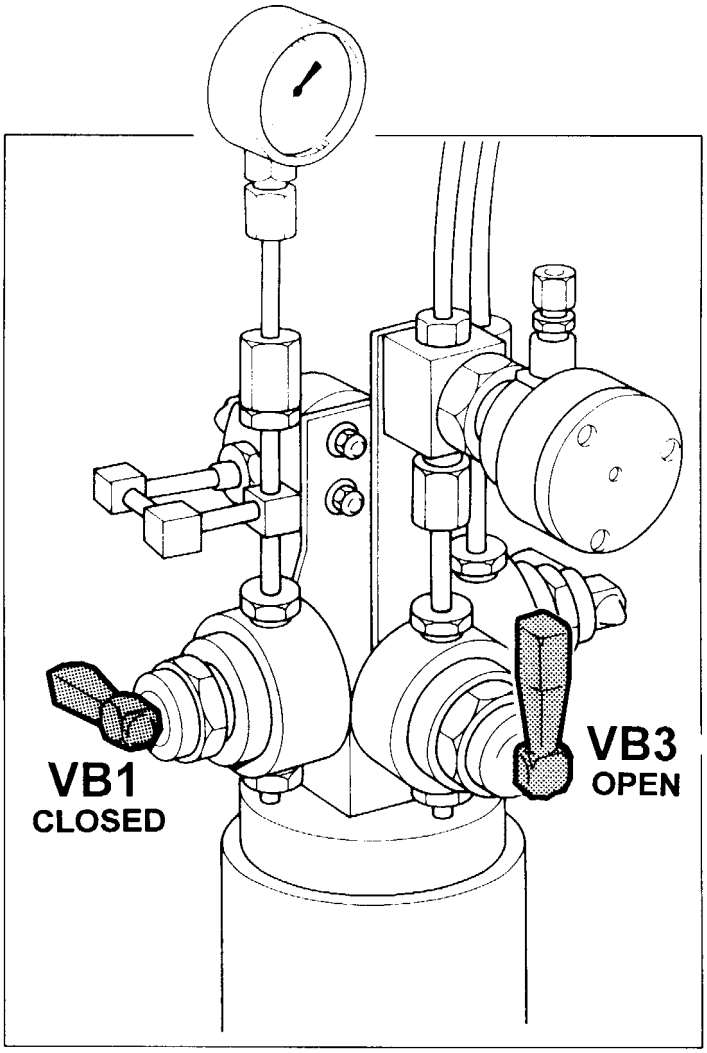

Check if compressed air at **VBBL is OFF** and that **M2** returns to **"0".**

Repeat these actions observing the **ALARM PAGE** until the **LED BUBBLER LEVEL** turns **GREEN.**

Open **VB1**, select **SX1** in **VENT** mode and purge silicon in VENT Mode for about **5÷10 minutes.**

After purging, select **SOURCE 1 OFF** and re-check the following: bubbler automatic filling, compressed air reaching **VBBL,** filling being executed by **SOURCE OFF** after about 1' - **BUBBLER 1 EMPTY** message disappears, **BUBBLER 1 LEVEL** message is activated and **VBBL** if **OFF.**

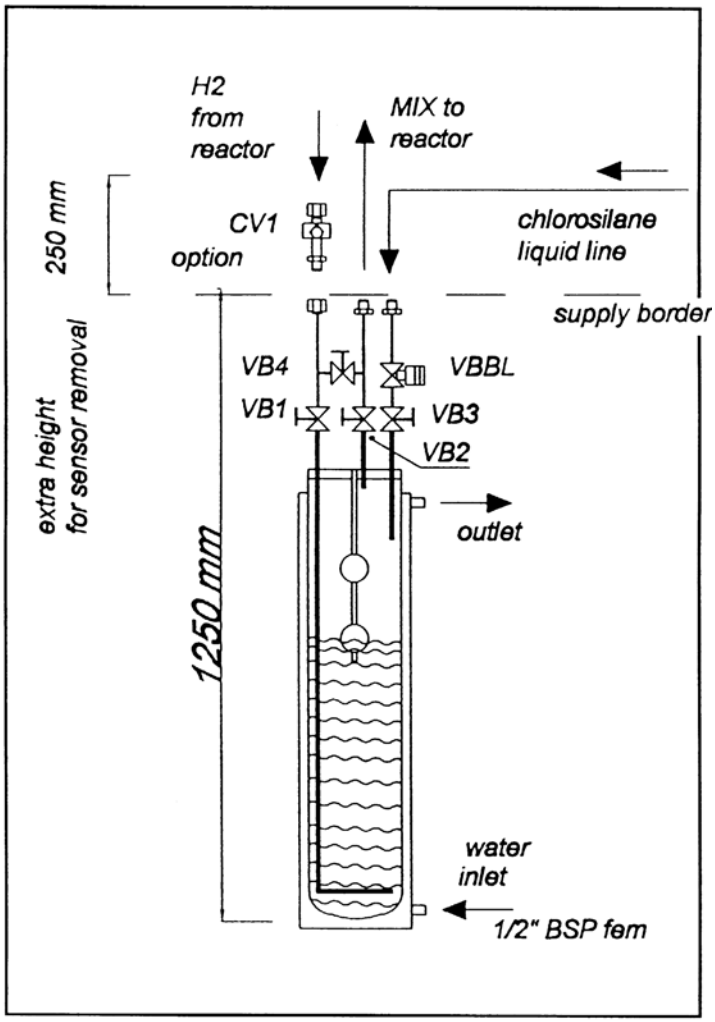

⚠ CAUTION

If "BUBBLER ALARM" appears during filling, shut valve VB3 immediately and check the problem.

For bubbler 2 filling, repeat the preceding operations, checking **SOURCE 2, M3** and **BUBBLER 2 EMPTY/LEVEL MESSAGE**.

5. DOPING LINES CONDITIONING (HCl and dopes)

These purge operations can be executed simultaneously.

1. Check that **PHOSPHINE** is present in the line.
2. Select **INJECT 1 in VENT** mode, attributing a maximum value both to **INJECT 1** and **DOPE 1** for about one hour.
3. Select **INJECT 1** and **DOPE 1 at OFF.**

- **HCl LINE CONDITIONING**

1. Check if **HCl** is present in the line (customer's responsibility).
2. Select **HCl in VENT** mode and purge for about **20'.**
3. Select **HCL at OFF**.

6. GENERATOR SETTING

Preliminary checks and generator start-up

6.1 WARNING

ONLY FOR PE2061

The following checks and start-ups has to be performed using the generator manuals positioned in its internal pocket.

1. Check the tightness of the screws of the coaxial and power cables.

2. Check the grounding connection.

3. Measure the supply voltage to the generator input terminals.

4. Make a jumper connection between terminals **1-2** on the terminal board X1 (see diagram XA).

5. Fill the cooling circuit tank with demineralized water.

6. Check that all the valves of the cooling water circuit are open.

7. Position the door safety selector (**EA-SA1**) in the **excluded** position.

8. Position the working selector (**PC-SA1**) in the **automatic** position.

9. Insert the automatic power factor correction unit by means of selector **EB-SA1** and position the controller **EB-A3** in the **automatic** position.

10. Switch on the generator using the lever of the main switch (**EA-QM1**).

11. Position the door safety selector in the **included** position and open a door so as to check that the generator switches off.

12. Position the door safety selector back in the **excluded** position.

13. Position the working selector in the **manual** position.

14. Check the magnetothermic switches **EC-QM1** and **EC-QM2** are switch on.

15. Switch the generator back on with the lever of the main switch.

16. Check that the pump **EC-M1** and the fan **EC-M2** are switch on and check that there is no water leakage in the circuit.

17. Check the correct direction of rotation of the pump by means of the pressure gauge **WD-M1**. If the measured value of the water pressure is between 2.7 and 2.9 Bar, the direction of rotation is correct; if the direction of rotation is not correct (low pressure value), swap over two of the three supply wires of the pump motor.

18. Check the correct direction of rotation of the fan which must correspond to the direction of the arrow (visual check). If the direction of rotation is not correct, swap over two of the three supply wires of the fan motor.

19. Press the reset button (**NB-SB1**) and check that the **water flow switch** alarm (displayed page 4 - alarms) is turned off.

20. From the keyboard (displayed page 1 - work), set **working place** 1 and 2 in order to check the transfer operation.

21. By selecting **working place 1** check that the transfer connects the coaxial cables from station A (visual check).

22. By selecting **working place 2** check that the transfer connects the coaxial cables from station B (visual check).

23. Read the value of **line voltage** (displayed page 12 - set up) and check that the value displayed on the video-keyboard is the same as the value measured in point 3.

If the voltages are different, change the **K LINE VOLTAGE** parameter (displayed page 7 - set up) so as to read the same values.

24. Check the generator configuration parameters (see generator manual). In particular, check that the **RUN TIME** value (displayed page 9 - set up) is 2.0 and the potentiometer **NBKT**s at 40%.

25. Position the potentiometer I Max mounted on card 585 at approximately halfway.

26. Check that the bells, quartzes and susceptors are mounted on the reactor.

27. Check that the reactor **main blower is switch on**.

28. Check that the reactor **cooling water circuit is open**.

29. In **manual mode run the apparatus only for few time**, in order to prevent any over heating of the reactor.

30. Select **working place 1** (station A).

31. On the generator, by means of the video-keyboard (displayed page 1 - work), set a power set-point equal to 10%.

32. Start up the generator (see generator manual) and check the values (displayed page 1 - work) of Vcc, Idc and **Hz** (the frequency must be between 3750 and 4250 Hz).

33. With a voltmeter, measure the values of **Icc** by means of the shunt positioned on the generator **HA-L2.**

At the ends of the shunt screws there must be a voltage of between 0 and 60 mV where 60mV corresponds to 450A.

E.g.: voltage measured at the ends of the shunt = 35 mV
calculated current = 262.5 A

Voltage measured **Max. current** **Max shunt value** **Real current**

Icc = (35*450)/60 = 262.5

If the values of Icc displayed on the video-keyboard differ from the measured values, it is necessary to change the **K current correction** (displayed page 6 - set up).

34. With a voltmeter, measure the values of **Vcc** on smoothing monophase reactance **HA-L2** of the generator**.**

If the values of Vcc displayed on the video-keyboard differ from the measured values, it is necessary to change the **Vin Nom Voltage** parameters (displayed page 7 - set up).

35. Take note of the value of resistance measured from the generator (displayed page 1 - work).

36. Stop the generator.

37. Set the resistance value equal to the one measured beforehand.

38. Select **working place 2** (station B).

39. Repeat points 28-29-30 switching on the generator on the other station.

40. Position the potentiometer I max mounted on card 585 at 100%.

41. Position the working selector in the **automatic** position.

41. Switch off the generator with the lever of the main switch. Remove the jumper from terminals **1-2** of the terminal board **X1** and connect the reactor emergency cable (**858**) to these terminals. Connect the serial cable to the reactor. Power up the generator again.

43. Close and look with the key all the doors.

44. Position the door safety selector in the **included** position**.**

45. Using the workstation, first on station A and then on B, run a process containing a power ramp from 20 to 70 kW to check the operation of the serial link.

46. After the first start-up check all the connections and the tightness of the screws of the MF circuit generator-coaxials, coaxials-capacitors, capacitors-inductors and profiling coils, so as to detect any over heating of the connections.

The tightness of the screws must then be repeated one month after the first start-up.

6.2 WARNING

ONLY FOR PE2061S

The following checks and start-ups has to be performed using the generator manuals positioned in its internal pocket.

1. Check the tightness of the screws of the coaxial and power cables.
2. Check the grounding connection.
3. Check the water cooling system.
4. Check the transformer connection and the generator parameters in accordance with the below table: (see "Generator wiring diagram" page EA).

HARDWARE

The table below describes how you must connect correctly the generators IFC-150 to the power mains for different voltages of operation,

Table of the connections to be performed on the transformer : EA-TM10, EA-TM102, EB-TM05 according to the power supply voltage

V_{line} (V)	Transformer Primary voltage
480 / 460	480
440	440
415	415
400	400

SOFTWARE

In the videokeyboard set the correct value as in following table

V_{live}	S 65 SetVolt	29 Line MIN V	30 Line MAX V	27 VacMINal	28 VacMAXal
	Pag. 24	Pag. 22 *(585.CF CARD SETUP)*		Pag. 13 *(450.D3 CARD SETUP)*	
480 [V]	*580*	*432*	*528*	*432*	*528*
460 [V]	*560*	*414*	*506*	*414*	*506*
440 [V]	*540*	*396*	*484*	*396*	*484*
415 [V]	*540*	*373*	*456*	*373*	*456*
400 [V]	***500***	***360***	***440***	***360***	***440***

In the videokeyboard set the correct value as in following table

Frequency [Hz]	I_02
	Pag. 19 *(585.CF CARD SETUP)*
50	*0*
60	*1*

5. Measure the supply voltage to the generator input terminals.

6. Make a jumper connection between terminals **5-6** (quick stop signal from reactor) on the terminal board X1 (see the "Generator Wiring Diagram" page XA).

7. Position the door safety selector (**EB-SA06**) in the **excluded** position.

8. Position the working selector (**LA-SA10**) in the **automatic** position.

9. Verify that the emergency push button cable from the reactor has been properly connected between socket **15-16.**

10. Switch on the generator using the lever of the main switch (**EA-QF04**).

11. Position the door safety selector in the **included** position and open a door so as to check that the generator switches off.

12. Position the door safety selector back in the **excluded** position.

13. Position the working selection selector in the **manual** position.

14. Check the magnetothermic switches **EA-QM01/03/05/07** are switch on.

15. Switch the generator back on with the lever of the main switch.

16. Check the correct rotation direction of the fans which must correspond to the arrows direction (visual check). If the direction of rotation is not correct, swap over two of the three supply wires of the main switch.

17. Press the reset button (**MA-SB07**) and check that the **water flow switch** alarm (displayed page 5 - alarms) is turned off.

18. Put the trimmer I nom of RA02.B card to 0% of the scale and set POWER SET (%) at 0.00.

19. From the keyboard (displayed page 1 - work), set **working place** 1 and 2 in order to check the operation of the two inverter.

20. Select **working place 1** and check that the coaxial cables are connected between the inverter 1and the station A (visual check - inverter running will show to blinking led **SO** and **RUN** placed on PC Boar RA02.B).

21. Select **working place 2** and check that the coaxial cables are connected between the inverter 1and the station B (visual check - inverter running will show to blinking led **SO** and **RUN** placed on PC Boar RA02.B).

22. Read the value of **line voltage** (displayed page 16 - card real data) and check that the value displayed on the video-keyboard is the same as the value measured in point 5.

If the voltages are different, change the **Vin@VacM** parameter (displayed page 12 - set up) so as to read the same values.

23. Check the generator configuration parameters (see the generator manual).

24. Check that the bells, quartzes and susceptors are mounted on the reactor.

25. Check that the reactor **main blower is switch on**.

26. Check that the reactor **cooling water circuit is open**.

27. In **manual mode run the apparatus only for few time**, in order to prevent any over heating of the reactor.

28. Run the apparatus and increase the trimmer I nom of RA02.B card till 50% checking that the real data are like the following:

$P \approx 10.7$	kW	$V_{MF} \approx 100$	V
$V_{CC} \approx 568$	V	$f_{MF} \approx 4556$	kHz
$I_{CC} \approx 19$	A	$R \approx 1.1$	Ω

Turn-off the apparatus and repeat the sequence twice, three times changing working place. At the end put the trimmer I nom of RA02.B card to 100% of the scale.

By the digital console the power reference can be set with the parameter POWER SET % and the working place by selecting 1 or 2.

The keys > and < allow run/stop of the frequency convert only from real data page and set data page.

29. With a voltmeter, measure the values of **Icc** by means of the shunts positioned on the generator **HC-RS03** for station **B** and **HB-RS03** for station **A**.

At the ends of the shunts screws there must be a voltage of between 0 and 60 mV where 60mV corresponds to 350A.

E.g.: voltage measured at the ends of the shunt = 35 mV

calculated current = 204.2 A

Voltage measured **Max. current** **Max shunt value** **Real current**

Icc = (35*350)/60 = 204.2

If the values of Icc displayed on the video-keyboard differ from the measured values, it is necessary to change the **Vin@IccM** parameters (displayed page 12 - set up).

30. Stop the generator.

31. Select **working place 2** (station B).

32. Repeat points 24-25 switching on the generator on the other station.

33. Position the working selector in the **automatic** position.

34. Switch off the generator with the lever of the main switch. Remove the jumper from terminals **5-6** of the terminal board **X1** and connect the reactor emergency cable (**3104-3106**) to these terminals. Connect the serial cable to the reactor. Power up the generator again.

35. Close and look with the key all the doors.

36. Position the working selector in the **automatic** position.

37. By means of the reactor GUI, from the **Diagnostic – Generator Test** window give the Start command to station A and then to station B, in order to check the operation of the serial link.

38. After the first start-up check all the connections and the tightness of the screws of the MF circuit generator-coaxials, coaxials-capacitors, capacitors-inductors and profiling coils, so as to detect any over heating of the connections.

The tightness of the screws must then be repeated one month after the first start-up.

7. TEMPERATURE SETTING

See the chapter "Temperature calibration".

8. SILICON WAFER LOADING/UNLOADING

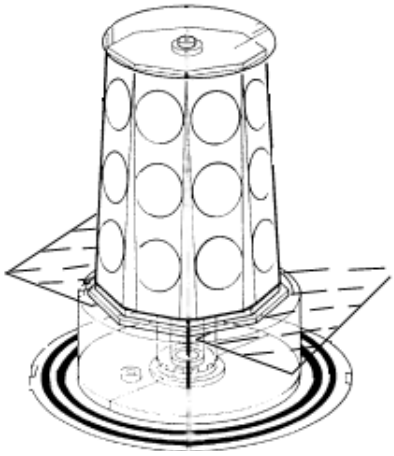

⚠ ATTENTION

During the silicon wafer loading/unloading operation, use the **quartz-guard**, a protection set to the shutter plate quartz safeguard

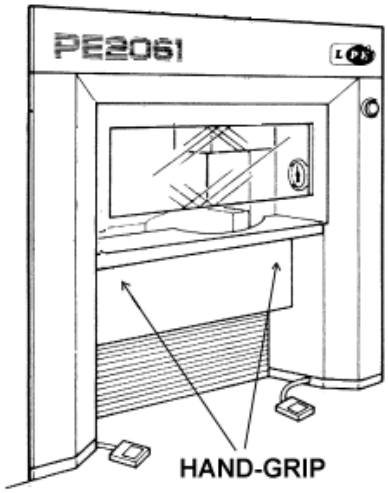

1. Open the Reactor Chamber

2. Advance the quartz-guard, using the hand-grip, under the front semi-table

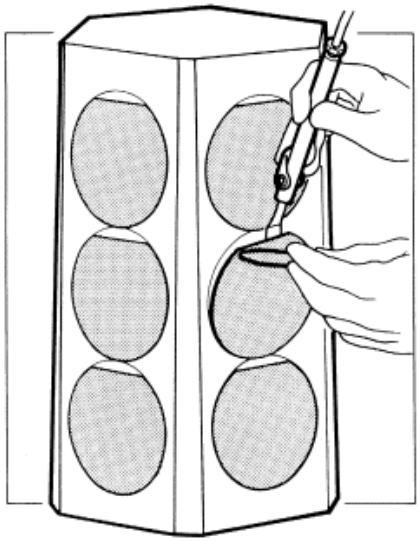

3. Load/unload the silicon wafer manually on the graphite support (susceptor)

4. Move back the quartz-guard

5. Close the Reactor Chamber

⚠ WARNING

If the quartz-guard is not backed, the shutter plate can not be closed, because the safety photocell to forbid the lift movement and the alarm led SAFETY SW LIFT A (or B) PORT is red

9. STARTING INITIAL PRODUCTION

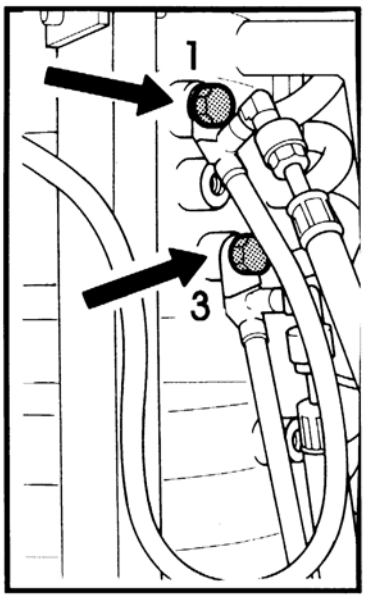

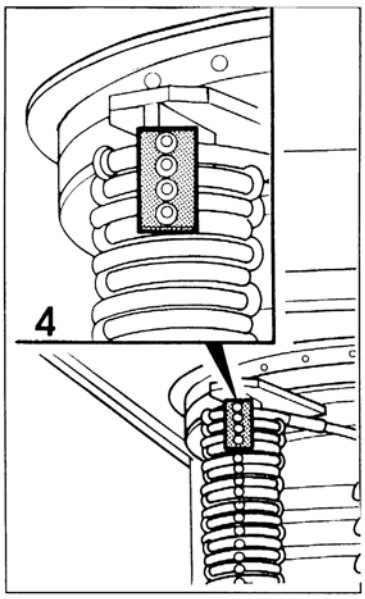

1. First check if inductance is connected to points 1 and 3 and to 4 short-circuiting points, then prepare a program according to the instructions in chapter 6 of the OPERATING MANUAL.

2. Remember that the process parameters to be input in the **TEMPERATURE, DOPING SILICON/1** program depend on the type of device to be produced.

3. Set the rotation start parameters on both chambers **(A and B)** at:

5g/60" clockwise and

5g/60" anti-clockwise

(consult OPERATING MANUAL chapter 6 on rotation parameters).

4. Set initial hydrogen flow value at **H2 M= 300.**

Execute a **SIMULATED PRODUCTION RUN** without wafers, according to the instructions in the **OPERATING MANUAL**, using the deposition program just set for both chambers.

Now carry out the initial production tests (attachment, intrinsic, test run, crystallographic characteristics).

On completion of these runs, proceed with susceptor **ATTACHMENTS** (ref. **OPERATING MANUAL 6.2.3),** then run the **INTRINSIC TEST** (ref. **OPERATING MANUAL 6.2.1**), **RUN TEST** and **CRYSTALLOGRAPHIC CHARACTERISTICS TEST.**

These tests will verify if all purge, line conditioning and quartz element washing operations were correctly executed.

INTRODUCTION

NOTE 1: The calibration procedure must be repeated following maintenance work on the bell-jar or any part of the optical system.
Every day, check if the readings taken with the manual and on-board machine pyrometers match.
Re-calibrate when values deviate by +/-1%. Take readings during the normal production process.

Reading made with external pyro must be done:

a) Through the window beneath or the window above the reactor pyro.

b) On the same wafer.

The PE 2061 epireactor has no dedicated temperature card.
The following basic conditions must be fulfilled:

- clean temperature sensor lens, using a soft lintfree wet cloth soaked in DI water.
- correctly focused lens
- correctly positioned temperature sensor

To check lens focusing:

- Lens focusing is factory set and should not be changed.

The standard distance between the red lens and the optical fiber is 10 mm, i.e. 28 mm between the end of the optical fiber (red lens side) and the threaded ring stopping the red lens holder.

Temperature calibration is factory set - please contact the LPE offices before taking any action.

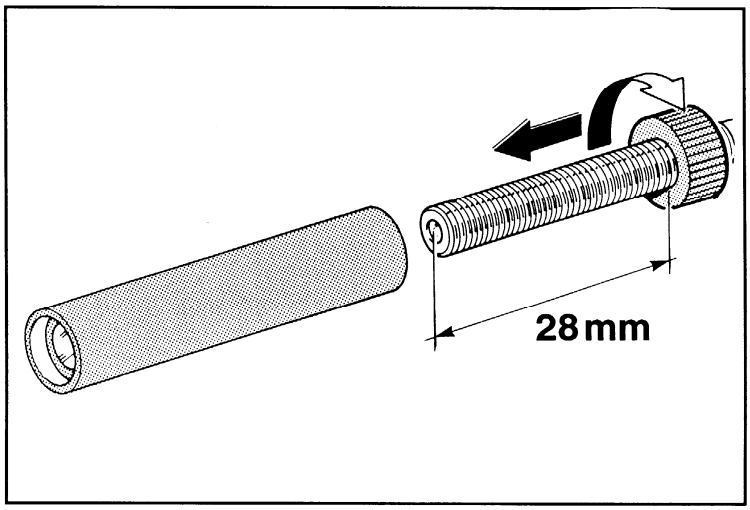

Modifying temperature calibration:

The following procedure must be completed for both bell-jars.

1. Edit a recipe containing the following lines:
- 1 Hydrogen set point as in process condition (300 lt)
- 2 Power from 20 KW to 80 KW , ramp time 9 min, stabilization time 10 min (2061)
- 2 Power from "PreH2 Power Stab value" to 80 KW, ramp time 1 min , stabilization time 10 min (2061S- The PreH2 Power Stab value is available into View → Reactor Configuration → Purge Parameters window)

2. Load dummy wafers on the susceptor - Note: not use Arsenic (As) and Boron (B).

3. Run the recipe.

4. When power reaches 80 Kw, put the process on HOLD for 5/6 min to enable temperature to stabilize.

5. Using the external pyrometer, read the temperature at the same point as the internal pyrometer reading. LPE recommend to use the IRCON or ULTIMAX pyrometer, with emissivity plan to 0.79 in peak mode

6. Adjust the pre-amp. card trimmer **(Y Group - pos. 4**) until the temperature displayed on the monitor is equal to that on the external pyrometer.

7. Stop the process by giving the abort command.

8. First temperature calibration

- Check that the susceptor is full load
- Not use Arsenic (As) or Boron (B) wafer
- Check that the temperature and power values of the first calibration, are as the following table

temperature	station A		station B	
Set point	Power	Real temp.	Power	Real temp.
800	35	800	35	800
850	40	850	40	850
900	46	900	46	900
950	57	950	57	950
1000	64	1000	64	1000
1050	72	1050	72	1050
1100	85	1100	85	1100
1150	97	1150	97	1150
1200	109	1200	109	1200
1250	113	1250	113	1250
1300	113	1300	113	1300
Pyrometer type	IRCON	\\	\\	\\
Emissivity set	0.79	\\	\\	\\

9. Edit recipe as follow:

```
1    Hydrogen                    300l
2    Power        20             80      Kw      Ramp time 8 min
3    ------------------------------------------< next step >-------------------------------
4    Temp  850          900              ramp 4 min    stab 99 min
5    ------------------------------------------< next step >-------------------------------
6    Temp  900          950              ramp  min     stab 99 min
7    ------------------------------------------< next step >-------------------------------
8    Temp  950          1000             ramp 4 min    stab 99 min
9    ------------------------------------------< next step >-------------------------------
10   Temp  1000         1050             ramp 4 min    stab 99 min
11   ------------------------------------------< next step >-------------------------------
12   Temp  1050         1100             ramp 4 min    stab 99 min
13   ------------------------------------------< next step >-------------------------------
14   Temp  1100         1150             ramp 4 min    stab 99 min
15   ------------------------------------------< next step >-------------------------------
16   Temp  1150         1200             ramp 4 min    stab 99 min
17   ------------------------------------------< next step >-------------------------------
18   Temp  1200         1250             ramp 4 min    stab 99 min
19   ------------------------------------------< next step >-------------------------------
```

Note : Step number 2 is valid for 2061, for 2061S as start power don't use 20 but the value of the parameter "PreH2 Power Stab value" (it is available into View → Reactor Configuration → Purge Parameters window)

Note : attain the temperature and power real values, select the jump command to go on the following step

Note : Do not exceed 1250 °C as set point for safety reasons.

10. Run the recipe.

11. For each temp set point:
- Let the temperature stabilize.
- Make a reading using an external pyro (refer to indications given in **NOTE 1).**
- Record the readings and the power displayed on the monitor.

Example:	Temperature set point	:	1100	1200
	Temperature displayed	:	1100	1200
	Real temp : (external pyrometer)		**1090**	**1205**
	Power displayed	:	**88**	**110**

- Jump step to proceed to next set point.

12. Once all readings are recorded abort the process.

13. Insert data in the proper table placed in the Temp calibration menu (MAIN MENU => DIAGNOSTIC => GENERATOR => TEMPERATURE CALIBRATION => STATION A/B, and increase 4KW of the note value, for every step.

Example:

set point theoretical	**previous calibration**	**real temp**	
800			
850			
900			
950			
1000			
1050			
1100	**92**		**1090**
1150			
1200	**114**	1198	**1205**
1250	**114**		
1300	**114**		1300

real temp at 1200 = (**1205 - 1200) + 1198**

value read

previous value set as real temp

92:(always set power displayed)

theoretical value

set required power at 1200°C 114Kw

NOTE 2: at 1300°C set always to the power of 1250°C

Repeat the same procedure wheter for station A or for station B.

NOTE 3:It is strongly suggested to insert theoretical temperature values (800-850 ecc.) in the temperature calibration table before proceeding..

TEMPERATURE PROFILE

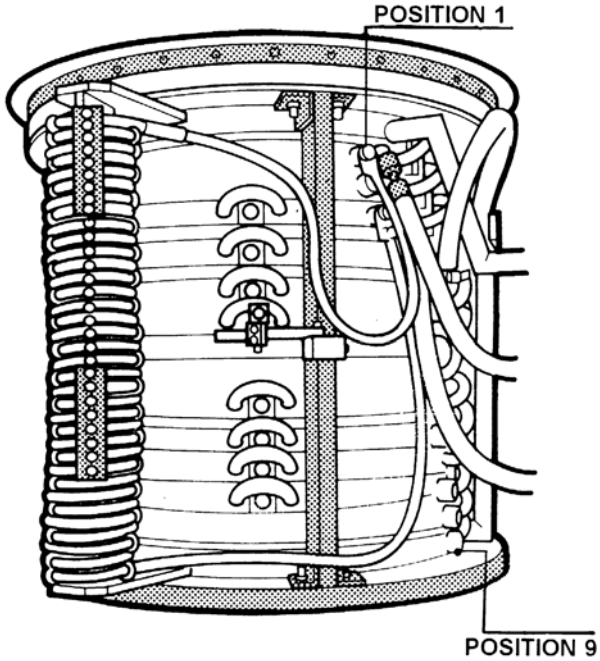

The temperature profile can be adjusted using a calibration inductance in order to achieve the desired resistivity profile for both dopants type.

There are 9 positions on the inductor where

a calibration inductance can be inserted to modify the susceptor temperature profile.

20 connection points, short circuited with respect to the inductance coils, are located on the calibration inductance.

WARNING

MOVE THE TERMINALS OF THE CALIBRATION INDUCTANCE WITH MAX. CAUTION.

Standard inductance connection as supplied:

insertion 1.3

Strapping 4

drawn from this point on as follows **(1.3 - 4),** would supply a sufficiently flat TEMPERATURE PROFILE.

Exceptions apart (to be agreed with LPE), the inductance should always be connected to the inductor starting from **position 1.**

Strapping of the points enables temperature profile to be finely tuned.

E.G.:

TYPE OF CONFIGURATION	BEHAVIOR
(1,3 - 8) →	Compared to the standard configuration **(1,3 - 4), cools** the susceptor head slightly with respect to the bottom by approx. 5-10°C
(1,3-0) →	Compared to the standard configuration **(1,3 - 4) ,warms** the susceptor head slightly with respect to the bottom by approx. 5-10°C

The connection **(1,X)** permits the more significant temperature profile variations.

E.G.:

TYPE OF CONFIGURATION	BEHAVIOR
(1,4 - 4) →	Compared to the standard configuration **(1,3 - 4), cools** the susceptor head with respect to the bottom by approx. 20°C
(1,2 - 4) →	Compared to the standard configuration **(1,3-4), warms** the susceptor head with respect to the bottom by approx. 20°C.

Note: NEVER CONNECT THE POINTS BEYOND 4 AND STRAPPING BEYOND 10 (unless otherwise agreed with LPE).

E.G.:

(1,5 - 4) → NO

(1,3 - 12) → NO

PROCESS STAR-UP

Note: before to begin the process stat-up, to ascertain that the purge of the gas lines is effected.

The first process is Susceptor etching and coating, etch for about 10 minutes then coat Susceptor with 15/20 micron coat.

Now proceed to next intrinsic layer process as follow:

1) load a column with n+ Antimony (Sb) wafer and on the opposite column place one n- wafer
2) if a four-point meter is available to measure resistivity, also load one p- wafer in column next to the n- wafer. Not use Arsenic (As) and Boron (B)
3) perform intrinsic program by a temperature setpoint of 1120°C, H_2 MAIN = 300 slm , SX = 32, time = 25 minutes deposit (about 45 micron)
4) measure thickness on n+ wafer, resistivity on p- wafer, and intrinsic level with spreading resistance on n- wafer
5) if intrinsic layer value is not correct, repeat at least once the above operations

PROCESS START-UP ACCORDING TO WAFER DIAMETER AND THICKNESS

When the above tests have been successfully performed, set reactor for first wafer production according to diameter and thickness.

Note: there are parameters that are common to all diameter on reactor start-up: hydrogen, profiling coil and pipe quartz height.

For variable reactor parameters see the following table:

START-UP IN ACCORDING TO WAFER DIAMETER WITH THICKNESS > 10 MICRON				
	4”	5”	6”	8”
Pipe quartz height	100	100	100	100
H_2 MAIN	300	300	300	300
Growth rate	1,3/1,5	1,3/1,5	1,3/1,5	1,3/1,5
Rotation	3	4	5	6
Rotation time	60”	60”	60”	60”
Quartz disk	20 mm	50 mm	30 mm	50 mm
Profiling coil	1/3	1/2	1/3	1/3
Baffle		4*4	4*6	
Lower baffle			4.4	

Note: minimum rotation 2 RPM – maximum rotation 10 RPM

RESISTIVITY TUNING

- **APPROX. INITIAL SETTING**

  N Type - PH3 - Bottle 30 PPM - H2M = 300 SLM

  or

  P Type - B2H6 - Bottle 100 PPM - H2M = 300 SLM

Resistivity (ohm*cm)	inject	dilute
2	**50**	**0.5**
10	**60**	**4.5**
50	**27**	**4.5**

Note: for resistivity <0.5 ohm*cm, dilute may be not used.

- **ADJUSTING OR CHANGING RESISTIVITY TARGET**

With dilution

$$\frac{INJ12*RES1}{DIL1} = \frac{INJ22*RES2}{DIL2}$$

Without dilution

INJ1*RES1 = INJ2*RES2

Where:

INJ1	=	Actual inject flow	**INJ2**	=	New inject flow
RES1	=	Actual resistivity	**RES2**	=	Resistivity target
DIL1	=	Actual dilution	**DIL2**	=	New dilution

The new inject flow is correct if the same dilution is used. If dilution is different the inject flow could be increased or decreased based on experimental results.

- **PPB FORMULA**

$$ppb = \frac{INJ2*PPM}{DIL*10*H2M}$$

Where:

PPB	=	Dopant concentration in parts per billion
INJ	=	Inject set point, expressed in cc. (1 slm = 1000 cc, 0.2 slm = 200 cc)
PPM	=	dopant bottle concentration
DIL	=	dilute set point, expressed in liters (1 slm = 1, 0.2 slm = 0.2)
H2M	=	Hydrogen Main flow, expressed in liters

With the use of a silicon calculator, PPB allows to determine corresponding resistivity value.

RESISTIVITY PROFILE TUNING

The correction method differs depending on whether **N** or **P** type epitaxial layer deposition is selected.

- **TYPE N (PH3) PHOSPHINE**

The typical calibration inductance configuration is **(1.3-0)**
N resistivity increases in proportion to **temperature increases and to growth speed increase**.

To adjust resistivity profile, to the desired value, modify the calibration inductance according to the following instructions:

E.G.:

R=Resistivity at corresponding level

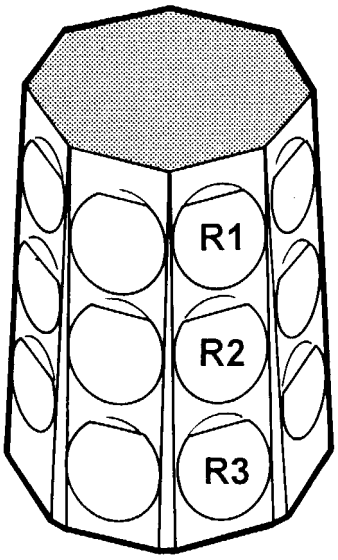

If R1>R3

Increase strapping (e.g. 1,3-0 → 1,3-4) — For small adjustments

Increase inductance connections (e,g. 1,3 → 1,4) — For substantial adjustments

If R1<R3

Reduce strapping (e.g. 1,3-4 → 1,3-0) — For small adjustments

Reduce inductance connections (e,g, 1,3 → 1,2) — For substantial adjustments

- **TYPE P (B2 H6) DIBORANE**

  The typical calibration inductance configuration is **(1.4-0)**

P resistivity decreases as temperature increases.

P resistivity increases, if growth speed increases

E.G.:

R=Resistivity at corresponding level

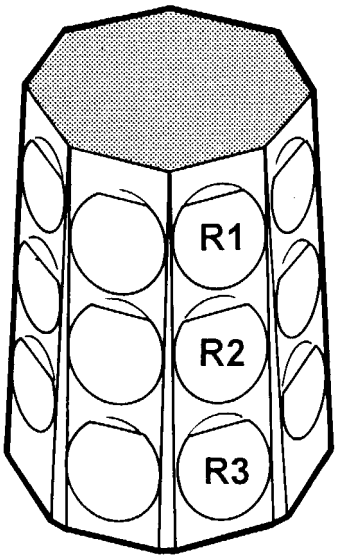

If R1>R3

Reduce strapping (e.g. 1,4-4 → 1,4-0) — For small adjustments

Reduce inductance (e,g. 1,3 → 1,2) — For substantial adjustments

If R1<R3

Increase strapping (e.g. 1,3-4 → 1,3-8) — For small adjustments

Increase inductance (e,g, 1,3 → 1,4) — For substantial adjustments

THICKNESS TUNING

3 parameters can be used to correct thickness uniformity.

- **H2 M (process hydrogen flow-rate in slm)**
- **SUSCEPTOR ROTATION SPEED**
- **GAS DELIVERY IN BELL-JAR TUBE HEIGHT**

- **H2 M**

T=Thickness at corresponding level, with respect to wafer center.

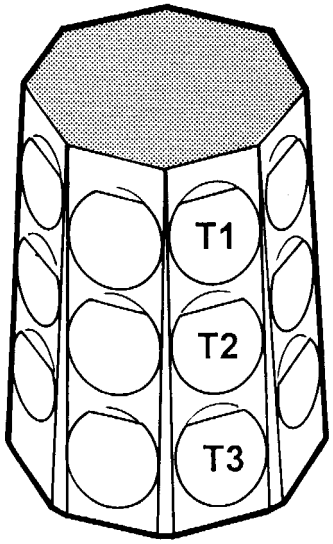

E.G.: start based on results obtained with standard condition.

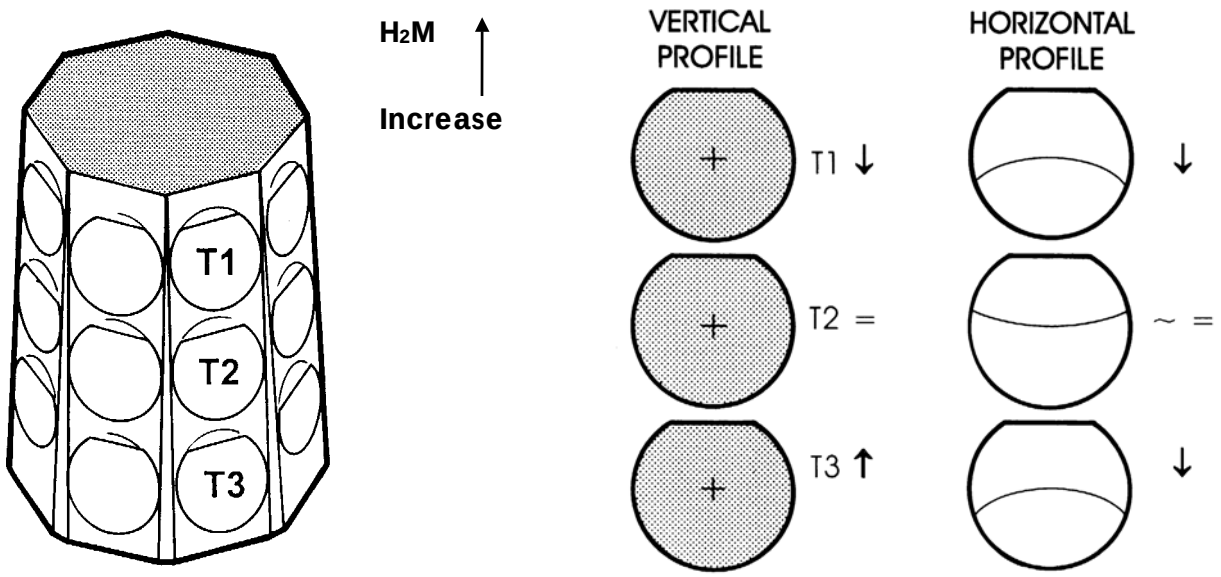

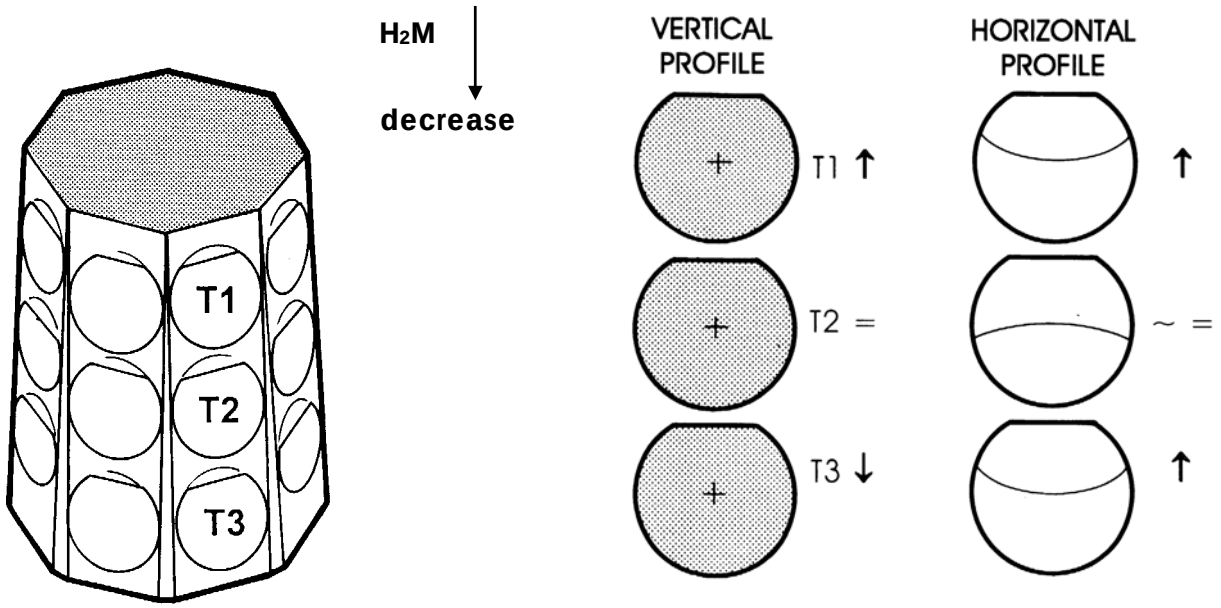

- **ROTATION**

1. Rotation speed increase ⟶

(left/right increase approx. 3% every 1 RPM increase)

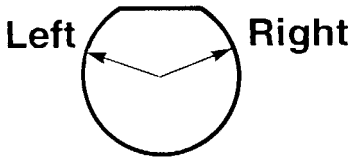

---

2. Clockwise rotation speed increase

or ⟶

clockwise rotation time increase

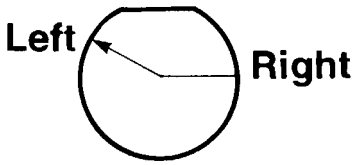

---

3. Counter clockwise rotation speed increase

or ⟶

counter clockwise rotation time increase

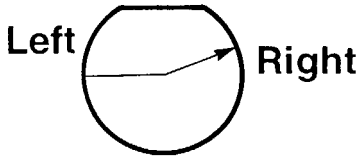

ROTATION TIME BELOW 50” OR EXCEEDING 70” IS NOT RECOMMENDED.

- **GAS DELIVERY IN BELL-JAR TUBE HEIGHT**

NOTE: Typical values for **"L"** are in the range **80 to 110 mm**

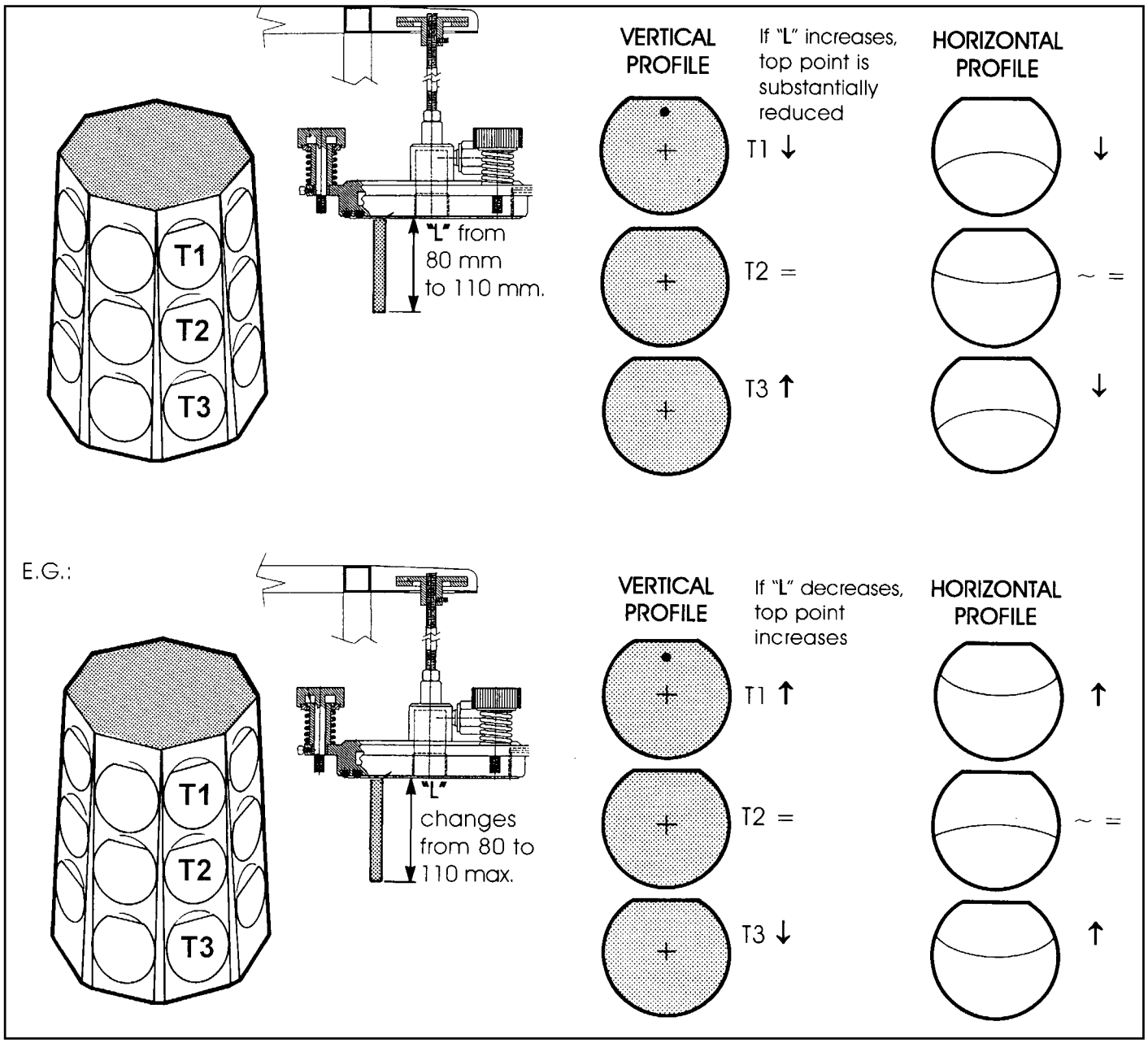

NOTE: If you wish to modify the vertical profile slightly, increase or reduce **H_2 M.**

SHUT-DOWNS

The reactor may need different shut-down methods according to current requirements.

A. LIMITED PERIOD SHUT-DOWN.
(FOR A FEW HOURS OR DAYS)

B. MEDIUM PERIOD SHUT-DOWN.
(1 OR 2 WEEKS)

C. DEFINITIVE SHUT-DOWN FOR DISASSEMBLY OR TRANSFER.

D. SHUT-DOWN DUE TO ACTIVATION OF EMERGENCY STOP BUTTON.

- **Reactor**
- **Power generator**

A. Limited period shut-down.

A1. Isolation from electric power sources _____

1 -START REACTOR SWITCH-OFF PROCEDURE

a - To ensure efficiency, both bell-jars must be closed and nitrogen purging must be completed.

b - The reactor shutdown command switches the reactor off in the correct way.

c - Select the reactor shutdown command from the management menu.

d - The operator could now reduce the nitrogen flow through the MV12 valve.

2 -Work station shutdown procedure

⚠ CAUTION

It is mandatory to switch off the work station following the enclosed shutdown procedure. A power fail or a not proper shutdown may damage the file system.

a - Select **management** option from main menu.
To access the management both bell jars must be:
- in free status.
- open consent.

b - Select reactor **shutdown** command. The reactor will be switched off.

c - Select work station shutdown.

d - At the end of this command the workstation is ready to be switched off.

3 - Using the master switch**,** CUT POWER to the converter and fit the padlock.

4 - Cut power to the master switch to the reactor and fit the padlock.

⚠ CAUTION

5 - During maintenance work, the keys must be kept by the department head or by the person carrying out maintenance, until work has finished.

6 - Place "**maintenance in progress**" signs both on reactor and converter, if maintenance work requiring the reactor at "0" power level has to carried out.

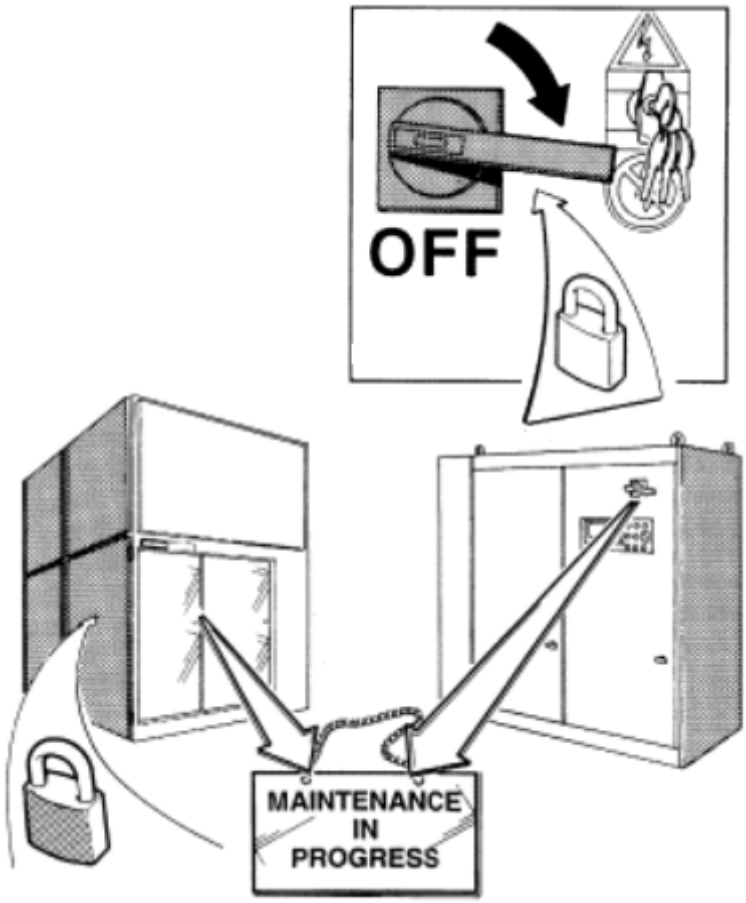

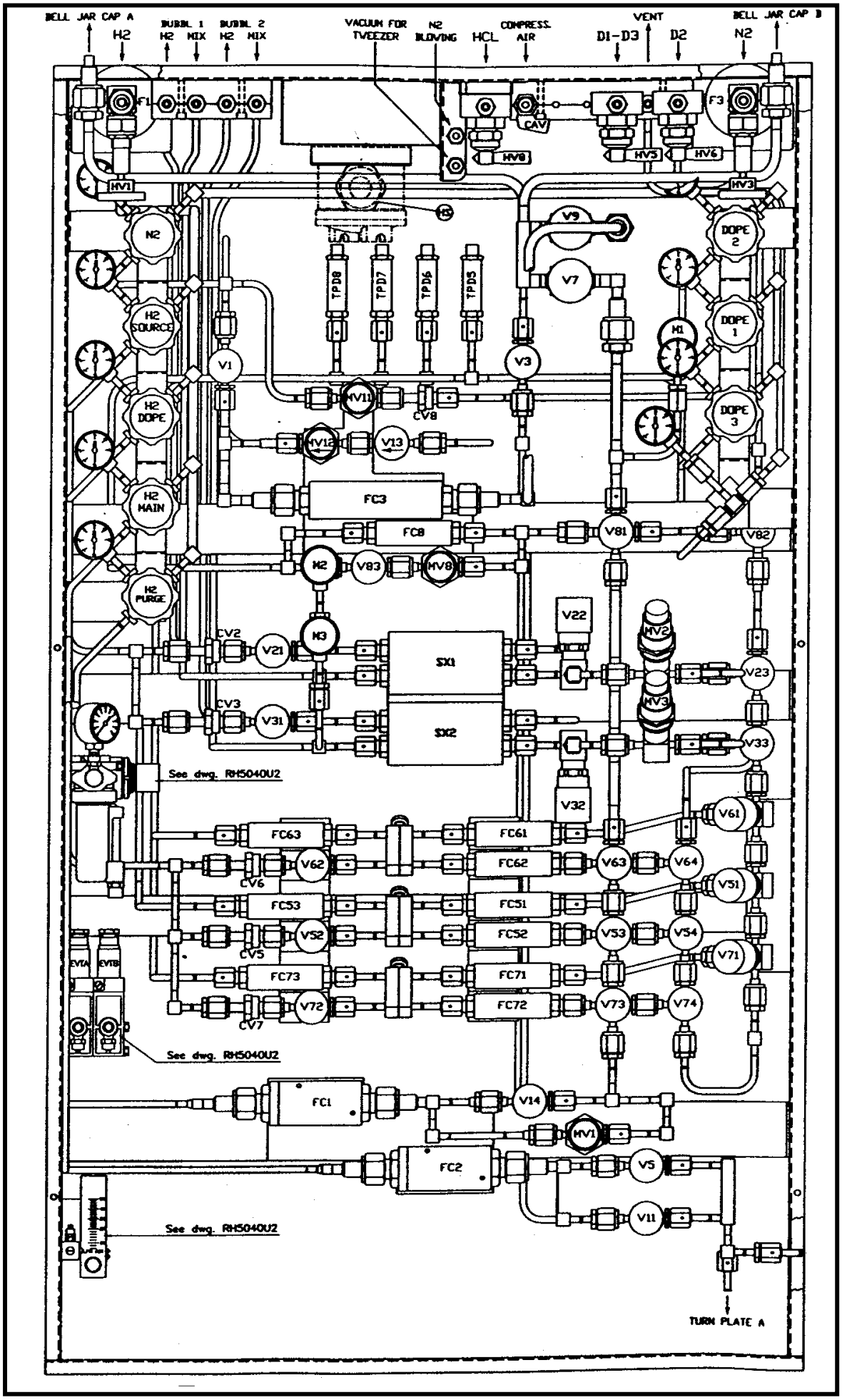
BELL JAR CAP A
H2
BUBBL 1
H2 MIX
BUBBL 2
H2 MIX
VACUUM FOR TWEEZER
N2 BLOWING
HCL
COMPRESS. AIR
D1-D3
VENT
D2
BELL JAR CAP B
N2
F1
F3
CAV
HV8
HV5
HV6
HV1
HV3
HC
V9
N2
DOPE 2
TPD8
TPD7
TPD6
TPD5
V7
H2 SOURCE
DOPE 1
M1
V1
V3
HV11
CV8
H2 DOPE
DOPE 3
HV12
V13
FC3
H2 MAIN
FC8
V81
V82
M2
V83
HV8
H2 PURGE
V22
HV2
CV2
M3
V21
SX1
V23
HV3
CV3
V31
SX2
V33
See dwg. RH5040U2
V32
V61
FC63
FC61
V62
FC62
V63
V64
CV6
V51
FC53
FC51
V52
FC52
V53
V54
CV5
V71
EVTA
EVTB
FC73
FC71
V72
FC72
V73
V74
CV7
See dwg. RH5040U2
FC1
V14
HV1
FC2
V5
V11
See dwg. RH5040U2
TURN PLATE A

B. Medium period shut-down

B1. Purge the following harmful gas lines while reactor and power generator are active: hydrochloric acid, Silicon, Doping substances as described below.

- **LINE TO REACTOR PURGING**

Shut valves **V21, V23, V31 and V33** in case a second bubbler is installed), using the **GAS PANEL TEST page.**

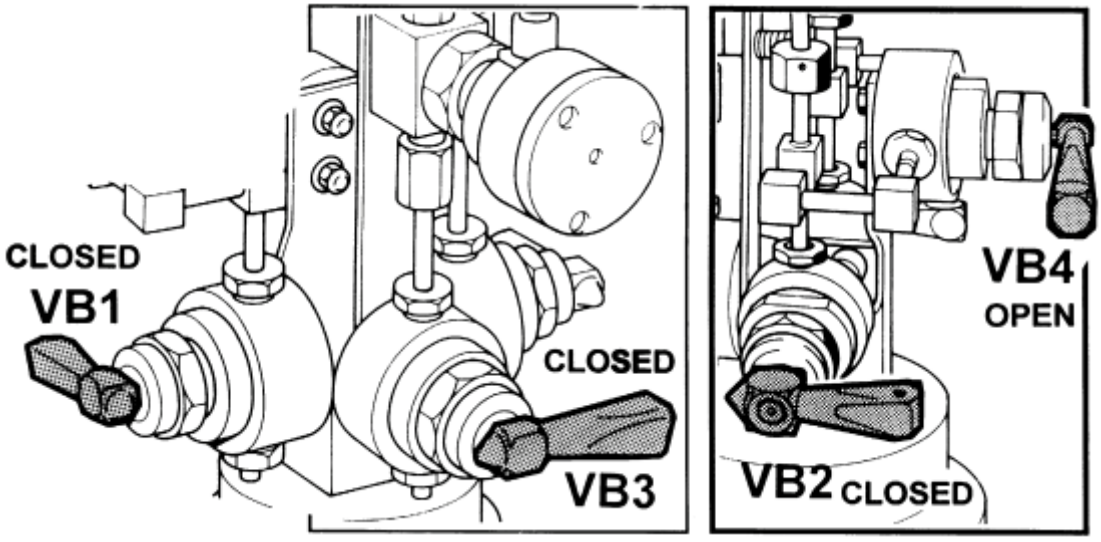

Shut manual valves **VB1, VB2** and **VB3** on the bubbler and open valve **VB4** (do this on the second bubbler too if present). Allow to purge for at least 20'.

- **PURGING HCl and DOPING substances**

In this case, the customer should purge the **HCl, PH3** and **B2H6** lines (customer's responsibility).

B2. Using the **GAS PANEL TEST** page, open valves **V51, V52** and **V54** and, similarly, valves **V41, V42** and **V44** for 20 minutes.

B3. For hydrochloric acid, open valve **V82** for at least 20'.

B4. Using the **GAS PANEL TEST** page, shut all manual valves (**HV1, HV2, HV5, HV8**) except **NITROGEN** valve **HV3** which should be allowed to purge at the values mentioned in the menu.

B5. Isolation from water power source

Shut the on/off valves at the delivery and outlet ports.

NOTE: To discharge residual pressure, use the drain valve installed by the customer.

B6. Isolation from pneumatic/process gas power sources. _____

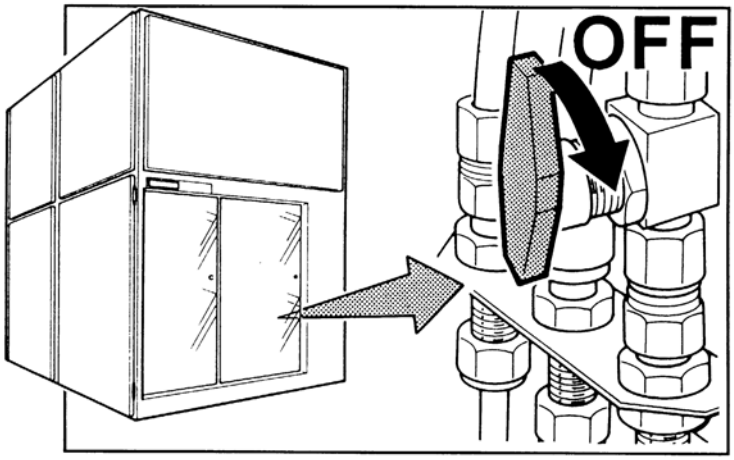

PNEUMATIC

1. Shut the line on/off valve.

2. Shut pressure from the circuit using the knob on the FR+L unit.

PROCESS GAS

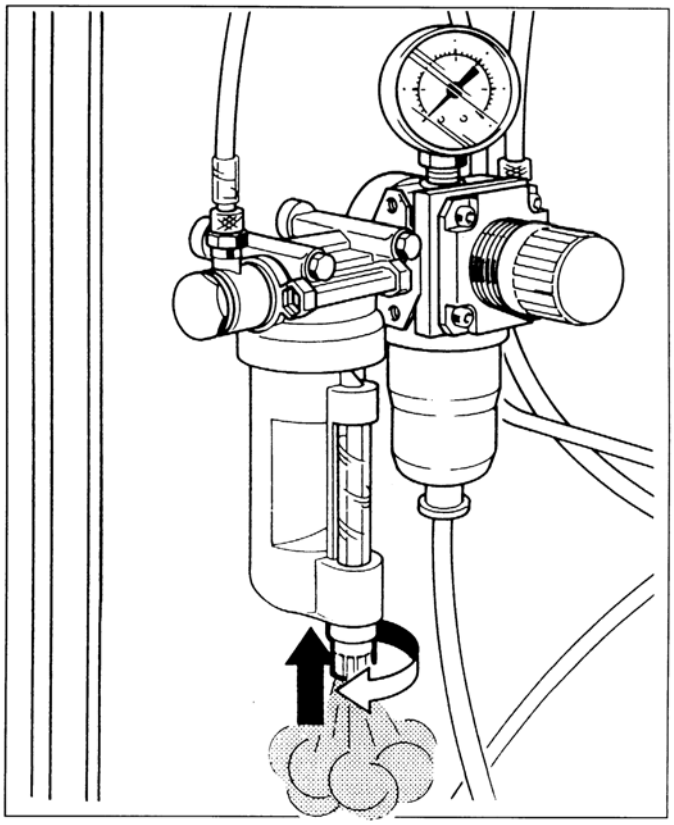

⚠ CAUTION

BEFORE ATTEMPTING ANY JOB ON THE GAS METERING UNIT, CAREFULLY OBSERVE THE INSTRUCTIONS AND PROCEDURES INDICATED IN THE "MAINTENANCE" CHAPTER.

1. Shut the on/off valves on the gas metering unit, in case of gas leaks from the panel (emergency state) or if doing maintenance work.

⚠ CAUTION

IN CASE OF PROLONGED DOWN-TIME, CONSULT THE "STOPS" CHAPTER TO EXECUTE THE CORRECT STOP AND RESTART PROCEDURE.

B7. Isolation from electric power sources _____

1. START REACTOR SWITCH-OFF PROCEDURE

   a. To ensure efficiency, both bell-jars must be closed and nitrogen purging must be completed.

   b. The reactor shutdown command switches the reactor off in the correct way.

   c. Select the reactor shutdown command from the management menu.

   d. The operator could now reduce the nitrogen flow through the **MV12** valve.

2 - Work station shutdown procedure

⚠ CAUTION

It is mandatory to switch off the work station following the enclosed shutdown procedure. A power fail or a not proper shutdown may damage the file system.

a - Select **management** option from main menu.
To access the management both bell jars must be:
- in free status
- open consent.

b - Select reactor **shutdown** command. The reactor will be switched off.
c - Select work station shutdown.
d - At the end of this command the workstation is ready to be switched off.

3- Using the master switch**,** CUT POWER to the converter and fit the padlock.

4- Cut power to the master switch to the reactor and fit the padlock.

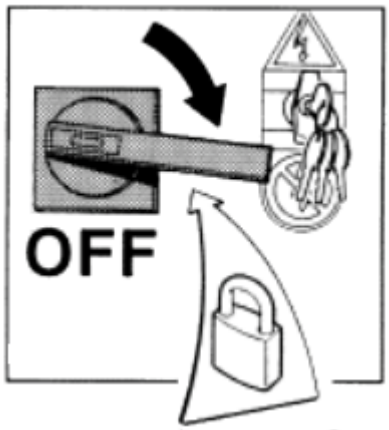

⚠ CAUTION

5 - During maintenance work, the keys must be kept by the department head or by the person carrying out maintenance, until work has finished.

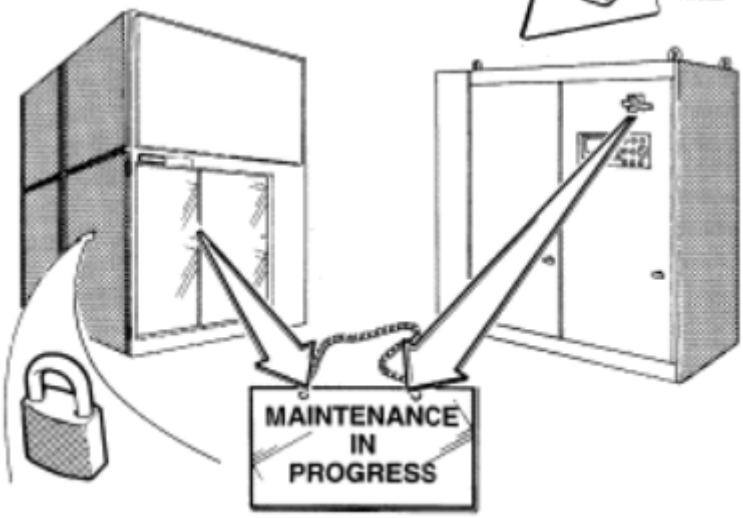

6- Place "**maintenance in progress**" signs both on reactor and converter, if maintenance work requiring the reactor at "0" power level has to carried out.

C. Definitive shut-down for disassembly or transfer.

C1. Purge the following harmful gas lines while reactor and power generator are active: hydrochloric acid, silicon, doping substances as described in paragraph B.

C2. Disconnect hydrogen, doping substances and hydrochloric acid inlets. Connect the inlets to inert gas (**N_2**) and purge for at least one hour, using the purging method previously employed.

C3. Empty the bubbler/s as follows:

1. Pressurize the bubbler at **2 bar** using valves **VB1** and **VB3,** and keeping valves **VB4** and **VB2** shut.

2. Open pneumatic valve **PV1,** connecting it to a compressed air line and use the valves of the CHLOROSILANE tank as necessary.

3. Allow to flow for about **2 hours** to purge liquid chlorosilane from the delivery line.

4. Open manual valve **VB2** on the bubbler and shut valve **VB3**. Using the command for valves **V21 or V23** (**31 or 33** for second bubbler) on the GAS PANEL TEST page, allow inert gas to flow at the maximum permissible gas flow rate from **SOURCE** for **12 to 24 hours.**

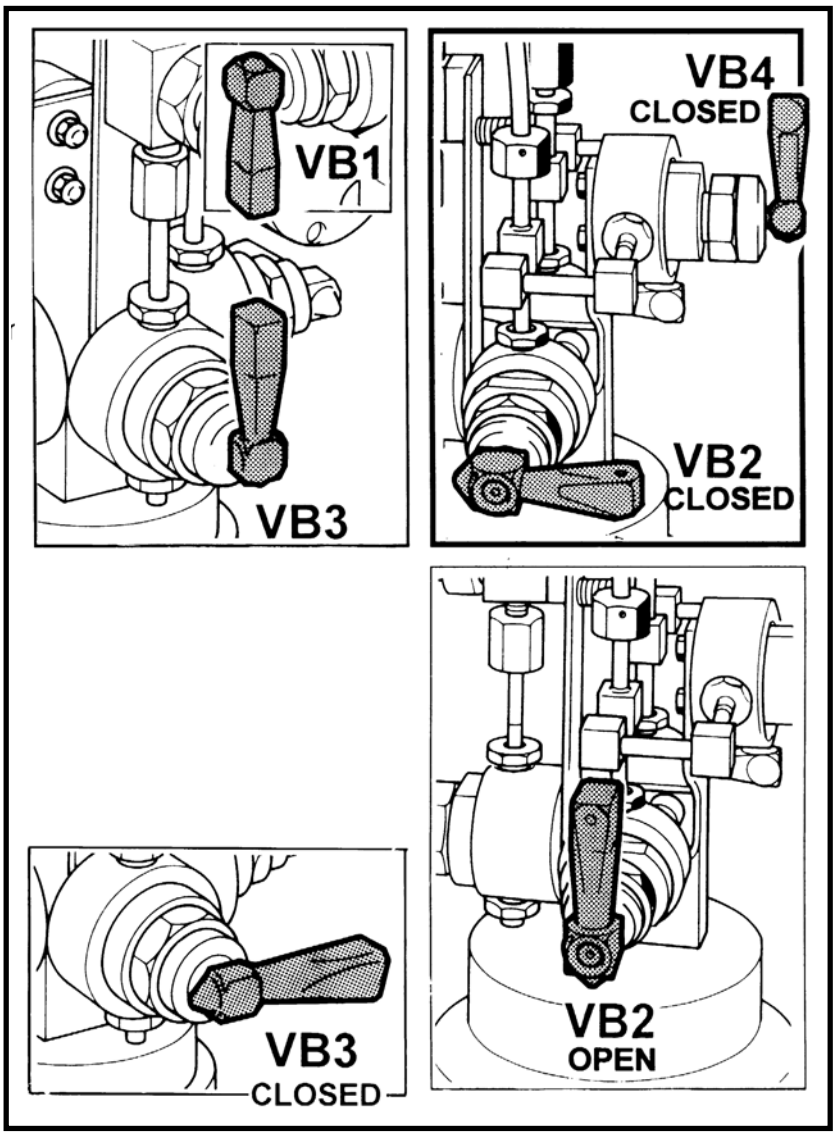

⚠ CAUTION

USE ANTI-ACID MASKS FOR THE NEXT JOB TO PROTECT AGAINST POSSIBLE FUMES.

5. When the bubbler has been emptied, shut valves **VB1, VB2, VB3**, and **VB4,** disconnecting and shutting the unions of the bubbler/s.

C4. Shut water circuit inlet and outlet both on the generator and reactor and drain water from internal circuits using the appropriate drain valves.

C5. Using the valve on the customer's line, shut out compressed air and disconnect the line.

C6. Isolation from electric power sources

1. START REACTOR SWITCH-OFF PROCEDURE

a. To ensure efficiency, both bell-jars must be closed and nitrogen purging must be completed.

b. The reactor shutdown command switches the reactor off in the correct way.

c. Select the reactor shutdown command from the management menu.

d. The operator could now reduce the nitrogen flow through the **MV12** valve.

2 - Work station shutdown procedure

⚠ CAUTION

It is mandatory to switch off the work station following the enclosed shutdown procedure. A power fail or a not proper shutdown may damage the file system.

a - Select **management** option from main menu.
To access the management both bell jars must be:
- in free status
- open consent.

b - Select reactor **shutdown** command. The reactor will be switched off.
c - Select work station shutdown.
d - At the end of this command the workstation is ready to be switched off.

3. Using the master switch, CUT POWER to the converter and fit the padlock.

4. Cut power to the master switch to the reactor and fit the padlock.

⚠ CAUTION

5 - During maintenance work, the keys must be kept by the department head or by the person carrying out maintenance, until work has finished.

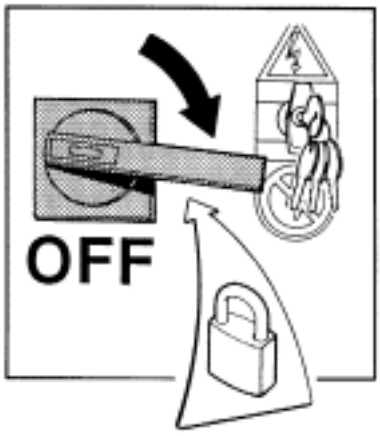

6 - Place "**maintenance in progress**" signs both on reactor and converter, if maintenance work requiring the reactor at "0" power level has to carried out.

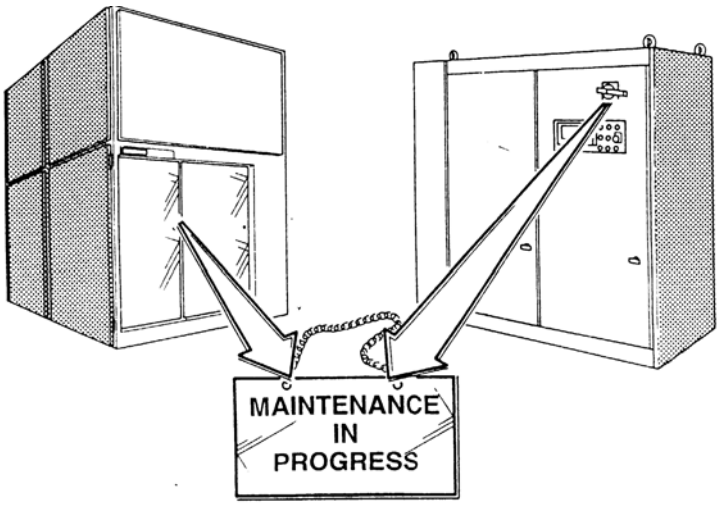

C7. Using the upline switches, cut out the power supply lines, and disconnect these lines at the reactor and generator connection points.

For reactor and generator disassembly operations, refer to instructions in the chapters:
"TRANSPORT AND INSTALLATION, "SAFETY INSTRUCTIONS", "MAINTENANCE", and "DISASSEMBLY".

D. Shut-down by pressing the emergency stop button.

If the emergency-stop button is pressed the following situations would occur in the reactor and power generator.

Reactor Emergency Power Off:
Effects of activating the Reactor Emergency Power Off button:

1 - All power in the reactor and generator is turned OFF.
2 - Nitrogen purge begins (through a normally open valve).
3 - Induction coils are no longer energized.
4 - Reactor cooling air shut off.
5 - Cooling water is maintained.

After the Reactor Emergency Power Off button has been activated, the reactor has to be restarted manually - this may damage epi wafers and reactor.

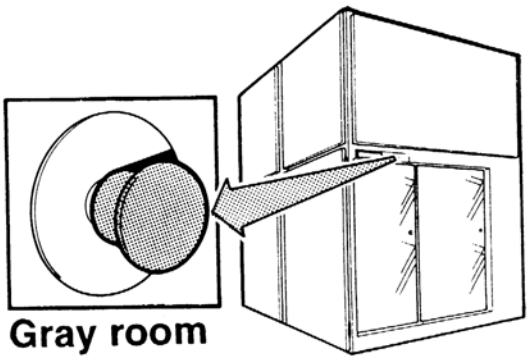

Generator Emergency Power Off:
Effects of activating the Generator Emergency Power Off button:

1 – Generator main breaker open.
2 - Induction coils are no longer energized.
3 - Reactor power is maintained.
4 - Reactor alarm level H is usually triggered.
5 - Cooling air is maintained.
6 - Cooling water is maintained.

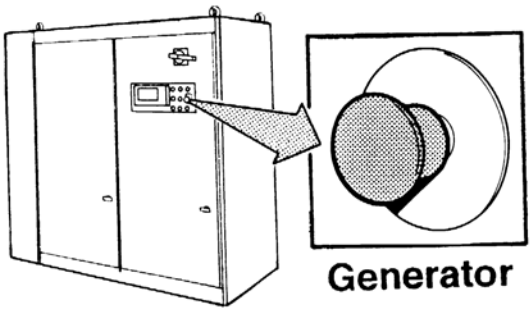

START-UP

A. Start-up after limited period shut-down
B. Start-up after a medium period shut-down
C. Start-up after emergency stop button was pressed.

A. Start-up after limited period shut-down

1. Remove the padlock and power up the reactor using the main switch **"0"** and the key on the electronic rack.

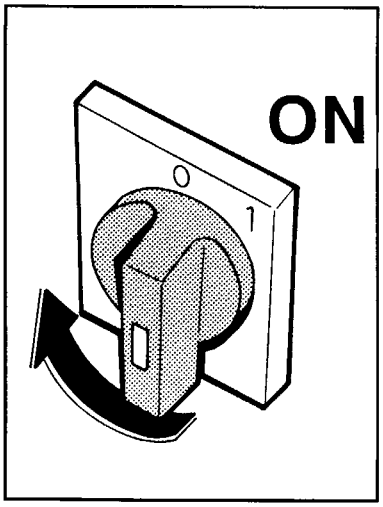

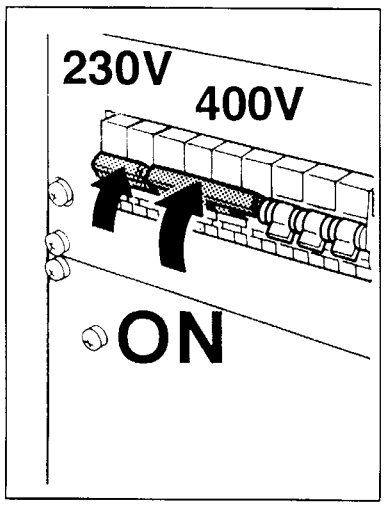

2. Power up by using the switch in the electronic cabinet (**400V** and **230V**), close the access doors to the electrical cabinet and remove the key.

Remove the padlock and power up.

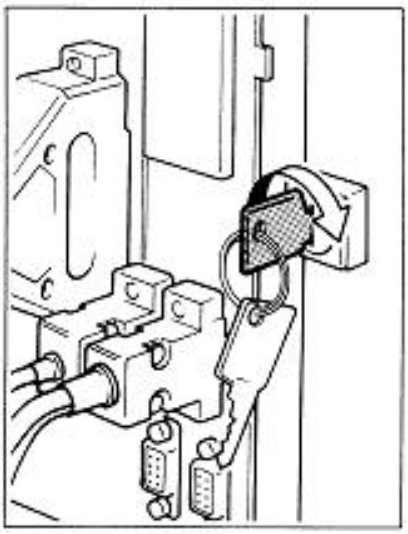

3. Remove the padlock and power up the generator using the master switch**.**

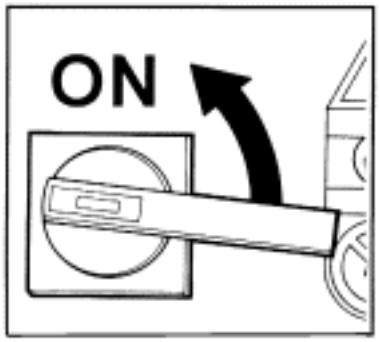

⚠ CAUTION

THE ELECTRONIC RACK AND POWER GENERATOR KEYS MUST BE KEPT BY THE HEAD OF DEPARTMENT.

4. Power up the work station using the on-board switch.

5. Type ***"LPE"*** when prompted to input the ***"USER NAME".***

6. Type password ***"LPE".***

7. Using the mouse, quickly click twice over the ***"PE2061"*** logo into the desktop..

8. Wait few seconds until the main screen appears.

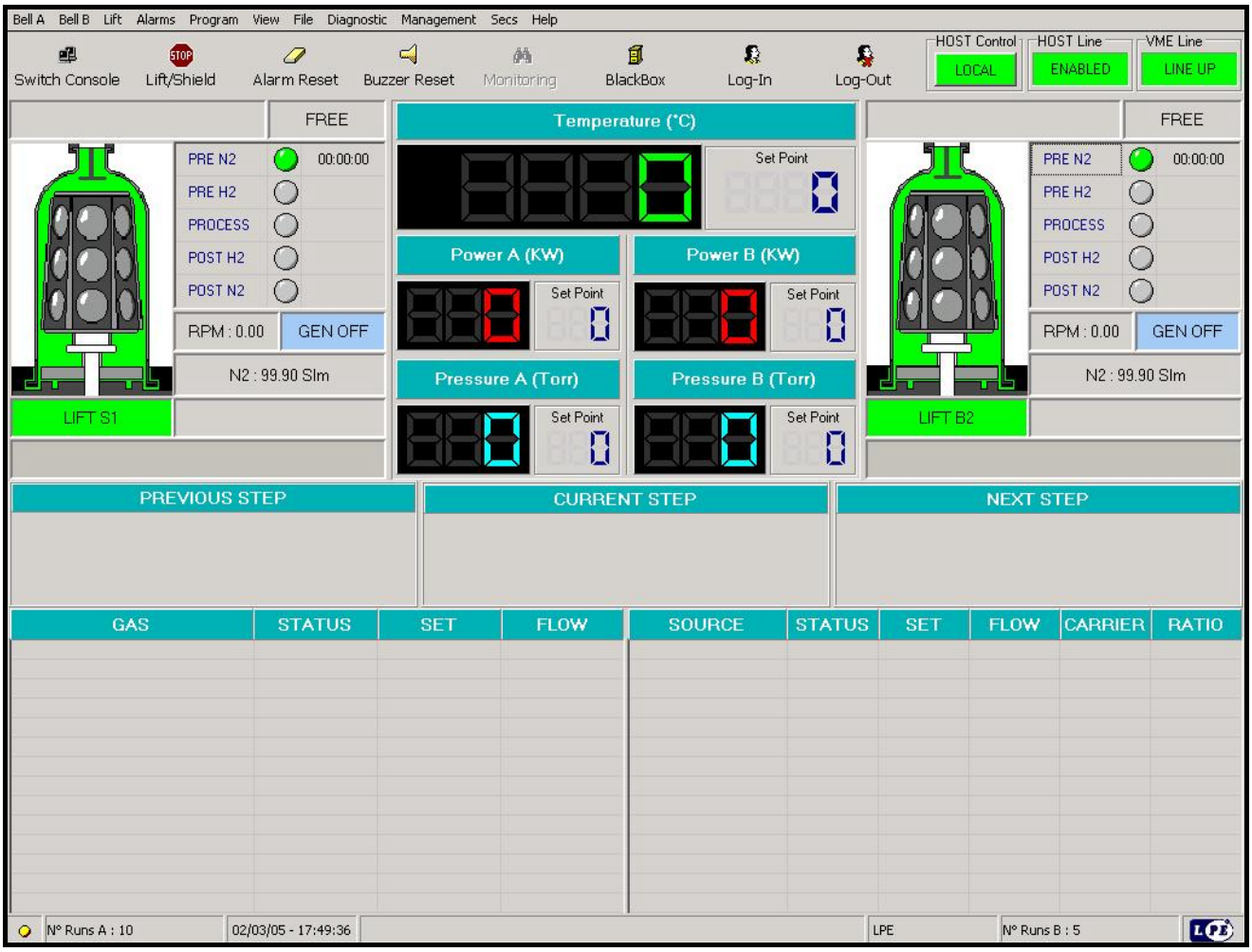

NOTE: We advise you to check the if configuration parameters are correct by selecting the **VIEW CONFIGURATION command in the VIEW MENU.**

9. Compare the displayed parameters with those recorded on the **PARAMETER TABLE**. Re-align them in case of discrepancies.

10. The machine is now ready for restart.

B. Start-up after a medium period shut-down

1. Activate the reactor as in **A1.**
2. Open and power up machine facilities (water, compressed air, scrubber, air exhaustion, gas).
3. Condition gas lines and bubbler, and carry out the jobs required for first start-up as described in **Chapter 16.**

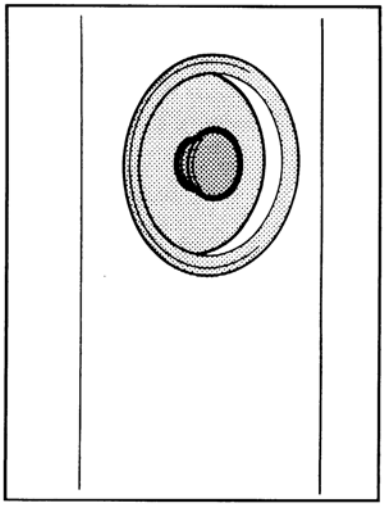

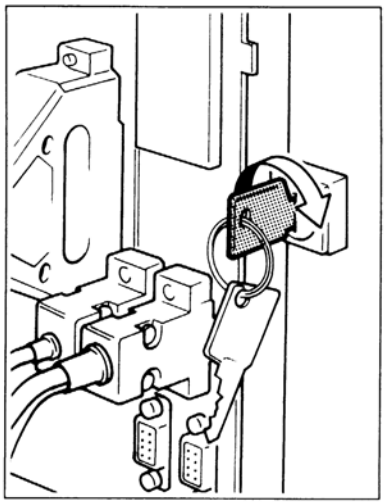

C. After you have eliminated the cause of the **EMERGENCY STOP**, follow the procedure below to restart:

a. Reset the EMERGENCY STOP on the reactor.

b. Turn the power-up key inside the ELECTRONIC RACK.

c. The reactor will begin purging **PRE N_2** automatically.

NOTE: It is the customer's responsibility to decide what action to take regarding the currently processed product.

Vol.2

LPE S.p.A.
Powering the future

LPE s.p.a. - Via Falzarego, 8 - 20021 BOLLATE (MILAN) ITALY
Ph. ++39.02.3834151 - Fax ++39.02.38306118 - E-mail: info@lpe-epi.com

INSTRUCTION MANUAL

PE 2061 REL. #11 VOL.2

Chap. (21) Operation Manual
Chap. (22) Quick reference
Chap. (23) Troubleshooting

Original version
ENGLISH

COPYRIGHT © 2002 **LPE EPITAXIAL TECHNOLOGY**
all rights reserved

No part of these Operating Instructions may be reproduced or used under any form or with any electronic or mechanical method including photocopying, recording with any other method, without the permission of the owner of the Copyright. The drawings are of exclusive ownership.

PE2061 OPERATION MANUAL

Revision: 05

ALL RIGHTS RESERVED - LPE S.p.a.

This document is provided with the explicit condition that it must be considered as absolutely reserved and that it must not be reproduced, even partly, neither shown nor revealed to a third party, or however it must not be used in such ways or for purposes different from the ones authorized in writing from the Society.

☐ CONTROLLED Copy n .....
This is a controlled copy, it has been registered and it is subject to the updating service.

☐ NOT CONTROLLED Copy
This is a not controlled copy, it is for information only and it is not subject to upgrading.

05	25/03/2011	New Software version (GUI 2.4#4 VME 5.4#2) for remote terminal USB and long coil
04	05/11/2009	New Software version (GUI 2.3#2 VME 5.3#3) for Solexel (PT0120)
03	14/11/2007	Late Load Warning
02	03/07/2007	New Vent Management & Spoiler OFF
01	25/08/2005	Overlap with 2061 & modification highlight
00	01/07/2005	New Release
Rev.	Date	Description

CHAPTERS

PRELIMINARY **5**
1.1 START UP PROCEDURE 5
2 GUI GRAPHIC USER INTERFACE **12**
3 BELL A - BELL B **21**
3.1 ACCESS LEVEL TO BELL A BELL B MENU 21
3.2 RUN & FORCED RUN 22
3.3 START HOLD/STOP HOLD 24
3.4 ADJUST RECIPE RUNNING 25
3.5 JUMP STEP 26
3.6 PROCESS STOP 26
3.7 PROCESS ABORT 26
3.8 STOP/RESTART ROTATION 26
4 LIFT **27**
4.1 ACCESS LEVEL TO LIFT MENU 28
4.2 USING THE LIFT WINDOW 28
4.3 ERROR MESSAGE OF LIFT WINDOW 29
5 ALARMS **30**
5.1 ACCESS LEVEL TO ALARM MENU 30
5.2 VIEW ALARMS 31
5.3 VIEW RECORDED ALARMS 32
5.4 ACTIONS AFTER AN ALARM 34
6 PROGRAM **35**
6.1 ACCESS LEVEL TO PROGRAM MENU 35
6.2 EDIT RECIPE 36
6.2.1 Recipe format 37
6.2.2 Difference between line and step 38
6.2.3 Settings of rotation parameter 39
6.2.4 How automatic calculation works 44
6.2.5 Automatic DOPE1/DOPE3 Or DOPE1/DOPE2 switch 45
6.2.6 Automatic SOURX1/SOURX2 switch 47
6.3 CREATING A NEW RECIPE 48
6.3.1 Spoiler ON 52
6.3.2 Spoiler OFF 52
6.3.3 Save recipe time with the "Vent Function" 56
6.3.4 How to use the "Vent Function" 58
6.3.5 Making a recipe executable 59
6.3.6 Lock/Unlock a recipe 60
6.3.7 Save a recipe 61
6.3.8 Opening and Modifying an existing recipe 62
6.3.9 Exit 62
6.4 RECIPES ERRORS 63
6.5 AUTO EDIT 65
6.5.1 Intrinsic 66
6.5.2 Deposition 67
6.5.3 Susceptor etch 70
6.6 ADJUST RECIPE STORED 71
6.7 SET ROTATION PARAMETERS 74
7 VIEWS **76**
7.1 ACCESS LEVEL TO VIEW MENU 76
7.2 RECIPE RUNNING 77

7.3 DISPLAY RECIPE 78
7.4 ALARMS DIGITAL I/0 79
7.5 ANALOG I/O 82
7.6 GAS PANEL 84
7.7 GENERATOR STATUS 87
7.8 PE2061SETTINGS 87
7.9 REACTOR CONFIGURATION 88
7.9.1 MFC Range 88
7.9.2 Purge Parameters 90
7.9.3 Parameters 92
7.9.4 A Power Calibration 94
7.9.5 B Power Calibration 95
7.9.6 View Set Default Rotation Parameters 96
7.9.7 Gas inlet pressures 98
7.9.8 Automatic Editor 99
7.9.9 Chamber ID 101
7.9.10 Dope Switching 102
7.9.11 Reduced Pressure Options 103
7.10 REACTOR INSTALLATION 105
7.10.1 Reactor Options 105
7.10.2 Digital Input/Alarms 107
7.11 REACTOR CONSUMPTION 109
7.12 BLACK BOX PREVIOUS MONTH 111

8 FILE 112

8.1 ACCESS LEVEL TO FILE MENU 112
8.2 SELECT BELL A RECIPES FROM FLOPPY DISK 113
8.3 SELECT BELL B RECIPES FROM FLOPPY DISK 114
8.4 SELECT BELL A RECIPES FROM HARD DISK 115
8.5 SELECT BELL B RECIPES FROM HARD DISK 116
8.6 BACKUP CONFIGURATION FILES 117
8.7 RESTORE CONFIGURATION FILES 117
8.8 BACKUP ALL RECIPES (A&B) 117
8.9 RESTORE ALL RECIPES (A&B) 117
8.10 OPEN WINDOWS EXPLORER 117
8.11 OPEN CONSOLE C:\ 118

9 DIAGNOSTIC 119

9.1 ACCESS LEVEL TO DIAGNOSTIC MENU 119
9.2 ALARMS/DIGITAL INPUT 120
9.3 ANALOG I/O 123
9.4 ROTATION TEST 127
9.5 GAS PANEL TEST 128
9.5.1 How to change status 129
9.5.2 Gas Panel Test with the "Automatic DOPE1/DOPE3 OR DOPE1/DOPE2 switch" 132
9.6 SPOILER 135
9.7 GENERATOR 136
9.8 O-RING LEAK TEST 137

10 MANAGEMENT 138

10.1 ACCESS LIST TO MANAGEMENT MENU 138
10.2 REACTOR CONFIGURATION 139
10.2.1 MFC Range 139
10.2.2 Gas Inlet Pressures 141
10.2.3 Reduced Pressure Options 143
10.2.4 Purge Parameters 146
10.2.5 Parameters 149
10.2.6 Late Load Warning Logic 152
10.2.7 Automatic Editor 155
10.2.8 A- Power Calibration 157
10.2.9 B- Power Calibration 159

10.2.10 Chambers ID ... 161
10.2.11 Dope switching ... 162
10.2.12 Set Default Rotation Parameters ... 164
10.3 REACTOR INSTALLATION ... 165
10.3.1 Reactor Options ... 166
10.3.2 Digital Input /Alarms ... 170
10.4 REACTOR CONSUMPTION ... 179
10.5 REACTOR COMMUNICATION ... 182
10.6 LIFT MANAGEMENT ... 183
10.6.1 Set the Lift Loading/Unloading level ... 186
10.7 VME CONFIGURATION ... 187
10.8 SWITCH CONSOLE CONFIGURATION ... 188
10.9 SWITCH CONSOLE MANAGEMENT ... 189
10.10 REACTOR SHUTDOWN ... 189
10.11 APPLICATION SHUTDOWN ... 189
10.12 PC SHUTDOWN ... 189
10.13 REACTOR & PC SHUTDOWN ... 190
10.14 EMERGENCY SHUTDOWN ... 190
10.15 CONFIGURATION PARAMETERS ... 191

11 SECS ... 194

11.1 COMMUNICATION PARAMETERS ... 194
11.2 VIEW SECS MESSAGE ... 196

12 HELP ... 197

12.1 ACCESS LEVEL TO HELP MENU ... 197
12.2 GUI MANUAL ... 197
12.3 ABOUT ... 198

13 LOG IN AND LOG OUT FROM GUI ... 199

13.1 GENERAL NOTES ABOUT USERS AND ACCESS LEVEL ... 199
13.2 ACCESS LEVEL REFERENCE TABLE ... 200
13.3 NONE LOGGED ... 202
13.4 LOG-IN ... 203
13.5 LOG-OUT ... 205
13.6 CREATES A NEW USER AND MODIFY THE ACCESS LEVEL ... 206

14 REFERENCE ON SCREEN MESSAGES LIST AND DESCRIPTION ... 209

Preliminary

1.1 Start up procedure

Case A : Generator Off – Reactor Off – Workstation Off

Generator:

1) Make sure all generator doors are properly closed and locked.
2) Turn Safety Door Switch to Included position.
3) Turn Automatic/Manual key to Automatic position.
4) Make sure all (reactor and generator) emergency push button are released. Turn button clockWise in order to pull it out.
5) Switch on Power generator by turning the handle:

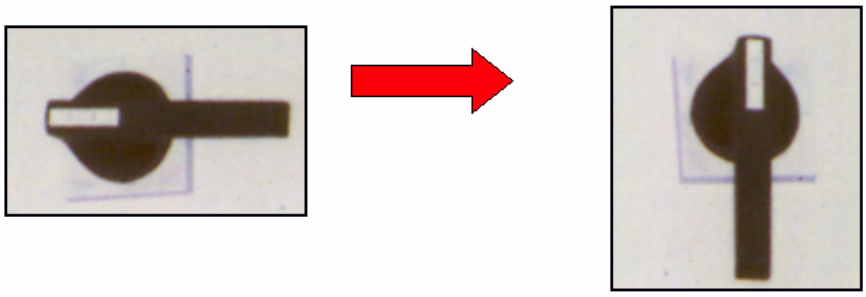

Reactor:

1) Turn the Switch On key placed in the VME rack clockWise and release it.

2) The reactor software should start automatically. Verify that Main CPU and rotation CPU led are lighted as the following sequence, to understand if the reactor is ready to communicate with the Workstation.

TVM231(Main CPU)

TVM231/ROT (Rotation CPU)

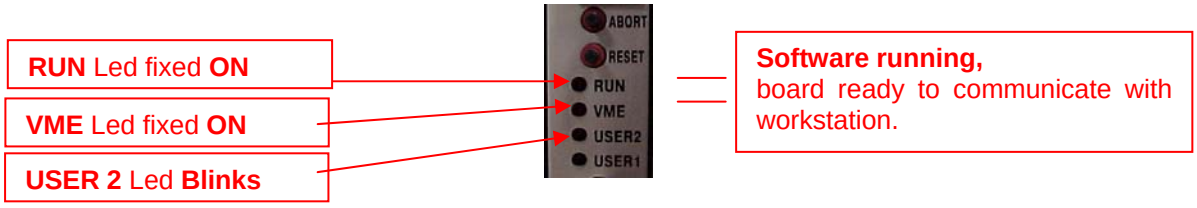

TVM220(Main CPU)

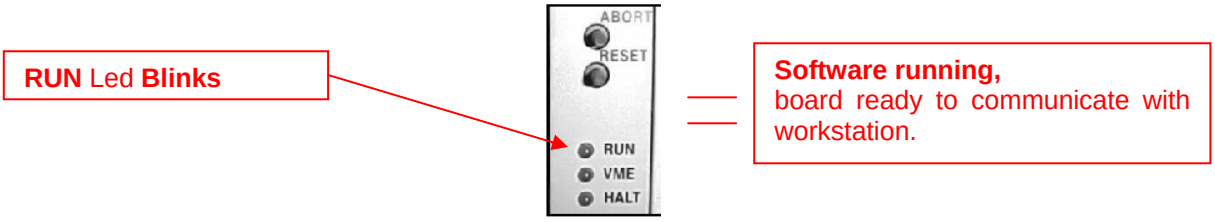

TVM201(Rotation CPU)

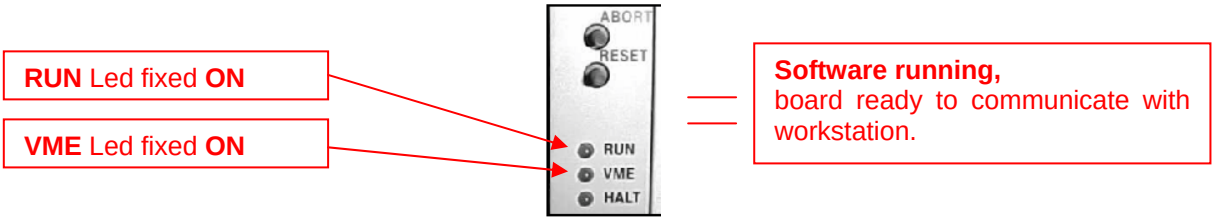

If the led lighted are different than the above condition it ill be necessary press the reset button on the TVM231/ROT or TVM201.

Workstation:

1) Switch on the workstation by pressing the power-on button.
2) Log in as user LPE. Type **lpe**.
3) Enter password. Type **lpe**.
4) Double-click on the LPE logo available into Workstation desktop.

5) The application will start in few seconds will download the configuration File to VME.

6) When downloading is completed, the VME Line will be in line up status and the reactor will be ready for use.

Case B: Generator On - Reactor On - Workstation Off

1) Switch on the workstation by pressing the power-on button.
2) Log in as user lpe. Type **lpe**.

3) Enter password . Type **lpe**.

4) Double-click on the LPE logo.

5) The application will start in few seconds and will download the configuration File to VME.

6) When downloading is completed, the VME Line will be in line up status and the reactor will be ready for use.

Case C: Generator On - Reactor Off - Workstation On

Reactor:

1) Turn key clockWise and release it.

2) The reactor software should start automatically. Verify that Main CPU and rotation CPU led are lighted as the following sequence, to understand if the reactor is ready to communicate with the Workstation.

TVM231(Main CPU)

TVM231/ROT (Rotation CPU)

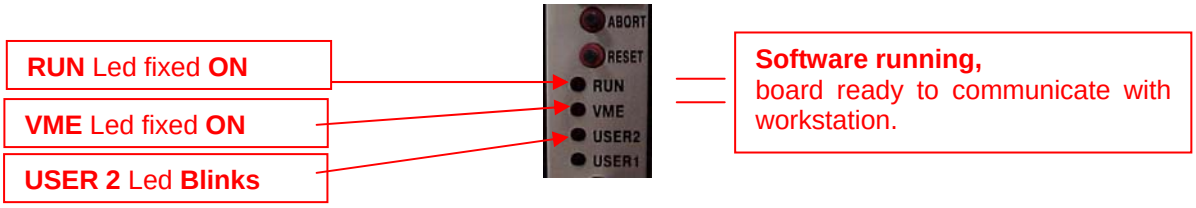

TVM220(Main CPU)

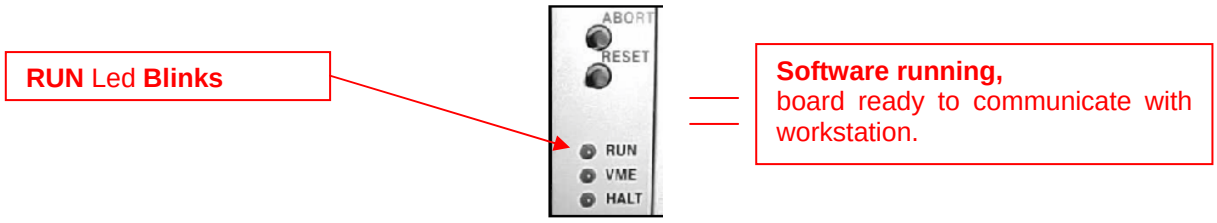

TVM201(Rotation CPU)

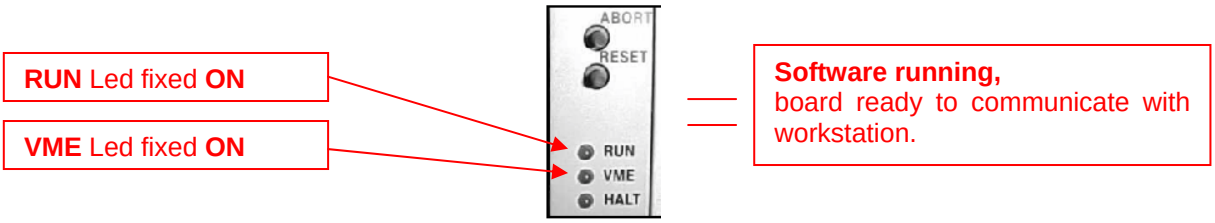

If the led lighted are different than the above condition it ill be necessary press the reset button on the TVM231/ROT or TVM201.

Case D: Generator Off - Reactor On - Workstation On

Generator:

1) Make sure all generator doors are properly closed and locked.
2) Turn Safety Door Switch to Included position.
3) Turn Automatic/Manual key to Automatic position.
4) Make sure all (reactor and generator) emergency push button are released. Turn button clockWise in order to pull it out.
5) Switch on Power generator by turning the handle:

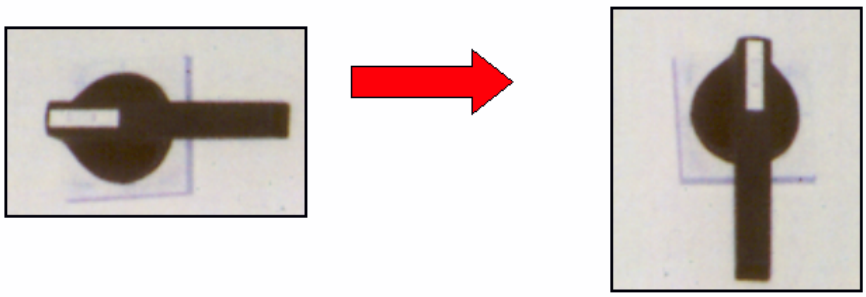

2 GUI Graphic user Interface

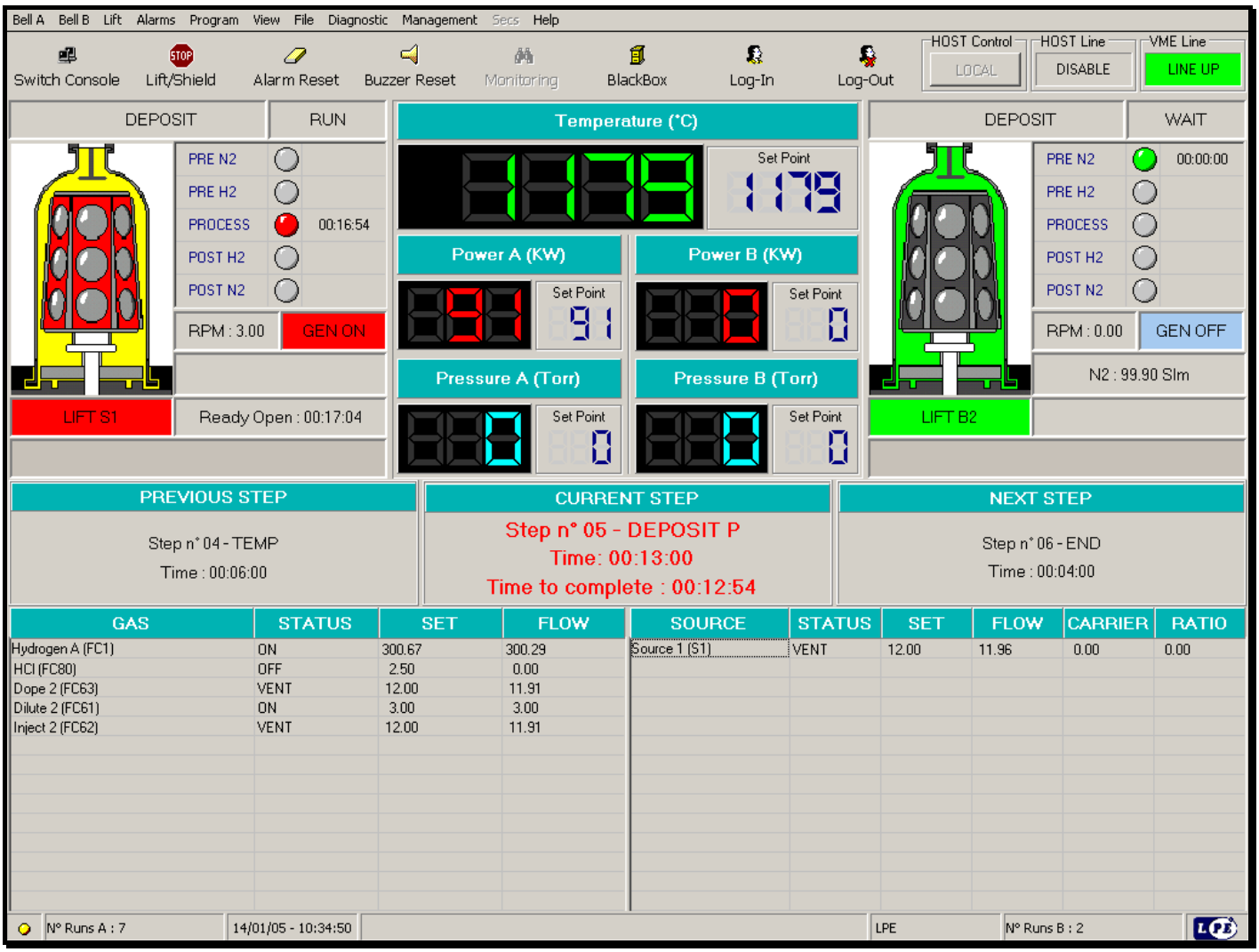

The figure shows the main window of PE2061 graphic user interface (GUI). The following zones can be found in these windows:

Header:

STATUS DISPLAY is located in the header:

- **HOST Control**: this is a button. Host control can be **LOCAL** or **REMOTE**. If control is local all menu keys in the window are available to the operator. If control is remote, the host computer can control reactor and operator can only display data, or move lift, or switch control to local using this button.

- **HOST Line**: This field displays the communication status with the host computer. **ENABLE** means that the communication is up, **DISABLE** means that the communication is down, **and MODIFYNG** means that the communication is going up.

- **VME Line**: this field displays communication status with reactor VME control. **LINEUP** means that communication is up; **LINEDOWN** means that communication is down, **CONFIG** means that workstation is sending configuration to VME**. If the status is linedown, the operator can't control the machine using the graphical user interface**.

and the **CONTROL BUTTONS:**

- **Switch console:** if is available the remote control system, the operator by pressing this button can switch the control to the reactor from the main controller to the remote one and vice versa.

- **STOP Lift/Shield:** if the operator presses this button, the lift/shield, if moving, stops.

- **Alarm Reset:** if the operator presses this button, the alarm is reset.

- **Buzzer Reset:** if the operator presses this button, the buzzer is reset.

- **Monitoring:** if the operator presses this button, the monitoring programs starts. (NOT AVAILABLE)

- **Black Box:** if the operator presses this button, the black box appears

- **Log-In:** if the operator presses this button opens the password windows in which any user can insert his own user-id and password to accede to menus and command permitted for his job

- **Log-Out:** logs out current user. No action can be undertaken until a new log-in

Menu bar: Using the mouse the operator can access one of the menu items. The functions associated to each menu item are described in the following chapters.

Bell Jar CRT screen section:

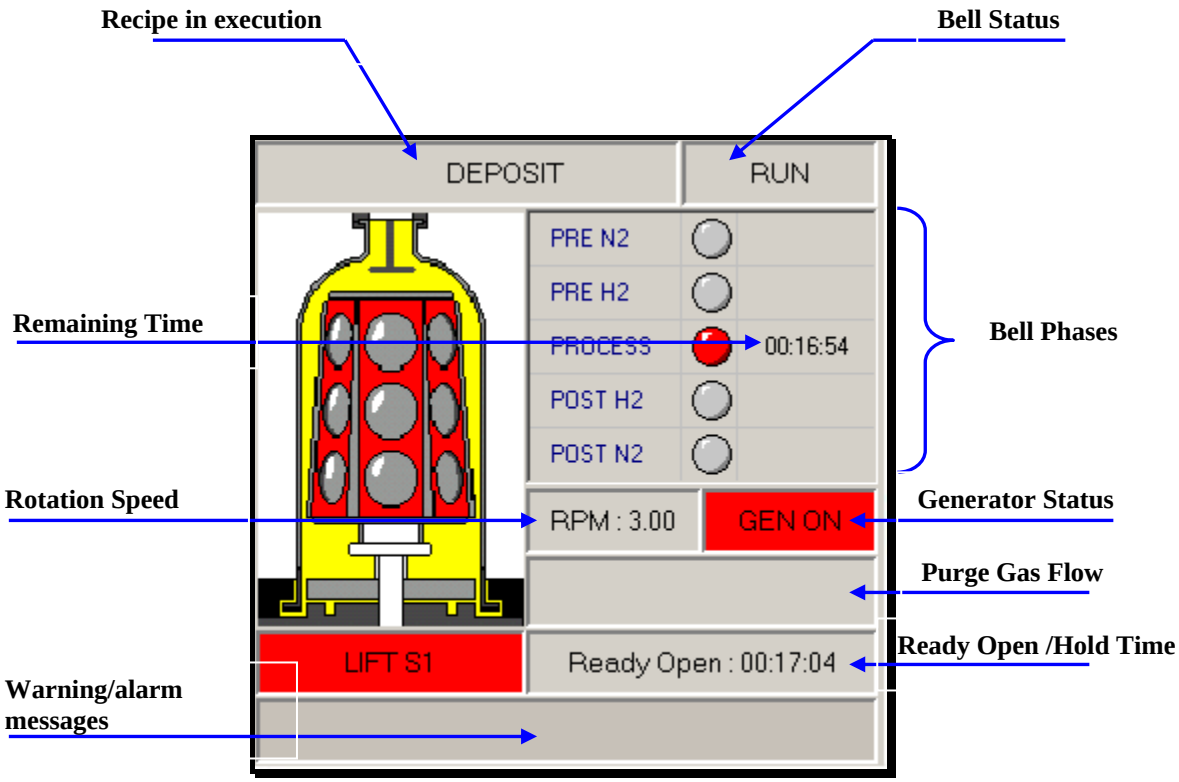

Picture of bell-jar (A side on top CRT on the top left and B side on top right)

There are four main conditions displayed by the bell jar picture:

- With susceptor inside: shutter plate is closed

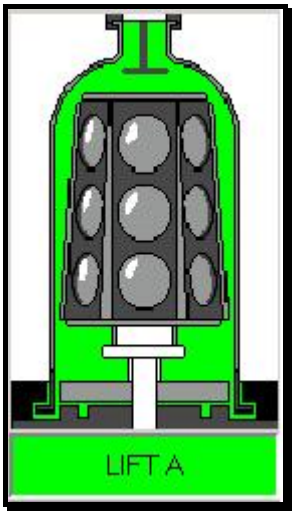

- With half susceptor: shutter plate is open

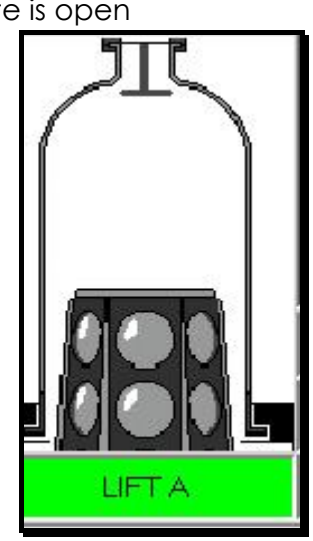

- With half susceptor and two arrow: lift is moving

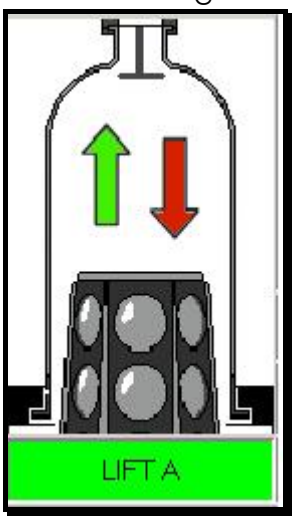

- With half susceptor and the message "LOAD LEVEL": lift is at the loading/unloading level.

The word LIFT:
With GREEN background : LIFT is enabled to move
With RED background : LIFT cannot be moved
With GRAY background : LIFT cannot be moved

Recipe in Execution and Bell Jar Status:
This field contains the indication of the name of the selected recipe (if any) and its status (FREE, RUN, WAIT, END, ABORT, ALARM, HOLD, STOP).

- **Free status**

PRE N2 phase is ended and the bell can be opened.

- **Run status**

A recipe has been selected and reactor is either in PRE-N2 purge or PRE-H2 purge or PROCESS (PRE N2 and PRE H2 purges have been completed and the recipe selected is in execution). The bell cannot be opened.

- **Wait status**

WARNING! FOR MOD. PE2061 ONLY - A recipe has been selected but, being the OTHER bell-jar already in RUN status, this bell-jar is waiting the last minutes of the process on the other bell-jar. There is not a power over lap.

PE2061:

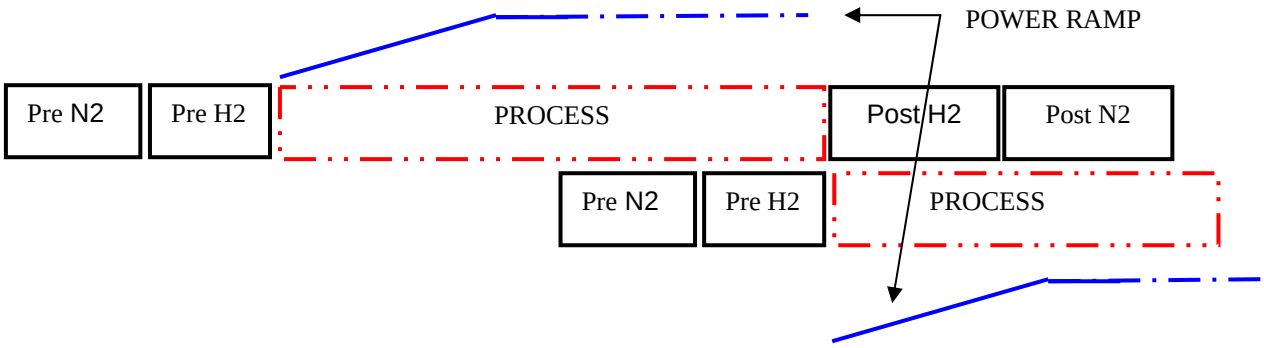

WARNING! FOR MOD. PE2061S ONLY - A recipe has been selected but, being the OTHER bell-jar already in RUN status, this bell-jar is waiting the last minutes of the process on the other bell-jar. This time is the sum of the **PRE H2** time and the **PRE H2 Power Ramp Time.** During the **PRE H2 Power Ramp Time** there is the power overlap between the two station.

PE2061S:

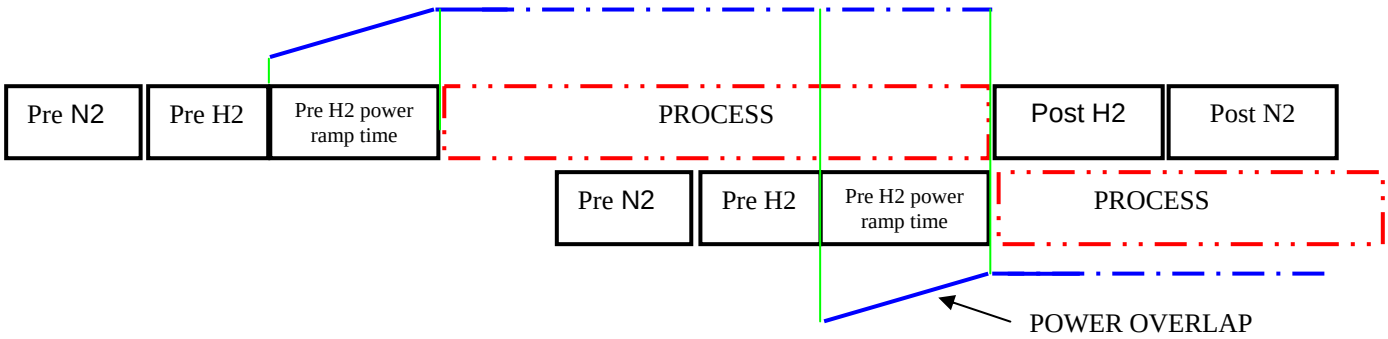

- **End Status**

The recipe is completed and reactor is either in POST H2 or POST N2 phase.

- **Abort Status**

The recipe has been aborted and the reactor is either in POST H2 or POST N2 phase.

- **Alarm Status**

Reactor is in alarm condition. If the phase is PROCESS, the recipe will be aborted and reactor will go in POST H2.

- **Hold Status**

Recipe execution is frozen to the last condition before receiving the HOLD/RESTART command.

- **Stopped status**

The recipe has been stopped and the reactor is either in POST H2 or POST N2 phase.

Bell Jar Phase / remaining time:

Beside bell-jar picture, there is the indication of the phase (PRE N2, PRE H2, PROCESS, POST H2, POST N2) and of the time left.

- **PRE N2** (Pre purge N2): Nitrogen pre-purge is going on
- **PRE H2** (Pre purge H2): Hydrogen pre-purge is going on
- **PROCESS**: the selected recipe is in execution
- **POST H2** (Post purge H2): Hydrogen post-purge is going on
- **POST N2** (Post purge N2): Nitrogen post-purge is going on

Rotation Speed:

If bell-jar is in process status: susceptor speed will be displayed. ClockWise or counterclockWise direction is indicated by +/- symbols.

Gas Flow:

If bell-jar is in purge status: Nitrogen flow or Hydrogen flow will be displayed according to purging phase.

Ready Open - Hold Time:

If the bell-jar is in PROCESS, POST H2 or POST N2 status, there is the indication of time left to process end and to bell-jar opening.
If bell-jar is in HOLD status (PROCESS phase) there is the indication of elapsed time in current status.
If phase is PRE H2 or PRE N2, this field is not used.

Alarm Message:

Zone dedicated to alarm messages (yellow for WARNINGS, red for ALARMS).

Top GUI screen Section in the center (PROCESS phase only)

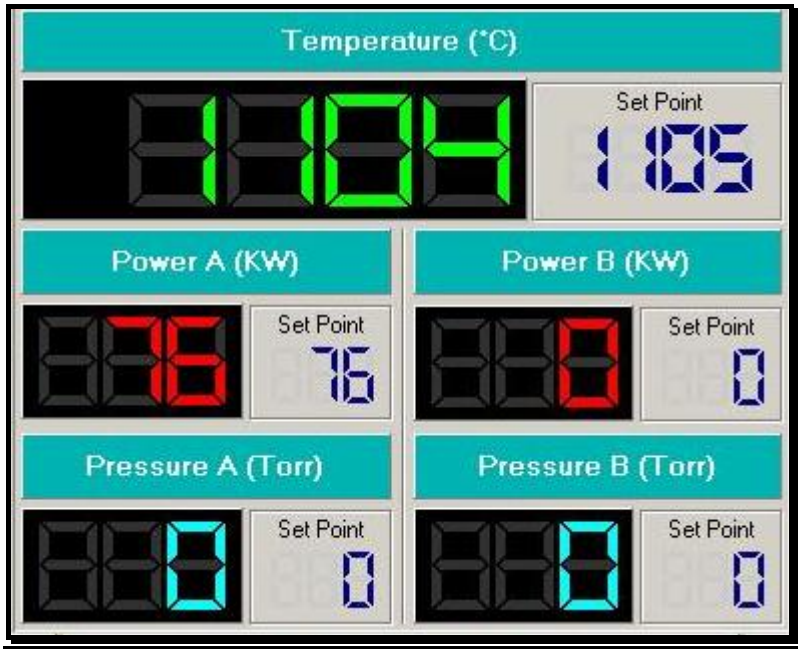

- **Temperature (°C):** actual bell temperature indication with set-point in smaller digits. (Measuring Unit: Celsius degree)
- **Power A (KW):** actual generator power indication with set-point in smaller digits for A side. (Measuring Unit: Kilo Watt)
- **Power B (KW):** actual generator power indication with set-point in smaller digits for B side. (Measuring Unit: Kilo Watt)
- **Pressure A (Torr):** actual bell A pressure indication with set-point in smaller digits. (Measuring Unit: Torr)
- **Pressure B (Torr):** actual bell B pressure indication with set-point in smaller digits. (Measuring Unit: Torr)

Center GUI screen Section

Displays actual status of the running recipe (if any). The window is divided into three zones.

- **Previous Step:** previous recipe step (if any) with total duration.
- **Current Step:** current recipe step with elapsed time and total duration. It is displayed in red
- **Next Step:** next step with total duration.

Lower GUI screen Section

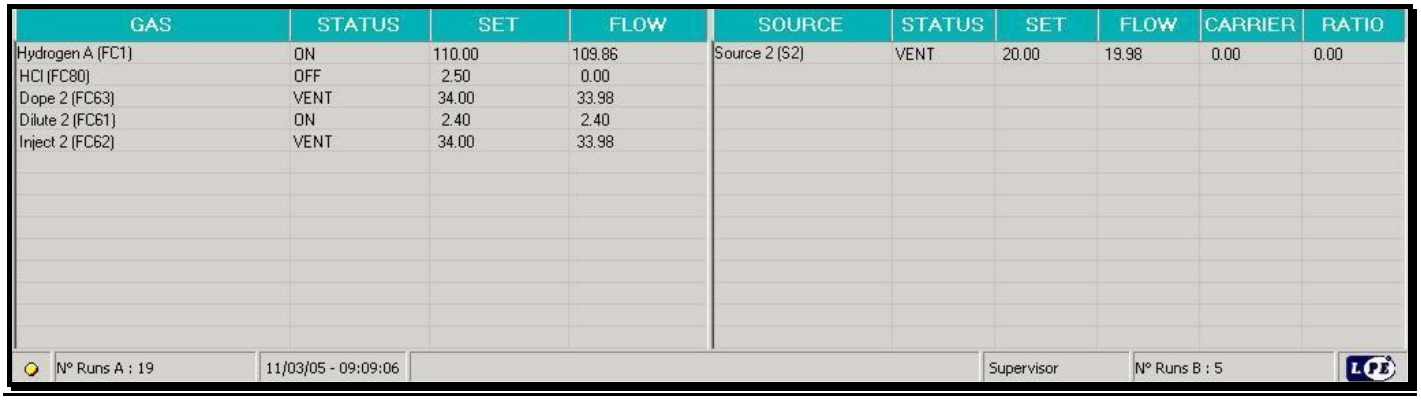

GAS	STATUS	SET	FLOW
Hydrogen A (FC1)	ON	110.00	109.86
HCl (FC80)	OFF	2.50	0.00
Dope 2 (FC63)	VENT	34.00	33.98
Dilute 2 (FC61)	ON	2.40	2.40
Inject 2 (FC62)	VENT	34.00	33.98

SOURCE	STATUS	SET	FLOW	CARRIER	RATIO
Source 2 (S2)	VENT	20.00	19.98	0.00	0.00

N° Runs A : 19 | 11/03/05 - 09:09:06 | Supervisor | N° Runs B : 5

Displays process gases actually used in current process with indication of:

- **Gas:** kind of gas in bell (HCL, SX1, DOPE1…)
- **Status:** status of the process gas (OFF, ON, VENT, BELL…)
- **Set:** MFC set point
- **Flow:** MFC real flow
- **Carrier:** source vaporizer H2 carrier.
- **Ratio:** source vaporizer mix ratio.

Run counter:

- **N. Runs A**: displays a counter of all runs performed at A side. This counter can be reset on the Management → Reactor Consumption menu.
- **N. Runs B**: displays a counter of all runs performed at B-side. This counter can be reset on the Management → Reactor Consumption menu.

Date and Time: shows the current date and hour.

Logged users: shows the current User logged-in

3 Bell A - Bell B

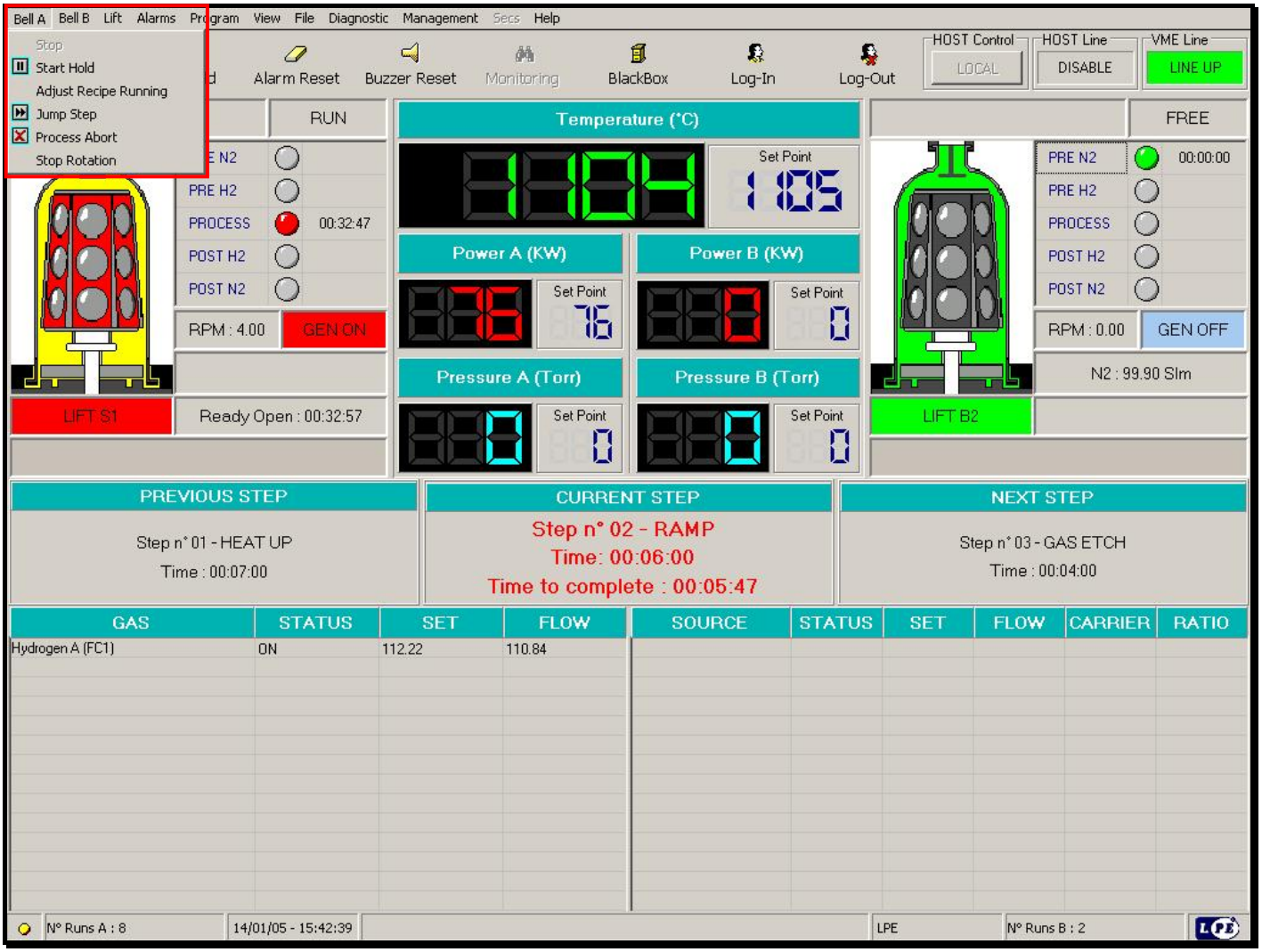

3.1 Access Level to Bell A Bell B menu

Users have different access to the Bell A/B menu according to the below Access list.

LPE Level1 = Full Access

Supervisor Level 2 = Full Access

Maintenance Level 3 = Full Access

Programme Level 4 =Full Access

User Level 5 = Partial access according to Reactor Options configuration

3.2 Run & Forced Run

The RUN command starts the epi process and changes bell-jars status to RUN or WAIT depending on the situation.
At every use of RUN command, if a threshold is exceeded (i.e. total runs with same susceptor) the "Reactor Consumption" window will be displayed.
The threshold exceeded is highlight in yellow color.
Confirmation required to go on.
All "Reactor Consumption" thresholds can be settled in the Management → Reactor Consumption menu.

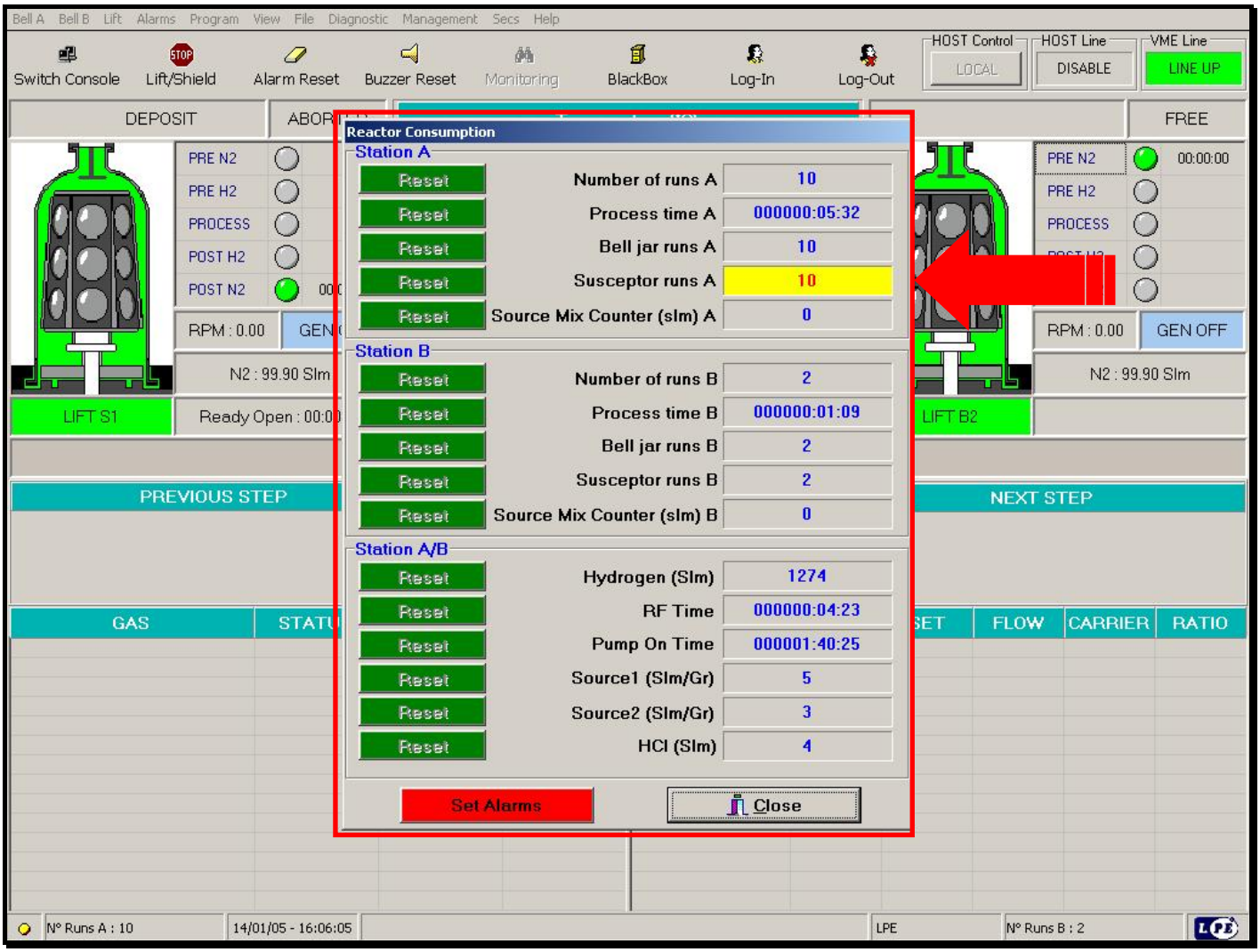

To select a recipe, with mouse, click two-times on the recipe name and than click the OK button to confirm or CLOSE button to return back.

Only the recipes related to the selected Bell (A or B) are shown to the User. The selected recipe will be displayed together with two buttons:

- **OK:** the selected bell-jar and recipe will be set to RUN status unless the other bell-jar is already in RUN or PROCESS status. In this case, the selected bell-jar and recipe will be set to WAIT status. In both cases the RUN command is completed and the general display is shown.

- **Close: to** choose another recipe.

Execution of a RUN command is stored in the BLACK BOX.

SPECIAL SITUATION: how to force a process

Choose the RUN command when the bell jar is in POST H2 or POST N2 purge to force a process.

The "CONFIRM FORCED RUN?" window appears.

By choosing the OK button, the usual RUN command procedure will be followed, but with some differences.

- If the bell jar is in POST H2 and has to be moved to RUN status, it will directly go to PROCESS status, skipping the useless (in this case) PRE H2 purge.

- If the bell jar is in POST N2 and has to go to RUN status, it will directly go to the PRE H2 purge.

- If the bell jar goes to WAIT status, there will be no modification on the POST H2 & N2 purges until next RUN status.

WARNING!
ONLY MOD. PE 2061S

- If the bell jar is in POST H2 and has to be moved to RUN status, it will go to PRE H2 status.

Note:
The FORCED RUN command can be denied to user with access level only to **User Level 5** selecting the apposite options in Configuration menu.

3.3 Start Hold/Stop Hold

This command is available only when a bell jar is in process.
Select this command to hold the recipe execution.
Please note that use of START HOLD/STOP HOLD command during a ramp, will freeze it in the current situation.
Enter this command again to restart the process.
When the process is in HOLD status, HOLD time is counted and displayed.
The execution of a HOLD command is stored in the BLACK BOX.

Note:
The START HOLD/STOP HOLD command can be protected under process engineer password by selecting the apposite options on Configuration menu.

WARNING!
Hold command is not allowed when the other bell jar is in **WAIT** status. It will be necessary to stop the bell jar in **WAIT** before proceeding.

3.4 Adjust Recipe Running

This command is available only when a bell jar is in process. Select this command to modify process running under the following conditions:

- The process is in HOLD status.
- Recipe lines belonging to current step cannot be modified. Current step is highlighted in yellow color.
- Recipe lines declared as not modifiable (red locker) cannot be modified.

The modifiable values are:

- Start value, stab value, stab time when available.
- Stab time for the entire step.

For details see Program → Adjust Recipe Stored command.

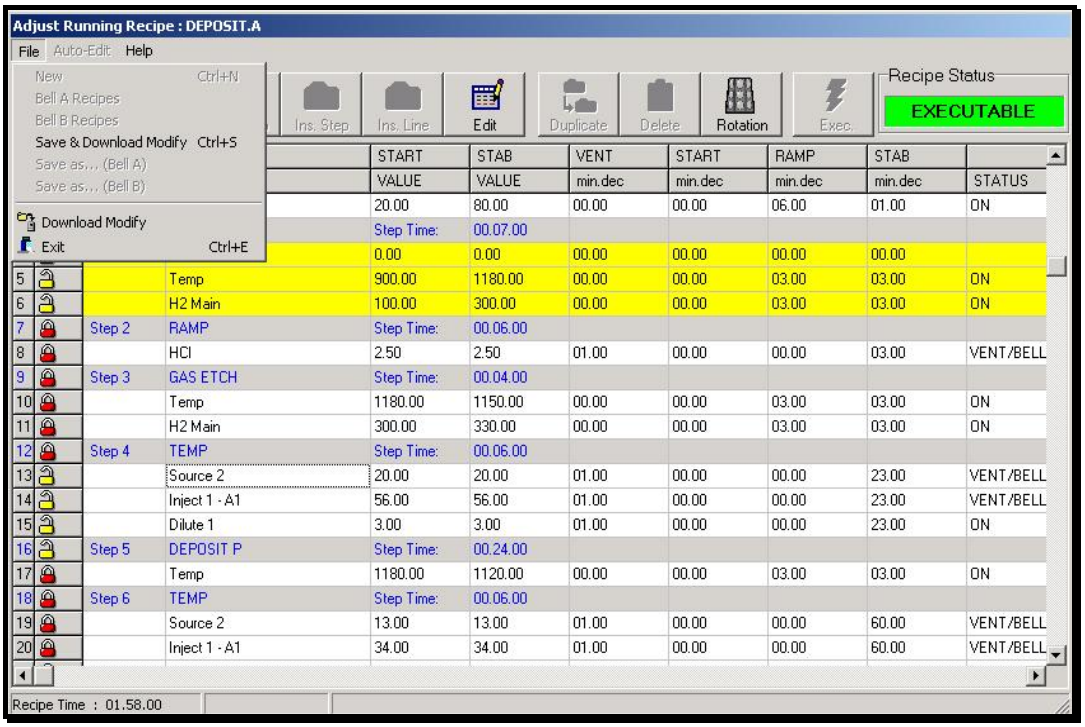

Once the modification has been confirmed, click on the ***Download*** button or select ***Download Modify*** from ***File*** menu. After that it is necessary restart the process through the ***Stop Hold*** command.
Then the MODIFIED program will be executed.
However the modifications will not be stored in the workstation and will not be executed the next time the recipe will be used.
If the MODIFIED program should be also saved, select ***Save & Download Modify*** from file menu.
If the program is to be modified WITHOUT immediately executing the modifications, it is preferable to use the ADJUST RECIPE STORED command.

3.5 Jump Step

This command is available only when a bell jar is in process.
Select this command to stop current step and immediately jump to next step.

IMPORTANT !!!
Jump is immediate and current step will not be completed.
As an example, during a temperature ramp, jump command will leave the temperature value at the current value and temperature will not increase/decrease at the end value of the ramp.
The command requires confirmation.
The command cannot be used during the last step or in HOLD status (error message).
The execution of a JUMP command is stored in the BLACK BOX.

3.6 Process Stop

This command is available only when a bell jar is in RUN status during the PRE N2 or PRE H2 status.

WARNING!
ONLY FOR MOD. PE2061:
STOP command will cause bell jar to jump from PRE N2 or PRE H2 directly to PRE N2.

WARNING!
ONLY FOR MOD. PE2061S
STOP command will cause bell jar to jump from PRE N2 to PRE N2 and from PRE H2 to POST H2.

The execution of a STOP command is stored in the BLACK BOX.

3.7 Process Abort

This command is available only when a bell jar is in PROCESS.
Select this command to stop process execution and jump directly to POST H2 purge status.
The command requires confirmation.
The execution of an ABORT command is stored in the BLACK BOX.

3.8 Stop/Restart Rotation

This command is only for skilled engineers trained in the use of PE 2061 or PE2061S Epitaxial Reactor.

Select this command to stop rotation in order to facilitate temperature measurement.

The process must be in HOLD STATUS and silicon must not be in BELL STATUS (sourx 1 or 2 or 3 = OFF).

4 Lift

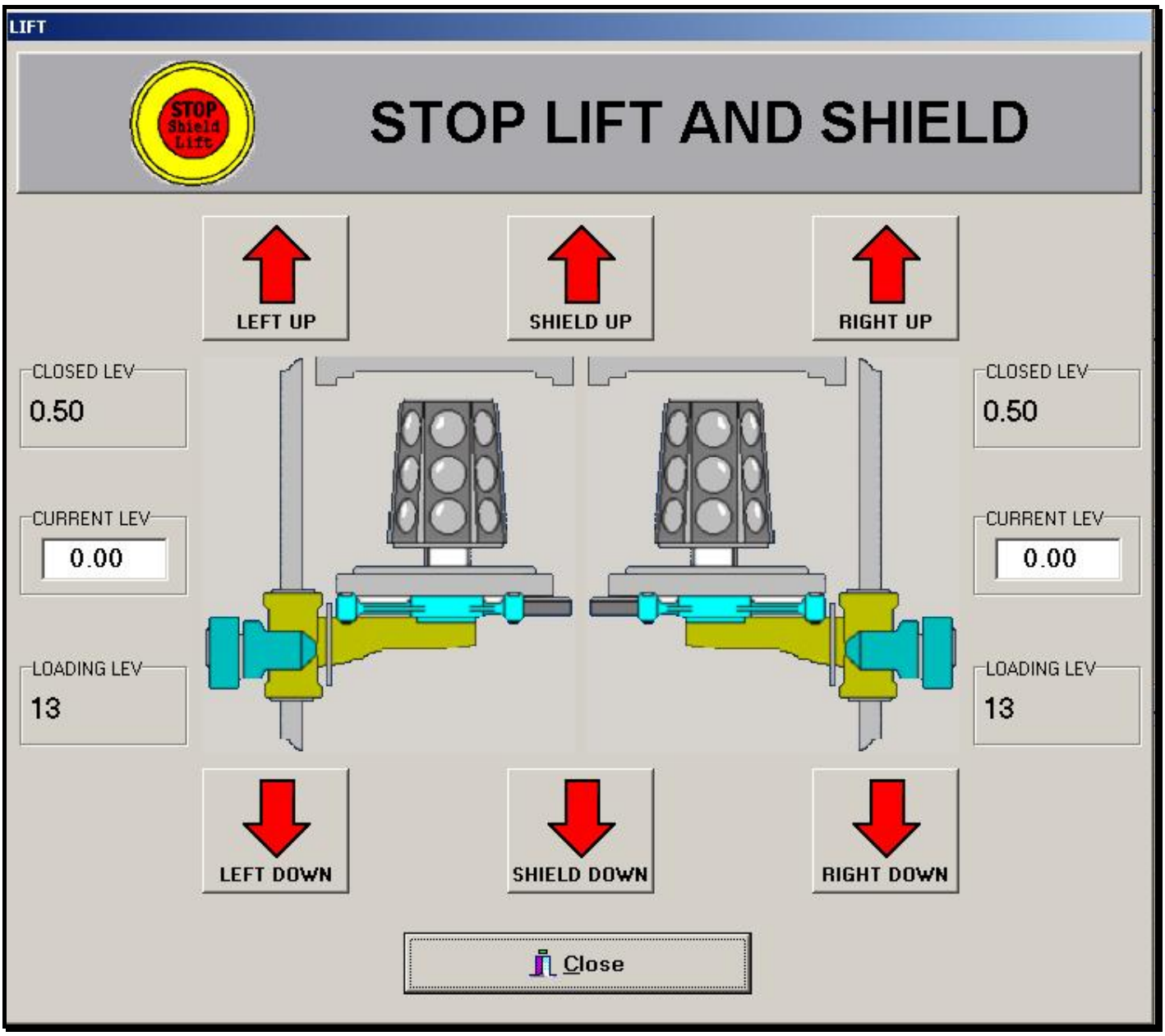
LIFT
STOP
Shield
Lift
STOP LIFT AND SHIELD
LEFT UP
SHIELD UP
RIGHT UP
CLOSED LEV
0.50
CURRENT LEV
0.00
LOADING LEV
13
CLOSED LEV
0.50
CURRENT LEV
0.00
LOADING LEV
13
LEFT DOWN
SHIELD DOWN
RIGHT DOWN
Close

4.1 Access Level to lift menu

All users can access to this menu.

4.2 Using the lift window

By selecting the "lift" menu the reactor operator can get the control window for lifts and shield movements and proceed to wafers loading/unloading.

By selecting the correspondent arrow button the operator can move up and down:

- The shield .
- The lift for chamber A.
- The lift for chamber B.

The lift motion is shown on the **"Current level"** field. The **"current level"** is the feedback from the potentiometer mounted on each lift.

Note:
When the lift is completely up in the bell-jar field a susceptor will appear and on the **"current level"** field will be displayed the value of **0,50** Vdc.
When the operator press the down arrow the lifts automatically stop in the load/unload position stored in the computer memory and showed in the **"Load level"** field:

- The **"current level"** field; will show the same value of the **"load level"** field. (The "load level" can be set in the Management → Management of lift, menu).
- When the lift is in the loading position, in the bell-jar field the message **"LOAD LEVEL"** will appear.

Click the **STOP Lift/Shield** button key to stop the lift or the shield in a position other than the load/unload position.
Lifts' movement is allowed only within the **LIFT** menu.

Buttons:

- **LIFT A UP**: by means of this command the A side lift moves UP.
- **LIFT A DOWN:** by means of this command the A side lift moves DOWN.
- **LIFT B UP:** by means of this command the B side lift moves DOWN.
- **LIFT B DOWN**: by means of this command the B side lift moves DOWN.
- **SHIELD UP:** by means of this command the A side lift moves DOWN.
- **SHIELD DOWN:** by means of this command the A side lift moves DOWN.
- **STOP LIFT AND SHIELD:** by means of this command the lift or shield in movement STOPS.
- **SET LOAD LEVEL A:** set the A side lift loading/unloading level
- **SET LOAD LEVEL B:** set the B side lift loading/unloading level
- **CLOSE:** closes window but don't stop the lift/shield movement.

4.3 Error message of lift window

For safety purposes, if the opening consent is missing, it is not possible move the lift by the arrows. The lifts **CANNOT** be moved if:

- The quartz-guards are outside the table. The warning message **"LIFT A/B PORT/ QUARTZ GUARD SHIELD WARNING! Stop movements Lift!"** appears.
- The relevant lift door is opened. The warning message **"LIFT A/B PORT/ QUARTZ GUARD SHIELD WARNING! Stop movements Lift!"** appears.
- The shield is open. The warning message **"FRONT SHIELD OPEN WARNING!Stop Movements Lift! "** appears.
- There is vacuum between bell-jar o-rings. The warning message **"LIFT A INFO VACUUM BETWEEN O-RING! Stop Movements Lift!"** appears.
- The word LIFT is displayed in **red background** (bell –jar in PreH2 or PROCESS or POST H2 or POST N2 status).

Note:

- The two lifts and the shield **CANNOT** be moved simultaneously.
- If the lift is in movement and the lift door or the shield are manually forced to open, the lift motion will be stopped automatically and the warning message **LIFT A/B PORT/ QUARTZ GUARD SHIELD WARNING! Stop movements Lift !",** or **FRONT SHIELD OPEN WARNING!Stop Movements Lift!** appears.
- If the **LIFT** menu is quitted through the **CLOSE BUTTON**, lift movement will not be stopped. To stop lift movement, click **STOP Lift/Shield** red button on application buttons bar.

5 Alarms

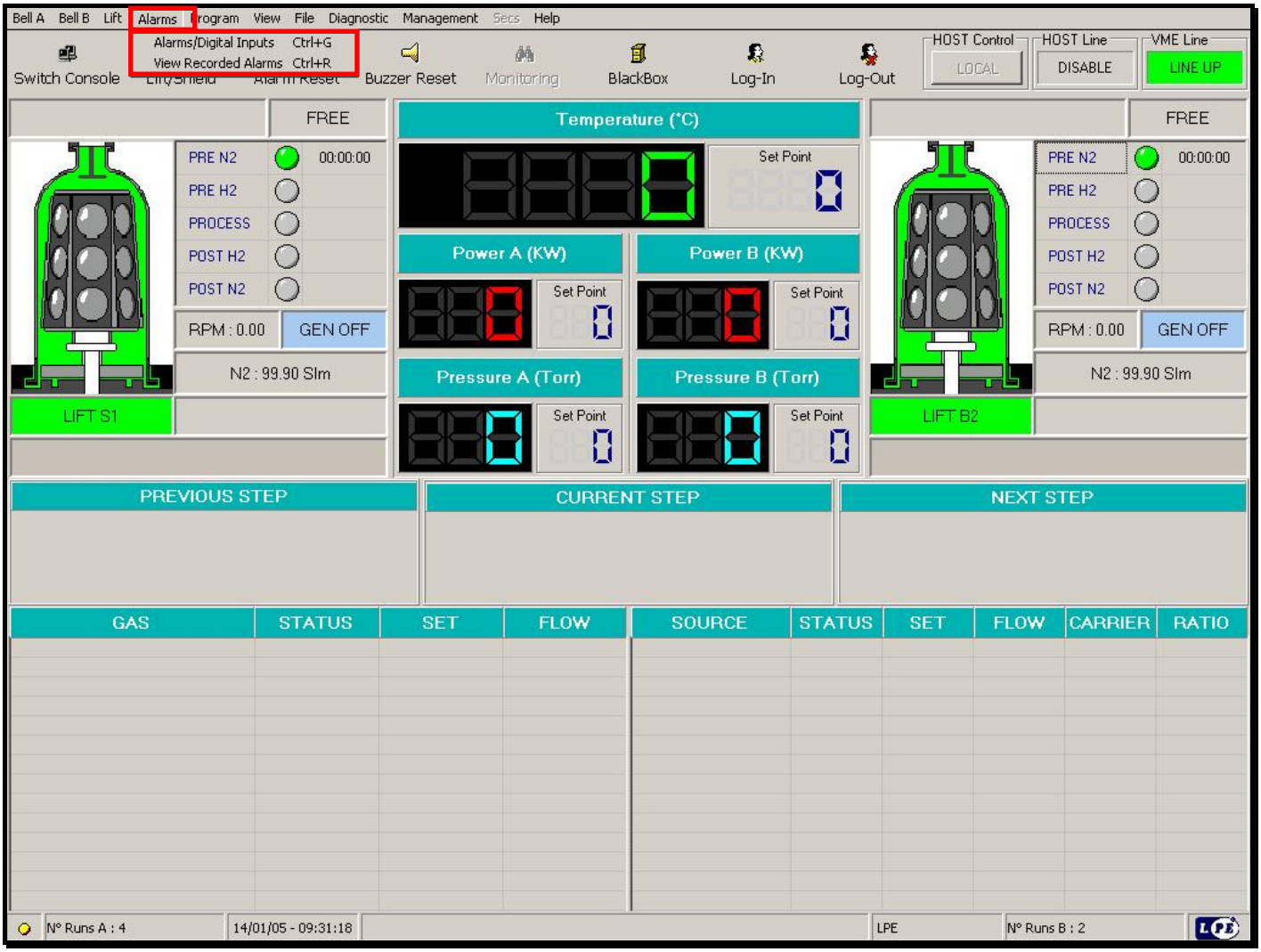

5.1 Access Level to Alarm menu

All users can access to this menu.

5.2 View Alarms

This window displays reactor alarm situation.
Beside each alarm, a color light and the alarm type is displayed:

GREEN LIGHT: relevant alarm is not present
RED LIGHT: relevant alarm is present
YELLOW LIGHT: relevant alarm is NOT activated on the reactor

5.3 View Recorded Alarms

Pressing Black Box Button on Main page or by the alarm menu, this window will appear.

The Black Box records the history of the reactor, saving EVENTS, ERRORS, ALARMS and COMMANDS. Each line is divided in fields that describe various aspects of the item.
The Black Box is just for visualization and there is no way to modify data inside.

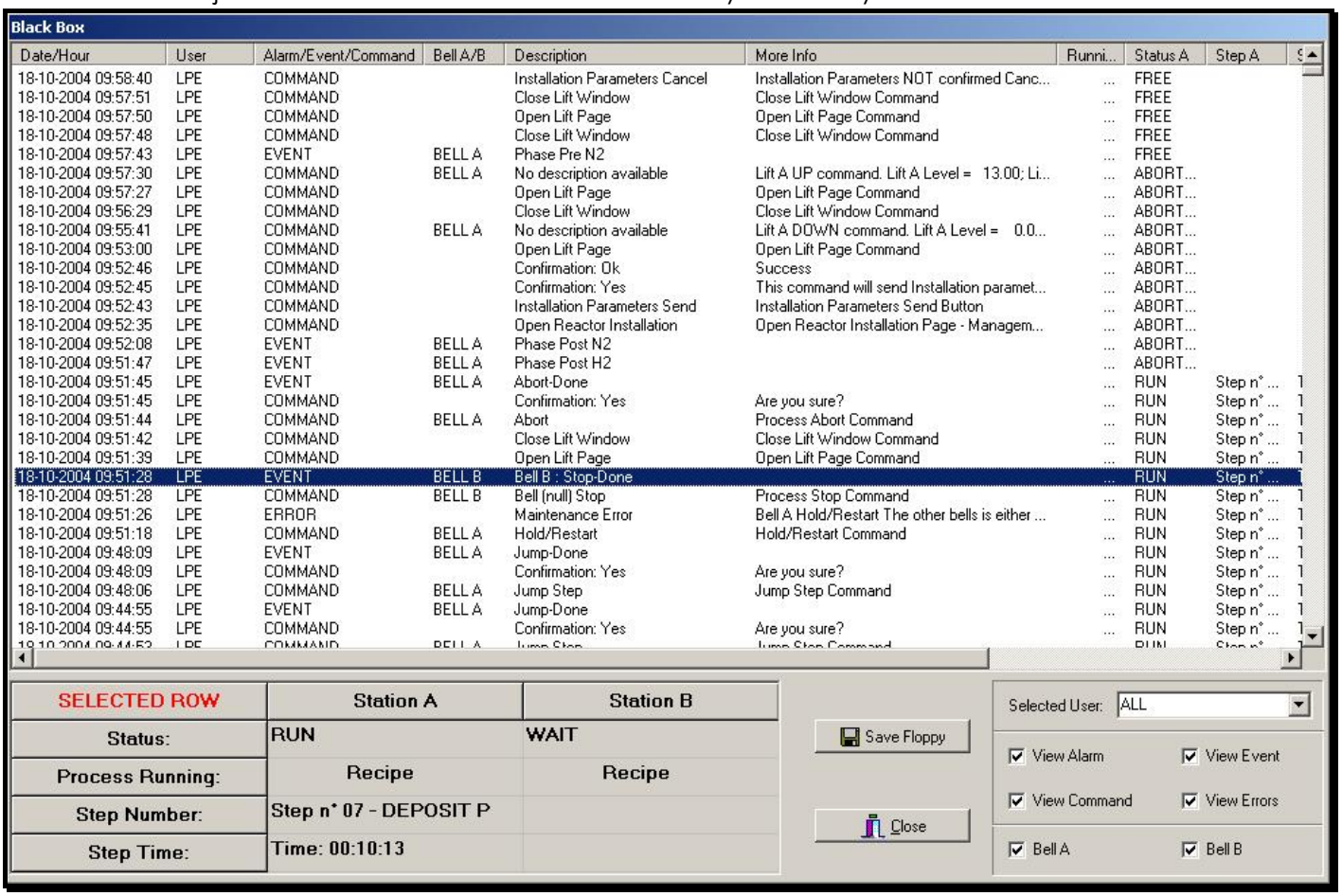

Buttons and check boxes:

- **Selected User:** this field allows the analyzer to display only lines written while a particular person was logged. The user selection is done by clicking two times with the mouse left button on the user name into the user column.

- **View *** checkboxes**: if a checkbox is checked, Black Box window will display all the lines belonging to that category. It's very useful is the Black Box analyzer wants to know, for example, only alarms.
- **Save (floppy):** allows the monthly black box file to be saved on an empty and formatted 1.44 MB 3,5" floppy disk. This command will create a .zip file named BlackBoxNN.zip, where NN stands for the current month set on GUI PC (for example BlackBox07.zip means the Black Box file of July. This shrinking feature allows Black Box file to grow almost without limitation, without loosing the possibility of recording files and studying them later somewhere else. To read BlackBoxNN.zip files on another PC, it is necessary to have WinZip (or similar programs) installed.

- **Close:** this command will close the window, without saving or modifying any data.

Column Descriptions:

- **Date/Hour:** it's the exact time in which what's described in the line happened.
- **User:** it's the user logged in. At the time, no user management is configured, so this field will be filled with the two values SYSTEM and ALL (that means unknown person).
- **Alarm/Event/Command:** this field describes the category of the line. Categories are four:

a) EVENTS: something modified the reactor state. For example, internal controller switched reactor from PREN2 to PREH2.
b) ERRORS: a wrong command has been given.
c) ALARMS: an alarm or a warning occurred on the reactor.
d) COMMANDS: a command has been given to the reactor.

- **Bell A/B:** highlight to which station the Alarm/Event/Command is related.
- **Description:** a brief, but exhaustive explanation**.**
- **More info:** here it is collected every information useful to better understands the reactor state when that line was written.
- **Running A/B: if** the Alarm/Event/Command happen during process the process name is collected.
- **Status A/B:** is the bell status once the Alarm/Event/Command happen.
- **Step A/B:** is the step on which the Alarm/Event/Command happen.
- **Step Time A/B:** is the time elapsed from the beginning of the step on which the Alarm/Event/Command happen.

5.4 ACTIONS AFTER AN ALARM

Regarding the type of an alarm, different actions can be performed.

Alarm types are:
- **TYPE " W "** (WARNING)
- **TYPE " H "** (HYDROGEN)
- **TYPE " N "** (NITROGEN)

Some safeties can be delayed.
This means that an action is activated only if a trouble has been occurring for a time exceeding a default value.

Intervention description:

TYPE " W " (WARNING)

If a W safety is activated, means that there is a reactor malfunctioning.
However this situation does not affect either wafers' quality or reactor integrity.
The fault is displayed and stored in the BLACK BOX.
Reactor buzzer gives out a continuous sound, but the reactor controller does not take any actions.
An "H" or "N" alarm may be activated after the Warning.
The "W" faults will not allow starting new processes.

TYPE " H " (HYDROGEN COOL DOWN)

If an H safety is activated, this means that there is a reactor malfunctioning, which could affect either, wafers quality or reactor integrity. Reactor controller acts as follows:

PREVIOUS STATUS	NEXT STATUS
PRE-PURGE N2	NO CHANGE
PRE-PURGE H2	PRE-PURGE N2
PROCESS	POST-PURGE H2
POST-PURGE H2	NO CHANGE
POST-PURGE N2	NO CHANGE

The RUN/WAIT status is ALWAYS disabled when present.
The alarm is stored in the BLACK BOX.
If an alarm regards one bell-jar only (i.e. FLOW-SWITCH SHUTTER PLATE B), the controller action will not affect the other bell-jar.
If an alarm affects both bell-jars (i.e. BLOWER MOTOR THERMAL SWITCH), the controller action will affect both bell-jars. Through View → View Alarms menu, it is possible to check if the alarm is still pending.

TYPE " N " (NITROGEN COOL DOWN)

If an N safety is activated, this means that there is a reactor malfunctioning, which could affect the reactor integrity.

In such a situation, the reactor computer moves both the bell-jars directly to POST-N2 status, skipping the H2 cool down post purges.
The alarm is stored in the BLACK BOX.

For the list of alarms, see chapter " **Reference on screen messages list and description".**

6 Program

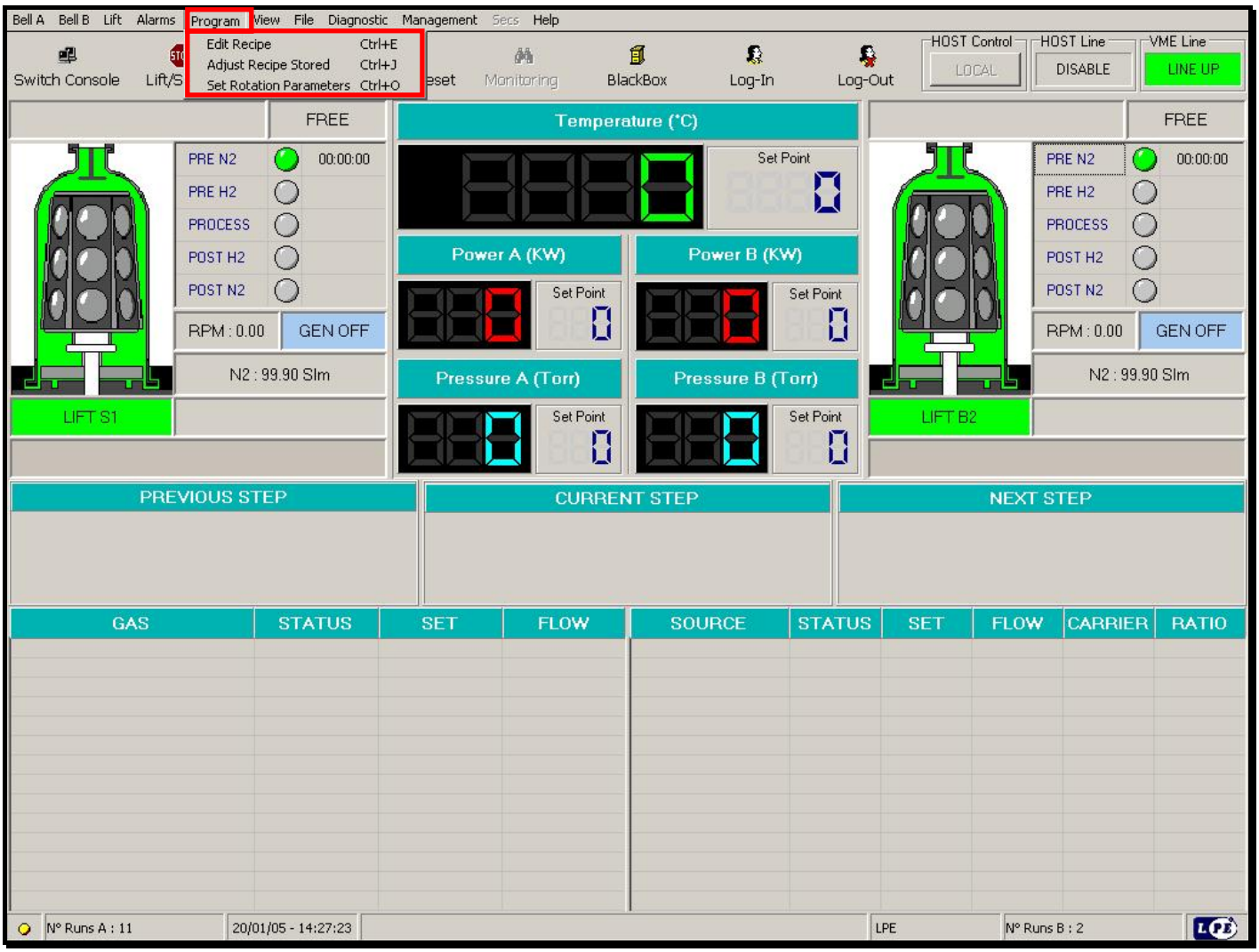

6.1 Access Level to Program menu

Users have different access to the Program menu according to the below Access list:

LPE Level1 = Full Access.
Supervisor Level 2 = Full Access.
Maintenance Level 3 = Full Access.
Programme Level 4 =Full Access.
User Level 5 = Access only to the Adjust Recipe Stored and to the Set Rotation Parameter windows.

6.2 Edit Recipe

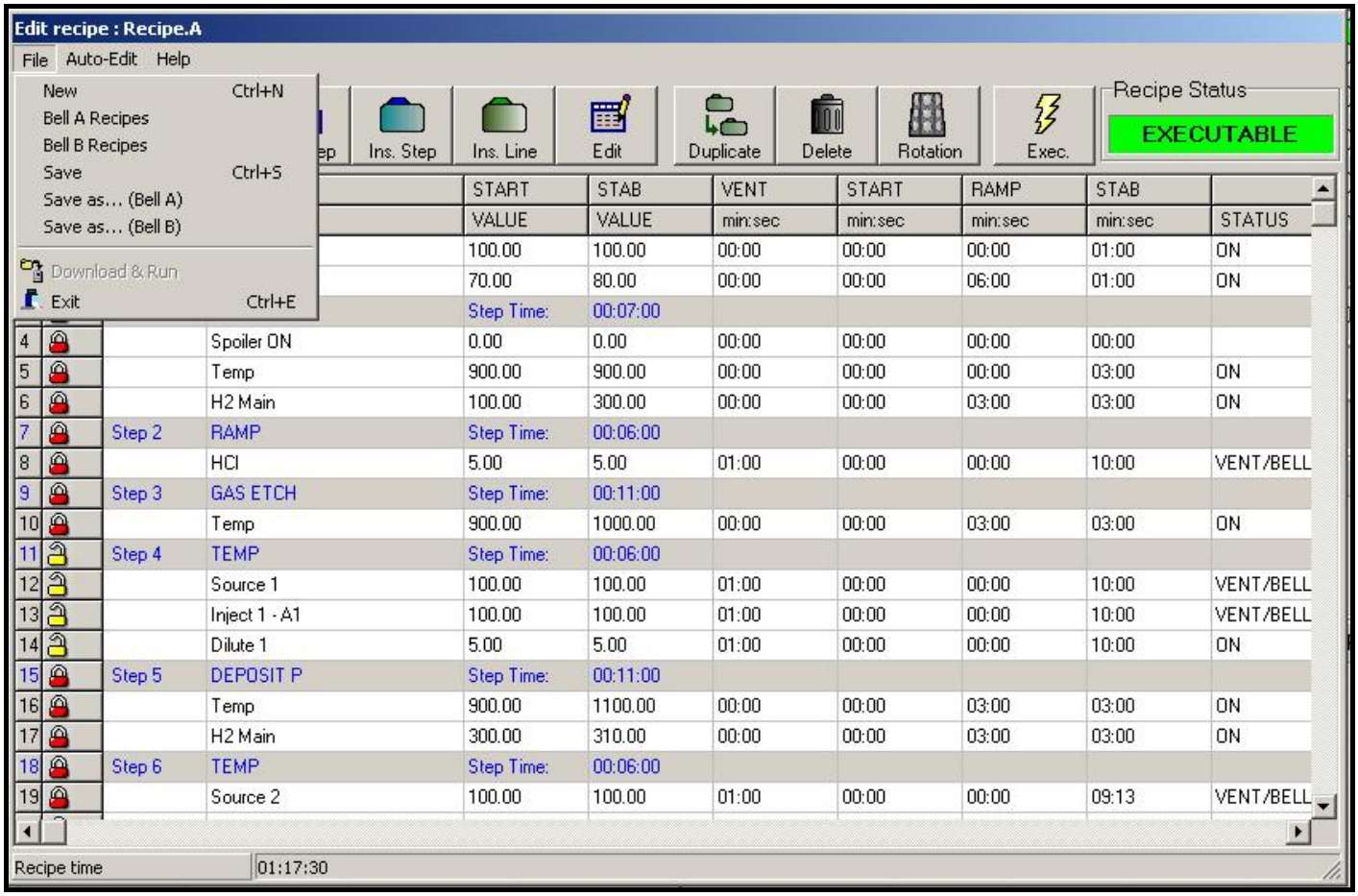

This command allows either creating a new recipe or modification an existing one.
The command was designed in this way to give maximum freedom and flexibility of use. Consequently, there are no limitations or strict rules except the following:

- There must be at least one H2 line
- It is not possible to set values outside the correct ranges provided for each function.
- It is not possible set the Stab Time to 0
- It is not possible set the Ramp Time to 0 once Start and Stab value differs.

The image shows the graphic editor main window. Editing of a new recipe is immediately available. The following zones can be found in this window:
Menu: Using the mouse, operator can gain access to one of the menu items. The functions associated to each menu item are as follows:

File

- **New:** it allows creating a new recipe.
- **Bell A recipes, Bell B Recipes:** they allow opening an existing recipe for bell A and B.
- **Save:** it allows saving the recipe currently on the screen.
- **Save as ... (Bell a), Save as ... (Bell b):** they allow saving the recipe currently on the screen with a specified name.
- **Exit:** to quit the graphic editor.

Auto-Edit

- **Intrinsic:** it allows creating a recipe to run an intrinsic test with or without gas etch.

- **Deposition:** it allows creating a recipe which can contain one gas etch step and up to three deposit steps.
- **Susceptor ETCH:** it allows creating a susceptor etch recipe with or without susceptor coating.

Help

- **Recipe Editing Manual:** it open the Recipe Editing Manual.

Control Buttons:

- **Padlock:** It lock/unlock a recipe to the User with Access Level only to Level 5.
- **Add Step:** it adds a new steps after the last one.
- **Insert Step:** it inserts a new step where the mouse pointer is located.
- **Insert Line:** it inserts a new line where the mouse pointer is located.
- **Edit:** it will open the Line' or the Step' Edit menu according to selection.
- **Duplicate:** it duplicates the line command.
- **Delete:** it deletes the line or the step according to selection.
- **Rotation:** it opens the rotation parameter window.
- **Executable:** it set the recipe as executable or not executable; the Run command in the Bell menus is only available on executable recipes.

All the above functions are available also by clicking with the right mouse button on the line or step to be edited.
The main functions associated to each menu item and buttons are described in the following chapters.

6.2.1 Recipe format

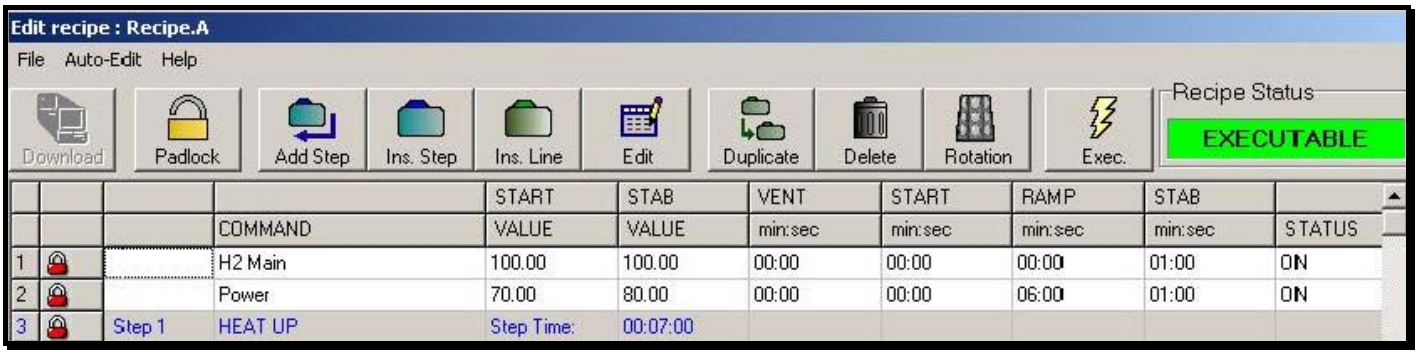

Every recipe line has the following format (note that time is expressed in minutes and seconds):

- 1st FIELD: **XX**
  This is the line number. In each step is reported the line number start counting from 1.
- 2nd FIELD: **XX**
  It shown if the line or the step is locked or not. In case the relevant line or step contains an error a red "X" appears. The error description appears below the recipe.
- 3rd FIELD: **XX**
  This is the step number.
- 4th FIELD: **COMMAND**
  This is the requested function or operation. It can identify a gas, a power command, a temperature command, and a pressure command.
- 5th FIELD **START value**
  This is the initial setting for the command.
- 6th FIELD: **STAB value**

This is the final setting for the command.

- 7th FIELD: **VENT time**
  This is the VENT time for the gas specified in the command field. After vent time (that can also be zero) the gas is moved to BELL.
  If the command switched is not a gas but power, temperature or pressure the VENT TIME field is not activated.
- 8th FIELD: **START time**
  The function specified in the COMMAND field will stay at the value specified in the START value field, for the time specified in the START time field.
  If the function specified in the COMMAND field is a gas, the START time is ALWAYS referred to the BELL status.
- 9th FIELD: **RAMP time**
  The function specified in the COMMAND field will go from the value specified in the START value field to the value specified in the STAB value field in the time specified in the RAMP time field.
  If the function specified in the COMMAND field is a gas, the RAMP time is ALWAYS referred to the BELL status.
- 10th FIELD: **STAB time**
  The function specified in the COMMAND field will stay at the value specified in the STAB value field for the time specified in the STAB time field.
  If the function specified in the COMMAND field is a gas, the STAB time is ALWAYS referred to the BELL status.
- 11th FIELD: **STATUS**
  ON: it means that the function is activated.
  Please note that the ON status is also assigned to the DOPE and DILUTE commands, yet both can have a VENT time.
  VENT: it means that the specified gas is ONLY flowing in VENT because START time, RAMP time, STAB time are all zero whereas the VENT time is not zero.
  VENT/BELL: it means that the specified gas is flowing both in VENT and in BELL because either START time, or RAMP time, or STAB time are not zero and in particular the VENT time is not zero.
  BELL: it means that the specified gas is ONLY flowing in BELL because either START time, or RAMP time, or STAB time are not zero whereas VENT time is zero.

6.2.2 Difference between line and step

STEP identifies different parts of the recipe. Each part of the recipe is a STEP.

Every step contains one or more LINES.

Each LINE contains one command relative to one function (gas, temperature, etc.).

All lines in a step will be executed simultaneously and must be all ended before the computer executes the next step.

Since the VENT, START, RAMP and STAB times can be independently set in each line, it is possible that a line ends before another line within the same step.

The computer assigns step number.

The computer also indicates the number of the first and of the last line included in the step.

IMPORTANT !!!

- Since START, RAMP and STAB times may differ among the various recipe lines, that some recipe lines might be completed before others in the SAME recipe step.
- Step numbers and line are automatically generated by the computer. The line numbers belong to the recipe step.

6.2.3 Settings of rotation parameter

Rotation parameters can be linked to a recipe. This feature can be very useful in case of a short deposition time since it allows process engineer to optimize rotation time for clockWise and counter-clockWise directions.

By clicking on Rotation button, the Rotation Parameters window appears:

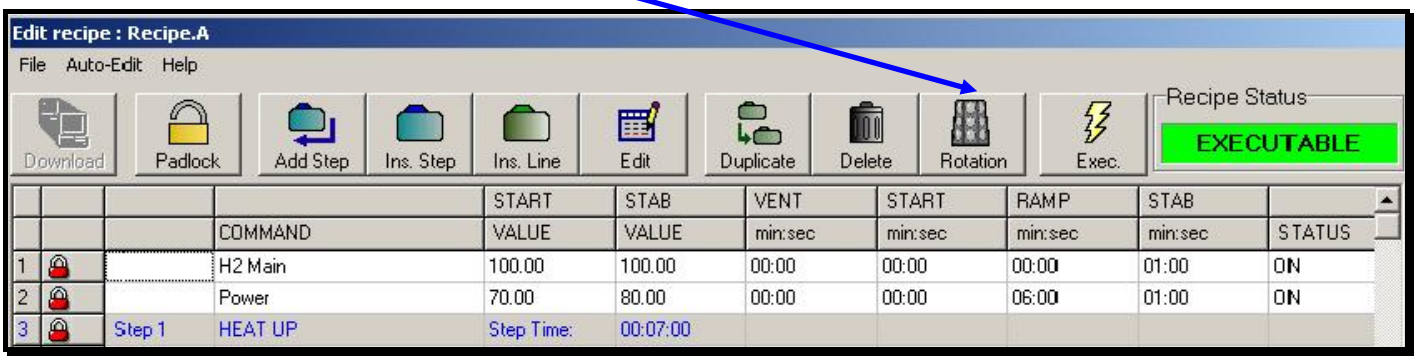

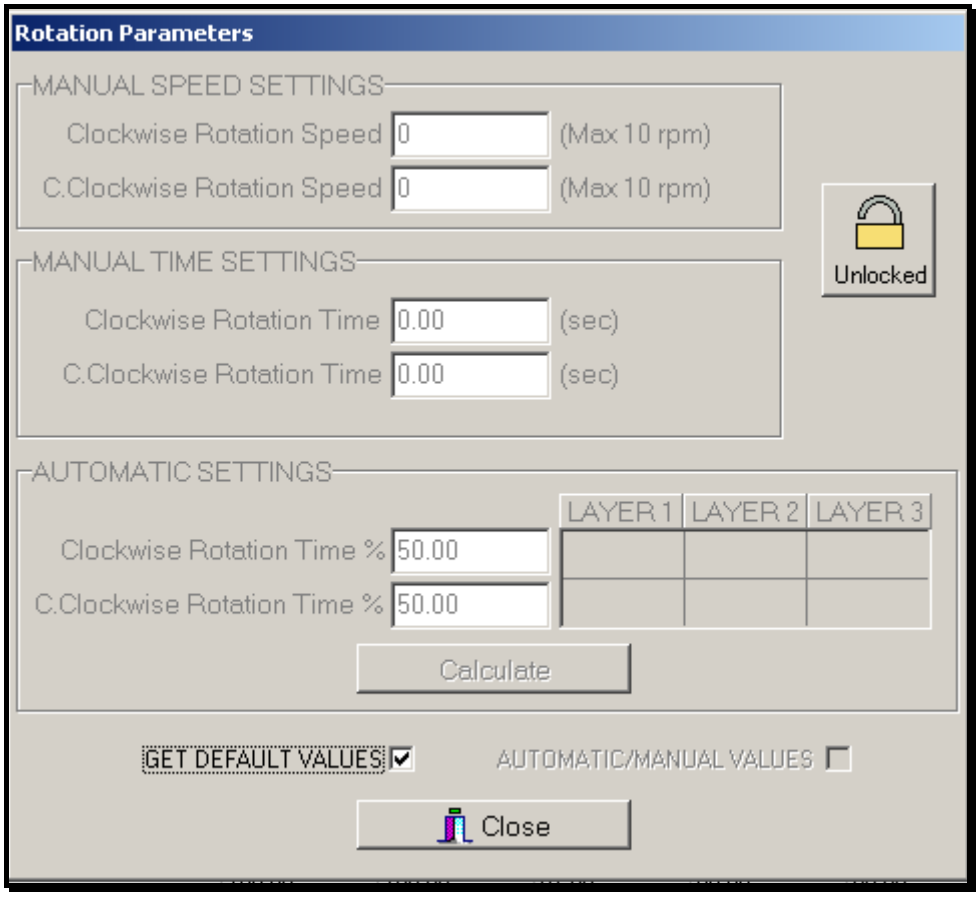

During process, susceptor will rotate in accordance with setting specified for the recipe.

IMPORTANT !!!

In the Management → Reactor Installation → Reactor Options window is possible set some options regarding the "Rotation Parameters "window.
If the "**Set Rotation Parameters"** option is equal to **ENABLE**:

- The Edit → Set Rotation Parameters window, where are stored the default rotation values for each recipe, is available.
- If a new recipe is going to be created, by pressing the rotation button, the Rotation Parameters window will be displayed staring with the **"get default values"** options available.
- If an already stored recipe is selected, by pressing the rotation button, the Rotation Parameters window will be displayed as saved in the previous recipe selection.
- If the check box **"get default values"** is selected the recipe will get the rotation parameter from the configuration file and the recipe will not have its own set of dedicated rotation values.
- All recipes will get rotation values from configuration file (Edit → Set Rotation Parameters window), unless specific settings have been assigned.

If the "**Set Rotation Parameter"** option is equal to **DISABLE**:

- The Edit → Set Rotation Parameters window, where are stored the default rotation values for each recipe, is not available.
- If a new recipe is going to be created, by pressing the rotation button, the Rotation Parameters window will be displayed staring with the automatic setting options available.
- If an already stored recipe is selected, by pressing the rotation button, the Rotation Parameters window will be displayed as saved in the previous recipe selection.
- The **"get default values"** option is not available.
- Each one of all recipes need to have settled is own Rotation Parameters window.

Manual setting

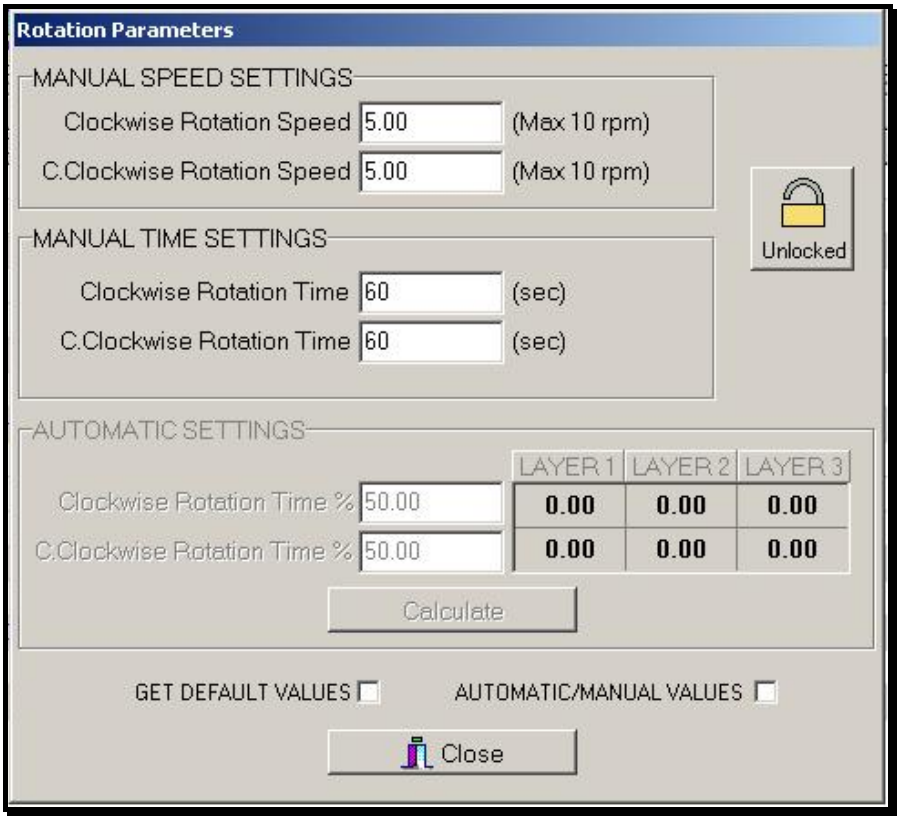

If check box **"get default value"** is not selected, the choice between **"manual"** and **"automating setting"** is available.
If there is not any flag on the **"automatic/manual setting"** field the **"manual"** setting is available.
In this menu, it is possible to set a rotation parameter for the current recipe, by entering:

- ClockWise and counterclockWise speed .
- ClockWise and counterclockWise time.

Lock icons:
LOCK / UNLOCK button allows to convert a MODIFIABLE rotation menu into a NOT MODIFIABLE rotation menu and vice versa.
A NOT MODIFIABLE rotation menu has the Lock icon closed.
A NOT MODIFIABLE rotation menu cannot be modified by the commands provided by options ADJUST RECIPE STORED (see PROGRAM menu) and ADJUST RECIPE RUNNING (see BELL A/B menu).
Note:

- ClockWise and C.ClockWise rotation **speed** and **time** must be different from **"0"**, otherwise the input will not be accepted and the following messages will be displayed:

- At any changes from **"automatic"** to **"manual"** mode or to **"default"** mode a confirmation will be required.

Automatic setting

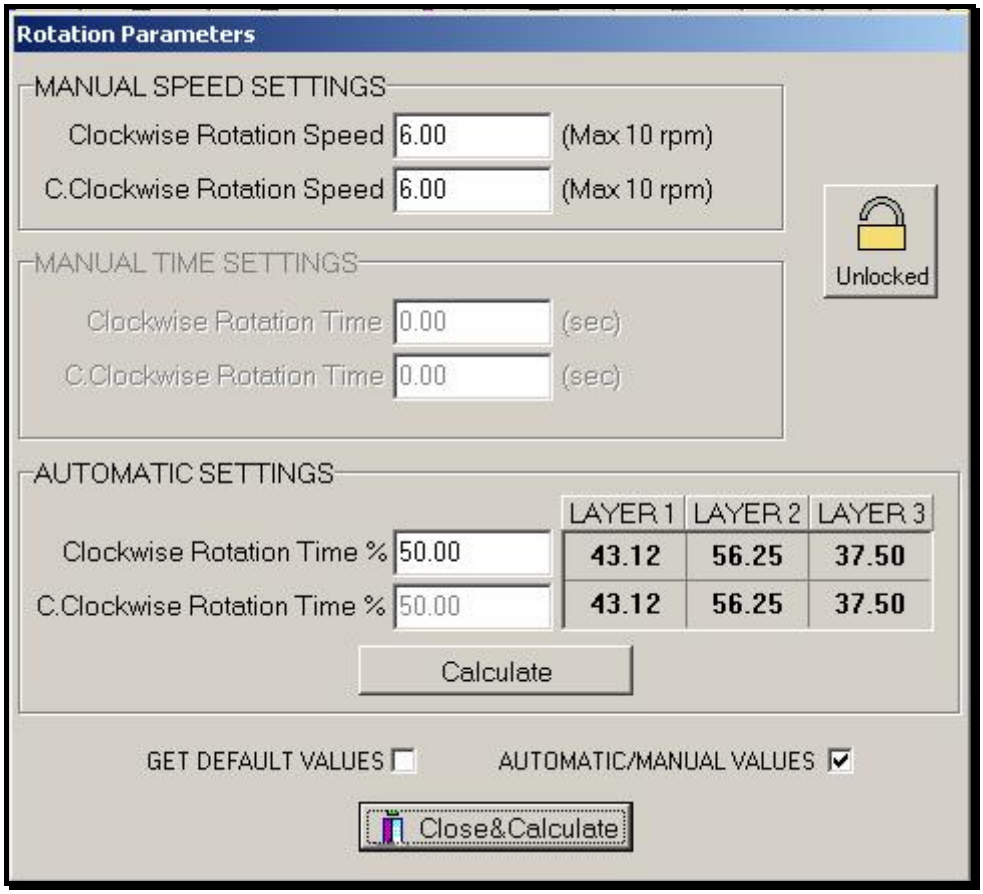

If check box **"automatic/manual setting"** is selected, automatic calculation of clockWise and counter clockWise time is available.

In this menu, it is possible to set rotation parameter for the current recipe, by entering:

- ClockWise and counter clockWise speed.
- Percentage of time that the susceptor rotate during the deposit clockWise. Counter clockWise percentage will be automatically calculated from the GUI considering that the addition between clockWise and c. clockWise must be equal to 100%. Example. : by inserting 60% on the clockWise percentage field the GUI will insert automatically 40% on the c. clockWise field.

By pressing the CALCULATE button, GUI will automatically calculate the inversion timing for every step containing a SOURX line.
The result of calculation is shown as follow:

- LAYER 1: shows the result of the first step of the recipe containing a SOURX line.
- LAYER 2: shows the result of the second step of the recipe containing a SOURX line.
- LAYER 3: shows the result of the third step of the recipe containing a SOURX line.

Note:

- By default the percentage of time is settled as **50 %** clockWise and **50 %** counterclockWise.
- At any change on the clockWise percentage field a confirmation will required.
- At any change from **"automating"** to **"manual"** or to **"default"** mode a confirmation will be required.
- If the recipe doesn't contain any SOURX line, the **"automatic setting"** will not be available.
- The result of the calculation must be from 25 sec to 59.99 sec. Any other result will not be accepted and the following message will be displayed.

- ClockWise and C.ClockWise rotation **time** must be different from **"0"**, otherwise the input will not be accepted and the following message will be displayed:

IMPORTANT !!!
For any modification performed on a recipe already existing and saved with the "automatic setting", regarding:

- **Deposition time.**
- **Number of SOURX line contained into the selected recipe.**

it is not necessary entering in the rotation menu, but at the command "save" or "save as.." the calculus will be performed automatically.

6.2.4 How automatic calculation works

- Consider a recipe with a SOURX line with a 10 minutes stab time.
- Set CLOCKWISE and C.CLOCKWISE ROTATION SPEED.
- Set CLOCKWISE and C.CLOCKWISE ROTATION TIME % at 50%.

By pressing CALCULATE button, SOURX stab time is divided by 50%.

50% of 10min → 5min CLOCKWISE
50% of 10min → 5min C.CLOCKWISE

The two times are divided by two until the result is from 25 to 759.99sec. If one or both results are out of this range, the calculation can't be performed and an error message will be displayed.

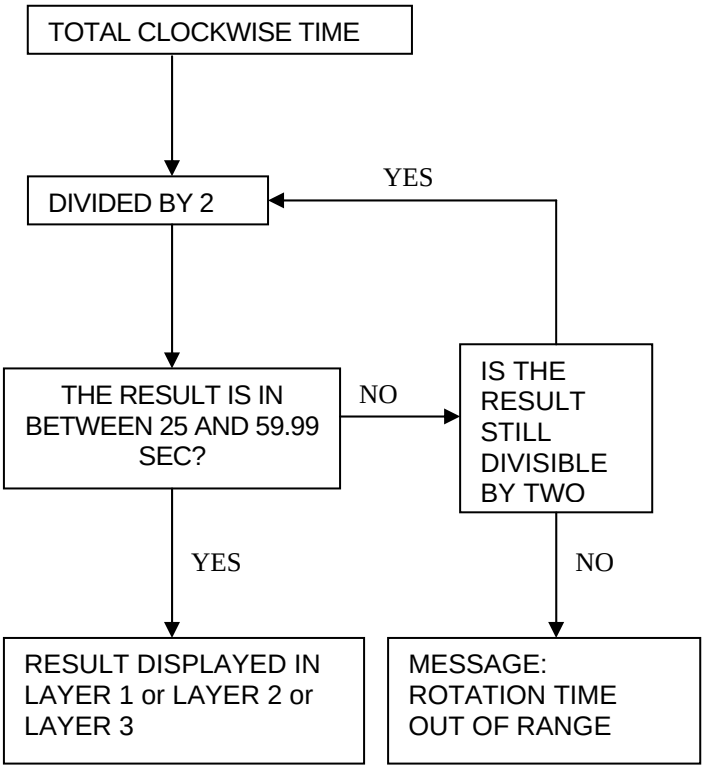

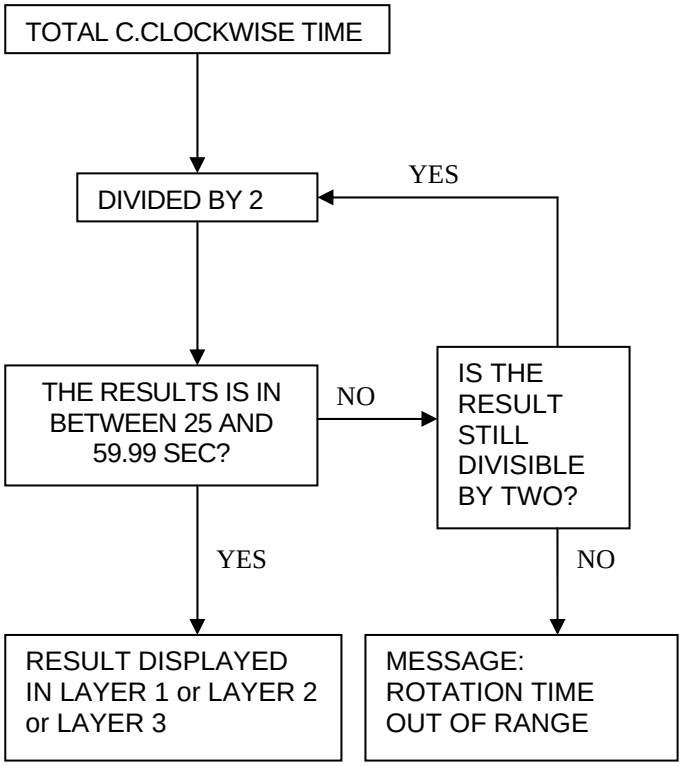

6.2.5 Automatic DOPE1/DOPE3 Or DOPE1/DOPE2 switch

With a particular gas panel configuration is possible associate two different kinds of dopants for Dope1 and for Dope3 or Dope1 and for Dope2.
The Management → Reactor Installation → Gas Panel →Smart Dopants field must be set as AVAILABLE.
When this option is available there are some difference in the normal way to edit the recipes and in the Diagnostic → Gas panel test window.
Each one of this differences are more deeply treat in the following chapters.

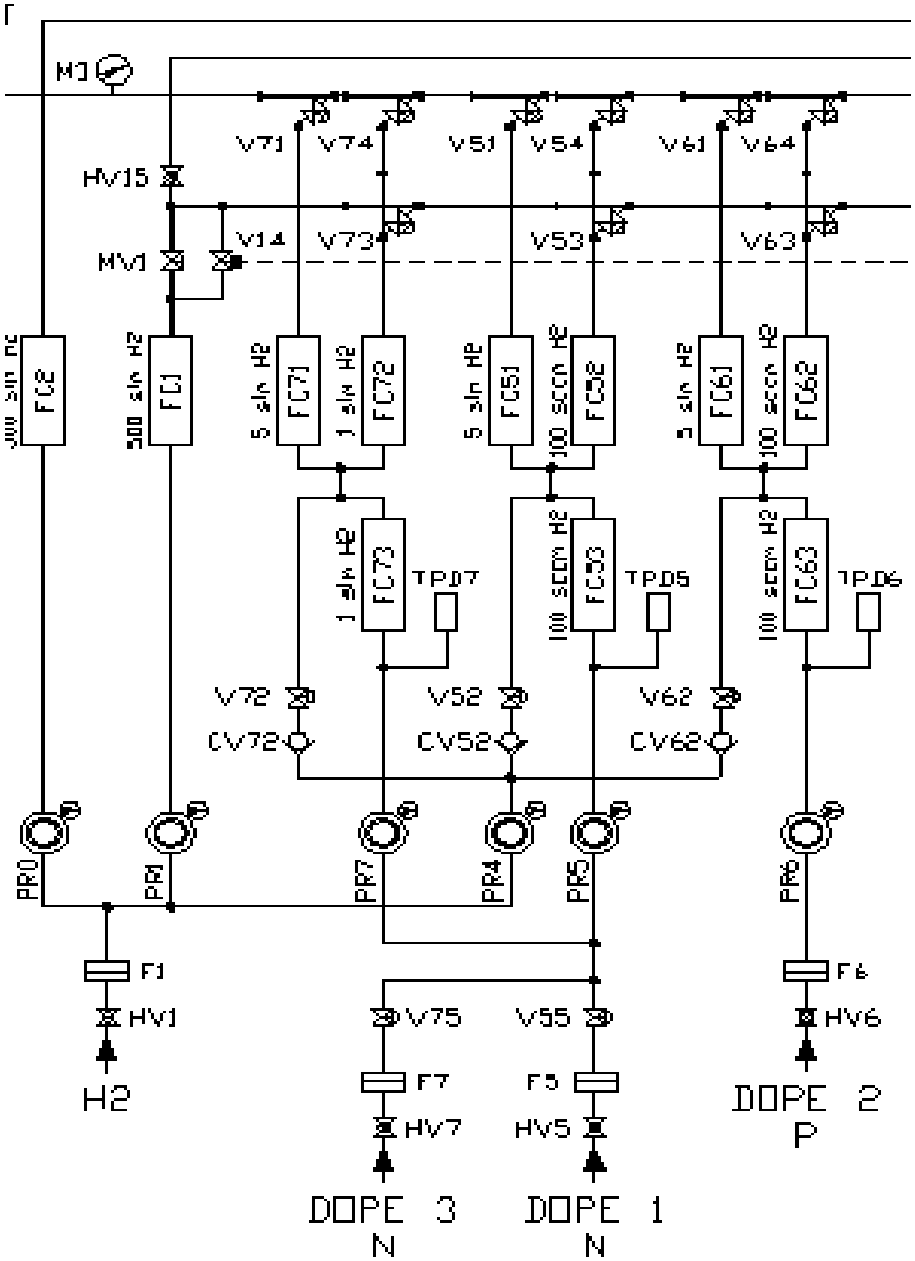

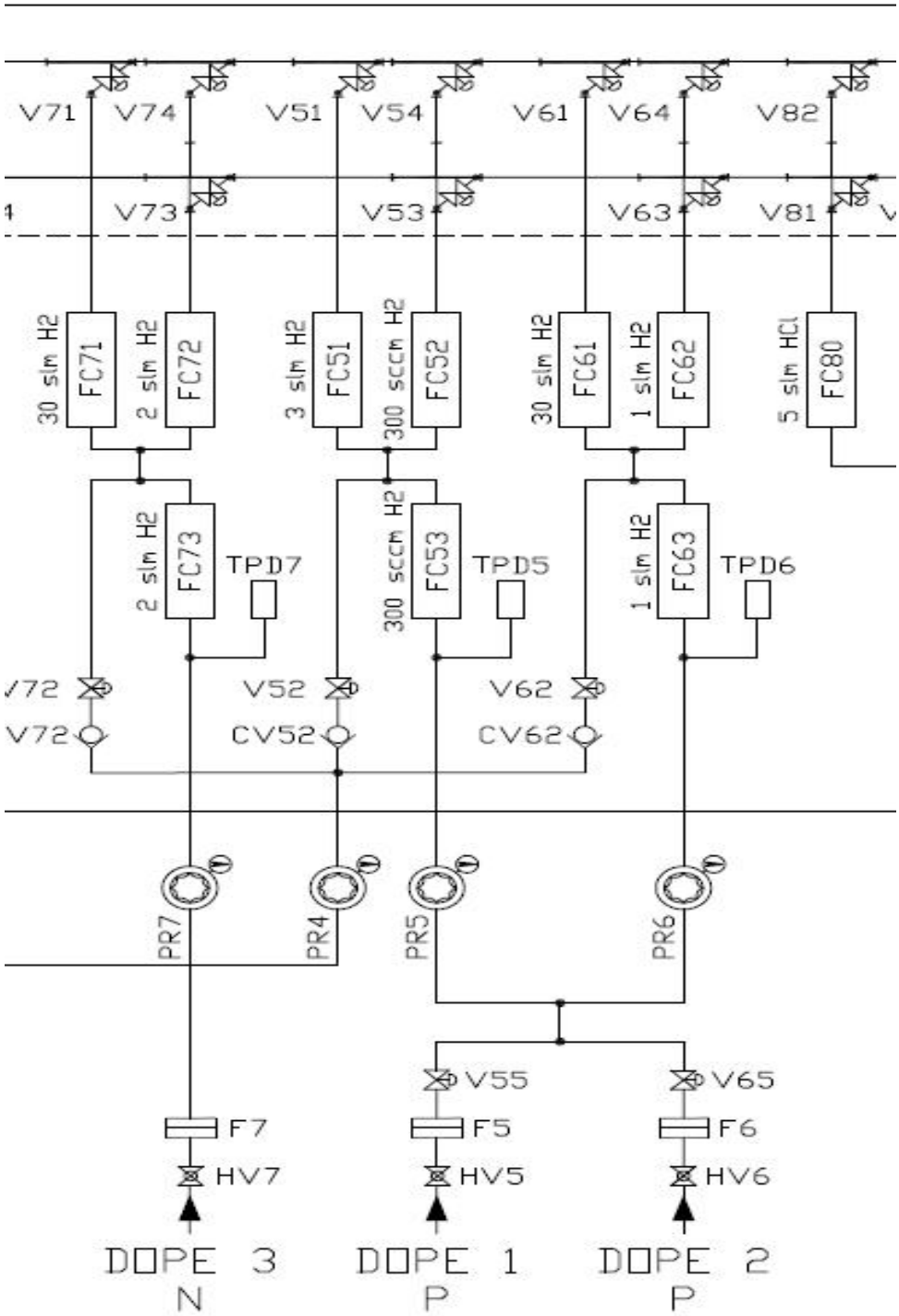
V71
V74
V51
V54
V61
V64
V82
V73
V53
V63
V81
30 slm H2
FC71
2 slm H2
FC72
3 slm H2
FC51
300 sccm H2
FC52
30 slm H2
FC61
1 slm H2
FC62
5 slm HCl
FC80
2 slm H2
FC73
TPD7
300 sccm H2
FC53
TPD5
1 slm H2
FC63
TPD6
V72
V52
V62
CV52
CV62
PR7
PR4
PR5
PR6
V55
V65
F7
F5
F6
HV7
HV5
HV6
DOPE 3
N
DOPE 1
P
DOPE 2
P

6.2.6 Automatic SOURX1/SOURX2 switch

In the full configuration Reactor (with 2 bubbler - one in TCS and one in TET - 2 Mass Flow Controller - FC21 and FC22 - 2 valves use to change the source gas - V90 NO and V91 NC), during the editing of the TEMP line, if the **set point** is:

- **=/> "Automatic SOURX1/SOURX2 switch temperature",** then V91 and V90 valves are triggered. The two FC 22 and FC21 Mass Flow Controllers are connected only to TET source.

- **< "Automatic SOURX1/SOURX2 switch temperature",** then V91 and V90 valves are not triggered. FC22 Mass Flow Controller is in TCS and FC21 Mass Flow Controller is in TET

The "Automatic SOURX1 / SOURX2 switch temperature" is settled in the Management → Reactor Configuration → Parameters, menu.

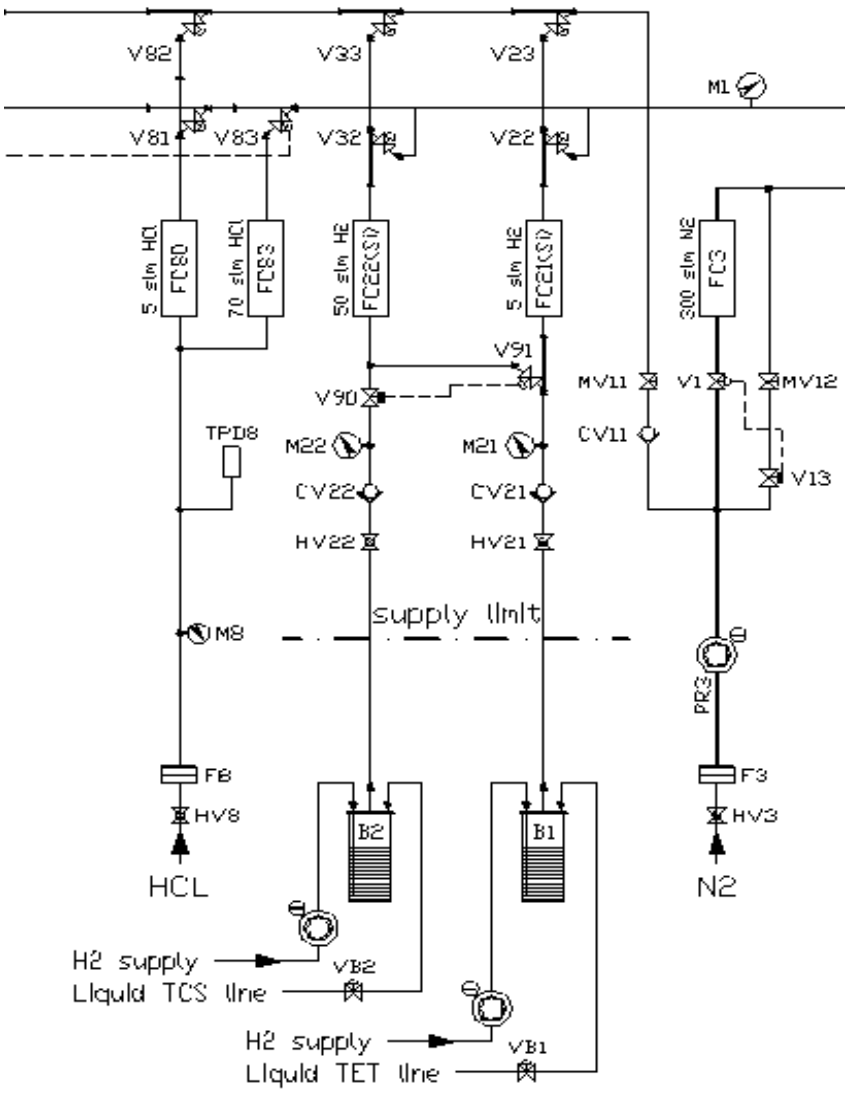

6.3 Creating a new recipe

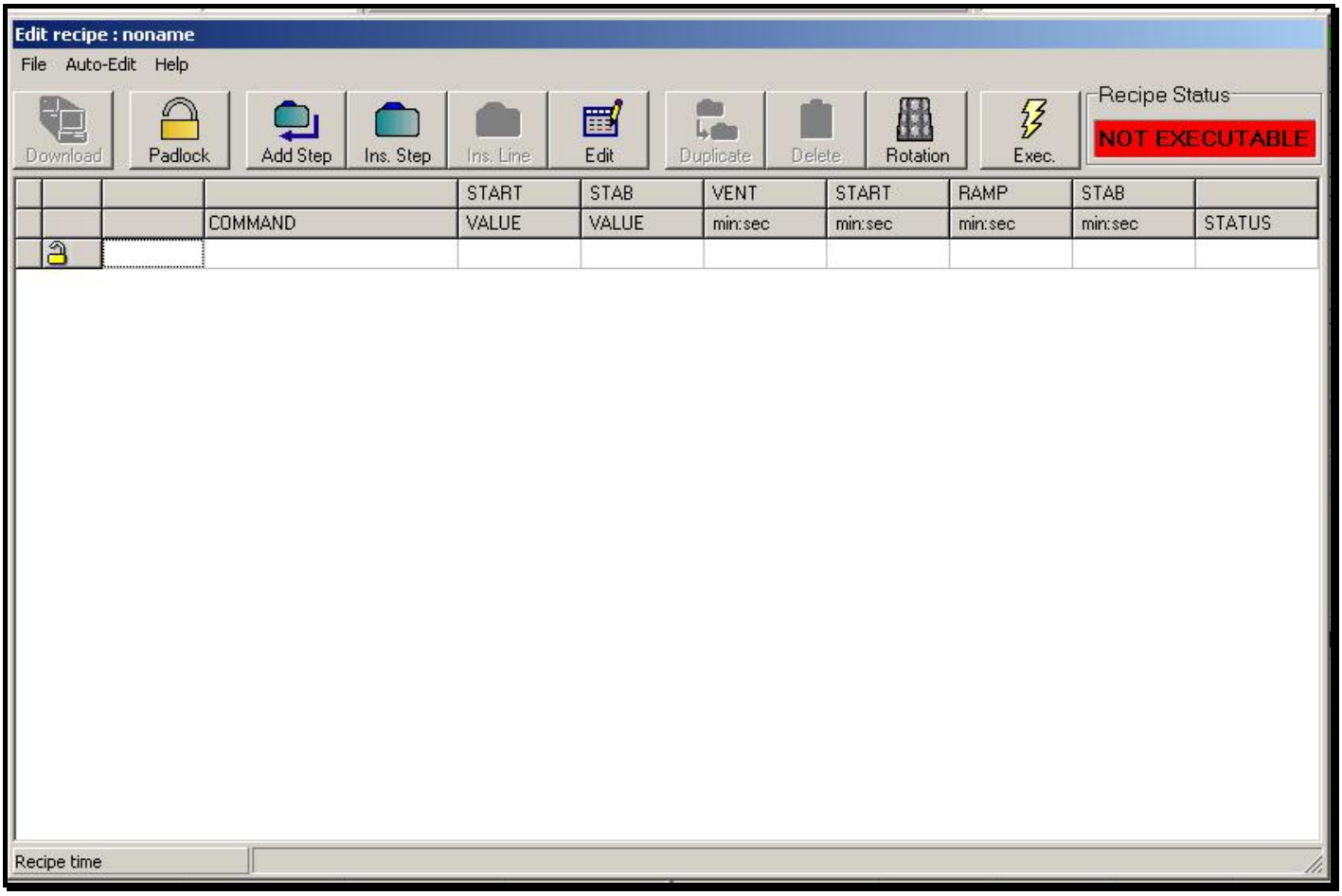

The quickest and easiest way to create a new recipe is through the AUTO EDIT command. We suggest using this command when building a new recipe.
A name must be chosen for the new recipe.
A new recipe can be also created by editing all the steps; recipe editor environment allows inserting, modifying delete and moving the lines of the recipe.
The available commands are described as follows:

1. Enter a new STEP
   A new step can be inserted in two ways:
   a. to insert a new STEP at the end of the recipe press the **ADD STEP** button.
   b. to insert a new STEP before an existing one, select with mouse pointer the line after which the STEP should be inserted and then press **INSERT STEP** button.
   In any case, the following input screen form is displayed.

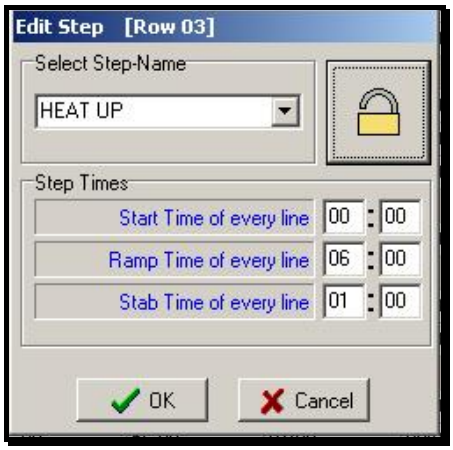

A STEP name is required (max 20 character length); the STEP name can be chosen among those displayed or typed in the input field.

Note:
The time in this window can be entered in minute and second or in tenth of minute depending on the selection done in the Management → Reactor Installation → Reactor Options→ Time Mode window.
In the recipe all the times values are always displayed in minute and second whatever is the entering mode selected.

2. Modifying an existing **STEP**
   Select
   a. STEP name modification is made by entering the new name into the input field.
   b. Start Time, Ramp Time and Stab Time; this option allows modifying time at once in every line of the step. The input format can be minutes and seconds or minutes and tenth of minute, according with the related configuration parameter (see Chapter "Management").
   c. Lock / Unlock the step by simply clicking on the lock icon.
3. Insert **LINE**
   A new line can be inserted in two ways:
   a. to insert a new LINE before an existing one, select with mouse pointer the line before which the LINE should be inserted and then press **INSERT LINE** button.
   b. to insert a new LINE after an existing one, select with mouse pointer the line after which the STEP should be inserted and then press **INSERT LINE** button.

In any case the insert LINE input screen form is displayed.
Choose command and enter the requested values for START VALUE, STAB VALUE, VENT TIME, START TIME, STAB TIME e RAMP TIME (when available); the new LINE is inserted in the desired position in the recipe.

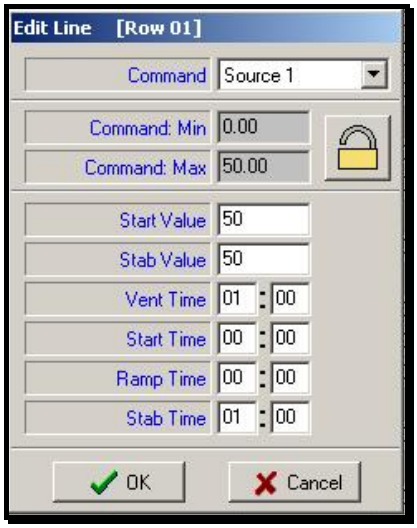

Note:
The time in this window can be entered in minute and second or in tenth of minute depending on the selection done in the Management → Reactor Installation → Reactor Options→ Time Mode window.
In the recipe all the times values are always displayed in minute and second *whatever* is the entering mode selected.

Available line commands: The box menu allows choosing the following commands:

- HYDROGEN
- SOURCE 1
- SOURCE 2
- SOURCE 3
- DOPE 1
- DOPE 2
- DOPE 3
- DILUTE 1
- DILUTE 2
- DILUTE 3
- INJECT 1
- INJECT 2
- INJECT 3
- HCl
- SPOILER ON (Moves the spoiler in order to divert cooling air flow to bell-jar in process).
- PRESSURE
- POWER (Power set point to the generator).
- TEMPERATURE (Temperature set point).
- HCl FAST
- HCl FC85
- H2 FC17

IMPORTANT !!!
If is available the "**Automatic DOPE1/DOPE3 switch"** options, (see "Automatic DOPE1/DOPE3 switch" chapter for more reference) will be a difference on the way to command the INJECT1 and the INJECT3. Instead of one single command there will be two different line for each INJECT and the available line command will be modified as below:

- HYDROGEN
- SOURCE 1
- SOURCE 2
- SOURCE 3
- DOPE 1
- DOPE 2
- DOPE 3
- DILUTE 1
- DILUTE 2
- DILUTE 3
- INJECT 1-DopeA
- INJECT 1-DopeB
- INJECT 2
- INJECT 3-DopeA
- INJECT 3-DopeB
- HCl
- SPOILER ON (Moves the spoiler in order to divert cooling air flow to bell-jar in process)
- PRESSURE
- POWER (Power set point to the generator)
- TEMPERATURE (Temperature set point)
- HCl FAST
- HCl FC85
- H2 FC17

Note that "DopeA" and "DopeB" is only an example and the name of the two dopants can be configured in the Management → Reactor Configuration → Gas Panel → Dope Switching menu.

If is available the "**Automatic DOPE1/DOPE2 switch"** options, (see "Automatic DOPE1/DOPE2 switch" chapter for more reference) will be a difference on the way to command the INJECT1 and the INJECT2. Instead of one single command there will be two different line for each INJECT and the available line command will be modified as below:

- HYDROGEN
- SOURCE 1
- SOURCE 2
- SOURCE 3
- DOPE 1
- DOPE 2
- DOPE 3
- DILUTE 1
- DILUTE 2
- DILUTE 3
- INJECT 1-DopeA
- INJECT 1-DopeB
- INJECT 2-DopeA
- INJECT 2-DopeB

- INJECT 3
- HCl
- SPOILER ON (Moves the spoiler in order to divert cooling air flow to bell-jar in process)
- PRESSURE
- POWER (Power set point to the generator)
- TEMPERATURE (Temperature set point)
- HCl FAST
- HCl FC85
- H2 FC17

Note that "DopeA" and "DopeB" is only an example and the name of the two dopants can be configured in the Management → Reactor Configuration → Gas Panel → Dope Switching menu.

6.3.1 Spoiler ON

The **SPOILER ON** command, has neither set-point nor time to enter.

It directs the maximum air flow to the chamber actually in process in order to cool the bell-jar quartz.

If there is no SPOILER ON command, the spoiler will remain in the mid position and will never direct the maximum air flow to the bell-jar in process.

It is recommended to use the SPOILER ON command during the deposition when the SOURCE command is ON.

It is recommended not to use the SPOILER ON command in case of susceptor etching.

6.3.2 Spoiler OFF

The **SPOILER OFF** command, has neither set-point nor time to enter.

It directs a small air flow to the chamber actually in process in order to keep hot the bell-jar quartz.

If there is no SPOILER OFF command, the spoiler will remain in the mid position and will never direct the maximum air flow to the bell-jar in process.

It is recommended not to use the SPOILER OFF command in case of susceptor etching.

It is no possible use the SPOILER OFF command during the deposition when the SOURCE command is ON.

IMPORTANT!!

The SPOILER OFF command can be used only modifying the spoiler closing point. It is necessary leave 15 mm (0.6 inch) of opening when the spoiler is in the close position.
The SPOILER OFF command is not available as default. It must be enabled from the Management→Reactor Installation menu.

Managing the SUSCEPTOR ETCH:

SUSCEPTOR ETCH has two different function modes, depending on gas panel HCL line configuration:

BY-PASS MODE:

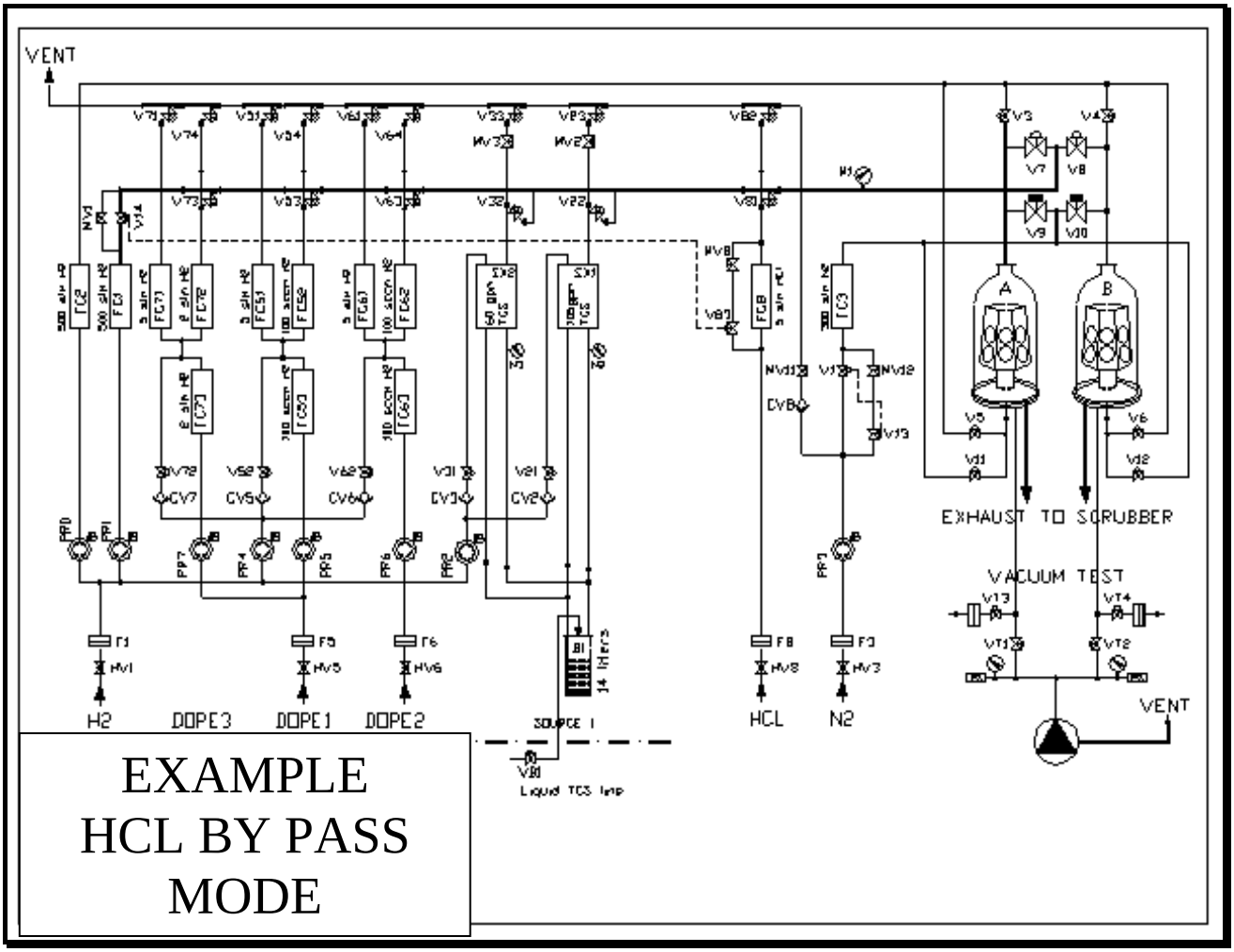

With this gas panel configuration in order to create a susceptor etch recipe:

- Insert the H2 command line.
- Set H2 flow to 10 % of MFC max flow.
- Insert HCl command line (HCl set point is not important).

When Hydrogen set point is 10% of MFC max flow (example: 40 SLM if MFC range is up to 400 SLM) and HCl is on, the HCl by-pass valve (MV 8) for high flow will be automatically activated.

IMPORTANT !!!

With this configuration the **"HCL Fast"** option must be set as NOT AVAILABLE in the Management → Reactor Installation → Reactor Options → HCL fast, menu.

HCl FAST MFC MODE:

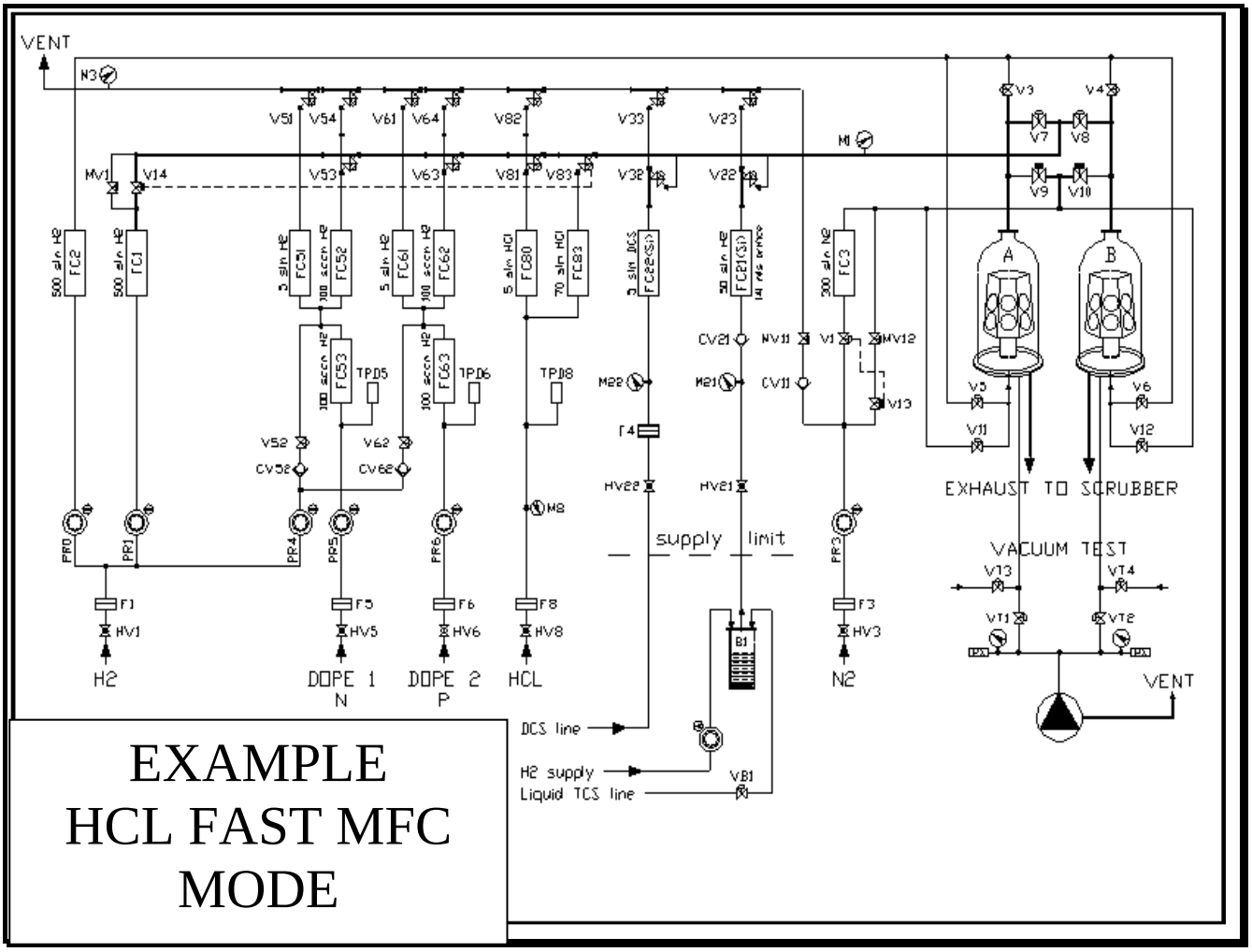

With this gas panel configuration in order to create a susceptor etch recipe:

- It is not necessary any particular set of the H2 flow.
- The HCL Fast has is own command line.

IMPORTANT !!!

With this configuration the **"HCL Fast"** option must be set as AVAILABLE in the Management → Reactor Installation → Reactor Options → HCL fast, menu.

Managing DOPANTS:

For standard use, insert only the INJECT line and the DILUTE line.
If the INJECT command has a VENT and BELL time and the DILUTE has to be on for the same duration, it is required to set the VENT and BELL time for the DILUTE too.
(This operation is automatically performed through the AUTO EDIT option).

WARNING !!!

The INJECT and DILUTE are two independent commands and the proper VENT / BELL time must be set, otherwise one of the two could go off before the other.

Managing a PURGE recipe with 2061S reactor:

After a long period with out using the reactor it may be necessary purge the gas panel line (as Silicon, dope, hcl), trough the vent, in order to re-conditioning the gas line. The fastest way is make a recipe that contains all the line that need to be purged commanded trough vent line.
If the recipe not contains any POWER line command in the first step, the 2061S reactor will not performs automatically the pre heating during the PRE H2 status.

More in general terms:

- In order to activate a dopant the INJECT line must be inserted.
- If no DOPE line is inserted, the computer will give the same set point as INJECT to the DOPE flow controller.
- If a DOPE line is inserted, the relevant set point will be given to the DOPE flow controller though other than the INJECT flow controller. Be careful with the VENT and BELL time for the DOPE, they must be set in accordance to the INJECT settings. However when the INJECT command goes off it will shut off the DOPE too.
- If the total time (VENT+BELL) assigned to the DOPE commands is shorter than the total time given to the INJECT command, the DOPE will receive the same set point as INJ for the remaining time.
- If no set point is given to the DILUTE line, no dilution will be used.

4. Modify an existing LINE

   Double click to the line to be modified .It is also possible select it and press the ***edit*** button or select it and press the right mouse button and then select edit. The modifications are made by entering the data in a screen form similar to that one used for Insert Line.

5. Delete STEPS and LINES

   Select the line or the step which should be deleted and click on the ***Delete*** button. It is also possible select it and press the right mouse button and then select ***Delete row***.

6.3.3 Save recipe time with the "Vent Function"

It's possible save precious recipe minutes utilizing the "Vent Function".

In a standard recipe the Vent command it's always included in the same line than the Bell command, to purge the gas panel piping with gases as Chlorosilanes, HCL & Dopants.

A standard recipe is done as follow :

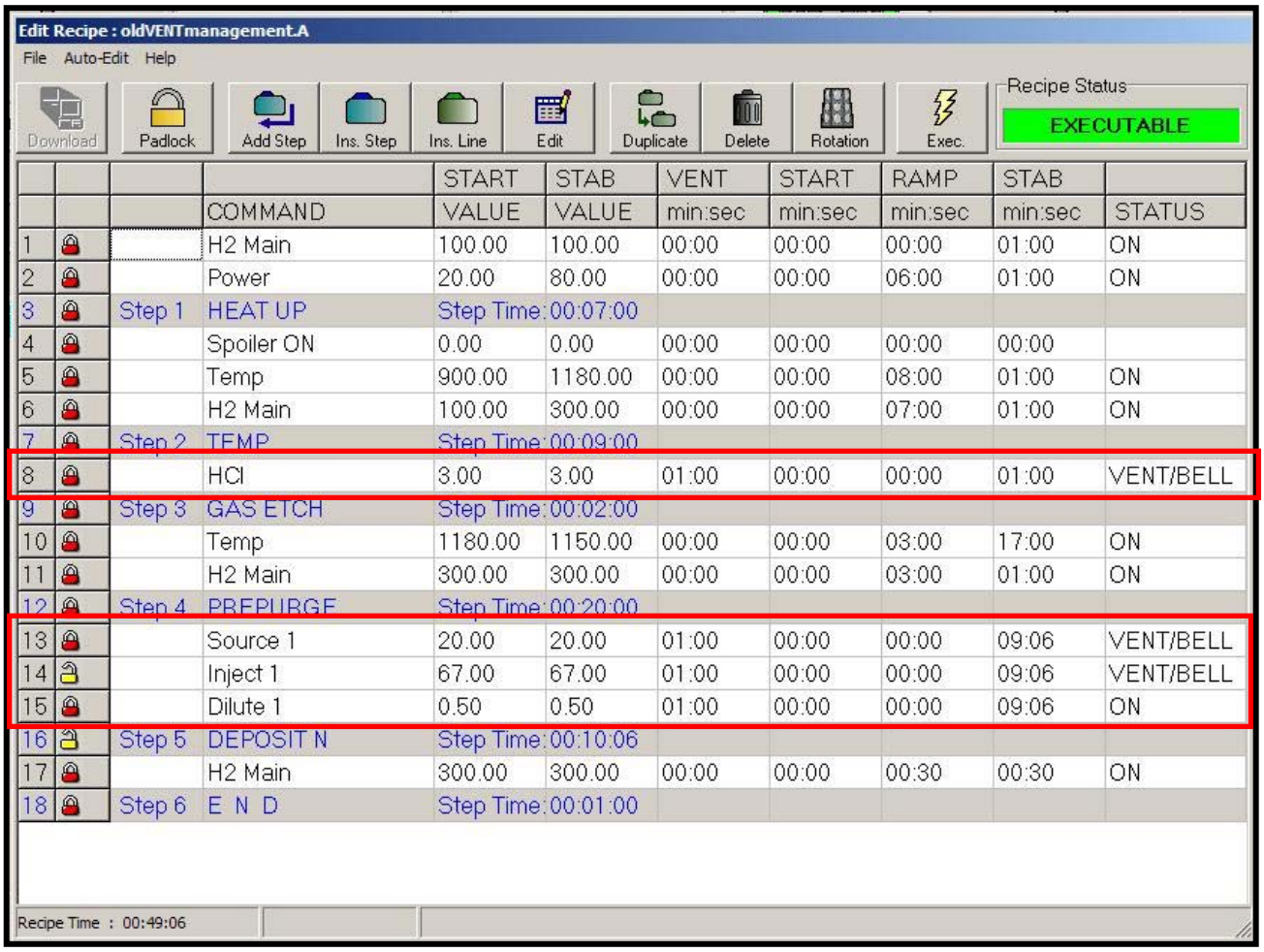

			COMMAND	START VALUE	STAB VALUE	VENT min:sec	START min:sec	RAMP min:sec	STAB min:sec	STATUS
1			H2 Main	100.00	100.00	00:00	00:00	00:00	01:00	ON
2			Power	20.00	80.00	00:00	00:00	06:00	01:00	ON
3		Step 1	HEAT UP	Step Time:	00:07:00					
4			Spoiler ON	0.00	0.00	00:00	00:00	00:00	00:00	
5			Temp	900.00	1180.00	00:00	00:00	08:00	01:00	ON
6			H2 Main	100.00	300.00	00:00	00:00	07:00	01:00	ON
7		Step 2	TEMP	Step Time:	00:09:00					
8			HCl	3.00	3.00	01:00	00:00	00:00	01:00	VENT/BELL
9		Step 3	GAS ETCH	Step Time:	00:02:00					
10			Temp	1180.00	1150.00	00:00	00:00	03:00	17:00	ON
11			H2 Main	300.00	300.00	00:00	00:00	03:00	01:00	ON
12		Step 4	PREPURGE	Step Time:	00:20:00					
13			Source 1	20.00	20.00	01:00	00:00	00:00	09:06	VENT/BELL
14			Inject 1	67.00	67.00	01:00	00:00	00:00	09:06	VENT/BELL
15			Dilute 1	0.50	0.50	01:00	00:00	00:00	09:06	ON
16		Step 5	DEPOSIT N	Step Time:	00:10:06					
17			H2 Main	300.00	300.00	00:00	00:00	00:30	00:30	ON
18		Step 6	E N D	Step Time:	00:01:00					

Total recipe time **49 minutes and 06 seconds**.

Using the "Save Vent" function the same recipe will be done as follow:

Edit Recipe : newVENTmanagement.A

File Auto-Edit Help

Download | Padlock | Add Step | Ins. Step | Ins. Line | Edit | Duplicate | Delete | Rotation | Exec.

Recipe Status: EXECUTABLE

				START	STAB	VENT	START	RAMP	STAB	
			COMMAND	VALUE	VALUE	min:sec	min:sec	min:sec	min:sec	STATUS
4			Spoiler ON	0.00	0.00	00:00	00:00	00:00	00:00	
5			Temp	900.00	1180.00	00:00	00:00	08:00	01:00	ON
6			H2 Main	100.00	300.00	00:00	00:00	07:00	01:00	ON
7			HCl	3.00	3.00	01:00	00:00	00:00	00:00	VENT
8		Step 2	TEMP	Step Time:	00:09:00					
9			HCl	3.00	3.00	00:00	00:00	00:00	01:00	BELL
10		Step 3	GAS ETCH	Step Time:	00:01:00					
11			Temp	1180.00	1150.00	00:00	00:00	03:00	17:00	ON
12			H2 Main	300.00	300.00	00:00	00:00	03:00	01:00	ON
13			Source 1	20.00	20.00	01:00	00:00	00:00	00:00	VENT
14			Inject 1	67.00	67.00	01:00	00:00	00:00	00:00	VENT
15			Dilute 1	0.50	0.50	01:00	00:00	00:00	00:00	ON
16		Step 4	PREPURGE	Step Time:	00:20:00					
17			Source 1	20.00	20.00	00:00	00:00	00:00	09:06	BELL
18			Inject 1	67.00	67.00	00:00	00:00	00:00	09:06	BELL
19			Dilute 1	0.50	0.50	00:00	00:00	00:00	09:06	ON
20		Step 5	DEPOSIT N	Step Time:	00:09:06					
21			H2 Main	300.00	300.00	00:00	00:00	00:30	00:30	ON
22		Step 6	E N D	Step Time:	00:01:00					

Recipe Time : 00:47:06

Total recipe time 47 minutes and 06 seconds.

6.3.4 How to use the "Vent Function"

The Vent function can be used only with the following command line:

- Source 1,2 and 3
- HCL
- Dope 1,2 and 3
- Inject 1,2 and 3
- Dilute 1,2 and 3

If the same command line is included in two subsequent steps and if in the first of the two steps the command line as the following structure:

Start Value = X (Slm/Sccm)
Stab Value = Y (Slm/Sccm)
Start Time = **0** (min/sec)
Stab Time = **0** (min/sec)
Ramp Time = **0** (min/sec)
Vent Time = Z (min/sec)

Where X,Y and Z are any value and 0 is zero time

At Z time before the end of the step which is including the above line, the VENT command is executed. Between the two steps the command is not interrupted.

6.3.5 Making a recipe executable

Only executable recipes can be run.
To make a recipe executable:

- Press the **Executable** button**.**
- Once the recipe is executable on recipe status field appears "EXECUTABLE".
- Once the recipe is not executable on recipes status field appears "NOT EXECUTABLE".

NOTE:
If a recipe includes errors, it cannot be set as EXECUTABLE.

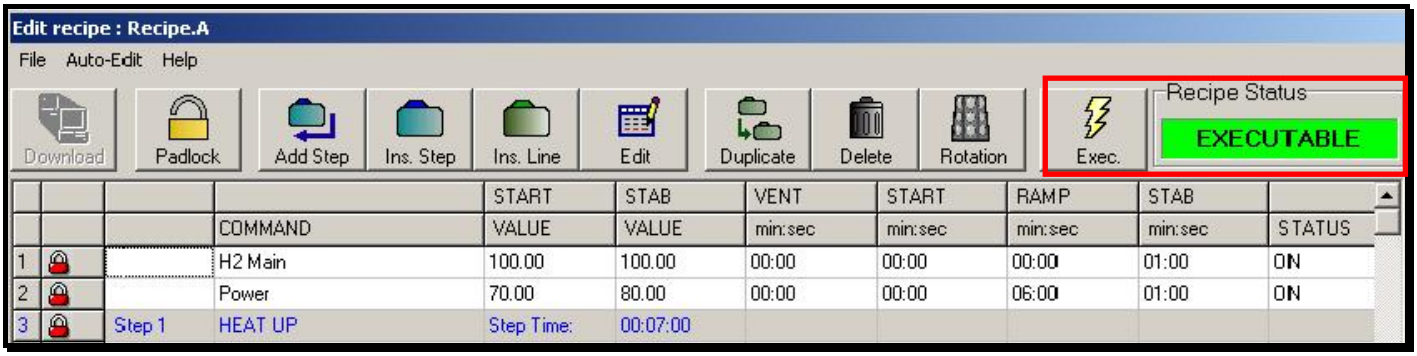

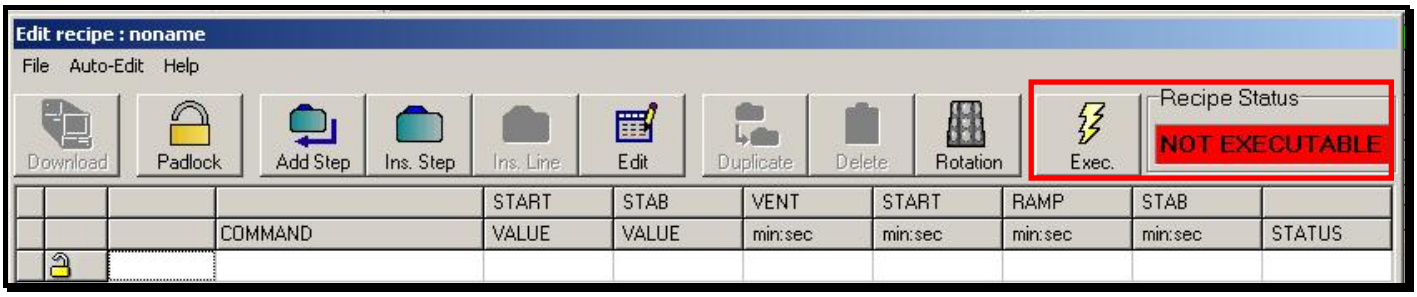

6.3.6 Lock/Unlock a recipe

By using the Auto edit options any new recipe line/step is created as a NOT MODIFIABLE line/step, viceversa by the manual edit any new recipe line/step is created as MODIFIABLE line/step.
A NOT MODIFIABLE line/step cannot be modified by the commands provided by ADJUST RECIPE STORED option (see PROGRAM menu) and ADJUST RECIPE RUNNING option (see BELL A/B menu).
A not modifiable line/step has the Lock icon closed.
The LOCK / UNLOCK button allows to convert a NOT MODIFIABLE LINE/STEP into a MODIFIABLE line/step and vice versa.

A NOT MODIFIABLE recipe appears as below. Not any command button is available

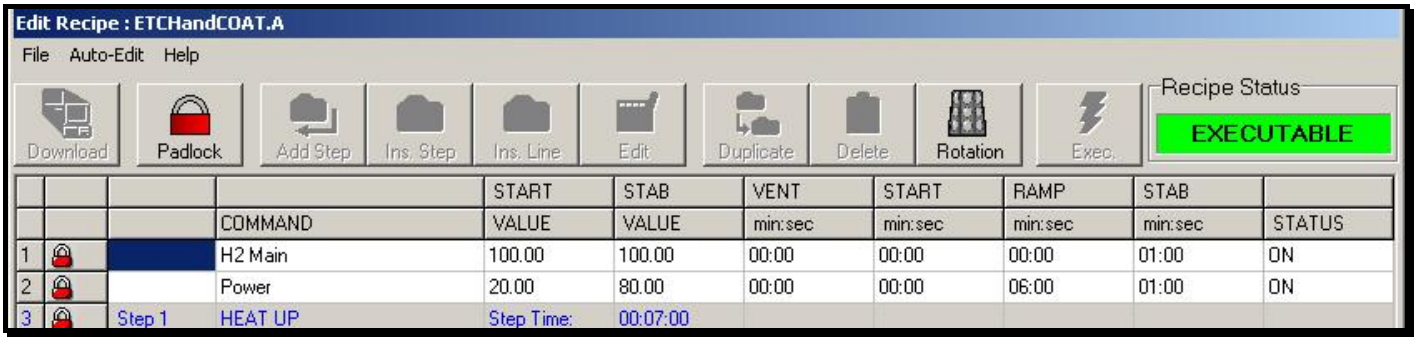

6.3.7 Save a recipe

When a recipe is edited, choose **Save as ... (Bell A)** or **Save As ... (Bell B)** commands, to save the recipe on the hard disk. These two commands allow to save the recipe to be executed on Bell A or Bell B.
A name must be chosen for the recipe, by entering a string into the input field available on the following screen form.

Recipe name must comply with the following limitations and rules:
- The name begins with letters.
- Extension ".A" or ".B" depends on whether the recipe will be executed on Bell-jar A or on Bell-jar B. Choosing the command **Save as ...** automatically specifies the extension.
- The name is maximum 19 characters length (extension excluded).
- The name cannot contain spaces.

If the name of an existing recipe is chosen and confirmed, the editor will replace the old recipe with the new one.

In the following situation:
- Recipe selected with the RUN command and reactor in RUN / WAIT status.
- PROGRAMMING command used on the **same** recipe in RUN / WAIT status.
- Recipe modifications done and saved **before** RUN ==> PROCESS passage ==>the recipe that will be executed **isn't the modified one.**

6.3.8 Opening and Modifying an existing recipe

Select **Open Recipe A** or **Open Recipe B** to open and to modify a recipe for Bell-jar A or Bell-jar B. The list of recipes available on the disk is displayed.

Choose recipe by clicking on it with mouse and confirm by click the OK button or click the CANCEL button to return back.
The selected recipe is displayed on the screen.
The available editor commands are those described in the previous chapter "Create a new recipe".
Select "Save" command in the File menu to save the modifications on the disk of the system.
Select "Save as" command to save the recipe with another name and/or extension. The original recipe will not be modified.

6.3.9 Exit

It allows to quit with or without saving the recipe.
Confirmation is required.

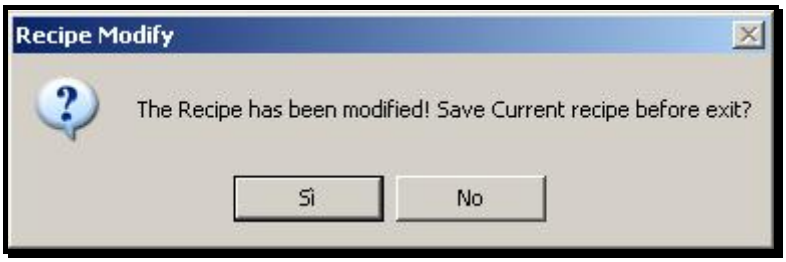

6.4 Recipes Errors

During recipe editing there are some rules to respect, in order to guarantee the correct reactor operations.
If these rules are not respected the recipes cannot be set as EXECUTABLE.
Once a rules is not respected a red "**X**" marks appears near the step/line containing the mistake.
By clicking on the "**X**"marks a brief description appears in the recipe editor bottom field:

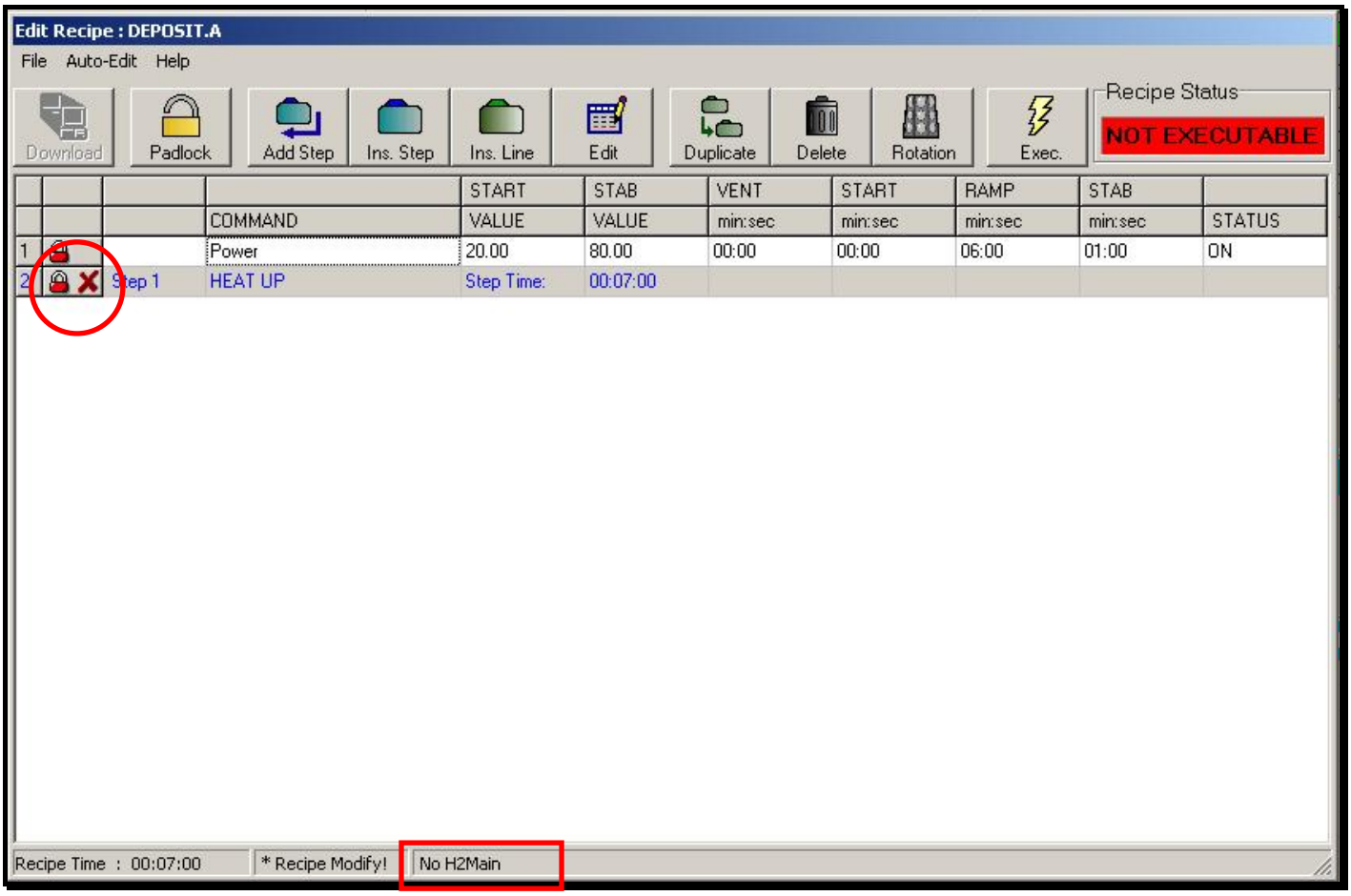

Message Errors List:

- The first step must include the H2Main line command. Message: **No H2Main !**
- The line command *STAB Time* must be different than 0 sec. Message: **Stab Time 0 !**
- The line command *Start Value* and *Stab Value* must be set as more than the 5 % of the MFC' total range. Message: **Start or Stab Value too low !** (i.e. : H2Main MFC range is 500 Slm. The minimum Start or Stab values settable is 26 Slm).
- Once a line commands *Start Value* and *Stab Value* are different, the *Ramp Time* must be different than 0 sec. Message: **Ramp too fast!**
- Once the power line commands *Start Value* and *Stab Value* are different, the *Ramp Time* must be enough to respect a ramping rate of minimum 50KW/min. Message: **Ramp too fast!**
- The power command line *Stab value* and *Start Value* can't exceed 130KW.Message: **Start or/and Stab value > max power!**
- The line commands *Start Value* and *Stab Value* are minor than the MFC minimum value. Message: **Start or/and Stab value < min value!**

- The line commands *Start Value* and *Stab Value* are greater than the MFC maximum value. Message: **Start or/and Stab value > max value!**
- The same Step cannot include the Temperature line and the Power line commands. Message: **Power & Temp!**
- The same Step cannot include two line equals. Message: **Twice command!**
- The Step must include at list one line command. Message: **Step not define!**
- In a reduced pressure recipe the first pressure line *Start Value* must be set to 760 Torr and the last pressure line Stab Value must be set to 760. Message: **First and/or last pressure command haven't set point 760!**
- The recipe includes the HCL FAST command line, once in the Reactor Configuration the HCL Fast is NOT AVAILABLE. Message: **HCL Fast not Available!**
- The recipe includes a Source1 or 2 or 3 command line, once in the Reactor Configuration the Source 1 or 2 or 3 is NOT AVAILABLE. Message: **Source selected not available!**
- The recipe includes a Dope 1 or 2 or 3 command line, once in the Reactor Configuration the Dope 1 or 2 or 3 is NOT AVAILABLE. Message: **Dope selected not available!**
- The SPOILER OFF command can be used only if is not present the Source command. Message: **Spoiler must be different than OFF when Source is ON!**

6.5 Auto edit

IMPORTANT !!!
The quickest and easiest way to build a **new** recipe is through the AUTO EDIT command.
We suggest using this command when building a **new** recipe.
Be careful, if the AUTO EDIT command is used on an existing recipe, it will replace the current recipe (a proper message with a confirmation request is anyway given).
In general terms:
Thickness : the target value must be set.
Growth rate : the expected growth rate must be set.
The computer will automatically decide the deposit time.
The following parameters are set as default values in the Management → Reactor Configuration → Parameters, menu (see), where they can be modified if needed.

Item	Function
H2 Main Set (Heat-up)	H2 main set point during heat-up
Ramp Time for power	Ramp time for power ramp between start and end values
End value for power ramp	Final power value after ramp (*)
Ramp time for temperature heat-up	Ramp time for temperature ramp between start and end values
Vent time	Time in vent for gases
H2 Main/ Temp ramp time	Ramp time for H2 Main / temperature between two steps
H2 / Temp stab time	Stab time for H2Main / temperature after ramp (time to elapse at end value)
H2 main set (step End)	H2 Main set point for purge during recipe's last step
H2 end ramp time	End step ramp time for H2 Main

The AUTO EDIT command has three options depending on the process needed: Intrinsic, Deposition, Susceptor Etch.

Note (*): by default in the PE2061S Reactor, the "End value for power ramp" corresponds to the "Pre H2 Power Stab Value" settled in the Management → Reactor Configuration → Purge Parameters menu

6.5.1 Intrinsic

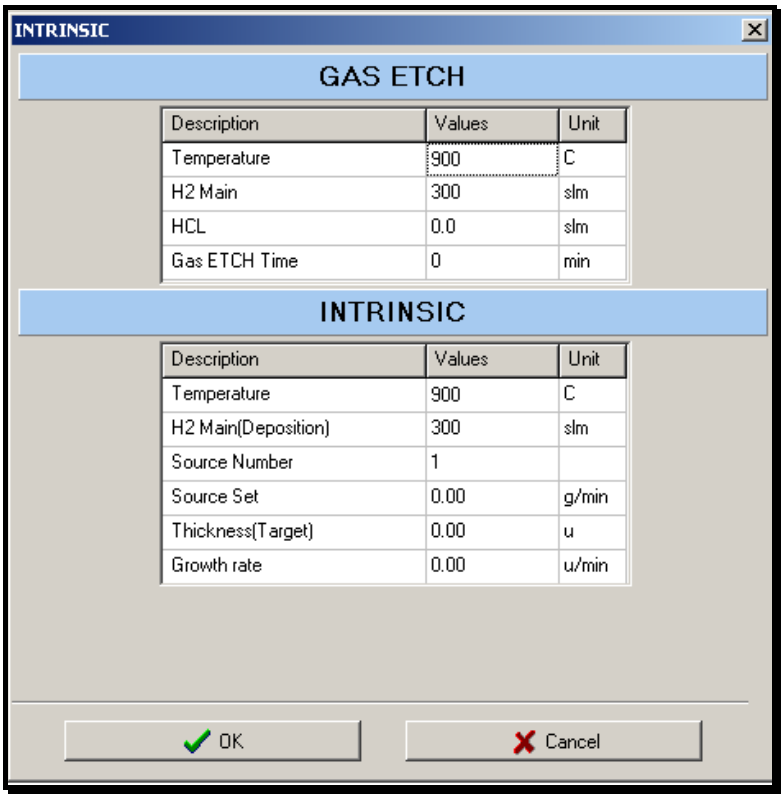

A recipe can be generated to run an intrinsic test with or without gas etch.
The following values should be set:

 # 1 - GAS ETCH STEP

- TEMPERATURE
- H2 MAIN
- HCl
- GAS ETCH TIME

IMPORTANT: If one of these values is zero, no gas etch step will be inserted.

 # 2 - INTRINSIC DEPOSIT

- TEMPERATURE
- H2 MAIN (deposition)
- SOURCE NUMBER (1,2,3)
- SOURCE SET
- THICKNESS
- GROWTH RATE

IMPORTANT: If one of these values is zero no intrinsic deposition step will be inserted.

However, the **SPOILER ON** command will be inserted **at the beginning of the temperature ramp** (see SPOILER ON command).

6.5.2 Deposition

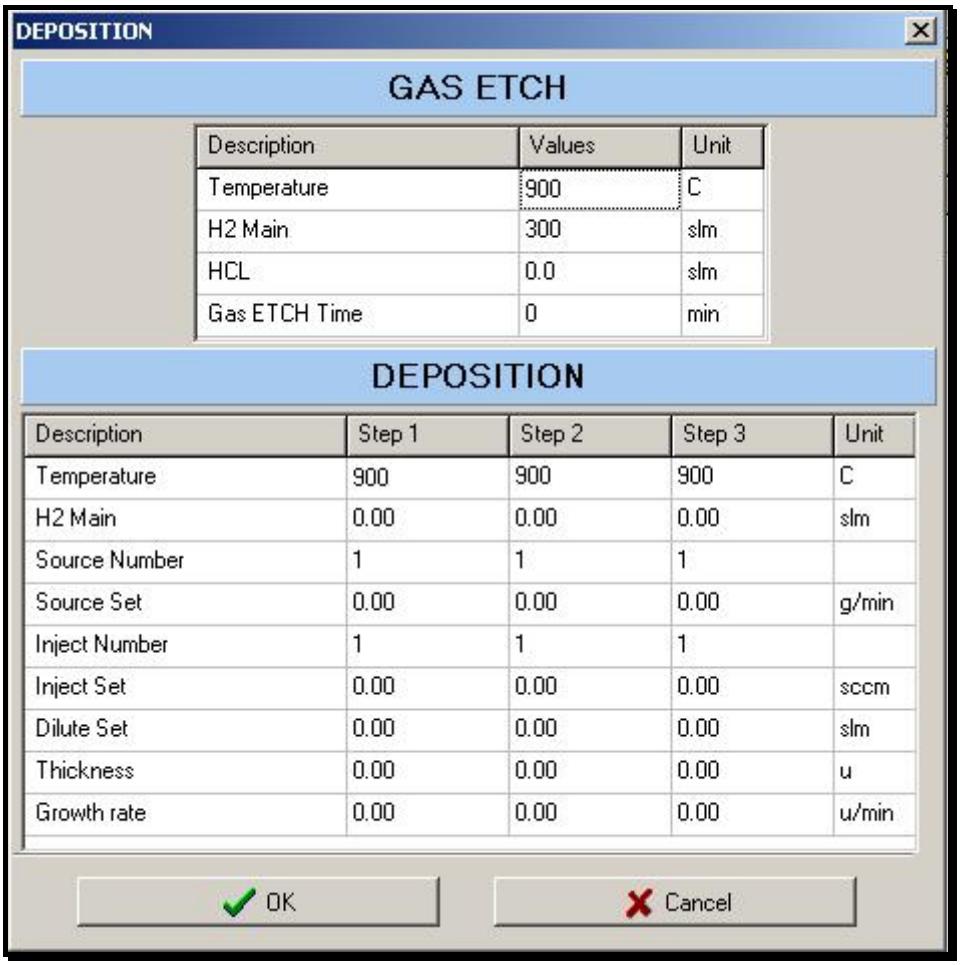

It is allowed to generate a recipe containing one gas etch step and up to three deposition steps. The following values should be set:

 # 1 - GAS ETCH STEP

- TEMPERATURE
- H2 MAIN
- HCl
- GAS ETCH TIME

IMPORTANT: If one of these values is zero no gas etch step will be inserted.

 # 2 - DEPOSIT STEP 1

- TEMPERATURE
- H2 MAIN
- SOURCE NUMBER (1,2,3)
- SOURCE SET
- INJECT NUMBER (1,2,3)
- INJECT SET
- DILUTE SET
- GROWTH RATE
- THICKNESS

IMPORTANT: If one of those values is zero, no relevant deposit step will be inserted.

 # 3 - DEPOSIT STEP 2 and

 # 4 - DEPOSIT STEP 3 follow the same rules.
However, the **SPOILER ON** command will be inserted **at the beginning of the temperature ramp** (see SPOILER ON command).

IMPORTANT !!!
If is available the "**Smart Dopants"** options the deposit window will be modified as follow (see the "Automatic DOPE1/DOPE3 switch" chapter for more reference):

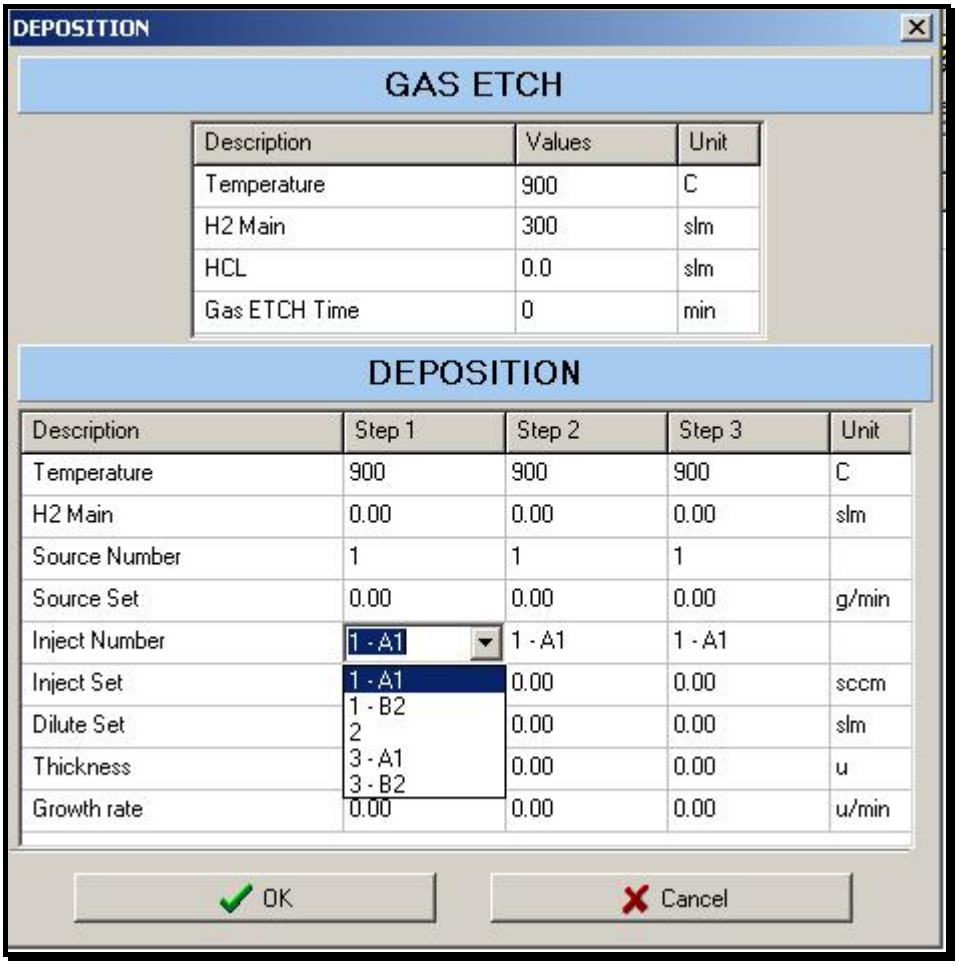

 # 1 - GAS ETCH STEP

- TEMPERATURE
- H2 MAIN
- HCl
- GAS ETCH TIME

IMPORTANT: If one of these values is zero no gas etch step will be inserted.

 # 2 - DEPOSIT STEP 1

- TEMPERATURE
- H2 MAIN
- SOURCE NUMBER (1,2,3)
- SOURCE SET

- INJECT NUMBER (INJECT 1 DopeA, INJECT 1 DopeB, INJECT 2, INJECT 3 DopeA, INJECT 3 DopeB)
- INJECT SET
- DILUTE SET
- GROWTH RATE
- THICKNESS

Note that "DopeA" and "DopeB" is only an example and the dopants name can be configured in the Management → Reactor configuration → Dope Switching, menu.

IMPORTANT: If one of those values is zero, no relevant deposit step will be inserted.

 # 3 - DEPOSIT STEP 2 and

 # 4 - DEPOSIT STEP 3 follow the same rules.

However, the **SPOILER ON** command will be inserted **at the beginning of the temperature ramp** (see SPOILER ON command).

6.5.3 Susceptor etch

A susceptor etch recipe can be generated with or without susceptor coating.
The following values should be set:

 # 1 - SUSCEPTOR ETCH STEP

- ETCH TEMPERATURE
- THICKNESS
- ETCH RATE

The H2 MAIN flow will be set to 40 SLM, the HCl by-pass controlled valve will be used.

IMPORTANT:

- If one of these values is zero no susceptor etch step will be inserted.
- If the **HCl Fast** option is available, the MFC HCl Fast control will be used instead of the HCl by pass
- If is available the HCL by-pass mode, the H2 MAIN flow will be set to 40 SLM

 # 2 - INTRINSIC DEPOSIT

- TEMPERATURE
- H2 MAIN
- SOURCE # (1,2,3)
- SOURCE SET
- THICKNESS
- GROWTH RATE

IMPORTANT: If one of these values is zero no intrinsic deposit step will be inserted.
If the **INTRINSIC DEPOSIT** step is inserted the **SPOILER ON** command will be inserted **after SUSCEPTOR ETCH STEP**, otherwise no SPOILER ON COMMAND will be inserted (see SPOILER ON command)**.**

6.6 Adjust Recipe Stored

Select this command to modify a recipe stored in the disk by a limited set of commands.

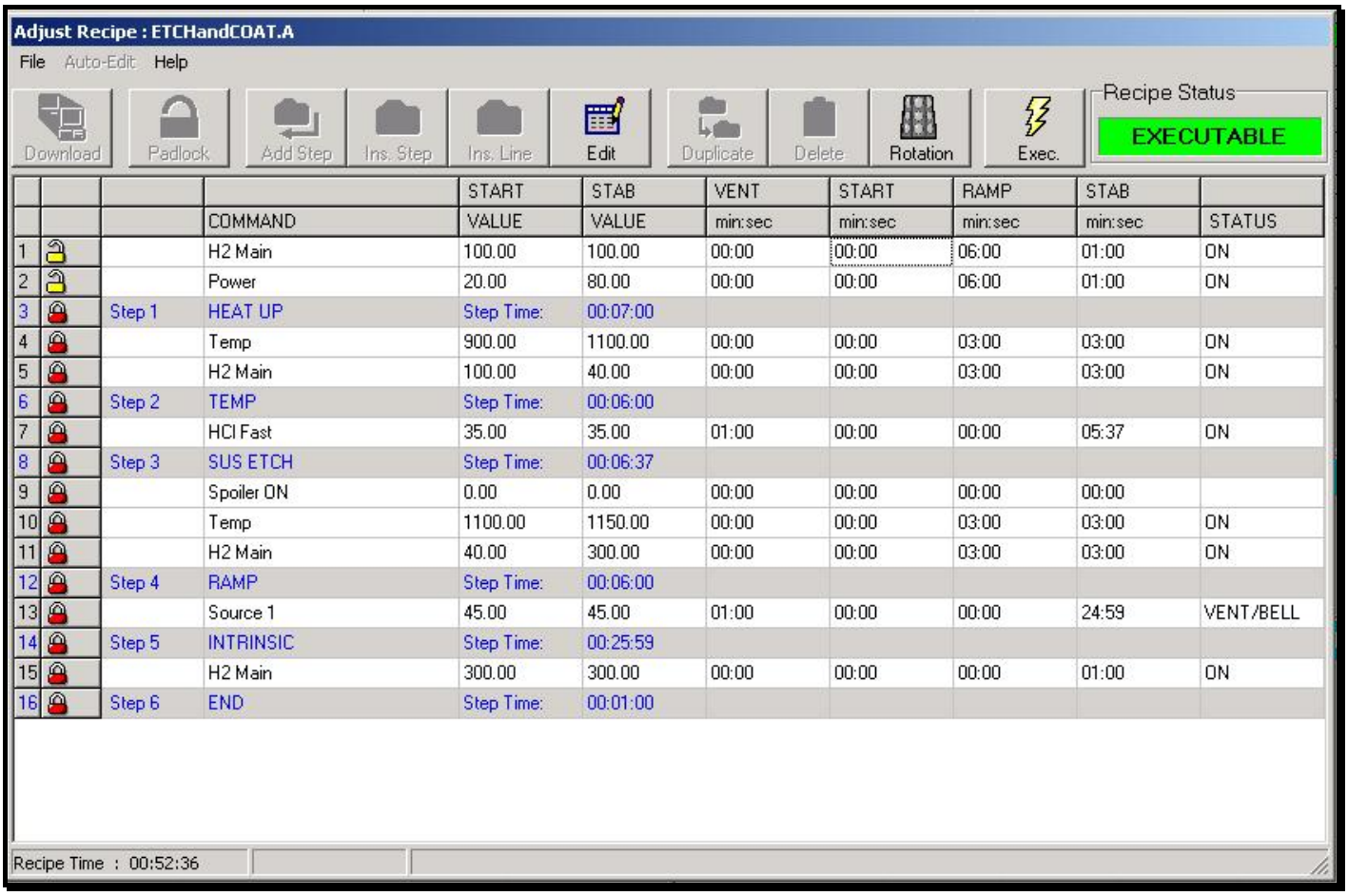

			COMMAND	START VALUE	STAB VALUE	VENT min:sec	START min:sec	RAMP min:sec	STAB min:sec	STATUS
1			H2 Main	100.00	100.00	00:00	00:00	06:00	01:00	ON
2			Power	20.00	80.00	00:00	00:00	06:00	01:00	ON
3		Step 1	HEAT UP	Step Time:	00:07:00					
4			Temp	900.00	1100.00	00:00	00:00	03:00	03:00	ON
5			H2 Main	100.00	40.00	00:00	00:00	03:00	03:00	ON
6		Step 2	TEMP	Step Time:	00:06:00					
7			HCl Fast	35.00	35.00	01:00	00:00	00:00	05:37	ON
8		Step 3	SUS ETCH	Step Time:	00:06:37					
9			Spoiler ON	0.00	0.00	00:00	00:00	00:00	00:00	
10			Temp	1100.00	1150.00	00:00	00:00	03:00	03:00	ON
11			H2 Main	40.00	300.00	00:00	00:00	03:00	03:00	ON
12		Step 4	RAMP	Step Time:	00:06:00					
13			Source 1	45.00	45.00	01:00	00:00	00:00	24:59	VENT/BELL
14		Step 5	INTRINSIC	Step Time:	00:25:59					
15			H2 Main	300.00	300.00	00:00	00:00	00:00	01:00	ON
16		Step 6	END	Step Time:	00:01:00					

Modifications available:

- Set point and time in a line
  Select the line with the mouse pointer and press the Edit button.
  A line cannot be modified with the closed lock icon (this is a not modifiable line).

- Step time and set point
  STAB TIME, and the SOURX, INJECT, DILUTE set point can be modified also within a step.
  The difference between LINE and STEP must be kept in mind (see the beginning of this chapter).

- Save recipe from station A to station B
  It is possible save the selected recipe from station A to station B and vice versa.
  This command for default is not available. It is possible make it available by the Management → Reactor Configuration → Reactor Options menu. The reactor configuration menu is protected by the supervisor password.

- Set recipe as executable
  It is possible make executable the selected recipe for the RUN A or RUN B menu.

This command for default is not available. It is possible make it available by the Management → Reactor Configuration → Reactor Options menu. The reactor configuration menu is protected by the supervisor password.

To be helped in adjusting deposit step

Click on the blue marker of the deposit step to select it and will appear the following window:

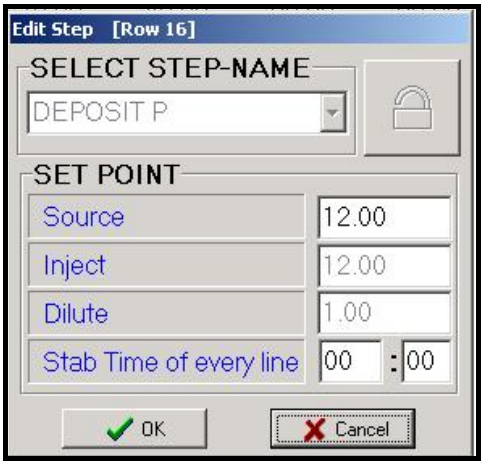

This window will help the operator to easily change the most important, recipe parameters.
The value in black color can be modified and the value in gray color not, because the corresponding line it is locked.

The time in this window can be entered in minute and second or in tenth of minute depending on the selection done in the Management → Reactor Configuration → Parameters → Set base time, menu.

As further help to avoid miss typing any changed performed to the recipe will be highlighted with a yellow color to facilitate the control of the new entered value.
I.e.: let starts from he below recipe:

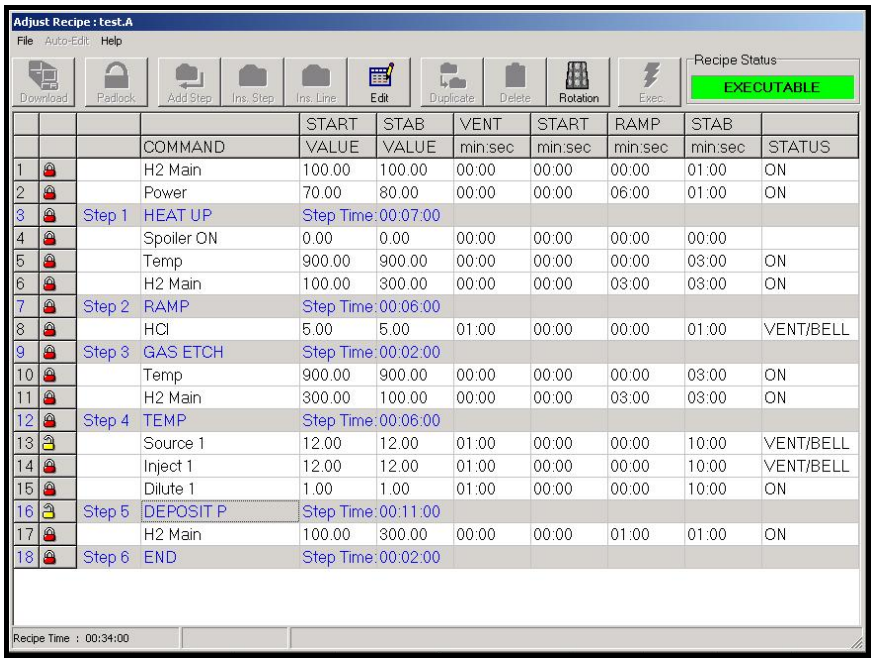

			COMMAND	START VALUE	STAB VALUE	VENT min:sec	START min:sec	RAMP min:sec	STAB min:sec	STATUS
1			H2 Main	100.00	100.00	00:00	00:00	00:00	01:00	ON
2			Power	70.00	80.00	00:00	00:00	06:00	01:00	ON
3		Step 1	HEAT UP	Step Time:	00:07:00					
4			Spoiler ON	0.00	0.00	00:00	00:00	00:00	00:00	
5			Temp	900.00	900.00	00:00	00:00	00:00	03:00	ON
6			H2 Main	100.00	300.00	00:00	00:00	03:00	03:00	ON
7		Step 2	RAMP	Step Time:	00:06:00					
8			HCl	5.00	5.00	01:00	00:00	00:00	01:00	VENT/BELL
9		Step 3	GAS ETCH	Step Time:	00:02:00					
10			Temp	900.00	900.00	00:00	00:00	00:00	03:00	ON
11			H2 Main	300.00	100.00	00:00	00:00	03:00	03:00	ON
12		Step 4	TEMP	Step Time:	00:06:00					
13			Source 1	12.00	12.00	01:00	00:00	00:00	10:00	VENT/BELL
14			Inject 1	12.00	12.00	01:00	00:00	00:00	10:00	VENT/BELL
15			Dilute 1	1.00	1.00	01:00	00:00	00:00	10:00	ON
16		Step 5	DEPOSIT P	Step Time:	00:11:00					
17			H2 Main	100.00	300.00	00:00	00:00	01:00	01:00	ON
18		Step 6	END	Step Time:	00:02:00					

If the operator modify the Source setting from **12.00** to **12.50** Slm and the deposit time from **10.00** to **11:00** minute the recipe will appears as follow.

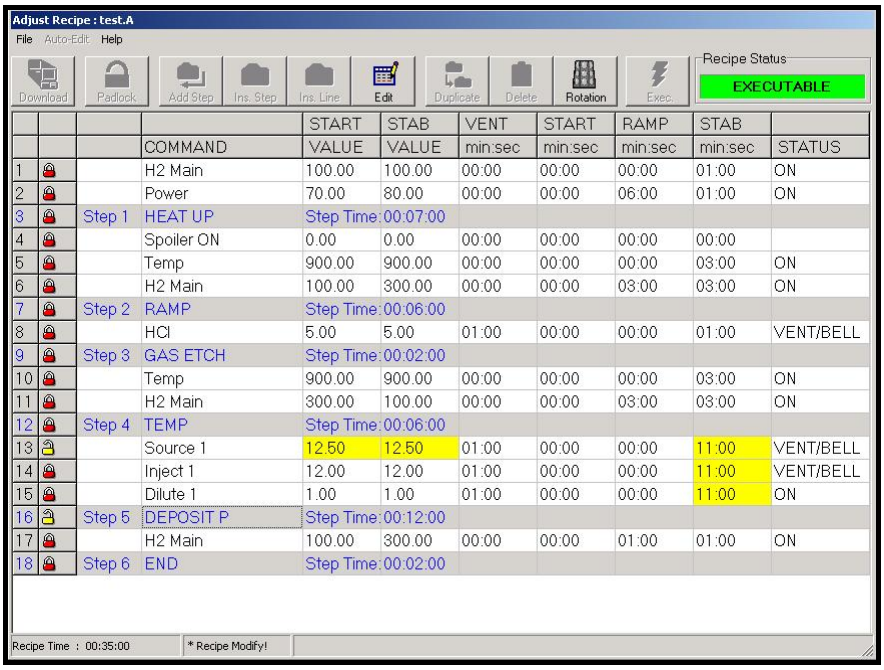

			COMMAND	START VALUE	STAB VALUE	VENT min:sec	START min:sec	RAMP min:sec	STAB min:sec	STATUS
1			H2 Main	100.00	100.00	00:00	00:00	00:00	01:00	ON
2			Power	70.00	80.00	00:00	00:00	06:00	01:00	ON
3		Step 1	HEAT UP	Step Time:	00:07:00					
4			Spoiler ON	0.00	0.00	00:00	00:00	00:00	00:00	
5			Temp	900.00	900.00	00:00	00:00	00:00	03:00	ON
6			H2 Main	100.00	300.00	00:00	00:00	03:00	03:00	ON
7		Step 2	RAMP	Step Time:	00:06:00					
8			HCl	5.00	5.00	01:00	00:00	00:00	01:00	VENT/BELL
9		Step 3	GAS ETCH	Step Time:	00:02:00					
10			Temp	900.00	900.00	00:00	00:00	00:00	03:00	ON
11			H2 Main	300.00	100.00	00:00	00:00	03:00	03:00	ON
12		Step 4	TEMP	Step Time:	00:06:00					
13			Source 1	12.50	12.50	01:00	00:00	00:00	11:00	VENT/BELL
14			Inject 1	12.00	12.00	01:00	00:00	00:00	11:00	VENT/BELL
15			Dilute 1	1.00	1.00	01:00	00:00	00:00	11:00	ON
16		Step 5	DEPOSIT P	Step Time:	00:12:00					
17			H2 Main	100.00	300.00	00:00	00:00	01:00	01:00	ON
18		Step 6	END	Step Time:	00:02:00					

The modified values remains highlighted until the save or exit command.

Set rotation parameter

If the Process Engineering allows the Operator to change the Rotation value, it is possible to modify the rotation parameter for the deposition step.
(see the "Edit Recipe" menu in the Program chapter)

IMPORTANT !!!

In the following situation:

- Recipe selected with RUN command and reactor in RUN / WAIT status
- ADJUST RECIPE STORED command used on the **same** recipe in the RUN / WAIT status
- Recipe modification done and saved **before** RUN ==> PROCESS passage ==>the recipe to be run is **the modified recipe.**

6.7 Set Rotation Parameters

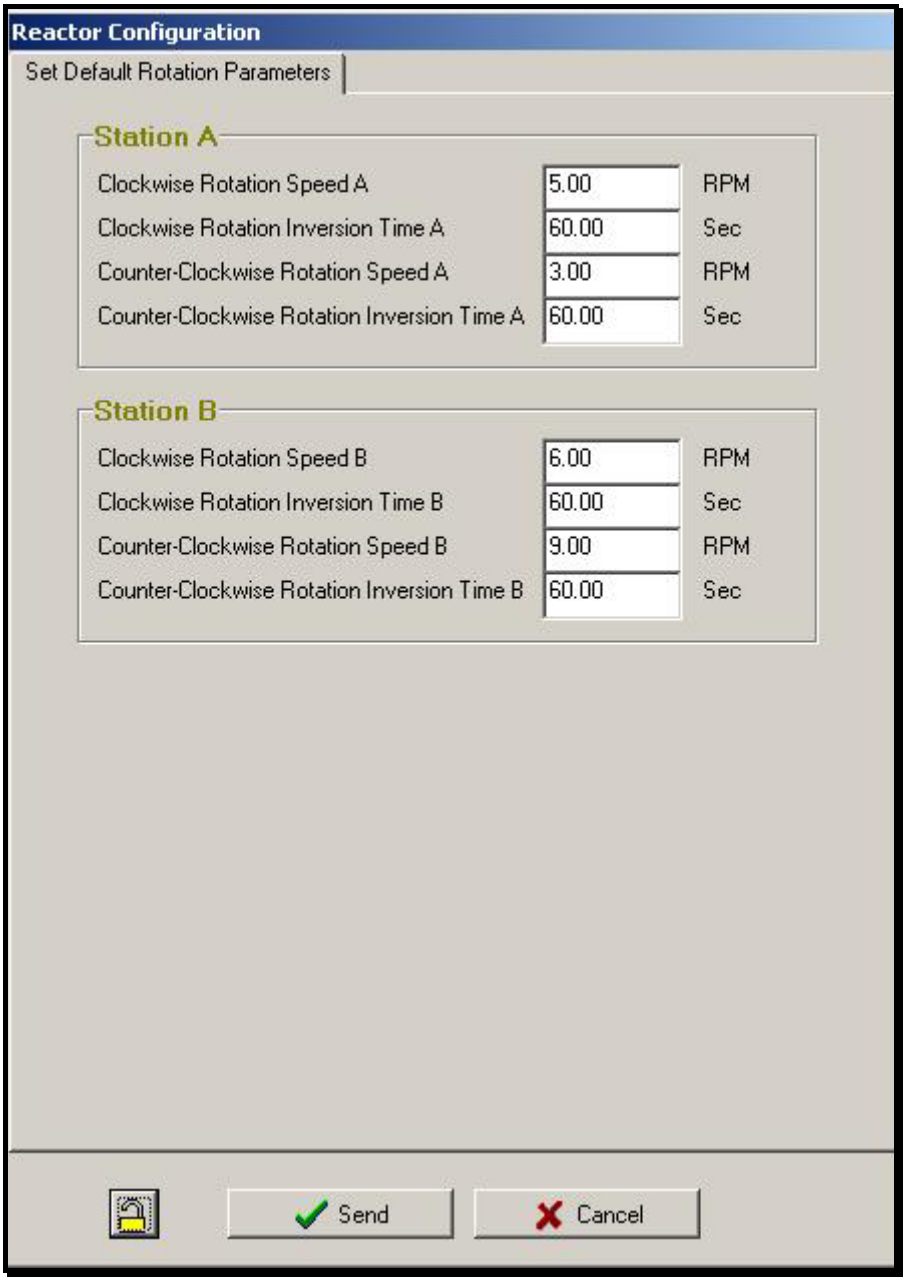

It allows modifying the rotation default values for bell-jar A and B.

Each bell-jar can have its own rotation values as follows:

- ClockWise rotation speed (1.00 - 10.00 rpm).
- CounterclockWise rotation speed (1.00 - 10.00 rpm).
- ClockWise rotation time (0.00 – 999.99 sec).
- CounterclockWise rotation time (0.00 – 999.99 sec).
- CLOCKWISE and C.CLOCKWISE ROTATION SPEED and TIME must be different from 0, otherwise the input will not be accepted and the following messages will be displayed:

IMPORTANT !!!
Please note that the above rotation settings are in operation **ONLY** when the silicon or the HCl are flowing inside the bell-jar (SX1or SX2 or SX 3= BELL and HCL=BELL).
Beside this condition the susceptor ALWAYS rotates in one direction at 4 rpm without reversing.

Moreover, rotation stops after POST H2 purge and starts again at the beginning of the next run.

Lock icons:

The LOCK / UNLOCK button allows the Operator changing the rotation parameters any time, without typing any password.
When the Lock icon is closed, the ROTATION PARAMETER window will require the process engineer password.
When the Lock icon is open, the ROTATION PARAMETER window will not required the process engineer password.
Summarizing:

STATUS	ROTATION PE2061	ROTATION PE2061S
PRE N2	OFF	OFF
PRE H2	OFF	ON
PROCESS (Si =/= BELL)	4 RPM (NO REVERSING)	4 RPM (NO REVERSING)
PROCESS (Si == BELL)	SET VALUES	SET VALUES
POST H2	4 RPM (NO REVERSING)	4 RPM (NO REVERSING)
POST N2	OFF	OFF

7 Views

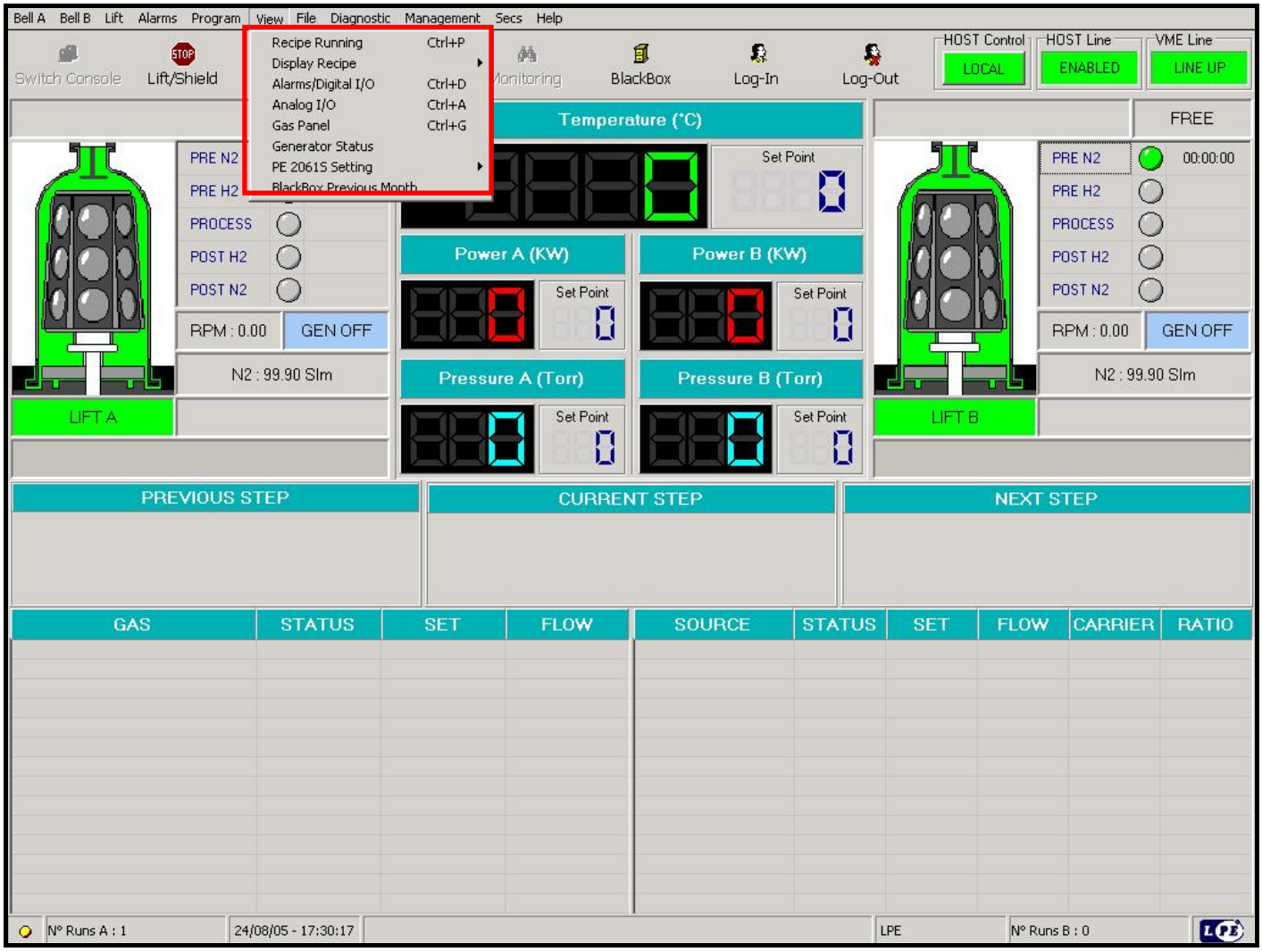

7.1 Access Level to View menu

All users can access to the View menu.

7.2 Recipe Running

This window is active only when a bell-jar is in PROCESS STATUS.
Select this window to display the recipe listing currently in PROCESS.
The current recipe step is shown with a yellow colored background.
If no bell-jars are in PROCESS STATUS this field is not available.

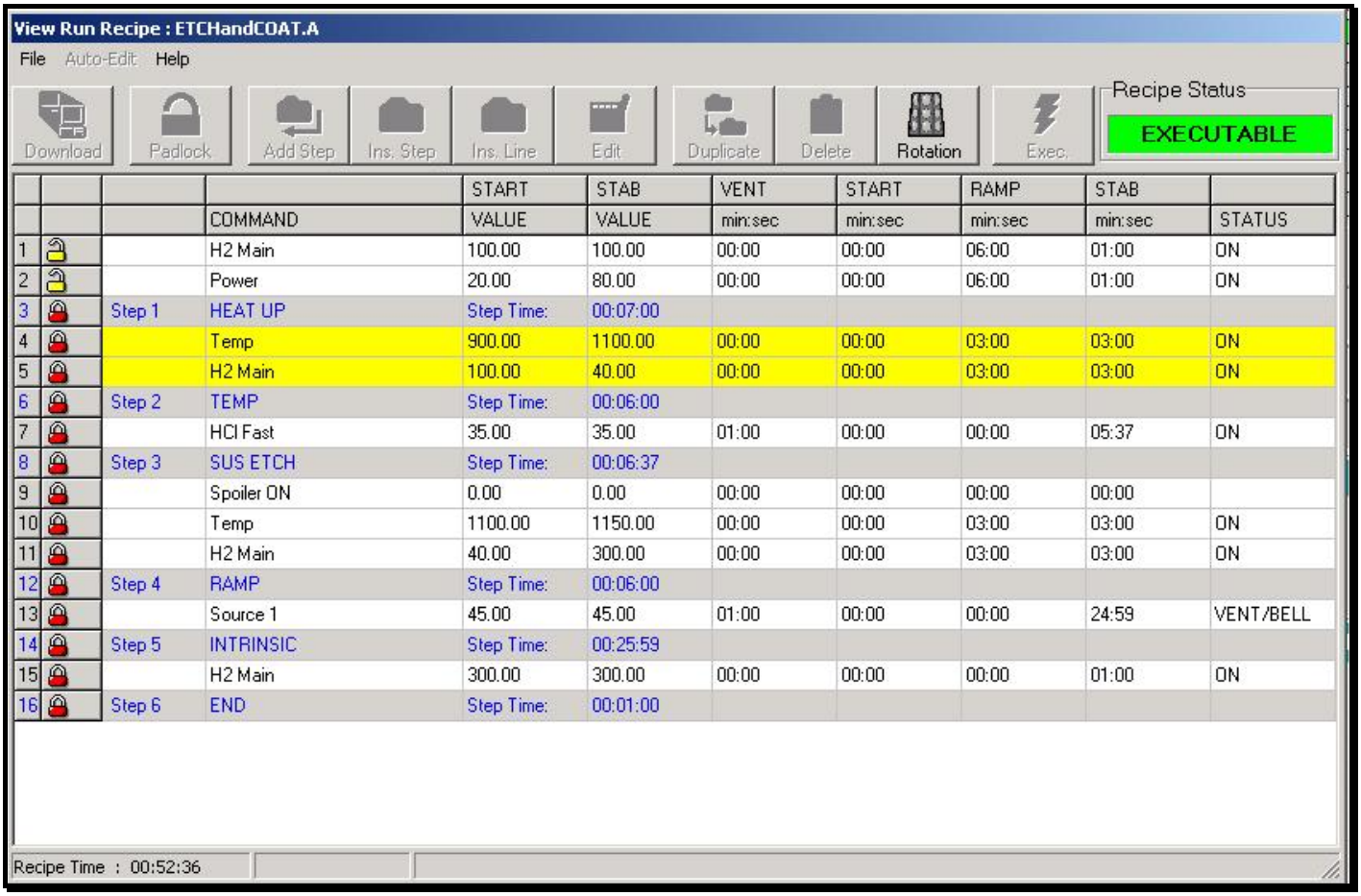

				START	STAB	VENT	START	RAMP	STAB	
			COMMAND	VALUE	VALUE	min:sec	min:sec	min:sec	min:sec	STATUS
1			H2 Main	100.00	100.00	00:00	00:00	06:00	01:00	ON
2			Power	20.00	80.00	00:00	00:00	06:00	01:00	ON
3		Step 1	HEAT UP	Step Time:	00:07:00					
4			Temp	900.00	1100.00	00:00	00:00	03:00	03:00	ON
5			H2 Main	100.00	40.00	00:00	00:00	03:00	03:00	ON
6		Step 2	TEMP	Step Time:	00:06:00					
7			HCl Fast	35.00	35.00	01:00	00:00	00:00	05:37	ON
8		Step 3	SUS ETCH	Step Time:	00:06:37					
9			Spoiler ON	0.00	0.00	00:00	00:00	00:00	00:00	
10			Temp	1100.00	1150.00	00:00	00:00	03:00	03:00	ON
11			H2 Main	40.00	300.00	00:00	00:00	03:00	03:00	ON
12		Step 4	RAMP	Step Time:	00:06:00					
13			Source 1	45.00	45.00	01:00	00:00	00:00	24:59	VENT/BELL
14		Step 5	INTRINSIC	Step Time:	00:25:59					
15			H2 Main	300.00	300.00	00:00	00:00	00:00	01:00	ON
16		Step 6	END	Step Time:	00:01:00					

7.3 Display Recipe

Select this command to list a recipe stored in the hard disk.
Select **Display recipe A** or **Display recipe B** and than select with the mouse the name of the recipe which should be displayed and press on the OK button to confirm or to CANCEL button to return back.

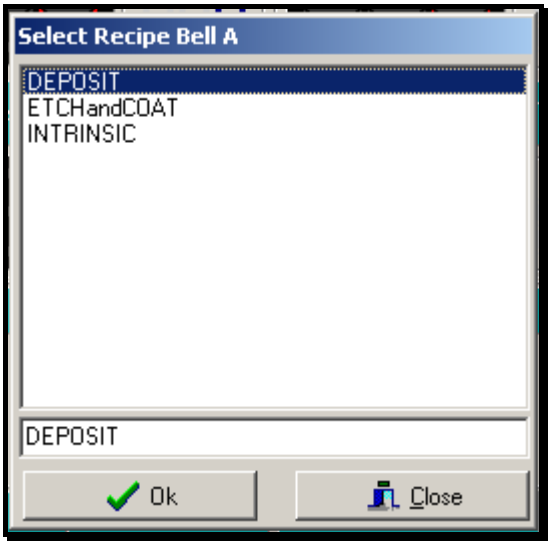

The selected recipe will be displayed.

7.4 Alarms Digital I/0

This window displays the reactor digital Input and digital output.

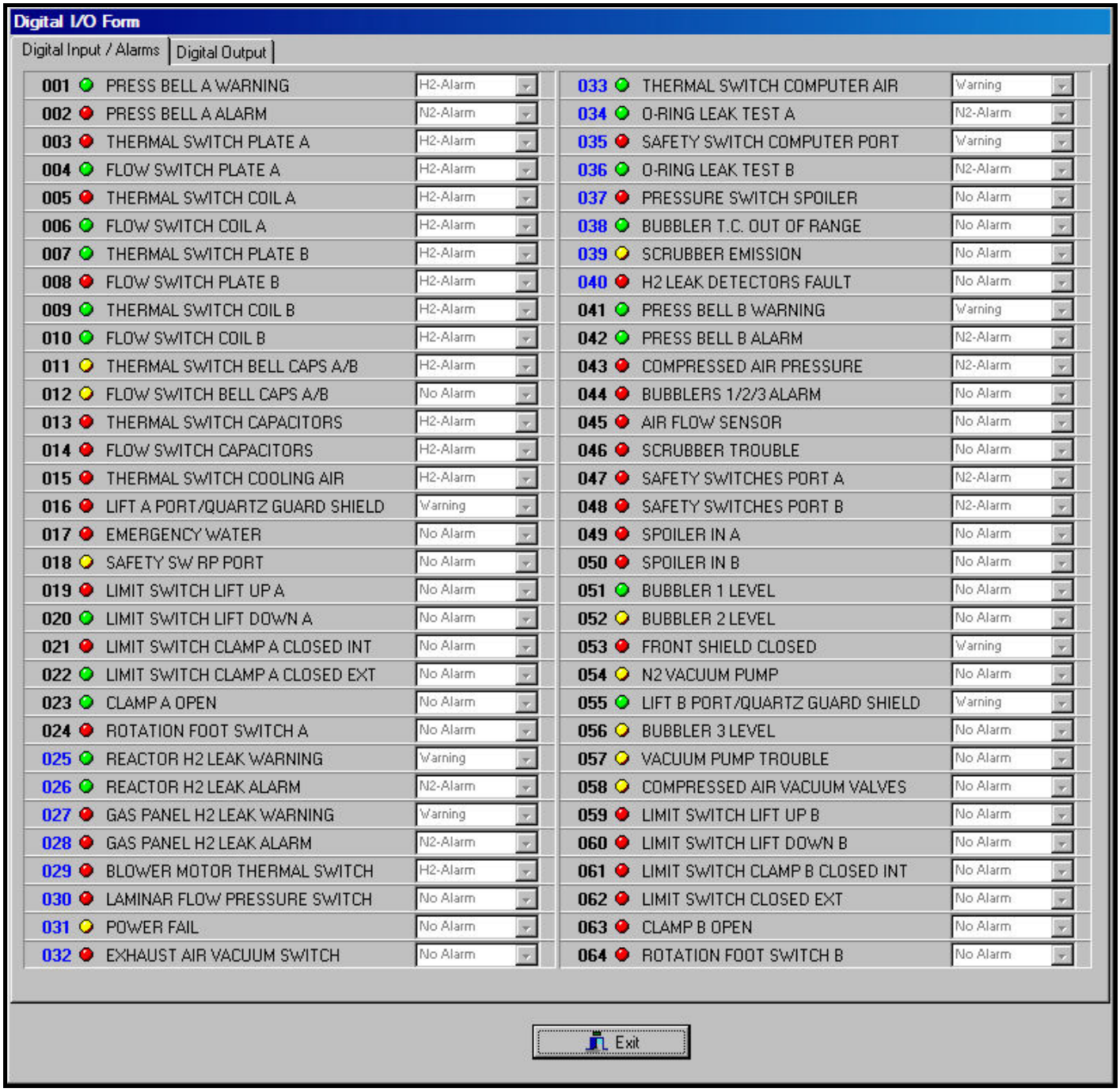

The led at the left of each description gives the following information:

- **GREEN = DIGITAL INPUT CLOSED**
- **RED = DIGITAL INPUT OPEN**
- **YELLOW = DIGITAL INPUT NOT USED**

The Pull down menu at the right of each description describes the type of intervention that the reactor undertake in case the relevant digital input is triggered:

- **TYPE " W "** (WARNING)
- **TYPE " H "** (HYDROGEN)
- **TYPE " N "** (NITROGEN)

For troubleshooting purpose it is important know from where the digital inputs are coming:

- From 001 to 024 are displayed the alarm coming from A-71 board.
- From 025 to 040 are displayed the alarm coming from A-23 board.
- From 041 to 064 are displayed the alarm coming from A-43 board.

The led at the left of each description gives the following information:

- **GREEN = DIGITAL OUTPUT CLOSED**
- **RED = DIGITAL OUTPUT OPEN**

For more references see Management Chapter.

7.5 Analog I/O

This Multi tab window displays voltage across analog inputs and outputs as follows.

Analog Inputs:

001	SX1 CARRIER	0.12
002	SX1	0.00
003	SX1 RATIO	0.12
004	FC3 N2	0.33
005	FC80 HCl	0.00
006	FC51 DILUTE1	0.00
007	FC2 H2 PURGE	0.25
008	FC1 H2 MAIN	0.00
009	SX2 CARRIER	0.12
010	SX2	0.00
011	SX2 RATIO	0.12
012	FC63 DOPE2	0.00
013	FC52 INJECT1	0.00
014	FC53 DOPE1	0.00
015	FC62 INJECT2	0.00
016	FC61 DILUTE2	0.00
017	LIFT POTENTIOMETER A	0.12
018	PYROMETER A	72.94
019	LIFT POTENTIOMETER B	0.12
020	PYROMETER B	72.94
021	FC71 DILUTE3	0.00
022	FC72 INJECT3	0.00
023	FC83 HCl FAST	0.00
024	FC73 DOPE3	0.00
025	HCl PRESSURE	0.12
026	DOPE1 PRESSURE	0.12
027	DOPE2 PRESSURE	0.12
028	DOPE3 PRESSURE	0.12
029	SILICON DRUM WEIGHT	0.12
030	VACUUM A	0.12
031	VACUUM B	0.12
032	NOT USED	0.12
033	NOT USED	0.12
034	NOT USED	0.12
035	NOT USED	0.12
036	NOT USED	0.12
037	FC17 H2 ROT. PURGE	0.00
038	FC85 HCL ROT. PURGE	0.00

Analog Outputs:

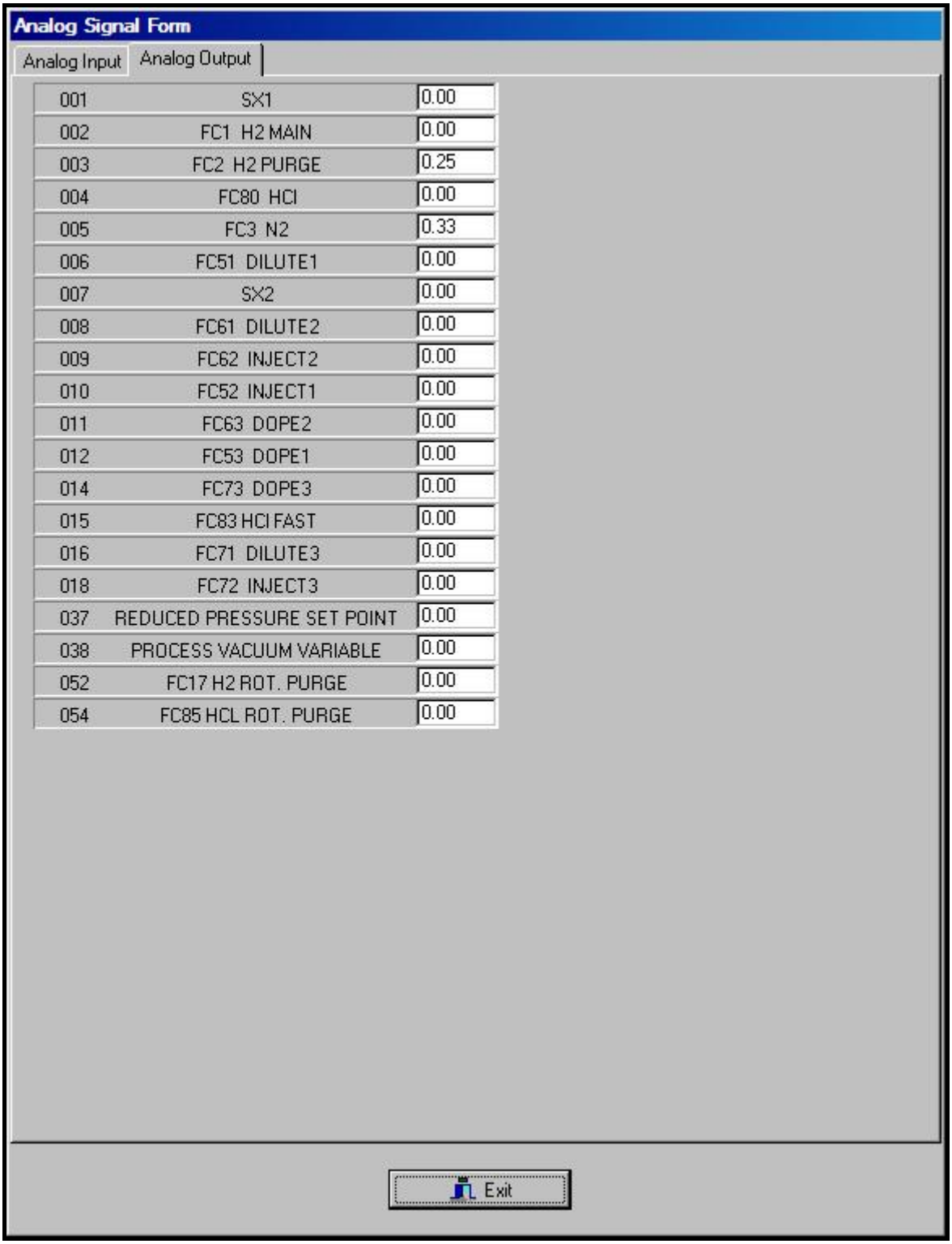

For more references see Management Chapter.

7.6 Gas Panel

Select this command to display actual flow of all gases in real-time with indication of status (OFF, ON, VENT, BELL) and set point.
Please note that all gases' flow is displayed (also in the OFF status) in this page, whereas in the process page the flow is displayed only if the relevant gas is in ON status.

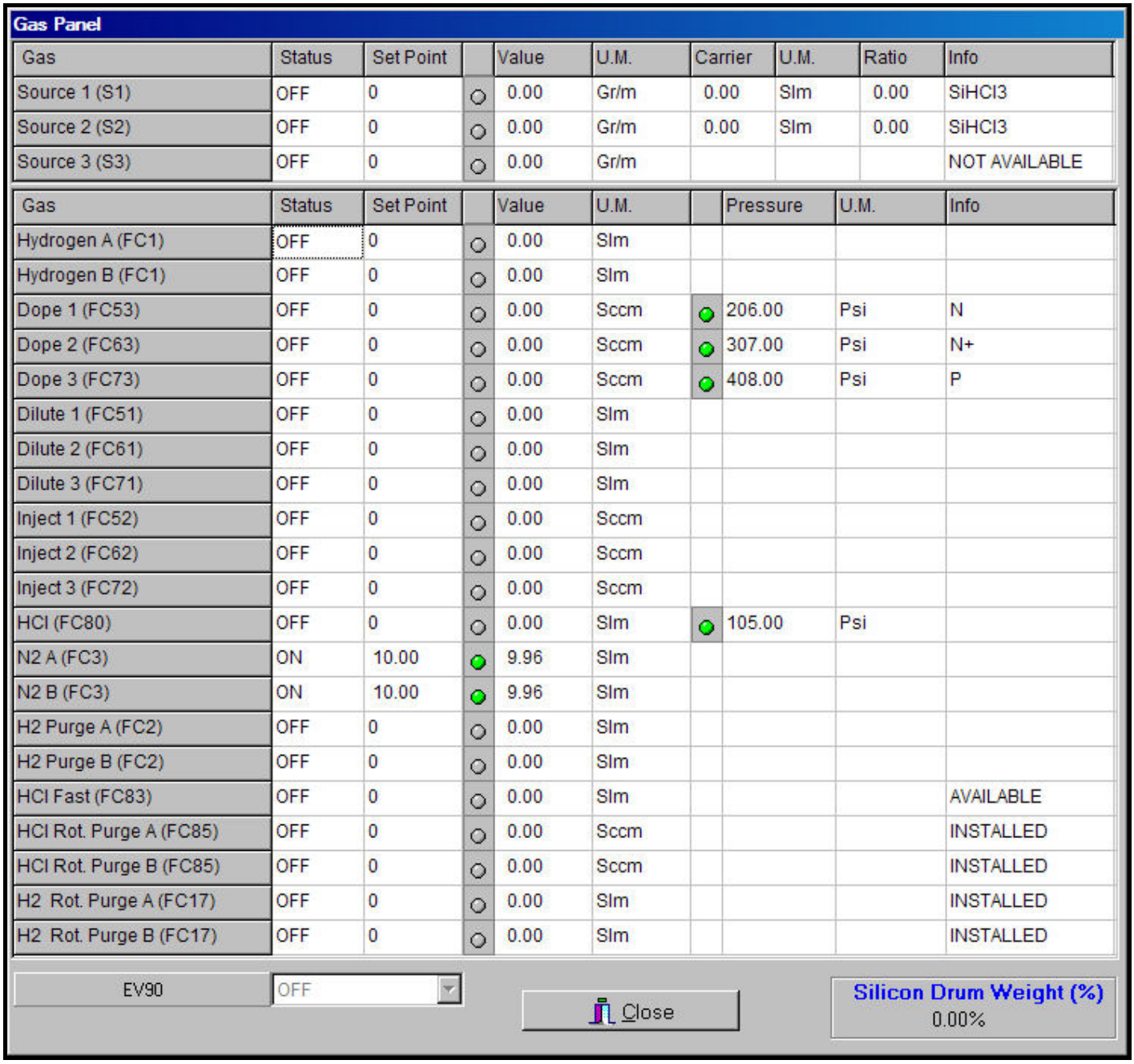

Gas Panel

Gas	Status	Set Point		Value	U.M.	Carrier	U.M.	Ratio	Info
Source 1 (S1)	OFF	0		0.00	Gr/m	0.00	Slm	0.00	SiHCl3
Source 2 (S2)	OFF	0		0.00	Gr/m	0.00	Slm	0.00	SiHCl3
Source 3 (S3)	OFF	0		0.00	Gr/m				NOT AVAILABLE

Gas	Status	Set Point		Value	U.M.		Pressure	U.M.	Info
Hydrogen A (FC1)	OFF	0		0.00	Slm				
Hydrogen B (FC1)	OFF	0		0.00	Slm				
Dope 1 (FC53)	OFF	0		0.00	Sccm		206.00	Psi	N
Dope 2 (FC63)	OFF	0		0.00	Sccm		307.00	Psi	N+
Dope 3 (FC73)	OFF	0		0.00	Sccm		408.00	Psi	P
Dilute 1 (FC51)	OFF	0		0.00	Slm				
Dilute 2 (FC61)	OFF	0		0.00	Slm				
Dilute 3 (FC71)	OFF	0		0.00	Slm				
Inject 1 (FC52)	OFF	0		0.00	Sccm				
Inject 2 (FC62)	OFF	0		0.00	Sccm				
Inject 3 (FC72)	OFF	0		0.00	Sccm				
HCl (FC80)	OFF	0		0.00	Slm		105.00	Psi	
N2 A (FC3)	ON	10.00		9.96	Slm				
N2 B (FC3)	ON	10.00		9.96	Slm				
H2 Purge A (FC2)	OFF	0		0.00	Slm				
H2 Purge B (FC2)	OFF	0		0.00	Slm				
HCl Fast (FC83)	OFF	0		0.00	Slm				AVAILABLE
HCl Rot. Purge A (FC85)	OFF	0		0.00	Sccm				INSTALLED
HCl Rot. Purge B (FC85)	OFF	0		0.00	Sccm				INSTALLED
H2 Rot. Purge A (FC17)	OFF	0		0.00	Slm				INSTALLED
H2 Rot. Purge B (FC17)	OFF	0		0.00	Slm				INSTALLED

EV90 OFF

Close

Silicon Drum Weight (%)
0.00%

Note:
If is available the **"Smart Dopants"** option, in the views gas panel page will be displayed also the automatic switching command (see "Automatic DOPE1/DOPE3 Or DOPE1/DOPE2 switch" chapter for more reference):

DOPE1/DOPE3

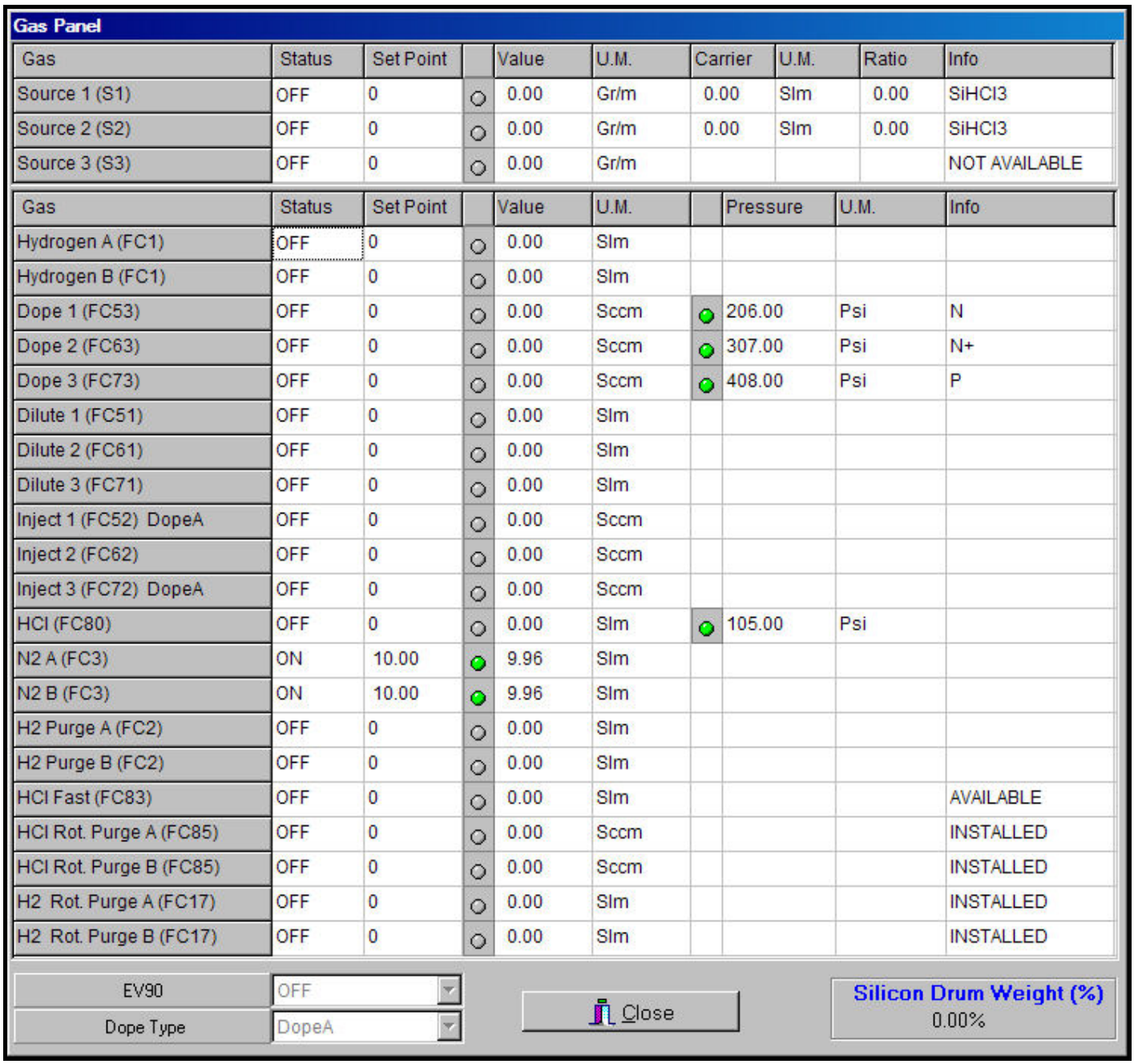

Gas Panel

Gas	Status	Set Point		Value	U.M.	Carrier	U.M.	Ratio	Info
Source 1 (S1)	OFF	0		0.00	Gr/m	0.00	Slm	0.00	SiHCl3
Source 2 (S2)	OFF	0		0.00	Gr/m	0.00	Slm	0.00	SiHCl3
Source 3 (S3)	OFF	0		0.00	Gr/m				NOT AVAILABLE

Gas	Status	Set Point		Value	U.M.		Pressure	U.M.	Info
Hydrogen A (FC1)	OFF	0		0.00	Slm				
Hydrogen B (FC1)	OFF	0		0.00	Slm				
Dope 1 (FC53)	OFF	0		0.00	Sccm		206.00	Psi	N
Dope 2 (FC63)	OFF	0		0.00	Sccm		307.00	Psi	N+
Dope 3 (FC73)	OFF	0		0.00	Sccm		408.00	Psi	P
Dilute 1 (FC51)	OFF	0		0.00	Slm				
Dilute 2 (FC61)	OFF	0		0.00	Slm				
Dilute 3 (FC71)	OFF	0		0.00	Slm				
Inject 1 (FC52) DopeA	OFF	0		0.00	Sccm				
Inject 2 (FC62)	OFF	0		0.00	Sccm				
Inject 3 (FC72) DopeA	OFF	0		0.00	Sccm				
HCl (FC80)	OFF	0		0.00	Slm		105.00	Psi	
N2 A (FC3)	ON	10.00		9.96	Slm				
N2 B (FC3)	ON	10.00		9.96	Slm				
H2 Purge A (FC2)	OFF	0		0.00	Slm				
H2 Purge B (FC2)	OFF	0		0.00	Slm				
HCl Fast (FC83)	OFF	0		0.00	Slm				AVAILABLE
HCl Rot. Purge A (FC85)	OFF	0		0.00	Sccm				INSTALLED
HCl Rot. Purge B (FC85)	OFF	0		0.00	Sccm				INSTALLED
H2 Rot. Purge A (FC17)	OFF	0		0.00	Slm				INSTALLED
H2 Rot. Purge B (FC17)	OFF	0		0.00	Slm				INSTALLED

EV90	OFF
Dope Type	DopeA

Close

Silicon Drum Weight (%)
0.00%

DOPE1/DOPE2

Gas Panel

Gas	Status	Set Point		Value	U.M.	Carrier	U.M.	Ratio	Info
Source 1 (S1)	OFF	0		0.00	Gr/m	0.00	Slm	0.00	SiHCl3
Source 2 (S2)	OFF	0		0.00	Gr/m	0.00	Slm	0.00	SiHCl3
Source 3 (S3)	OFF	0		0.00	Gr/m				NOT AVAILABLE

Gas	Status	Set Point		Value	U.M.		Pressure	U.M.	Info
Hydrogen A (FC1)	OFF	0		0.00	Slm				
Hydrogen B (FC1)	OFF	0		0.00	Slm				
Dope 1 (FC53)	OFF	0		0.00	Sccm		206.00	Psi	N
Dope 2 (FC63)	OFF	0		0.00	Sccm		307.00	Psi	N+
Dope 3 (FC73)	OFF	0		0.00	Sccm		408.00	Psi	P
Dilute 1 (FC51)	OFF	0		0.00	Slm				
Dilute 2 (FC61)	OFF	0		0.00	Slm				
Dilute 3 (FC71)	OFF	0		0.00	Slm				
Inject 1 (FC52) DopeA	OFF	0		0.00	Sccm				
Inject 2 (FC62) DopeA	OFF	0		0.00	Sccm				
Inject 3 (FC72)	OFF	0		0.00	Sccm				
HCl (FC80)	OFF	0		0.00	Slm		105.00	Psi	
N2 A (FC3)	ON	10.00		9.96	Slm				
N2 B (FC3)	ON	10.00		9.96	Slm				
H2 Purge A (FC2)	OFF	0		0.00	Slm				
H2 Purge B (FC2)	OFF	0		0.00	Slm				
HCl Fast (FC83)	OFF	0		0.00	Slm				AVAILABLE
HCl Rot. Purge A (FC85)	OFF	0		0.00	Sccm				INSTALLED
HCl Rot. Purge B (FC85)	OFF	0		0.00	Sccm				INSTALLED
H2 Rot. Purge A (FC17)	OFF	0		0.00	Slm				INSTALLED
H2 Rot. Purge B (FC17)	OFF	0		0.00	Slm				INSTALLED

EV90	OFF
Dope Type	DopeA

Close

Silicon Drum Weight (%)
0.00%

7.7 Generator Status

Select this command to display generator status.

GENERATOR
Display ON/OFF status of the station running a process.

ALARM STATUS
Display the generator ON/OFF alarm status.

GENERATOR STATUS
Display the generator AUTOMATIC/MANUAL status.

POWER
Display power of the station running a process.

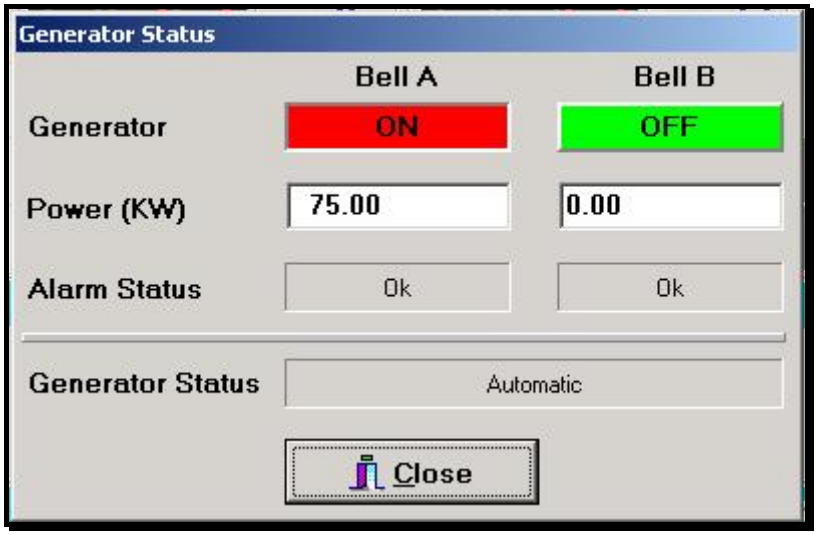

7.8 Pe2061Settings

The Pe2061Setting menu includes others three sub menus which will be describes in the following paragraphs.

- Reactor Configuration.
- Reactor Consumption.
- Reactor Installation.

7.9 Reactor Configuration

The Reactor Configuration window is a multi tab window.
Each tab includes a set of parameters inherent the same reactor Function.
All tabs are described in the following paragraphs.

7.9.1 MFC Range

This window displays the Gas Panel Mass Flow Controllers Range.

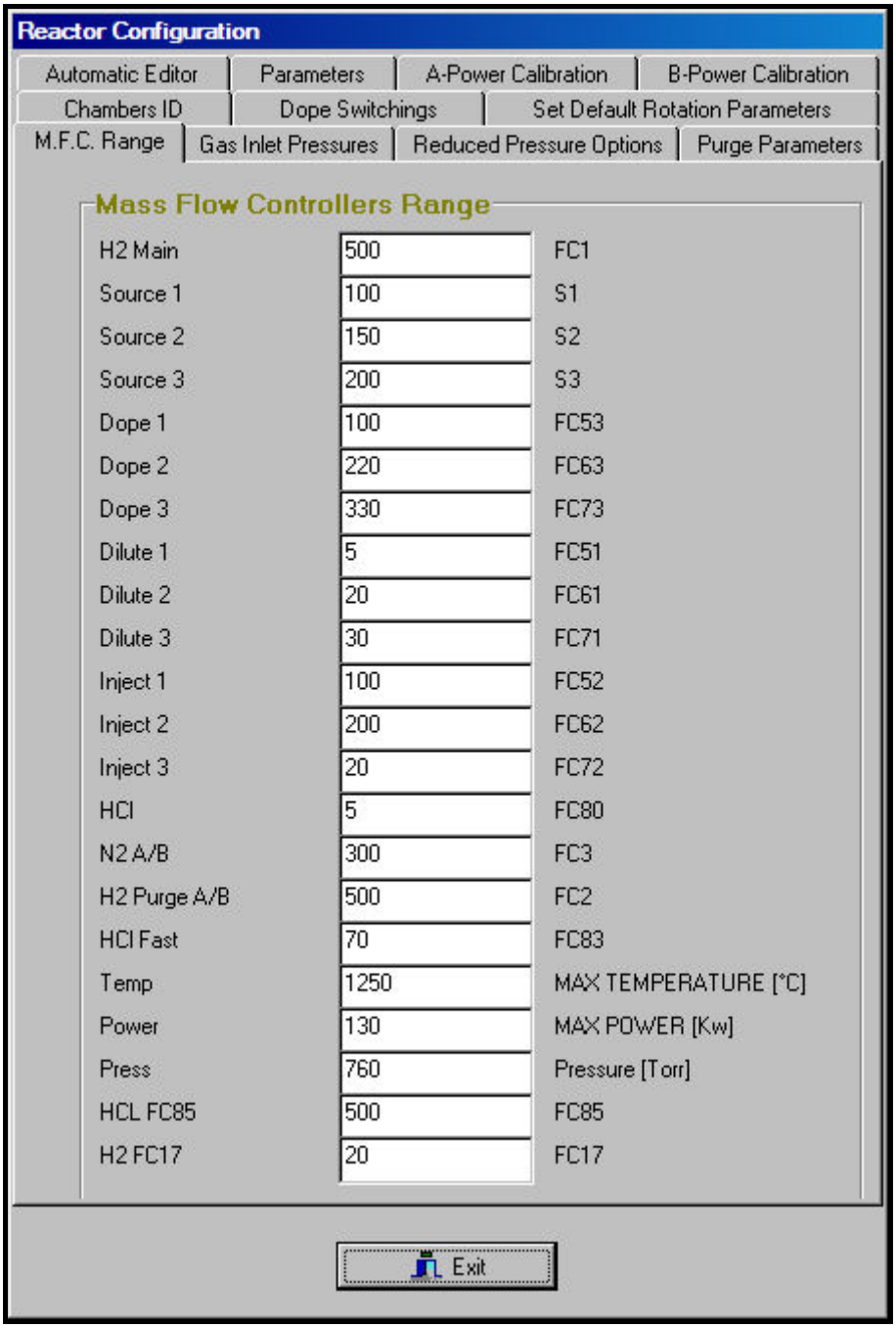

The LEFT column, shown the gas line names.
The CENTER column, shown the maximum set point that the correspondent mass flow controller can get.
For ex:
The H2 main mass flow controller has a range from 0 to 500 Slm .In the correspondent value column field, must be inserted 500.
The RIGHT column, shown for Mass Flow Controller name on the Gas Panel drawings.

Are also available a temperature, a power and a pressure parameters:

- Max power: is the maximum power that the generator can give to the reactor. If during the process the reactor request for more than one minute a value of power greater or equal to this value the process will be aborted, jumping directly to the POST H2 status and **"Max Power"** alarm message will be displayed.
- Max temperature: is the maximum value of temperature that the reactor can get. If during the process the real temperature exceed this value, the process will be automatically aborted jumping directly to the POST H2 status and **"Bell A/B Over Temperature"** alarm message will be displayed.
- Pressure: is the maximum set point that a Pressure Line can have. This parameter is valid only when the Low Pressure System is Available.

For more reference see the Management chapter.

7.9.2 Purge Parameters

This window displays the parameters for the reactor purging cycles.

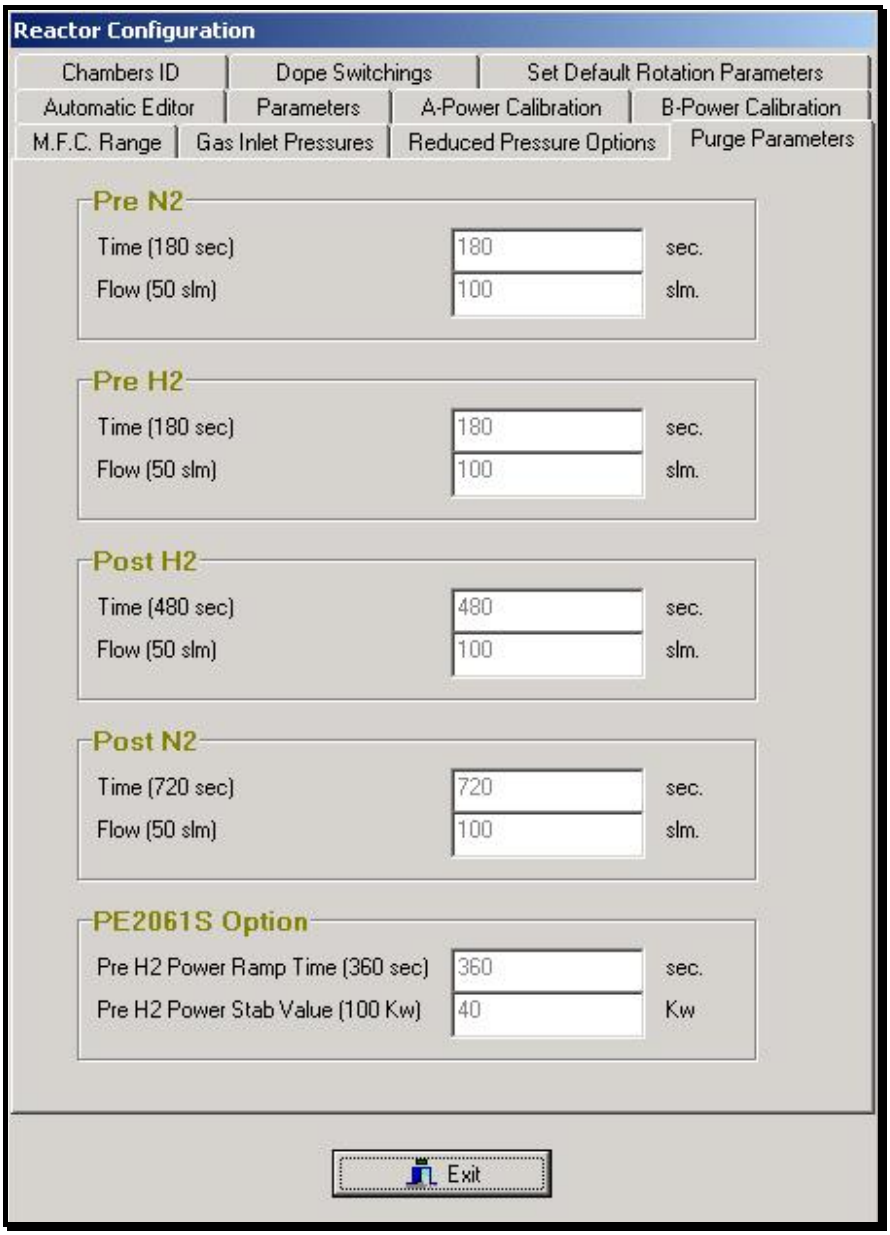

The purging cycles are:

- PRE N2
- PRE H2
- POST H2
- POST N2

These values are referred **to each chamber**. This means that the total consumption for each purging step should be consider as double.

For safety reasons it is not allowed to set values lower than:

	Flow	Time
PRE N2:	50 Slm	180 seconds
PRE H2:	50 Slm	180 seconds
POST H2:	50 Slm	480 seconds
POST N2:	50 Slm	720 seconds

In order to reduce theN2 consumption if the reactor is idle for more than one hour in PREN2 or in POST N2, (with out receiving any command from the operator), it will cut by half the N2 flow set point.
As soon the reactor receive any command from the operator it will automatically restore the flow settled on the above window.

WARNING!

FOR MOD. PE2061S ONLY

- PRE H2 Power Stab Value: this value expressed in KW set the end of the power ramp performed during the PreH2 time. Note that the beginning of the power ramp is fixed by default to 20KW and is not modifiable.
  For example:
  if this value is settled to 70KW the generator will automatically start the ramp from 20KW and finish it to 70KW.
- PRE H2 Power Ramp Time: this value expressed in second set the time on which the power ramp will be performed. Obviously the total length of the Pre H2 purging status is the addition of the Pre H2 time plus the Pre H2 power ramp time.

For every purge cycle, it is possible to set time and power. For safety reasons, it is not allowed to:
- Set time values lower than 360 sec.
- Set power values more than 100 KW.

IMPORTANT !!!

If the parameter "PRE H2 Power Stab Value" is set at 20 KW there will be no power ramp during PRE H2 and the reactor will work as a normal PE2061.

For more references see the Management chapter.

7.9.3 Parameters

This window displays some Generic parameters and the Lift Parameters.

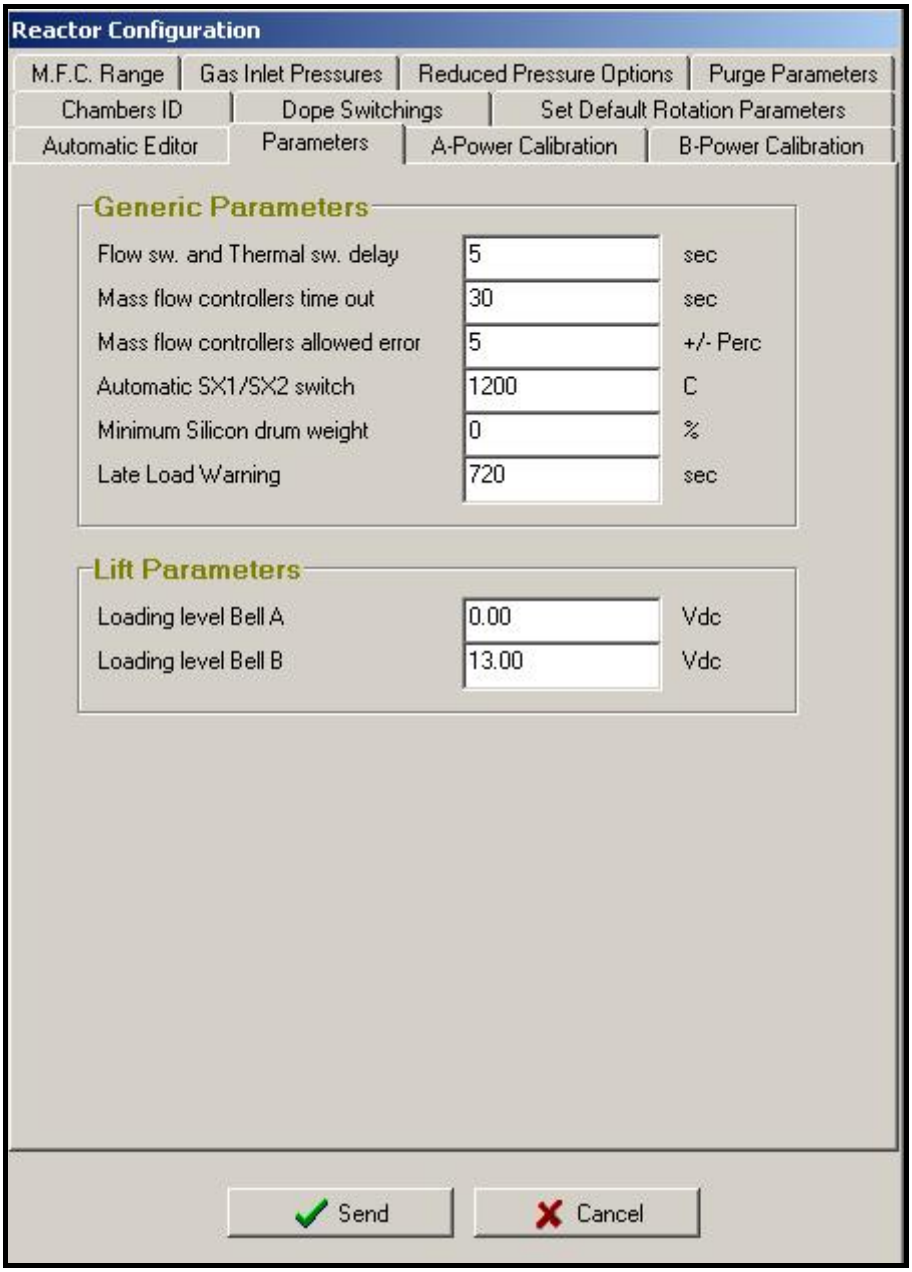

- **FLOW & THERMAL SWITCH DELAY**
  This parameter is a time in seconds to delay the intervention of the water flow and thermal switches alarms. Here follow a list of the alarms delayed from this timeout:
  - Thermal switch plate A
  - Flow switch plate A
  - Thermal switch coil A
  - Flow switch coil A
  - Thermal switch plate B
  - Flow switch plate B
  - Thermal switch coil B
  - Flow switch coil B
  - Thermal switch capacitor
  - Flow switch capacitor

  Normally the delay is set at 4 - 5 seconds. If the fault lasts for N seconds (N is the delay set value) then the flow and thermal switch related alarm will be activated and the process aborted.

- **MASS FLOW CONTROLLERS TIME OUT**
  This parameter is a time in seconds to delay the intervention of the mass flow controller warning and alarms, in order to allow to the MFC to reach the set point requested.

  Normally the delay is set at 20 –30 seconds. If the fault lasts for N seconds (N is the delay set value) then the mass flow controller related warning and alarm would be activated and the process aborted.

- **MASS FLOW CONTROLLERS ALLOWED ERROR**
  This parameter is the accepted mass flow controllers difference (in ±%) between set point and real flow.

  An alarm procedure is released if flow error exceeds the accepted difference for a time exceeding the mass flow controller time out.

- **AUTOMATIC SOURX1/SOURX2 SWITCH**
  This parameter is the temperature on which the "gas panel SOURX1/SOURX2 switch" valves will be activated during process. (See "Automatic SOURX1/SOURX2 switch" paragraph for more reference).

- **LATE LOAD WARNING**
  This parameters sets the time on which the message "Ready To Load Wafer" is displayed.
  It advise the operator that is time to load wafer in the FREE chamber, in order to don't loose the overlap time between the two chambers.

  For more references see the Management chapter.

7.9.4 A Power Calibration

This window displays the Power calibration table for station A:

- Temperature Set Point (°C).
- Power (KW).
- Real Temperature read with an external pyrometer (°C).

These values are available for each Temperature Set Point Value (800, 850, 900, 950, 1000, 1050, 1100, 1150, 1200, 1250, 1300).

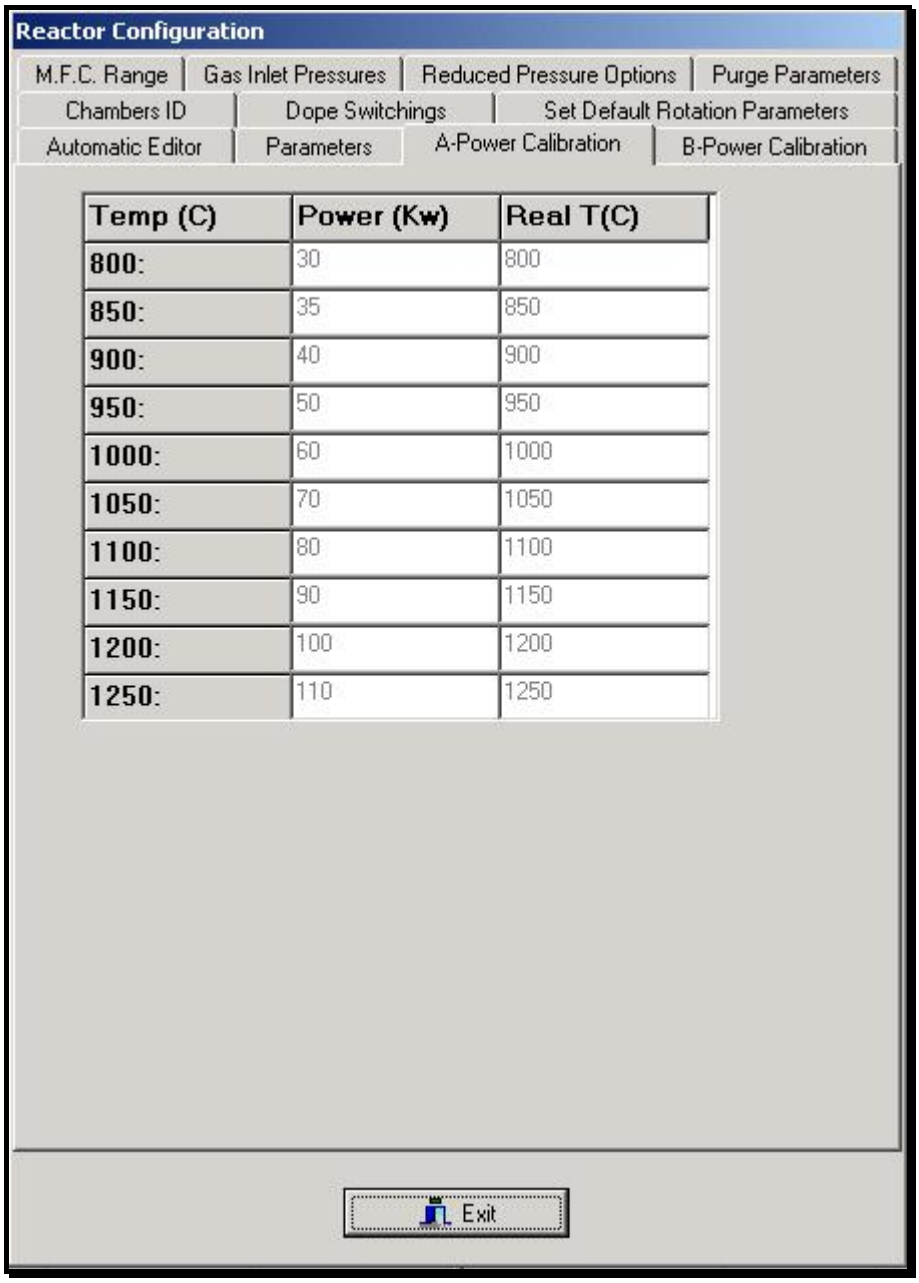

Temp (C)	Power (Kw)	Real T(C)
800:	30	800
850:	35	850
900:	40	900
950:	50	950
1000:	60	1000
1050:	70	1050
1100:	80	1100
1150:	90	1150
1200:	100	1200
1250:	110	1250

For more references see the Temperature Calibration paragraph.

7.9.5 B Power Calibration

This window displays the Power calibration table for station B:

- Temperature Set Point (°C).
- Generator Power (KW).
- Real Temperature read with an external pyrometer (°C).

These values are available for each Temperature Set Point Value (800, 850, 900, 950, 1000, 1050, 1100, 1150, 1200, 1250, 1300).

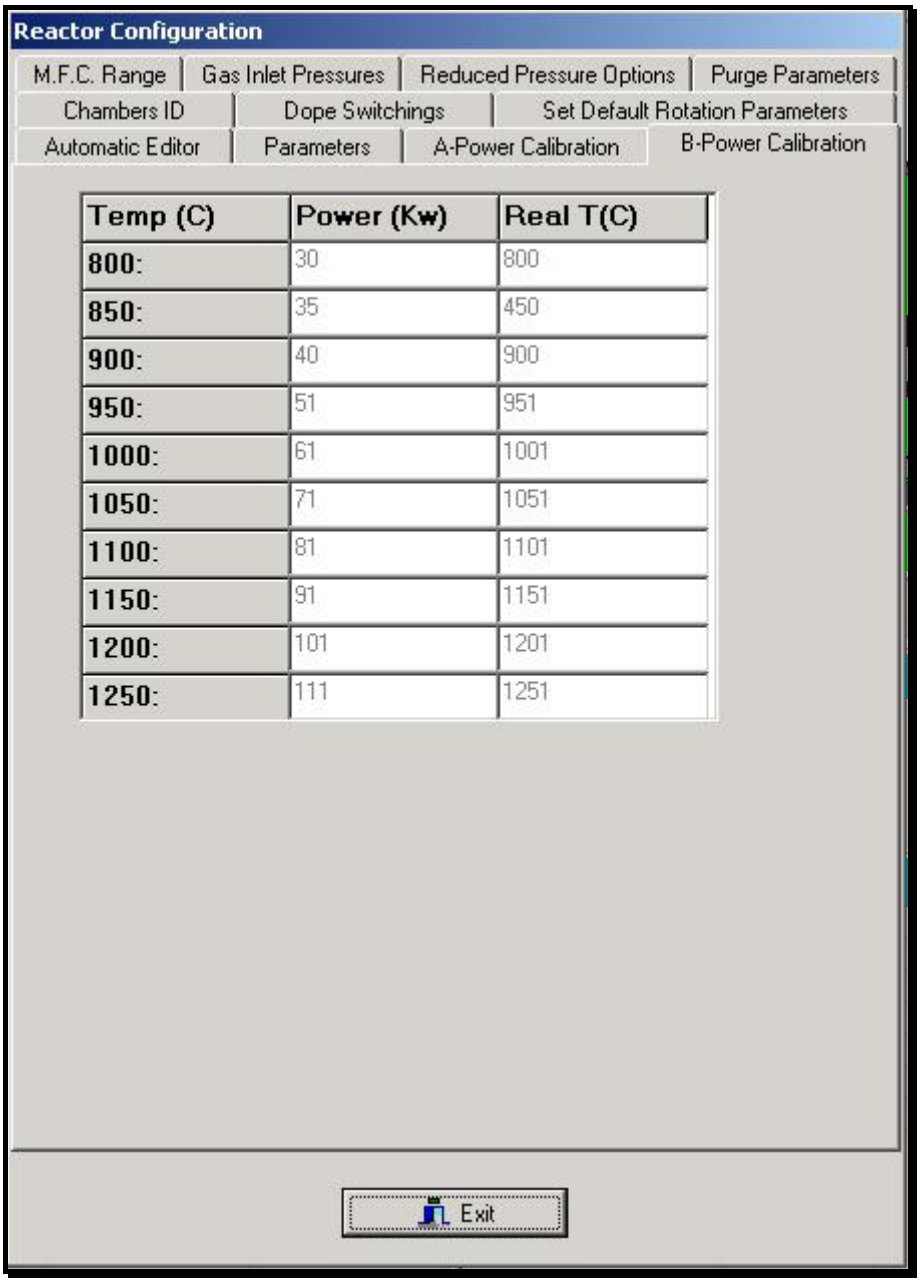

Temp (C)	Power (Kw)	Real T(C)
800:	30	800
850:	35	450
900:	40	900
950:	51	951
1000:	61	1001
1050:	71	1051
1100:	81	1101
1150:	91	1151
1200:	101	1201
1250:	111	1251

For more references see the Temperature Calibration paragraph.

7.9.6 View Set Default Rotation Parameters

This window displays the Default Rotation Parameters of station A & B

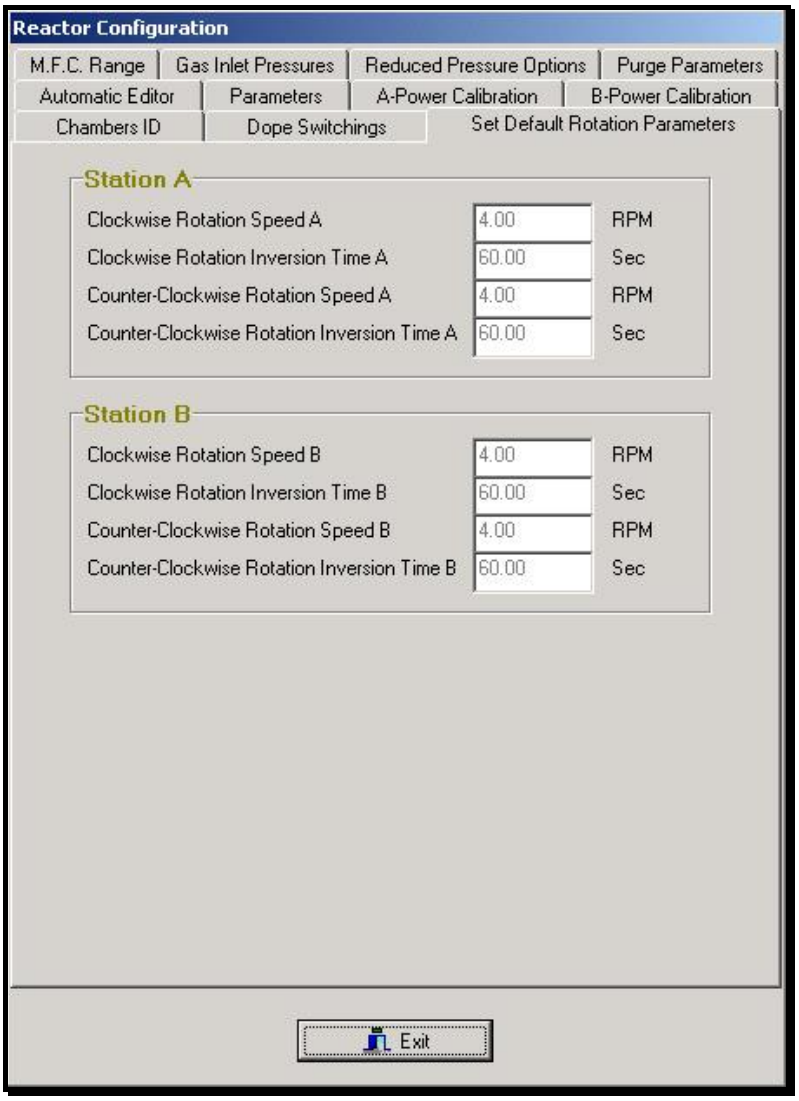

Each bell-jar can have its own rotation values as follows:

Station A

- ClockWise Rotation Speed A (Round Per Minute).
- ClockWise Rotation Inversion Time A (second).
- Counter-ClockWise Rotation Speed A (RPM).
- Counter-ClockWise Rotation Inversion Time A (sec).

Station B

- ClockWise Rotation Speed B (Round Per Minute).
- ClockWise Rotation Inversion Time B (second).
- Counter-ClockWise Rotation Speed B (RPM).
- Counter-ClockWise Rotation Inversion Time B (sec).

IMPORTANT !!!
Please note that the above rotation settings are in operation **ONLY** when the silicon or the HCl are flowing inside the bell-jar (SX1or SX2 or SX 3= BELL and HCL=BELL).
Beside this condition the susceptor ALWAYS rotates in one direction at 4 rpm without reversing.

Moreover, rotation stops after POST H2 purge and starts again at the beginning of the next run.
Summarizing:

STATUS	ROTATION PE2061	ROTATION PE2061S
PRE N2	OFF	OFF
PRE H2	OFF	ON
PROCESS (Si =/= BELL)	4 RPM (NO REVERSING)	4 RPM (NO REVERSING)
PROCESS (Si == BELL)	SET VALUES	SET VALUES
POST H2	4 RPM (NO REVERSING)	4 RPM (NO REVERSING)
POST N2	OFF	OFF

For more references see the Management paragraph.

7.9.7 Gas inlet pressures

This window displays the ranges of pressure for the following gases:

- HCL
- DOPE1
- DOPE2
- DOPE3

These values of pressure are expressed in PSI.
If the real gas pressure is out of the range settled in this window, a warning message will be displayed. (i.e. **"HCl Pressure"**).

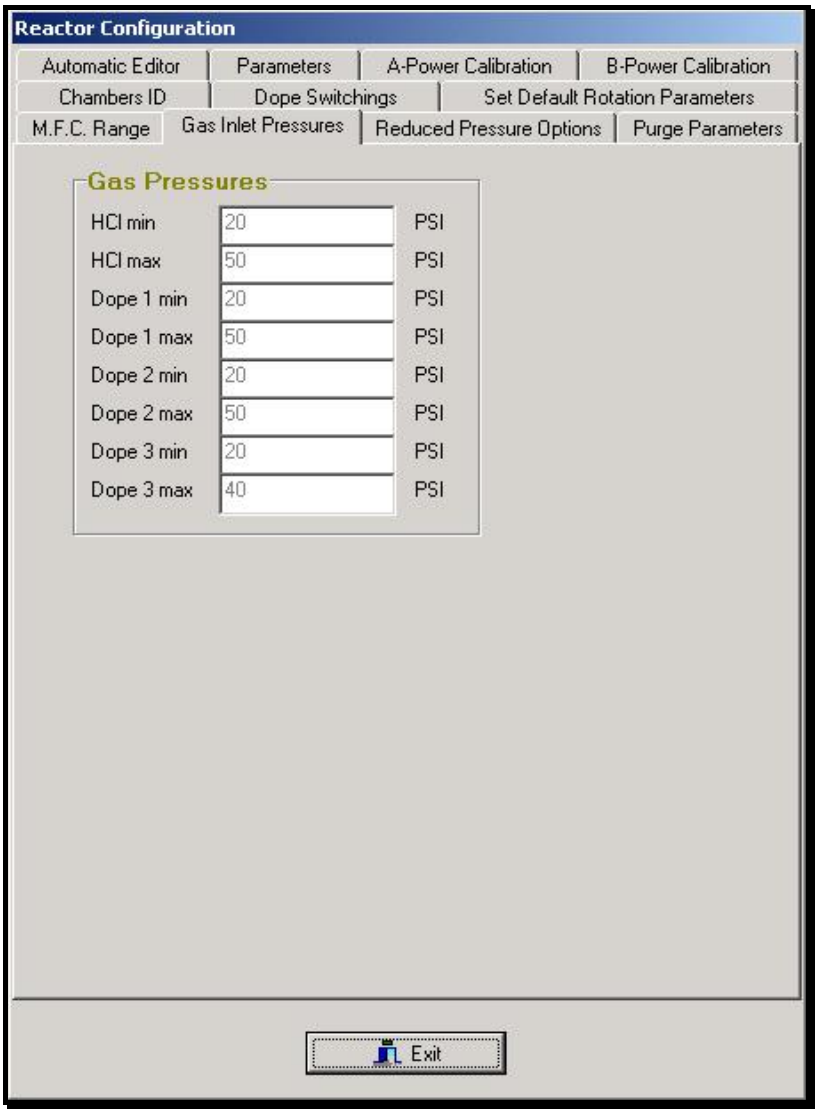

For more references see the Management paragraph.

7.9.8 Automatic Editor

This window displays the Recipes Automatic Editors parameters:

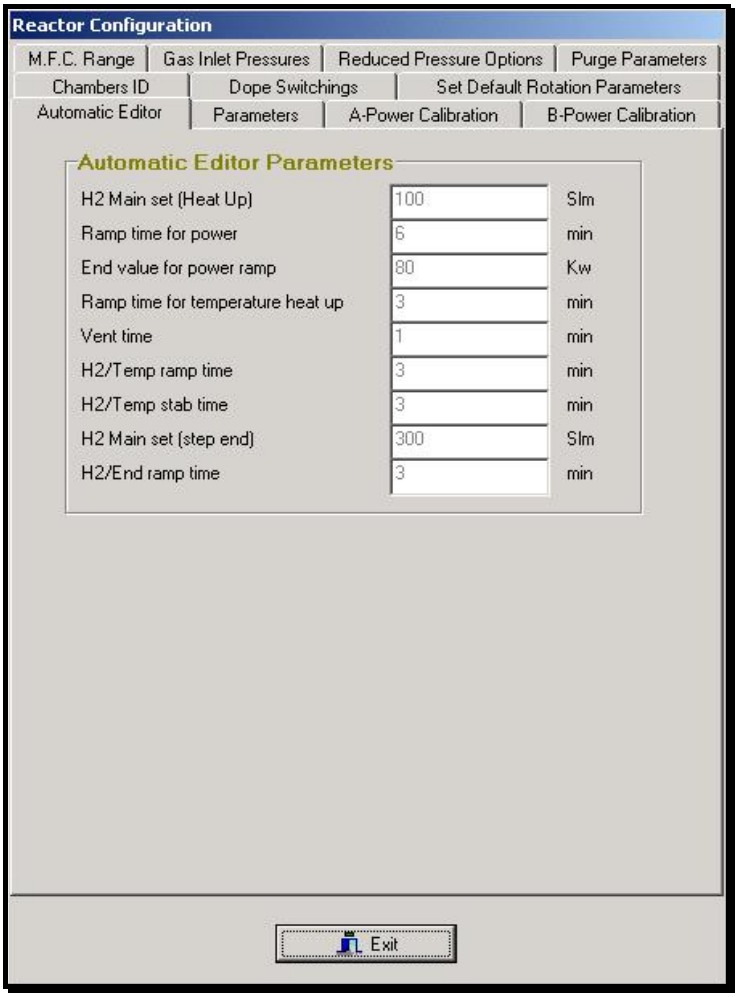

The following parameters are use from the GUI, as a base to make the recipe with the auto edit option.

- **H2 MAIN SET (HEAT UP)**
  It's the H2 value during the susceptor heat up.

- **RAMP TIME FOR POWER**
  It's the ramp time for power ramp, between start and end value.

- **END VALUE FOR POWER RAMP**
  It's the final power value after ramp.

- **RAMP TIME FOR TEMPERATURE HEAT UP**
  It's the ramp time for temperature ramp, between start and end value.

- **VENT TIME**
  It's the time in vent for all gases.

- **H2 / TEMP RAMP TIME**
  It's the ramp time for H2 main and temperature between two steps.

- **H2 / TEMP STAB TIME**
  It's stab time for H2 main and temperature after ramp (time to maintains end value).

- **H2 MAIN SET (STEP END)**
  It's the H2 set point for purge during recipe last step.

- **H2/END RAMP TIME**
  It's the ramp time if the H2 Main start value differs from the stab value in the latest recipe step.

  For more references see the Management paragraph.

7.9.9 Chamber ID

This windows displays the chambers Identification number which appears below the bell-jar picture on the main GUI page.

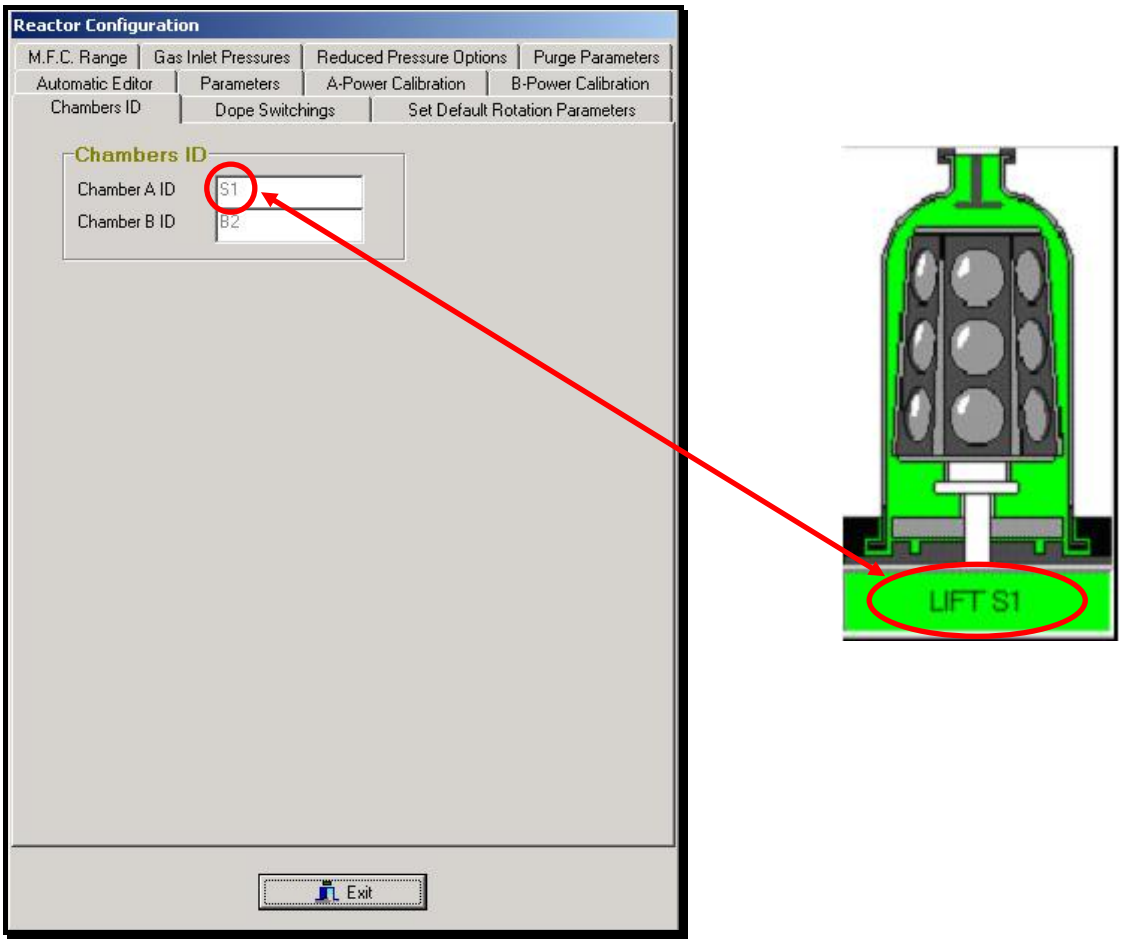

7.9.10 Dope Switching

This window displays the Smart Dopants name.

The Smarts Dopants name is related to Inject 1 and Inject 3 or Inject 1 and Inject 2 (it depends on the configuration) and appears only if the Smart Dopants option is set as available.

For more references see the Management paragraph.

7.9.11 Reduced Pressure Options

This window displays pressures parameters related to the Reduced pressure system.
These parameters are valid only if the Reduced Pressure System is available.

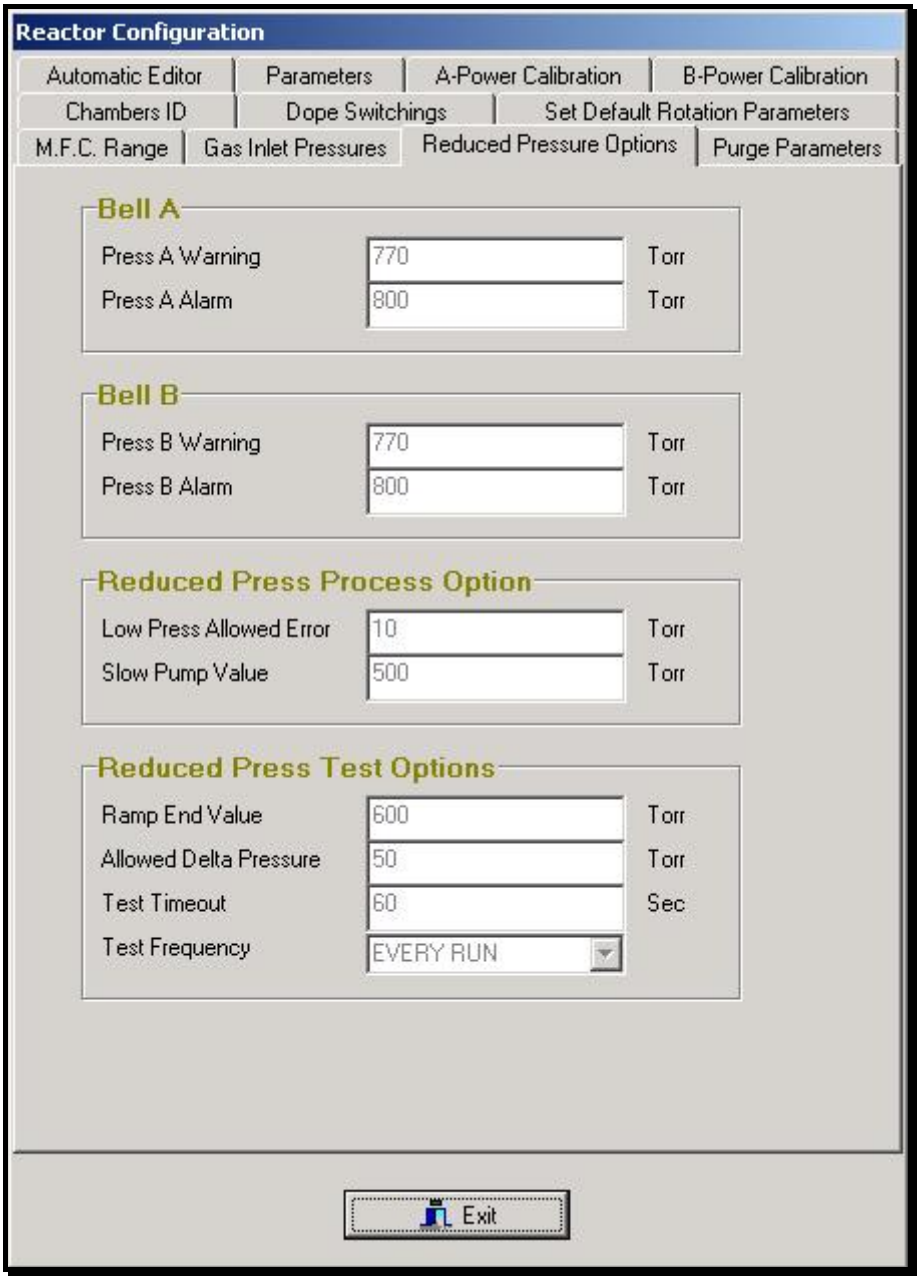

- **Bell A Pressure Warning**:
  If the value of pressure inside the chamber A exceeds this value the **"press bell A warning"** message will be displayed.

- **Bell A Pressure Alarm**:
  If the value of pressure inside the chamber A exceed this value the **"press bell A alarm"** message will be displayed and will be closed all the gases to the chamber, until the value of pressure decrease below this limit.

- **Bell B Pressure Warning**:
  If the value of pressure inside the chamber B exceeds this value the **"press bell B warning"** message will be displayed.
- **Bell B Pressure Alarm**:
  If the value of pressure inside the chamber B exceeds this value the **"press bell B alarm"** message will be displayed and will be closed all the gases to the chamber, until the value of pressure decrease below this limit.

- **Slow pump value**:
  It 's the value of pressure after which the slow pump is close.

- **Pressure allowed error**:
  It's the maximum shifting between pressure set point and the real pressure value inside the chamber. If during the process the real pressure is above or below this value, for more than one minute, the process will be aborted and the **"Low Pressure Trouble"** alarm message will be displayed.
  The above pressure parameter is controlled ONLY when the silicon is flowing inside the bell-jar (SX1or SX2 or SX 3= BELL).

Parameters related to the Reduced Pressure Test:

- **Ramp end value**
  It's the maximum shifting between pressure set point and the real pressure value.

- **Test Timeout**
  It's the test duration in seconds.

- **Test frequency**
  In this field it is possible to insert the frequency on which the test should be performed:
  - **Diagnostic:** the test can be performed only by using the apposite command on the diagnostic menu.
  - **Every run**: the test is performed automatically by the reactor each time a recipe containing a pressure line, has been executed.
  - **Every 5 runs**: the reactor every five runs containing a pressure line performs the test automatically.
    After selected this option, the test will be performed immediately the first executed recipe, containing a pressure line.
    After that, the reactor will perform other 4 recipes, containing a line of pressure, without execute the test.
    To the execution of the fifth recipe, containing a pressure line, the test will be performed again.
  - **Once a day:** The test is performed automatically by the reactor one time every 24h, with the same logic of the "every 5 runs" options.
  - **Once a week:** the reactor performs the test automatically one time every week, with the same logic of the "every 24 runs" options.

For more references see the Management chapter.

7.10 Reactor Installation

The Reactor Installation window is a multi tabs window.
Each tab includes a set of options inherent the same reactor Function.
All tabs are described in the following paragraphs.

7.10.1 Reactor Options

This window display the Reactor Options status:

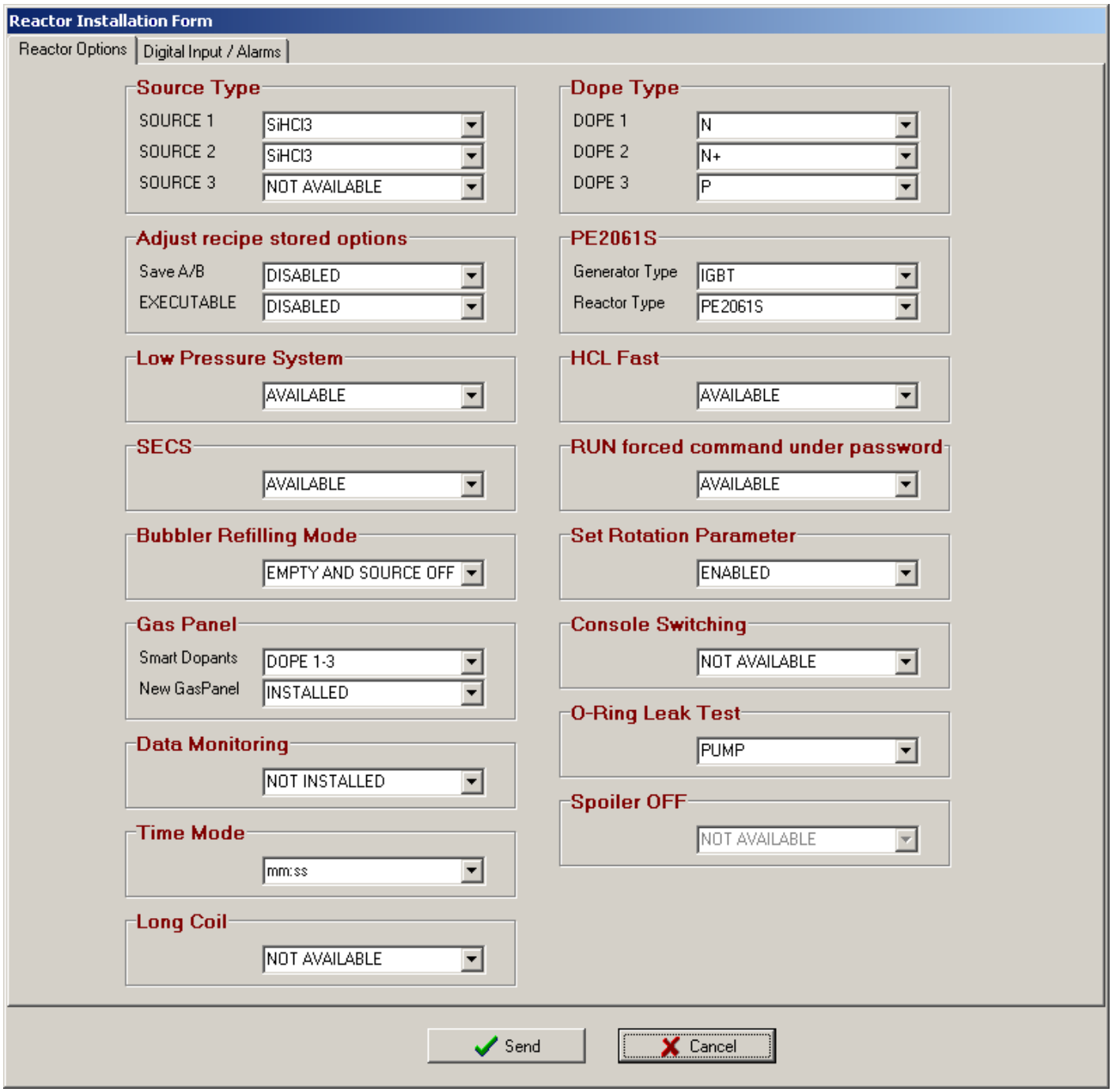

The followings options are available:

- Source type (SiHCl4 or SiHCl3 or SiH2CL2 or MFC).
- Dope type (N type or N+ type or P type or P+ type).
- Low Pressure System (available or not available).
- PE2061S options for Generator Type (IGBT or SCR).
- PE2061S options for Reactor Type (2061 or 2061S).
- SECS (available or not available).
- HCL Fast (available or not available).
- Bubbler refilling mode (Empty and source off or Empty and source on).
- RUN forced under password (enable or disable).
- Gas Panel options for Smart dopants (available or DOPE1-2 or DOPE1-3).
- Gas Panel options for New Gas Panel (installed or not installed).
- Set rotation parameter (enable or disable).
- Adjust recipe stored options for save A/B (enable or disable).
- Adjust recipe stored options for executable (enable or disable).
- Console switching (available not available).
- Data monitoring (installed or not installed).
- O-ring leak test (pump or venturi).
- Time Mode (minute and seconds or tenth of minutes).
- Spoiler OFF (available or not available).
- Long Coil. (Available or not available)

For more reference see the Management chapter.

7.10.2 Digital Input/Alarms

This window displays all reactor digital input.

The led at the left of each description gives the following information:

- **GREEN = DIGITAL INPUT CLOSED**
- **RED = DIGITAL INPUT OPEN**
- **YELLOW = DIGITAL INPUT NOT USED**

The Pull down menu at the right of each description describes the type of intervention that the reactor undertake in case the relevant digital input is triggered:

- **TYPE " W "** (WARNING)
- **TYPE " H "** (HYDROGEN)
- **TYPE " N "** (NITROGEN)

For troubleshooting purpose it is important know from where the digital inputs are coming:

- From 1 to 24 are displayed the alarm coming from A-71 board.
- From 25 to 40 are displayed the alarm coming from A-23 board.
- From 41 to 64 are displayed the alarm coming from A-43 board.

7.11 Reactor Consumption

This window summarizes some basic information about reactor.

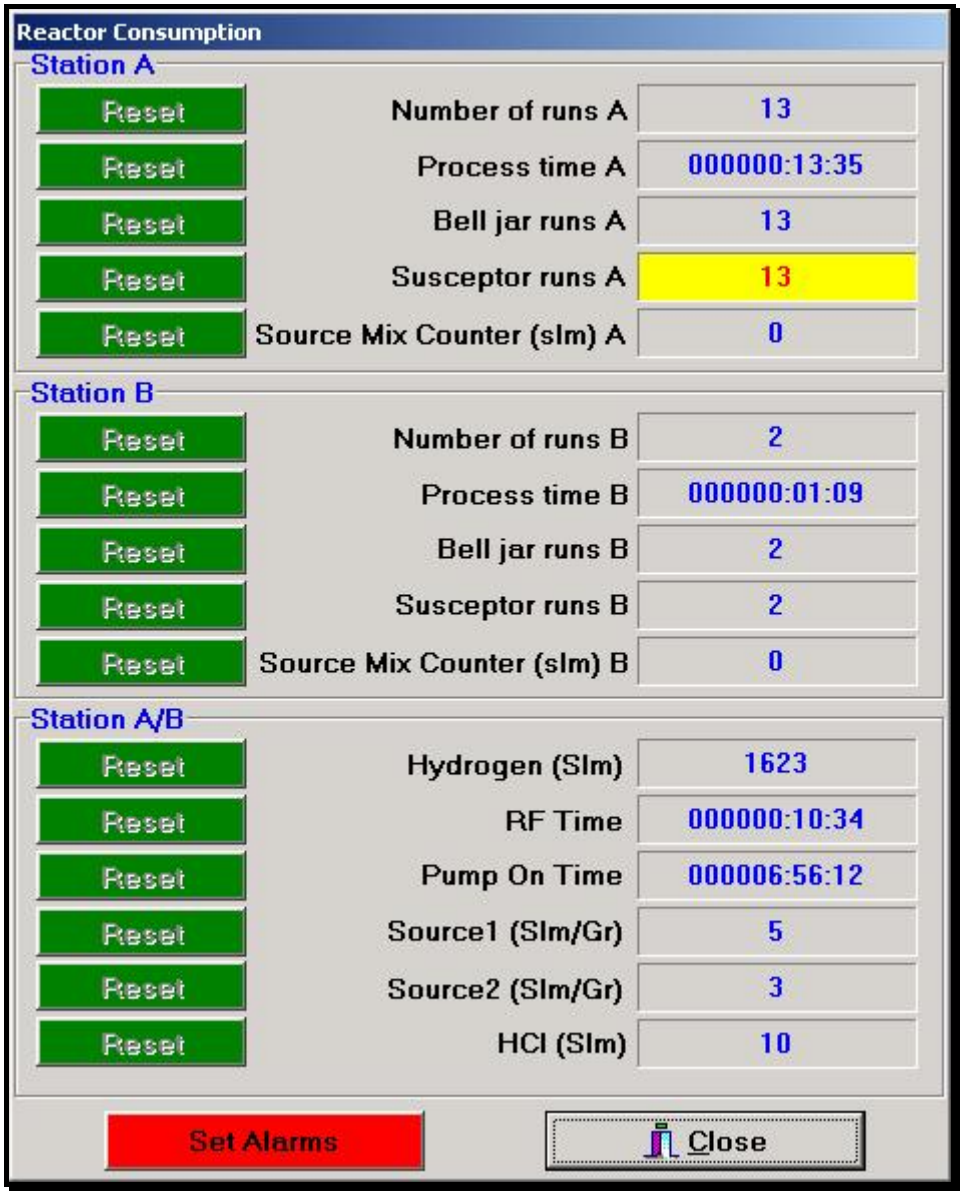

Station A

- Number of cycles on station A.
- Total time with station A in process.
- Number of A side bell-jar cycles.
- Number of A side susceptor cycles.
- Total Source consumption (either from Source 1, either from Source 2) flowing trough the station A.

Station B

- Number of cycles on station B.
- Total time with station B in process.
- Number of B side bell-jar cycles.
- Number of B-side susceptor cycles.
- Total Source consumption (either from Source 1 ,either from Source 2) flowing trough the station B.

Station A/B

- Total Hydrogen consumption (Slm).
- Total Generator time with radio frequency ON.
- Total time with the pressure pump ON.
- Total Source 1 consumption (grams).
- Total Source 2 consumption (grams).
- Total HCL consumption (Slm).

On every use of RUN command, if a threshold is exceeded, the REACTOR INFORMATION window will be displayed indicating in yellow color the thresholds exceeded.
For instance, this command is useful when making preventive maintenance every "x" hours or cycles or when changing silicon or HCl bottle every "x" kilograms or liters.

For more references see the Management chapter.

7.12 Black Box Previous Month

The black box is automatically deleted at the end of each months to maintain a file size recordable in a floppy driver.

This window shown the black box registration of the previous month in case it is necessary view a registration older than the actual recording months.

This window have all the functionality of the standard black box.
See the relevant chapter for more details.

8 File

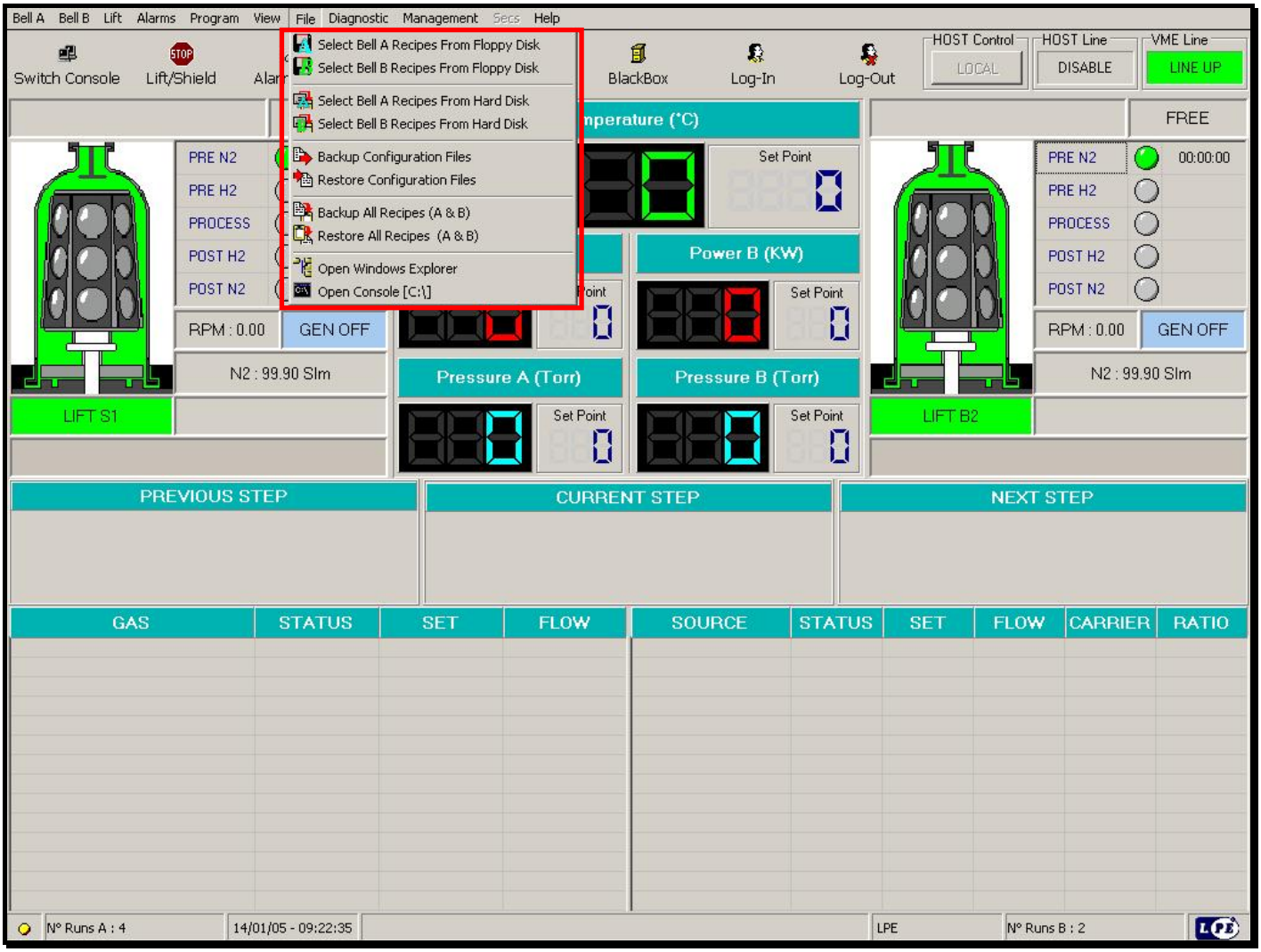

8.1 Access level to File menu

Users have different access to the File menu according to the below Access list:
LPE Level1 = Full Access.
Supervisor Level 2 = Full Access.
Maintenance Level 3 = Access only to "Select Bell A/B recipes from disk", "Select Bell A/B recipes from disk", and "Backup all recipes".
Programme Level 4 == Access only to "Select Bell A/B recipes from disk", "Select Bell A/B recipes from disk", and "Backup all recipes".
User Level 5 = No Access .

8.2 Select Bell A Recipes from Floppy Disk

This command is only for skilled engineers trained in the use of PE 2061 and PE2061S Epitaxial Reactor.
By inserting the back-up floppy disk (on which has been previously stored the recipes) in the workstation floppy disk driver, it is possible copy the recipes from the floppy disk to the workstation hard disk.

This window displays all recipes from bell A stored in the floppy disk.
The User can select a recipe by clicking twice the recipe name and:

- Press “COPY HD” button to save the selected recipe to the hard disk.
- Press “REMOVE” button to delete the selected recipe from the floppy disk.
- Press “CLOSE” to quit.

Note:
Will be also automatically saved/removed the “INFO” hidden file, related to each recipe.

8.3 Select Bell B Recipes from Floppy Disk

This command is only for skilled engineers trained in the use of PE 2061 and PE2061S Epitaxial Reactor.
By inserting the back-up floppy disk (on which has been previously stored the recipes) in the workstation floppy disk driver, it is possible copy the recipes from the floppy disk to the workstation hard disk.

This window displays all recipes from bell B stored in the floppy disk.
The User can select a recipe by clicking twice the recipe name and:

- Press “COPY HD” button to save the selected recipe to the hard disk.
- Press “REMOVE” button to delete the selected recipe from the floppy disk.
- Press “CLOSE” to quit.

Note:
Will be also automatically saved/removed the “INFO” hidden file, related to each recipe.

8.4 Select Bell A Recipes from Hard Disk

This command is only for skilled engineers trained in the use of PE 2061 and PE2061S Epitaxial Reactor.
By inserting a floppy disk, in the workstation floppy disk driver, it is possible copy the recipes from the workstation hard disk to a floppy disk.

This window displays all recipes from bell A stored in the hard disk.
The User can select a recipe by clicking twice on the recipe name and:

- Press "COPY HD" button to save the selected recipe to the floppy disk.
- Press "REMOVE" button to delete the selected recipe from the hard disk.
- Press "CLOSE" to quit.

Note:
Will be also automatically saved/removed the "INFO" hidden file, related to each recipe.
"A" station 's recipes are stored in the workstation hard disc and precisely in the directory **C:\pe2061\PProgram1.**
At each recipe is related a file" INFO".
The INFO file includes the rotation and the automatic dope switching parameters.
For example if the recipe name is: INTRINSIC.B the related file info is called INTRINSIC.INFO.B.
The file INFO is a hidden file and is not displayed in any part of the GUI.

8.5 Select Bell B Recipes From Hard Disk

This command is only for skilled engineers trained in use of PE 2061 and PE2061S Epitaxial Reactor.
By inserting a floppy disk in the workstation floppy disk driver, it is possible make a back up of the commonly used "epi" recipes.
However, it is recommended to make regularly a backup copy on floppy disks (unit A:).

This window displays all recipes from bell B stored in the hard disk.
The User can select a recipe by clicking twice on the recipe name and:

- Press "COPY A:" button to save the selected recipe to the floppy disk.
- Press "REMOUVE" button to delete the selected recipe from the hard disk.
- Press "CLOSE" to quit.

Note:
"B station 's recipes are stored in the workstation hard disc and precisely in the directory
C:\pe2061\PProgram2
At each recipe is related a file" INFO".
The INFO file includes the rotation and the automatic dope switching parameters.
For example if the recipe name is: INTRINSIC.B, the related file info is called INTRINSIC.INFO.B
The file INFO is a hidden file and is not displayed in any part of the GUI.

8.6 Backup Configuration Files

This command copies all reactor configuration files from hard disk to floppy disk (back-up).
The configuration files are never saved directly on the floppy disk.
Likewise, on reactor switch-on, the configuration files is always read from the hard disk and never from the floppy disk.

IMPORTANT!!!

It is strongly recommended to regularly make a back-up copy of the configuration files.

8.7 Restore Configuration files

This command copies the reactor configuration files file from **floppy disk to the workstation hard disk.**
This command is used when configuration files have to be replaced on the hard disk.

8.8 Backup all Recipes (A&B)

This command copies all reactor recipes from hard disk to floppy disk (back-up).
The recipes are never saved directly on the floppy disk.

IMPORTANT!!!

It is strongly recommended to regularly make a back-up copy of all recipes files.

8.9 Restore all Recipes (A&B)

This command copies all recorded recipe files file from **floppy disk to the workstation hard disk.**
This command is used when recipes files have to be replaced on the hard disk.

8.10 Open Windows Explorer

This command is only for skilled engineers trained in use of PE 2061 and PE2061S Epitaxial Reactor.
By selecting this command appears the Windows explorer window.

IMPORTANT !!!

Before to begin any operation on the terminal window, directly on the workstation operative system, is strongly recommended to wait until the reactor is IDLE (PRE N2 status)

8.11 Open Console C:\

This command is only for skilled engineers trained in use of PE 2061 and PE2061S Epitaxial Reactor and trained on DOS language.
By selecting this command will appear a terminal window where is possible to send DOS commands directly to the workstation without using the GUI.

IMPORTANT !!!

Before to begin any operation on the terminal window, directly on the workstation operative system, is strongly recommended to wait until the reactor is IDLE (PRE N2 status)

9 Diagnostic

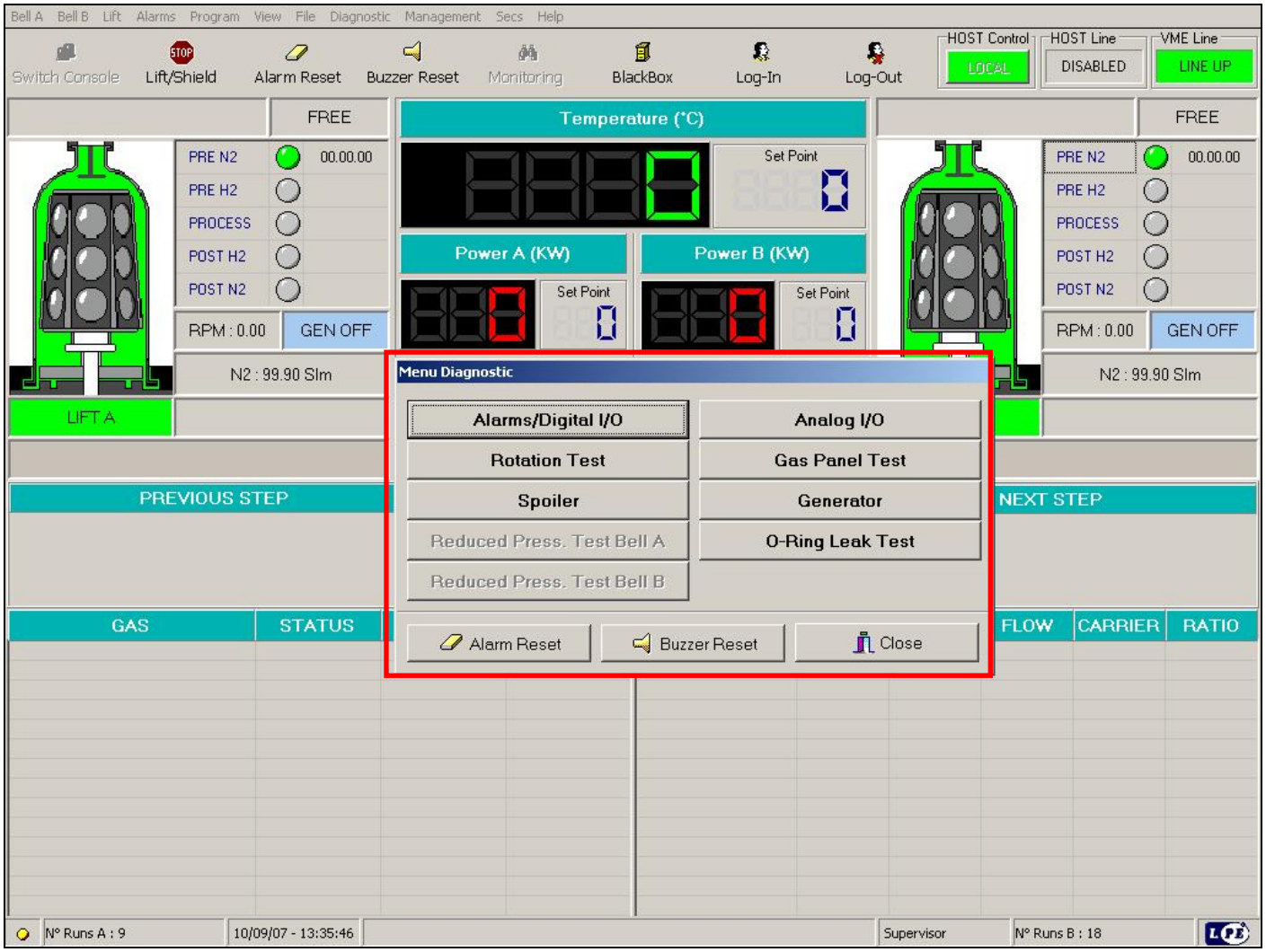

9.1 Access level to Diagnostic menu

Users have different access to the Diagnostic menu according to the below Access list:
LPE Level1 = Full Access.
Supervisor Level 2 = Full Access.
Maintenance Level 3 = Full Access.
Programme Level 4 = No Access.
User Level 5 = No Access.

It ' s possible to enter in this menu only if both bell-jar are in FREE status.

9.2 Alarms/Digital Input

This window display reactor digital input and output status.

The led at the left of each description gives the following information:

- **GREEN = DIGITAL INPUT CLOSED**
- **RED = DIGITAL INPUT OPEN**
- **YELLOW = DIGITAL INPUT NOT USED**

The Pull down menu at the right of each description describes the type of intervention that the reactor undertake in case the relevant digital input is triggered:

- **TYPE " W "** (WARNING)
- **TYPE " H "** (HYDROGEN)
- **TYPE " N "** (NITROGEN)

For troubleshooting purpose it is important know from where the digital inputs are coming:

- From 1 to 24 are displayed the alarm coming from A-71 board.
- From 25 to 40 are displayed the alarm coming from A-23 board.
- From 41 to 64 are displayed the alarm coming from A-43 board.

The led at the left of each description gives the following information:

- **GREEN = DIGITAL OUTPUT CLOSED**
- **RED = DIGITAL OUTPUT OPEN**

For more references see Management Chapter.

CONFIDENTIAL - Property of LPE S.p.A. - Any reproduction or disclosure forbidden without explicit consent of LPE S.p.A.

9.3 Analog I/O

This Multi tab window displays voltage across analog inputs and outputs as follows.

Analog Inputs:

001	SX1 CARRIER	0.16
002	SX1	0.00
003	SX1 RATIO	0.16
004	FC3 N2	0.33
005	FC80 HCl	0.00
006	FC51 DILUTE1	0.00
007	FC2 H2 PURGE	0.25
008	FC1 H2 MAIN	0.00
009	SX2 CARRIER	0.16
010	SX2	0.00
011	SX2 RATIO	0.16
012	FC63 DOPE2	0.00
013	FC52 INJECT1	0.00
014	FC53 DOPE1	0.00
015	FC62 INJECT2	0.00
016	FC61 DILUTE2	0.00
017	LIFT POTENTIOMETER A	0.16
018	PYROMETER A	64.61
019	LIFT POTENTIOMETER B	0.16
020	PYROMETER B	64.61
021	FC71 DILUTE3	0.00
022	FC72 INJECT3	0.00
023	FC83 HCl FAST	0.00
024	FC73 DOPE3	0.00
025	HCl PRESSURE	0.16
026	DOPE1 PRESSURE	0.16
027	DOPE2 PRESSURE	0.16
028	DOPE3 PRESSURE	0.16
029	SILICON DRUM WEIGHT	0.16
030	VACUUM A	0.16
031	VACUUM B	0.16
032	NOT USED	0.16
033	NOT USED	0.16
034	NOT USED	0.16
035	NOT USED	0.16
036	NOT USED	0.16
037	FC17 H2 ROT. PURGE	0.00
038	FC85 HCL ROT. PURGE	0.00

- Source 1 Carrier (from 0 to 5 Vdc)
- Source 1 (from 0 to 5 Vdc)
- Source 1 Ratio (from 0 to 5 Vdc)
- FC 3 N2 (from 0 to 5 Vdc)
- FC 80 HCl (FC 80 *) (from 0 to 5 Vdc)
- FC 51 Dilute 1 (from 0 to 5 Vdc)
- FC 2 H2 Purge (from 0 to 5 Vdc)
- FC 1 H2 Main (from 0 to 5 Vdc)
- Source 2 Carrier (from 0 to 5 Vdc)
- Source 2 Grams (from 0 to 5 Vdc)
- Source 2 Ratio (from 0 to 5 Vdc)
- FC 63 Dope 2 (from 0 to 5 Vdc)
- FC 52 Inject 1 (from 0 to 5 Vdc)
- FC 53 Dope 1 (from 0 to 5 Vdc)
- FC 62 Inject 2 (from 0 to 5 Vdc)
- FC 61 Dilute 2 (from 0 to 5 Vdc)
- Potentiometer Lift A (from 0.5 to 14 Vdc)
- Pyrometer A (from 0 to 14.5 Vdc)
- Potentiometer Lift B (from 0.5 to 14 Vdc)
- Pyrometer B (from 0.5 to 13.5 Vdc)
- FC 71 Dilute 3 (from 0 to 5 Vdc)
- FC 72 Inject 3 (from 0 to 5 Vdc)
- Source 3 (FC 83 *) (from 0 to 5 Vdc)
- FC 73 Dope 3 (from 0 to 5 Vdc)
- Pressure HCl (from 0 to 10Vdc)
- Pressure DOPE 1 (from 0 to 10Vdc)
- Pressure DOPE 2 (from 0 to 10 Vdc)
- Pressure DOPE 3 (from 0 to 10 Vdc)
- Silicon Weight (from 0 to 10 Vdc)
- Vacuum A (from 0 to 10 Vdc)
- Vacuum B (from 0 to 10 Vdc)
- FC 17 H2 Rot. Purge (from 0 to 5 Vdc)
- FC 85 HCl Rot. Purge (from 0 to 5 Vdc)

Note (*): depending on whether HCl FAST is available see Reactor Installation in Chapter **MANAGEMENT.**

Analog output:

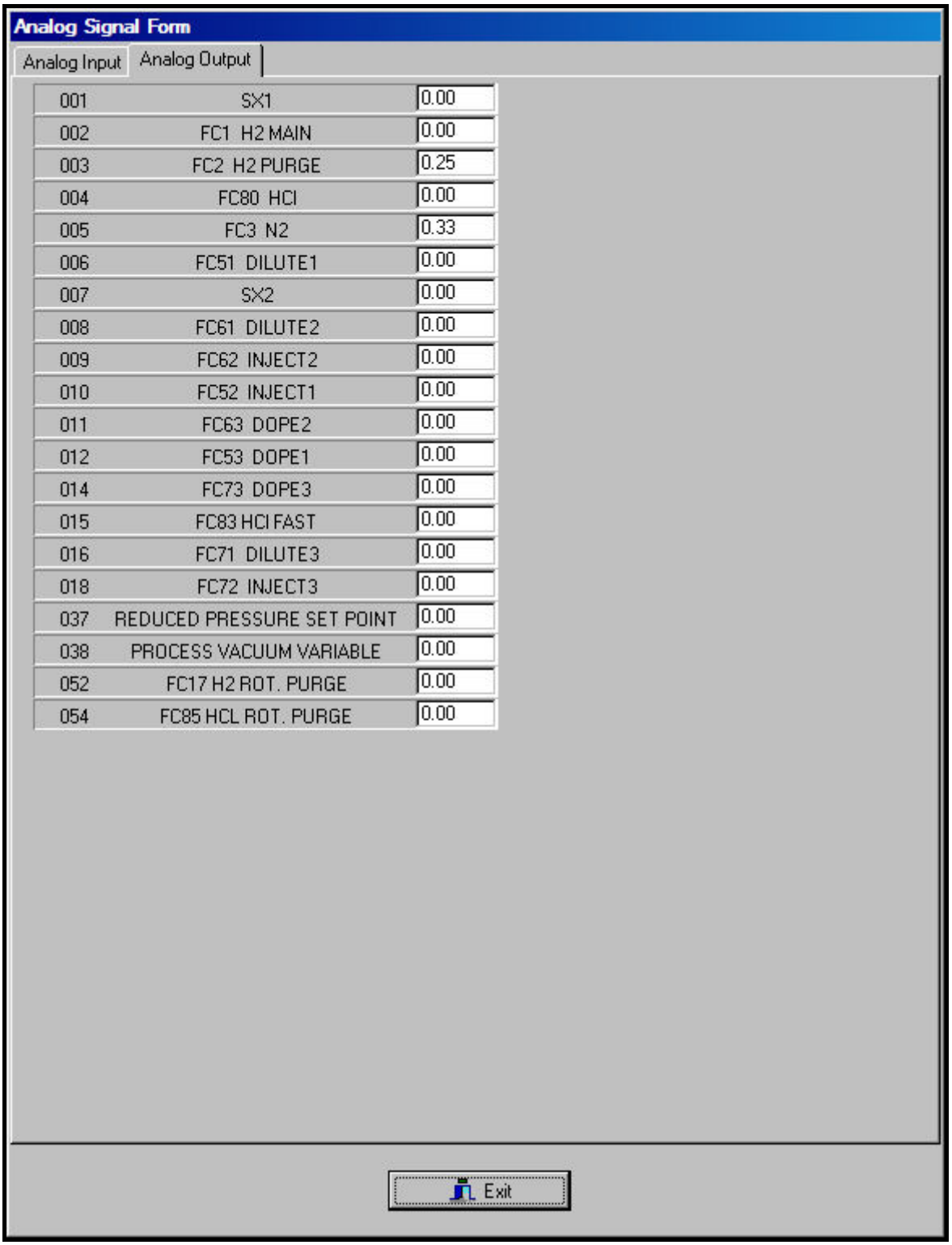

001	SX1	0.00
002	FC1 H2 MAIN	0.00
003	FC2 H2 PURGE	0.25
004	FC80 HCl	0.00
005	FC3 N2	0.33
006	FC51 DILUTE1	0.00
007	SX2	0.00
008	FC61 DILUTE2	0.00
009	FC62 INJECT2	0.00
010	FC52 INJECT1	0.00
011	FC63 DOPE2	0.00
012	FC53 DOPE1	0.00
014	FC73 DOPE3	0.00
015	FC83 HCl FAST	0.00
016	FC71 DILUTE3	0.00
018	FC72 INJECT3	0.00
037	REDUCED PRESSURE SET POINT	0.00
038	PROCESS VACUUM VARIABLE	0.00
052	FC17 H2 ROT. PURGE	0.00
054	FC85 HCL ROT. PURGE	0.00

- Source 1 (from 0 to 5 Vdc)
- FC 1 H2 Main (from 0 to 5 Vdc)
- FC 2 H2 Purge (from 0 to 5 Vdc
- FC 80 HCl (FC 80 *) (from 0 to 5 Vdc)
- FC 3 N2 (from 0 to 5 Vdc)
- FC 51 Dilute 1 (from 0 to 5 Vdc)
- Source 2 Grams (from 0 to 5 Vdc)
- FC 61 Dilute 2 (from 0 to 5 Vdc)
- FC 62 Inject 2 (from 0 to 5 Vdc)
- FC 52 Inject 1 (from 0 to 5 Vdc)
- FC 63 Dope 2 (from 0 to 5 Vdc)
- FC 53 Dope 1 (from 0 to 5 Vdc)
- FC 73 Dope 3 (from 0 to 5 Vdc)
- Source 3 (FC 83 *) (from 0 to 5 Vdc)
- FC 71 Dilute 3 (from 0 to 5 Vdc)
- FC 72 Inject 3 (from 0 to 5 Vdc)
- Reduced pressure Set Point (from 0 to 10 Vdc)
- Process Vacuum Variable (from 0 to 10 Vdc)
- FC 17 H2 Rot. Purge (from 0 to 5 Vdc)
- FC 85 HCl Rot. Purge (from 0 to 5 Vdc)

9.4 Rotation Test

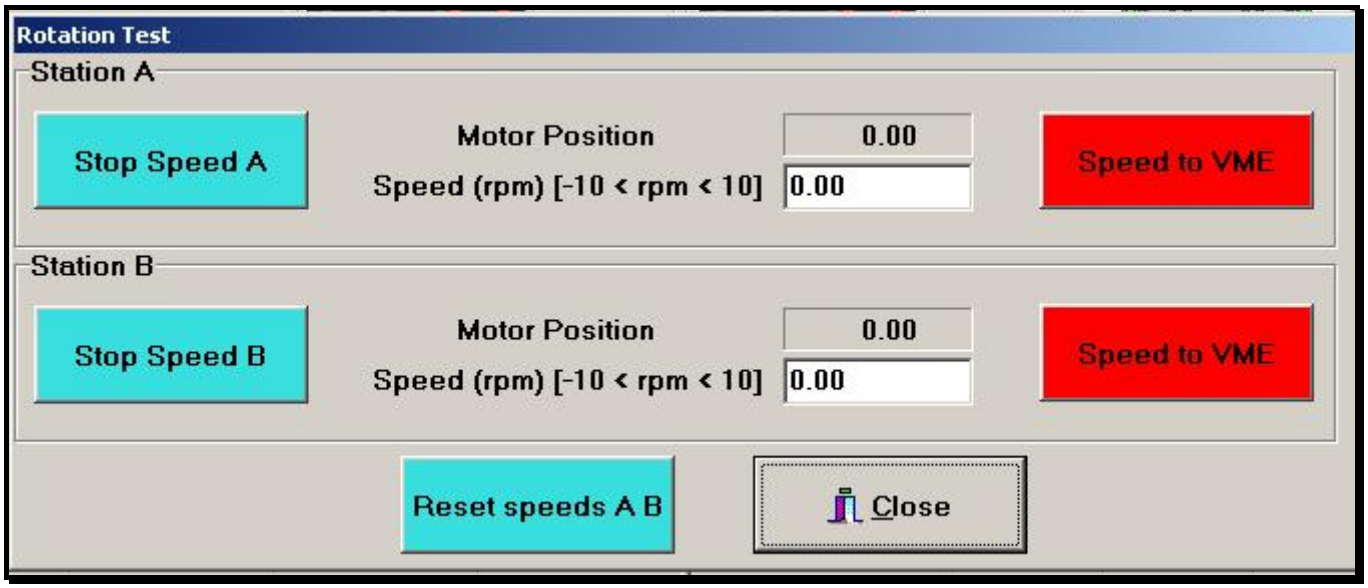

This command is used to check functioning of rotation unit.

It is possible to select motor A or B using the mouse.
It is possible to increase/decrease rotation speed by the following procedure:

- Click on the desired bell SPEED input field
- Input the speed value
- Confirm the input clicking "Speed to VME" button.

Rotation speed range -10.00 rpm to +10.00 rpm.

Negative speed means counterclockWise rotation.
The "Stop speed A" and "Stop speed B" buttons are provided to allow User to stop motors' rotation.
Motors' rotation is however stopped when quitting the menu by the Close command.
On the "Motor position" field is displayed the feedback from the photocell mounted on rotation pulley. It is shown a variation number that goes from 0 to 9999. The zero position is given by rotation photocell when detect the cut on rotation pulley.

RESET SPEED A/B BUTTON

This command resets rotation motors (zero position).

This command is enabled only when BOTH bell-jars are closed and in Nitrogen purge (does not matter if PRE or POST N2).

9.5 Gas Panel Test

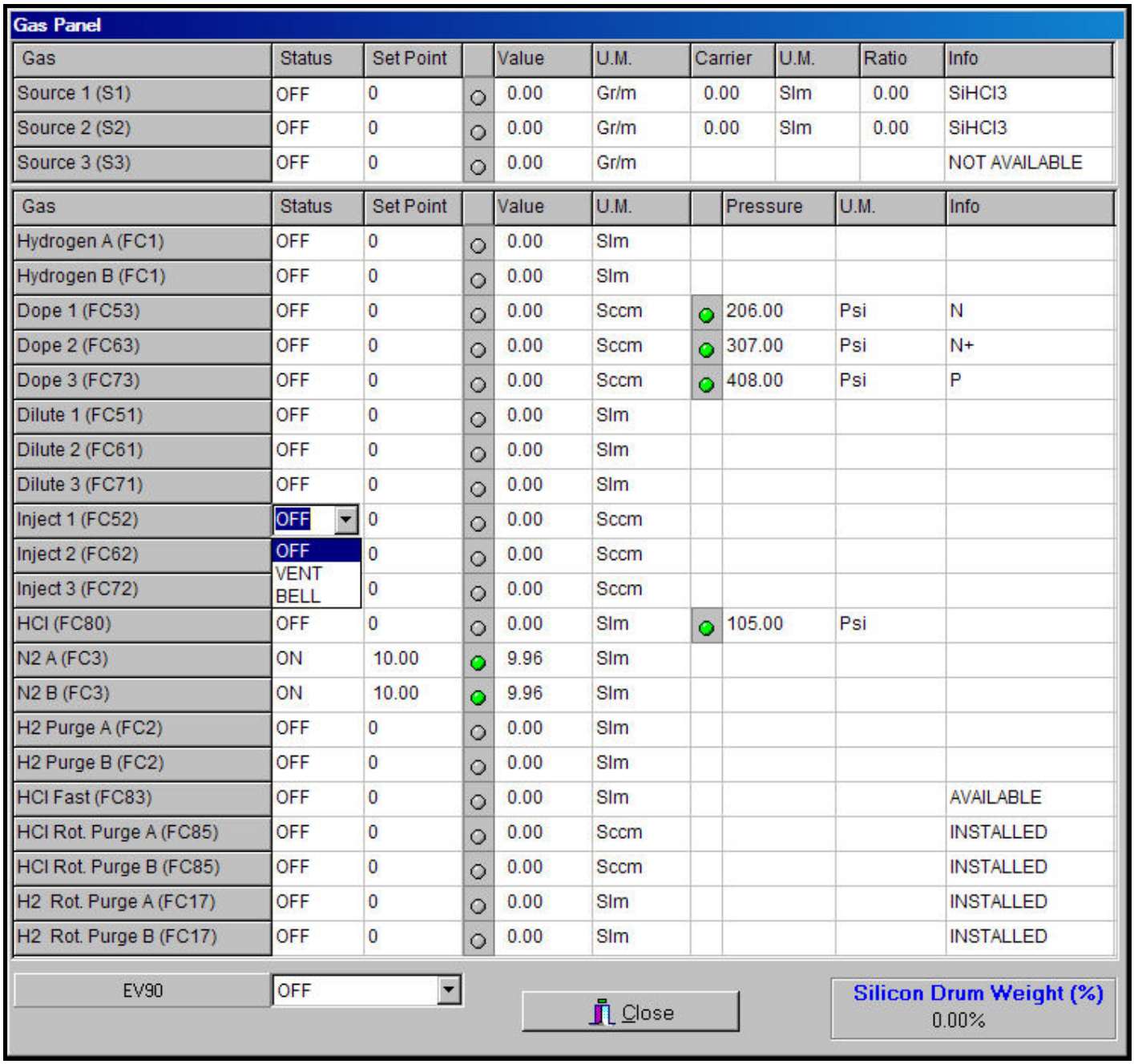

Gas Panel

Gas	Status	Set Point		Value	U.M.	Carrier	U.M.	Ratio	Info
Source 1 (S1)	OFF	0		0.00	Gr/m	0.00	Slm	0.00	SiHCl3
Source 2 (S2)	OFF	0		0.00	Gr/m	0.00	Slm	0.00	SiHCl3
Source 3 (S3)	OFF	0		0.00	Gr/m				NOT AVAILABLE

Gas	Status	Set Point		Value	U.M.		Pressure	U.M.	Info
Hydrogen A (FC1)	OFF	0		0.00	Slm				
Hydrogen B (FC1)	OFF	0		0.00	Slm				
Dope 1 (FC53)	OFF	0		0.00	Sccm		206.00	Psi	N
Dope 2 (FC63)	OFF	0		0.00	Sccm		307.00	Psi	N+
Dope 3 (FC73)	OFF	0		0.00	Sccm		408.00	Psi	P
Dilute 1 (FC51)	OFF	0		0.00	Slm				
Dilute 2 (FC61)	OFF	0		0.00	Slm				
Dilute 3 (FC71)	OFF	0		0.00	Slm				
Inject 1 (FC52)	OFF	0		0.00	Sccm				
Inject 2 (FC62)	OFF	0		0.00	Sccm				
Inject 3 (FC72)	VENT	0		0.00	Sccm				
HCl (FC80)	BELL	0		0.00	Slm		105.00	Psi	
N2 A (FC3)	ON	10.00		9.96	Slm				
N2 B (FC3)	ON	10.00		9.96	Slm				
H2 Purge A (FC2)	OFF	0		0.00	Slm				
H2 Purge B (FC2)	OFF	0		0.00	Slm				
HCl Fast (FC83)	OFF	0		0.00	Slm				AVAILABLE
HCl Rot. Purge A (FC85)	OFF	0		0.00	Sccm				INSTALLED
HCl Rot. Purge B (FC85)	OFF	0		0.00	Sccm				INSTALLED
H2 Rot. Purge A (FC17)	OFF	0		0.00	Slm				INSTALLED
H2 Rot. Purge B (FC17)	OFF	0		0.00	Slm				INSTALLED

EV90 OFF

Close

Silicon Drum Weight (%) 0.00%

This window shows status, set point and current readings of all gases. To quit this window, press the CLOSE button and all gases will be automatically shut-off and Nitrogen will flow in both chambers.

Here follow a list of all commands available in the gas panel test window:

GAS	Possible status
H2Main A	ON-OFF
H2Main B	ON-OFF
Source 1	VENT-BELL-OFF
Source 2	VENT-BELL-OFF
Source 3	VENT-BELL-OFF
Dope 1	VENT-BELL-OFF (driven by INJECT1)
Dope 2	VENT-BELL-OFF (driven by INJECT2)
Dope 3	VENT-BELL-OFF (driven by INJECT3)
Dilute 1	ON-OFF
Dilute 2	ON-OFF
Dilute 3	ON-OFF
Inject 1	VENT-BELL-OFF
Inject 2	VENT-BELL-OFF
Inject 3	VENT-BELL-OFF
HCl	VENT-BELL-OFF
N2 A	ON-OFF
N2 B	ON-OFF
H2 Purge A	ON-OFF
H2 Purge B	ON-OFF
HCl FAST	ON-OFF
HCl Rot. Purge A	ON-OFF
HCl Rot. Purge B	ON-OFF
H2 Rot. Purge A	ON-OFF
H2 Rot. Purge B	ON-OFF
EV90	ON-OFF

The default set point for a gas in OFF status is 10 % of full scale value.

9.5.1 How to change status

Select with the mouse the desired gas by clicking on his relevant status field and a pull down menu appears where is possible change the status.

Note:

- H2 Main, H2 Purge and N2 can ONLY be set to ON status, the computer will automatically correct the status of the two other gases. For instance, if H2 MAIN is switched on, H2 PURGE and N2 will be switched off, and so on.

Command		H2 Main	H2 Purge	N2
H2 Main	ON	ON	OFF	OFF
H2 Purge	ON	OFF	ON	OFF
N2	ON	OFF	OFF	ON

- It is not possible to change the status to the Dope lines, because the dope line is driven by the inject line.
  EXAMPLE: To activate the dope 1 line, press inject 1 button and the dope 1 line will automatically follow the inject 1 status (VENT-BELL-OFF)
  However it is possible to give different set points to the Inject and Dope mass flow controller.

- EV90 button is used to command manually the "Automatic SOURX1/SOURX2 switch" if available. For more information see the "Automatic SOURX1/SOURX2 switch" paragraph.

In order to better understand what action the reactor take at each command, here follow the *valves command table*:

COMMANDS	ON	VENT	BELL	NOTE
H2 main A	V7			
H2 main B	V8			
SOURCE 1		V23	V22	
SOURCE 2		V33	V32	
SOURCE 3		V42	V41	
DOPE 1				
DOPE 2				
DOPE 3				
DILUTE 1	V51			
DILUTE 2	V61			
DILUTE 3	V71			
INJECT 1		V54	V53	
INJECT 2		V64	V63	
INJECT 3		V74	V73	
HCL		V82	V81	
N2 A	V1 /V9 / V11			V9 is n.o. valve
N2 B	V1/ V10 / V12			V10 is n.o. valve
H2 purge A	V3 / V5			
H2 purge B	V4 / V6			
HCL FAST			V83 / V14	
HCL Rot. Purge A	V85 / V15			
HCL Rot. Purge B	V85 / V16			
H2 Rot. Purge A	V17 / V15			
H2 Rot. Purge B	V17 / V16			

Please use as reference the gas panel scheme RH5141U1 included in the reactor manual.

How to change set points

Select with the mouse the desired gas set point field, and click two times the left mouse button until the set point field appears pointed out. Insert the new set point and press the ENTER key.
If the new set point exceeds the maximum accepted value settled in the Management → Reactor Configuration → MFC Range, menu a denying message appears.
Please note that it is not possible to modify the set point of a gas in the OFF status.

The led near each reading field shown, when his relevant command is activated, if the feedback from the mass flow controller match with the given set point.
Consider this simple example to better understand how change status the mass flow controllers feed back led:
Set point = 100 slm
Mass flow controller allowed error = ± 5%

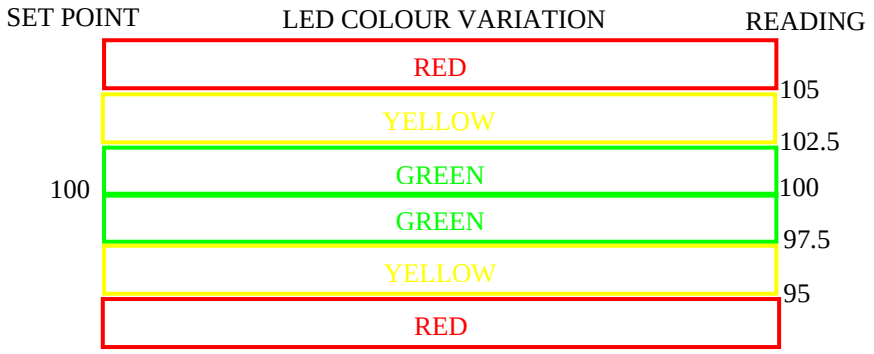

The Mass flow controller allowed error is settled in the Management → Reactor Configuration → Parameters, menu. See the "Management" chapter for more information.

Peculiarity of source1/2/3 commands

Please consider that, the source command line, if the gas panel is equipped with Source vaporizer, can display also the feedback of the H2 carrier and Mix ratio. The Management → Reactor Configuration → Reactor Options → Source Type should be set as SiHCl4 or SiHCl3 or SiH2CL2.

Otherwise if the gas panel is equipped only with Mass Flow Controllers it is not necessary to monitor the feedback of the H2 carrier and Mix ratio. The Management → Reactor Configuration → Reactor Options → Source Type should be set as MFC.

Pressure column

The pressure column shown the pressure transducer feedback (in PSI) from the following line:

- Dope1
- Dope2
- Dope3
- HCL

The led near each pressure reading field, shown if the feedback from the pressure traducer is included in the range settled in the "Gas Inlet Pressures" menu. (Management → Reactor Configuration → Gas Inlet Pressures). See the "Management" chapter for more information.
The led is red if the feedback is outside this range and vice versa is green if inside.

Source dope type

This column is a helpful reminder of dope and source gas panel configuration.

Silicon drum weight

This field shown the feedback from a drum, which detect the weight of the main silicon thank that supply reactor bubbler. A warning message will be released if this value is above the "Minimum Silicon Drum Weight" settled in the Management → Reactor Configuration → Parameters menu.

9.5.2 Gas Panel Test with the "Automatic DOPE1/DOPE3 OR DOPE1/DOPE2 switch"

DOPE1/DOPE3
If is available the Automatic DOPE1/DOPE3 switch the gas panel test window will change as shown in this picture (see "Automatic DOPE1/DOPE3 switch" chapter for more references):

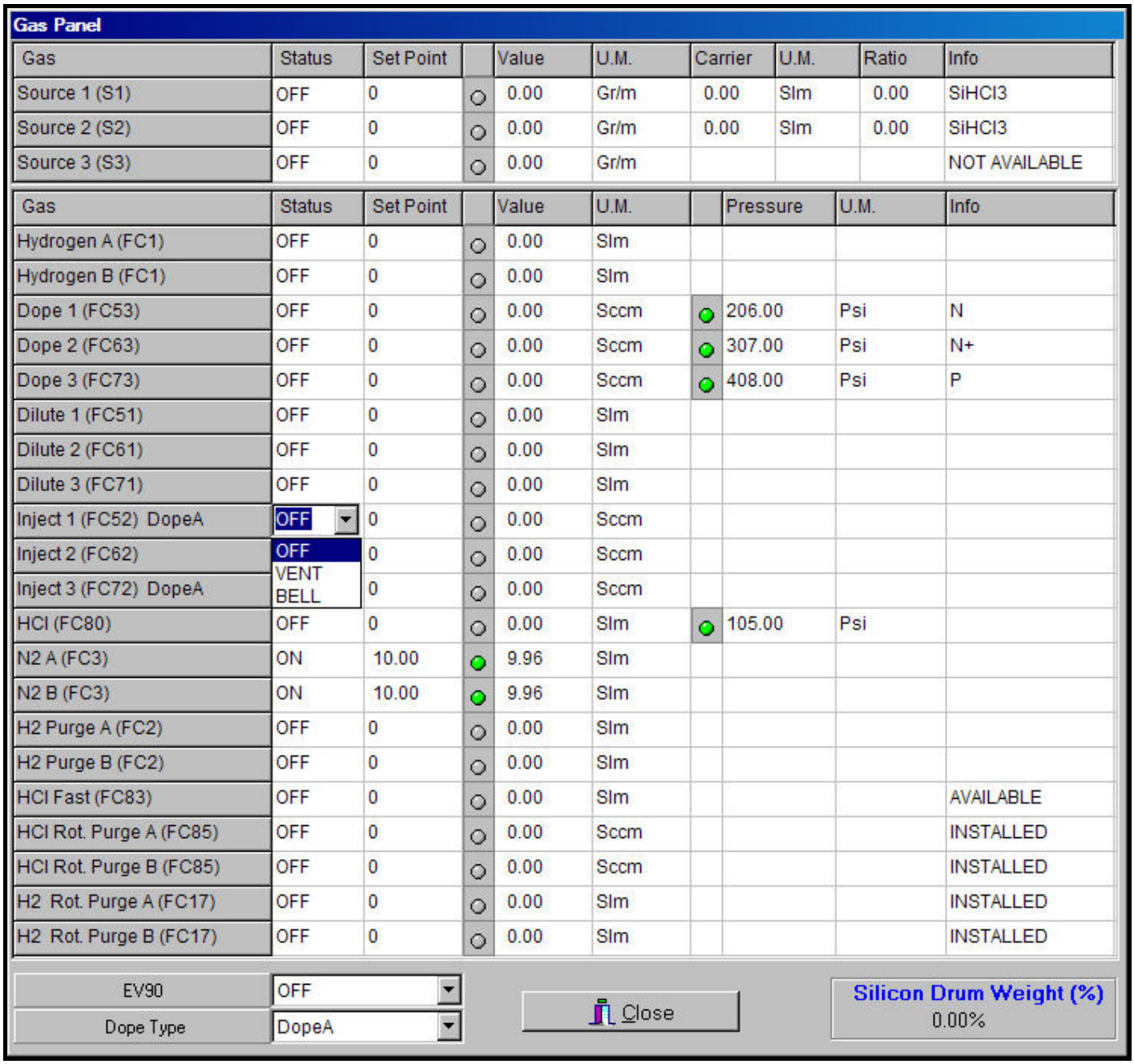

All the commands and relevant function are the same than in the standard gas panel test window described above.
The only difference is that is possible command the "Automatic DOPE1/DOPE3 switch" by using the dope type button.

Note:

- It is possible use the dope type button only if the INJECT 1 or the INJECT 3 are in the OFF status.
- The selected dope is shown in the dope type button and near the relevant inject command.

The electric valves activation command table will change only for the INJECT 1 and for the INJECT 3 as follow:

COMMAND	ON	VENT	BELL	NOTE
INJECT 1 DopeA		V75 /V54	V75 /V53	
INJECT 1 DopeB		V55 /V54	V55 / V53	
INJECT 2		V64	V63	
INJECT 3 DopeA		V75 / V74	V75 / V73	
INJECT 3 DopeB		V55 / V74	V55 / V74	

DOPE1/DOPE2

If is available the Automatic DOPE1/DOPE2 switch the gas panel test window will change as shown in this picture (see "Automatic DOPE1/DOPE2 switch" chapter for more references):

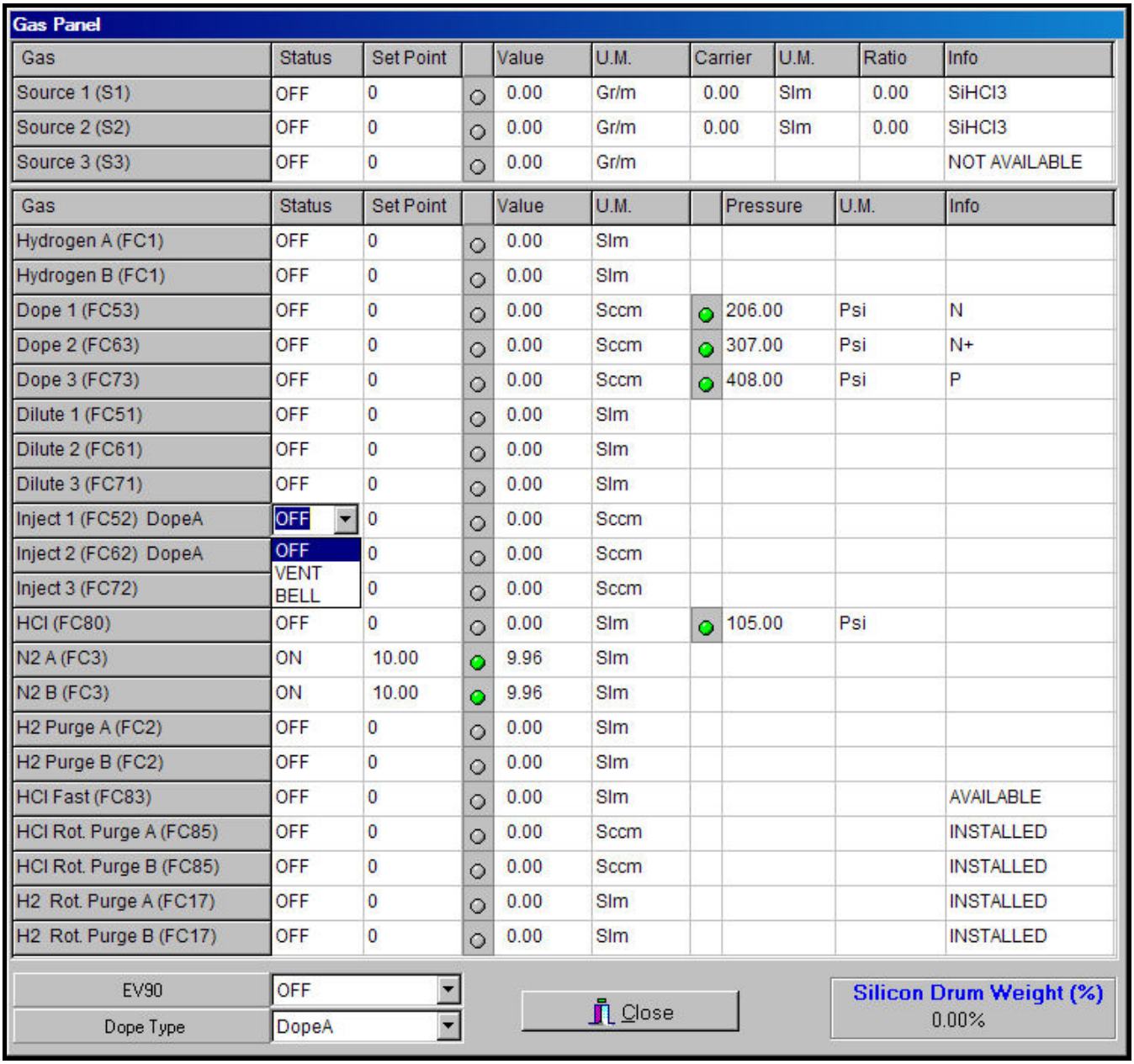

All the commands and relevant function are the same than in the standard gas panel test window described above.
The only difference is that is possible command the "Automatic DOPE1/DOPE2 switch" by using the dope type button.

Note:

- It is possible use the dope type button only if the INJECT 1 or the INJECT 2 are in the OFF status.
- The selected dope is shown in the dope type button and near the relevant inject command.

The electric valves activation command table will change only for the INJECT 1 and for the INJECT 2 as follow:

COMMAND	ON	VENT	BELL	NOTE
INJECT 1 DopeA		V65 /V54	V65 /V53	
INJECT 1 DopeB		V55 /V54	V55 / V53	
INJECT 3		V74	V73	
INJECT 2 DopeA		V65 / V64	V65 / V63	
INJECT 2 DopeB		V55 / V64	V55 / V63	

9.6 Spoiler

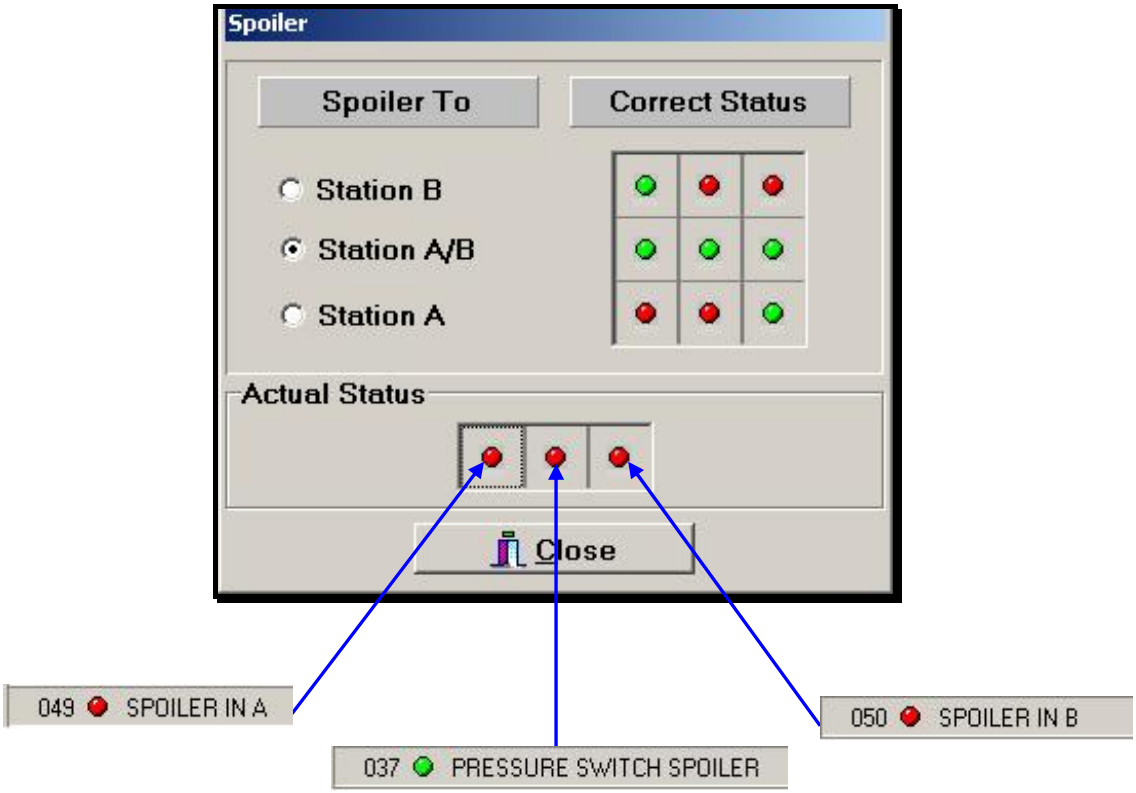

This window allows to command the spoiler movement.

By selecting with the mouse:

- Spoiler to station B the spoiler will move to the station B directing air to station A.
- Spoiler to station A/B the spoiler will move to the central position sending air in both stations.
- Spoiler to station A the spoiler will move to the station A directing air to station B.

As reference in the current status led table is shown the correct Proximity switch engagement.

- The left led, shown the status of side A spoiler proximity switch.
- The central led, shown the status of the spoiler air pressure switch.
- The right led, shown the status of side B spoiler proximity switch.

The user should compare the actual status field with the correct status field in order to verify the correct function of the spoiler group.

9.7 Generator

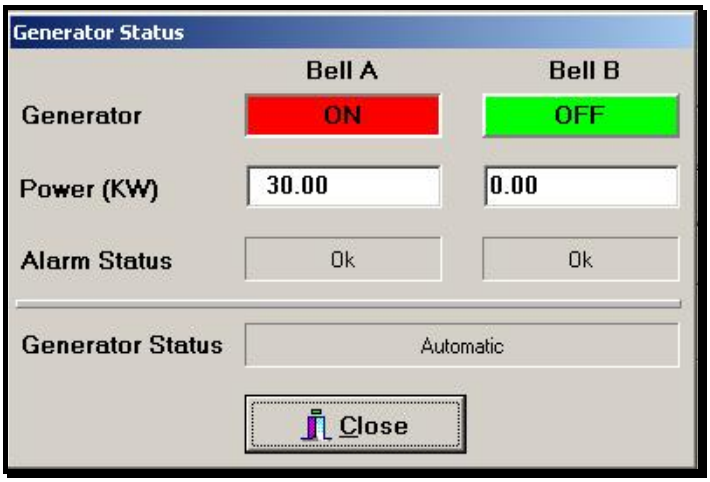

This command is only for skilled servicemen trained in the use of PE2061 and PE2061S Epitaxial Reactor.
It allows to send commands to the power generator in order to check the RS 232 serial link between reactor and generator.
This command is enabled when:

- There are no alarms pending.
- The bell-jars are closed.

It is not possible to operate the generator, both in manual and automatic mode, other than with this command.
The available options are:

- **POWER ON**

This command switches generator ON at **30KW** (is not possible modify the power value)
The command is not available if power is already on.
For safety reasons this commands lasts only for **1 minute,** after which the generator will be automatically switched OFF.

- **POWER OFF**

This command switches the generator off.

This window also displays:

- **ALARM STATUS**
  Displays the generator alarm status: ON or OFF
- **GENERATOR STATUS**
  Displays generator status: AUTOMATIC or MANUAL
- **POWER**
  Displays power of the station that is in run status
  ONLY FOR 2061S
  Power could be ON in both bell-jars contemporarily.

9.8 O-ring leak test

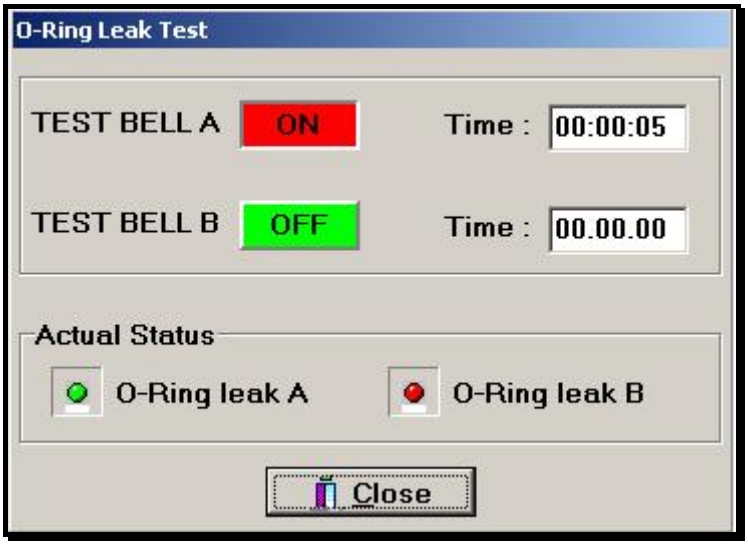

This command is only for skilled servicemen trained in the use of PE2061 and PE2061S Epitaxial Reactor.
It allows to run the bell-jar o-rings leak test .it is helpful to determinate the leaky point.

This command is enabled when:
- There are no alarms pending.
- The bell-jars are closed.

The available options are:

- **TEST BELL A ON/OFF**

This command allows to run and stop the o-ring leak test into station A.

- **TEST BELL B ON/OFF**

This command allows to run and stop the o-ring leak test into station B.

- **O-ring leak A**

The o-ring vacuum switch A status is shown in this field.

- **O-ring leak B**

The o-ring vacuum switch B status is shown in this field.

- **Time**

For each bell-jar there is a timer to shown the test duration.

The o-ring leak test can be run only to one station at time.

10 Management

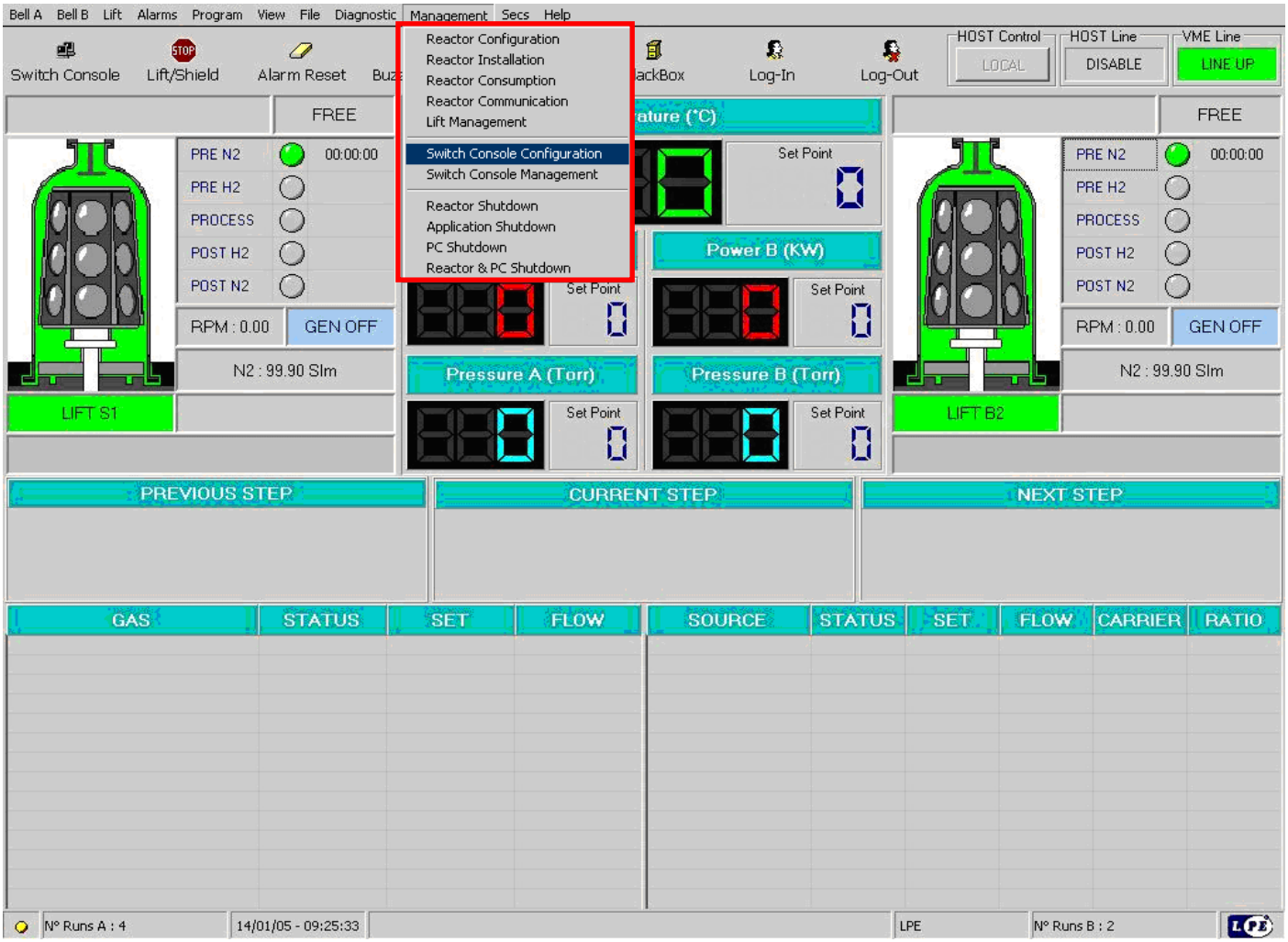

10.1 Access List to Management menu

Users have different access to the Management menu according to the below Access list:
LPE Level1 = Full Access.
Supervisor Level 2 = Partial Access. Reactor Installation menu is not available.
Maintenance Level 3 = Partial Access. Reactor Installation and Reactor Communication menu are not available.
Programme Level 4 = Partial Access. Only Reactor Consumption menu is accessible.
User Level 5 = No Access.

It ' s possible to enter in this menu only if both bell-jar are in FREE status.

10.2 Reactor Configuration

The Reactor Configuration window is a multi tab window. Each tab includes a set of parameters inherent the same reactor function.
All tabs are described in the following paragraphs

By means of this menu it is possible configure most of reactor parameters.
See followings paragraphs fore more details.

10.2.1 MFC Range

This window allows to set the MFC values range.

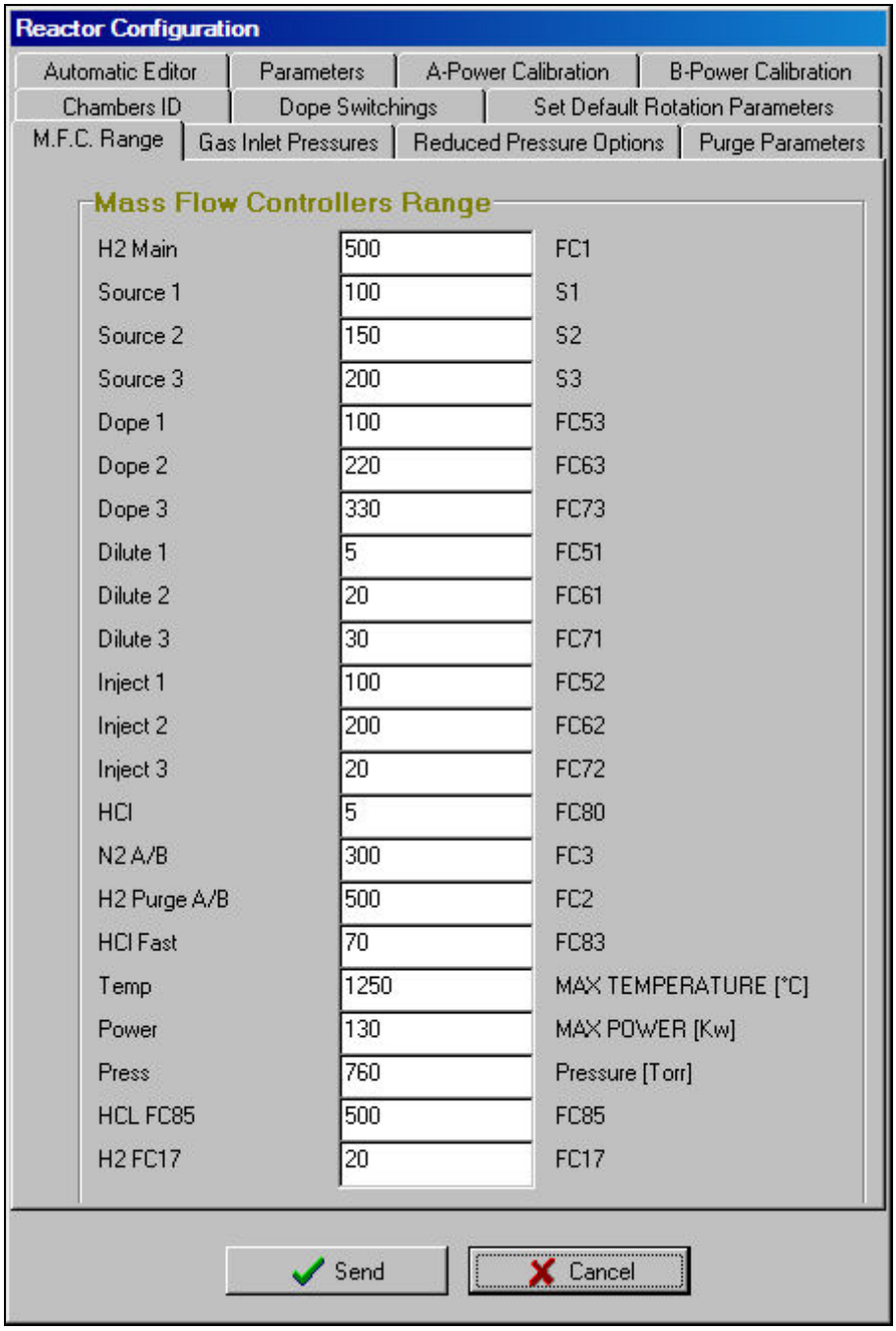

The LEFT column, shown the gas line names.
The CENTER column, shown the maximum set point that the correspondent mass flow controller can get.
For ex:
The H2 main mass flow controller has a range from 0 to 500 Slm .In the correspondent value column field, must be inserted 500.
The RIGHT column, shown for Mass Flow Controller name on the Gas Panel drawings.

On this window are also available a temperature, a power parameter and a pressure:

- Max power: is the maximum power that the generator can give to the reactor. If during the process the reactor request for more than one minute a value of power greater or equal to this value the process will be aborted jumping directly to the POST H2 status and **"Max Power"** alarm message will be displayed.
- Max temperature: is the maximum value of temperature that the reactor can get. If during the process the real temperature exceed this value, the process will be automatically aborted jumping directly to the POST H2 status and **"Bell A/B Over Temperature"** alarm message will be displayed.
- Pressure: is the maximum set point that a Pressure Line can have. This parameter is valid only when the Low Pressure System is Available.

Buttons:

- Send: by means of this command any change performed to the Reactor Configuration menu is saved in the workstation hard disk and the whole configuration is send to the reactor VME rack.
- Cancel: by means of this command it is possible exit to this menu without saving the parameters to the workstation and without sending it to the reactor VME rack.

Note:
This window must be configured only the first time that the reactor is switched ON during the start up. After the first configuration these values are stored permanently in the workstation hard disk. It is strongly suggested to back up the configuration file, following the instruction of the paragraph "Backup Configurations files".

10.2.2 Gas Inlet Pressures

This window allows to set the pressure ranges for the gas panel pressure transducers.

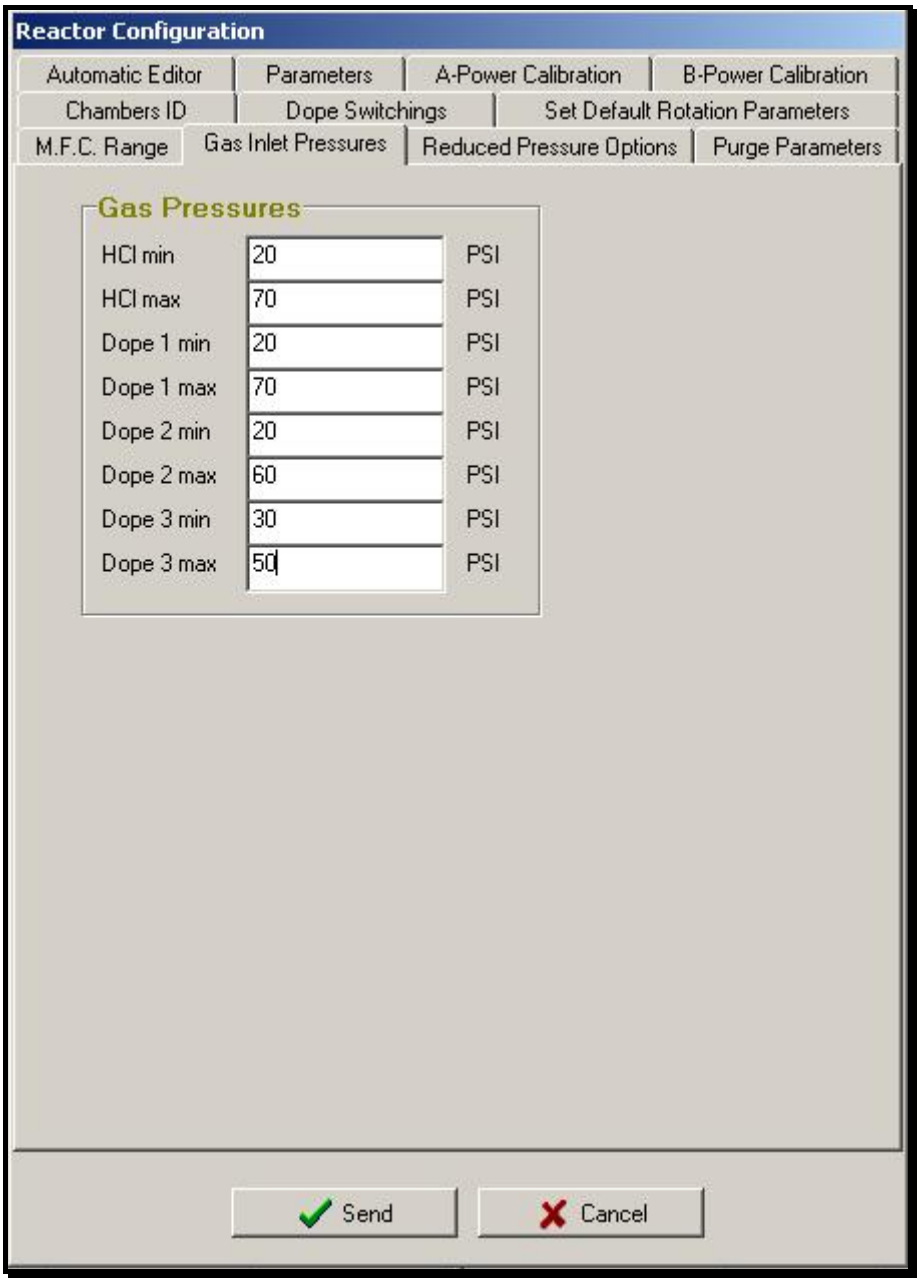

This window allows to set a range of pressure for the following gases:

- HCL
- DOPE1
- DOPE2
- DOPE3

These values of pressure are expressed in PSI.
If the real gas pressure is out of the range settled in this window, a warning message will be displayed. (i.e. **"HCl Pressure"**)

Buttons:

- Send: by means of this command any change performed to the Reactor Configuration menu is saved in the workstation hard disk and the whole configuration is send to the reactor VME rack.
- Cancel: by means of this command it is possible exit to this menu without saving the parameters to the workstation and without sending it to the reactor VME rack.

Note:

This window should be configured only the first time that the reactor is switched ON during the start up. After the first configuration these values are stored permanently on the workstation hard disk. It is strongly suggested to back up the configuration file, following the instruction of the paragraph "Backup Configurations files".

10.2.3 Reduced Pressure Options

This window allows to set some Reduced Pressure Parameters.

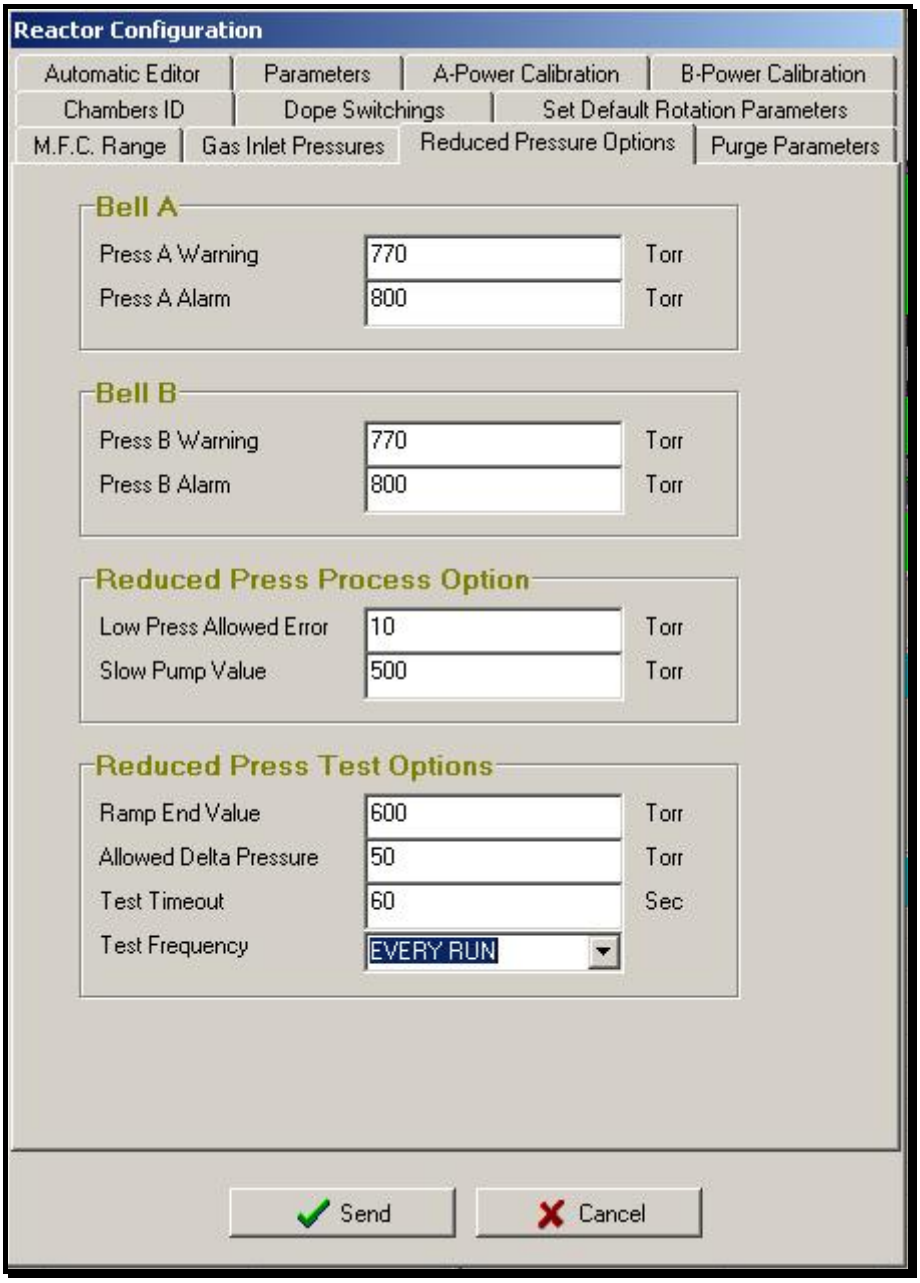

Bell A Pressure Warning:
In this field it is possible to enter the pressure warning threshold.
Valid inputs are: 760 - 800 Torr.
If the value of pressure inside the chamber A exceeds this value the **"press bell A warning"** message will be displayed.

Bell A Pressure Alarm:
In this field it is possible to enter the pressure alarm threshold.
Valid inputs are: -760 800 Torr.

If the value of pressure inside the chamber A exceed this value the **"press bell A alarm"** message will be displayed and will be closed all the gases to the chamber, until the value of pressure decrease below this limit.

Bell B Pressure Warning:
In this field it is possible to enter the pressure warning threshold.
Valid inputs are: 760 - 800 Torr.
If the value of pressure inside the chamber B exceeds this value the **"press bell B warning"** message will be displayed.

Bell B Pressure Alarm:
In this field it is possible to enter the pressure alarm threshold.
Valid inputs are: 760 - 800 Torr.
If the value of pressure inside the chamber B exceeds this value the **"press bell B alarm"** message will be displayed and will be closed all the gases to the chamber, until the value of pressure decrease below this limit.

Slow pump value:
In this field it is possible to enter the slow pump shut off value.
Valid inputs are: 0 - 760 Torr.

Pressure allowed error:
In this field it is possible to enter the maximum shifting between pressure set point and the real pressure value inside the chamber. If during the process the real pressure is above or below this value, for more than one minute, the process will be aborted and the **"Low Pressure Trouble"** alarm message will be displayed.
The above pressure parameter is controlled ONLY when the silicon is flowing inside the bell-jar (SX1or SX2 or SX 3= BELL).

Reduced Pressure Test Parameters

Ramp end value
It in this field it is possible to insert the pressure value on which the test will be performed.
Valid inputs are: 10 –760 Torr.

Allowed delta pressure
In this field it is possible to insert the maximum shifting between pressure set point and the real pressure value.
Valid inputs are: 1 – 760 Torr

Test Timeout
In this field it is possible to insert the duration of the test in seconds.
Valid inputs are: 30 – 3600 Sec

Test frequency
In this field it is possible to insert the frequency on which the test should be performed:

- **Diagnostic:** only using the apposite command on the diagnostic menu can perform the test.
- **Every run**: the test is performed automatically by the reactor each time a recipe containing a pressure line, has been executed.
- **Every 5 runs:** the reactor every five runs containing a pressure line performs the test automatically.

After selected this option, the test will be performed immediately the first executed recipe, containing a pressure line.

After that, the reactor will perform other 4 recipes, containing a line of pressure, without execute the test.
To the execution of the fifth recipe, containing a pressure line, the test will be performed again.

- **Once a day:** The test is performed automatically by the reactor one time every 24h, with the same logic of the "every 5 runs" options.
- **Once a week:** the reactor performs the test automatically one time every week, with the same logic of the "every 24 runs" options.

NOTE:

- Any frequency option is selected, the test in the diagnostic menu is always available.
- In the "Every run", "Every 5 runs", "Once a day", "Once a week" options the recipe count is performed for each chambers, and not for both together.

WARNING!
ONLY MOD. PE 2061S

The 2061S when are running two recipes, both containing a pressure line, and if is available the reduced pressure test with a frequency different than "diagnostic" it will skip automatically the test on the last chamber which was gone in process. On the GUI screen will appear the message "Reduced pressure test skipped".

Buttons:

- Send: by means of this command any change performed to the Reactor Configuration menu is saved in the workstation hard disk and the whole configuration is send to the reactor VME rack.
- Cancel: by means of this command it is possible exit to this menu without saving the parameters to the workstation and without sending it to the reactor VME rack.

Note:
The parameter stored in this windows are active **ONLY** if is available the "Low pressure system". For more info see the "Reduced Pressure System" manual.
This window must be configured only the first time that the reactor is switched ON during the start up. After the first configuration these values are stored permanently on the workstation hard disk. It is strongly suggested to back up the configuration file, following the instruction of the paragraph "Backup Configurations files".

10.2.4 Purge Parameters

This window allows to set the chambers purge parameters.

This window allows to set the duration time and flow set point, for the following purge cycles:

- PRE N2
- PRE H2
- POST H2
- POST N2

These values are referred **to each chamber**. This means that the total consumption for each purging step should be consider as double.

For safety reasons it is not allowed to set values lower than:

	Flow	Time
PRE N2:	50 Slm	180 seconds
PRE H2:	50 Slm	180 seconds
POST H2:	50 Slm	480 seconds
POST N2:	50 Slm	720 seconds

In order to reduce theN2 consumption if the reactor stay idle for more than one hour in PREN2 or in POST N2, (with out receiving any command from the operator), it will cut by half the N2 flow set point.
As soon the reactor receive any command from the operator it will automatically restore the flow settled on the above window.

WARNING!

FOR MOD. PE2061S ONLY

In PE2061S Epitaxial Reactor configuration menu has been extended with:

- PRE H2 Power Stab Value: this value expressed in kW set the end of the power ramp performed during the PreH2 time. Note that the beginning of the power ramp is fixed by default to 20KW and is not modifiable.
  For example: if this value is settled to 70kW the generator will automatically start the ramp from 20KW and finish it to 70kW.
- PRE H2 Power Ramp Time: this value expressed in second set the time on which the power ramp
  will be performed. Obviously the total length of the Pre H2 purging status is the addition of the Pre H2 time plus the Pre H2 power ramp time.

For every purge cycle, it is possible to set time and power. For safety reasons, it is not allowed to:
- Set time values lower than 360 sec.
- Set power values more than 100 KW.

IMPORTANT !!!

If the parameter "PRE H2 Power Stab Value" is set at 20 KW there will be no power ramp during PRE H2 and the reactor will work as a normal PE2061.

In order to better understand what explain in this paragraph consider this example:

	Flow/Power	Time
PRE N2:	50 Slm	180 seconds
PRE H2:	50 Slm	180 seconds
PROCESS:		3600 seconds
POST H2:	50 Slm	480 seconds
POST N2:	50 Slm	720 seconds
PRE H2 POWER RAMP TIME:		360 seconds
PRE H2 POWER STAB VALUE:	70KW	

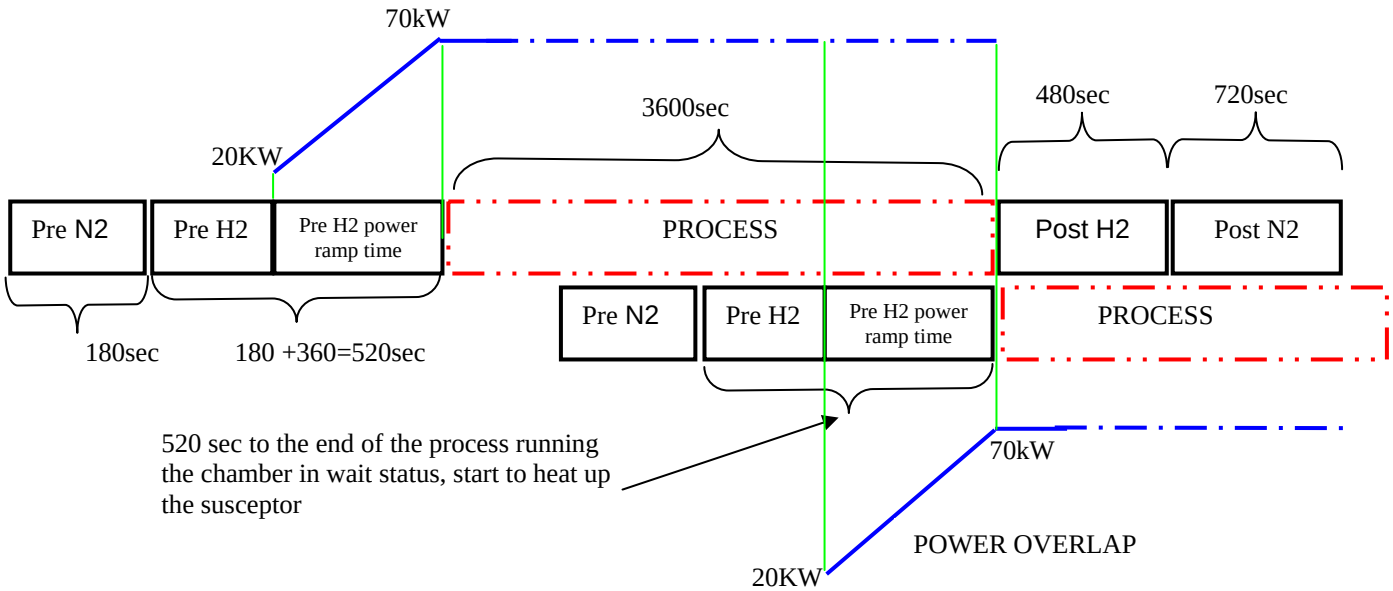

Buttons:

- Send: by means of this command any change performed to the Reactor Configuration menu is saved in the workstation hard disk and the whole configuration is send to the reactor VME rack.
- Cancel: by means of this command it is possible exit to this menu without saving the parameters to the workstation and without sending it to the reactor VME rack.

Note:

This window must be configured only the first time that the reactor is switched ON during the start up. After the first configuration these values are stored permanently on the workstation hard disk. It is strongly suggested to back up the configuration file, following the instruction of the paragraph "Backup Configurations files".

10.2.5 Parameters

This window allows to set some Reactor generic parameters and Lift parameters:

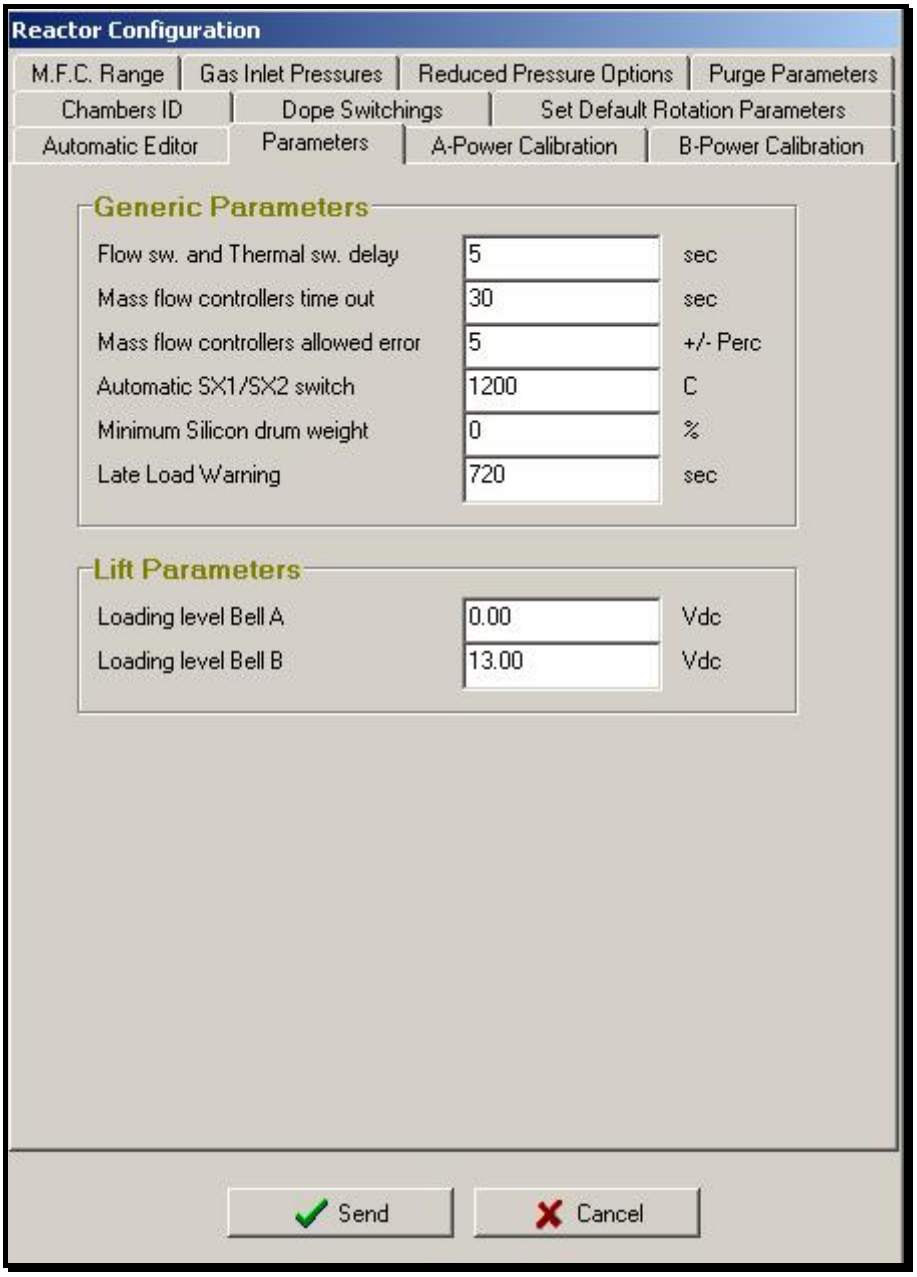

Generic Parameters:

- **FLOW & THERMAL SWITCH DELAY**
  This parameter allows to set a time in seconds to delay the intervention of the water flow and thermal switches alarms. Here follow a list of the alarms delayed from this timeout:
  - Thermal switch plate A
  - Flow switch plate A
  - Thermal switch coil A
  - Flow switch coil A
  - Thermal switch plate B
  - Flow switch plate B
  - Thermal switch coil B
  - Flow switch coil B
  - Thermal switch capacitor
  - Flow switch capacitor

  Normally the delay is set at 4 - 5 seconds. If the fault lasts for N seconds (N is the delay set value) then the flow and thermal switch related alarm will be activated and the process aborted.

- **MASS FLOW CONTROLLERS TIME OUT**
  This parameter is a time in seconds to delay the intervention of the mass flow controller warning and alarms, in order to allow to the MFC to reach the set point requested.

  Normally the delay is set at 20 –30 seconds. If the fault lasts for N seconds (N is the delay set value) then the mass flow controller related warning and alarm would be activated and the process aborted.

- **MASS FLOW CONTROLLERS ALLOWED ERROR**
  This parameter sets the accepted mass flow controllers difference (in ±%) between set point and real flow.

  An alarm procedure is released if flow error exceeds the accepted difference for a time exceeding the mass flow controller time out.

  Consider this simple example to better understand how works the above parameter
  Set point = 100 slm
  Mass flow controller allowed error = ± 5%

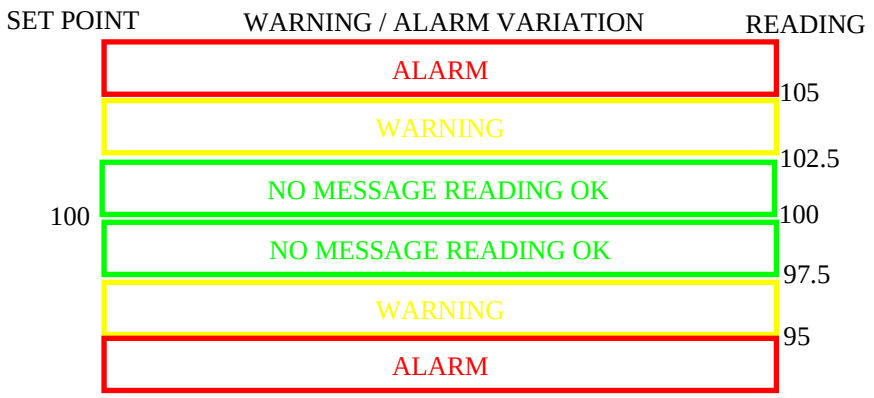

- **AUTOMATIC SOURX1/SOURX2 SWITCH**

This parameter sets the temperature on which the "gas panel SOURX1/SOURX2 switch" valves will be activated during process. (See "Automatic SOURX1/SOURX2 switch" paragraph for more reference).

- **MINIMUM SILICON DRUM WEIGHT**
  This parameter sets the accepted minimum weight value by silicon drum.
  The silicon drum monitor the weight of the main silicon thank which supply the reactor bubbler by sending the feedback signal to the reactor.
  The value is expressed in percentage: 100% means that the thank is full, vice versa 0% that is empty.

- **LATE LOAD WARNING**
  This parameters sets the time on which the message "Ready To Load Wafer" is displayed.
  It advise the operator that is time to load wafer in the FREE chamber, in order to don't loose the overlap time between the two chambers.

Lift Parameters:

- **LOADING LEVEL BELL A**
  This parameter set the susceptor loading level for station A.
- **LOADING LEVEL BELL B**
  This parameter set the susceptor loading level for station A.

Buttons:

- Send: by means of this command any change performed to the Reactor Configuration menu is saved in the workstation hard disk and the whole configuration is send to the reactor VME rack.
- Cancel: by means of this command it is possible exit to this menu without saving the parameters to the workstation and without sending it to the reactor VME rack.

Note:

This window must be configured only the first time that the reactor is switched ON during the start up. After the first configuration these values are stored permanently on the workstation hard disk. It is strongly suggested to back up the configuration file, following the instruction of the paragraph "Backup Configurations files".

10.2.6 Late Load Warning Logic

The Late Load parameters sets the time on which the message "Ready To Load Wafer" and the reactor buzzer (with an intermittent sound) are activated.
It advise the operator that is time to load wafer in the FREE chamber, in order to don't loose the overlap time between the two chambers.

To better understand consider this example for PE2061S reactor:

	Flow/Power	Time
PRE N2:	50 Slm	180 seconds
PRE H2:	50 Slm	180 seconds
PROCESS:		3600 seconds
POST H2:	50 Slm	480 seconds
POST N2:	50 Slm	720 seconds
PRE H2 POWER RAMP TIME:		360 seconds
PRE H2 POWER STAB VALUE:	70kW	
LATE LOAD WARNING		900 seconds

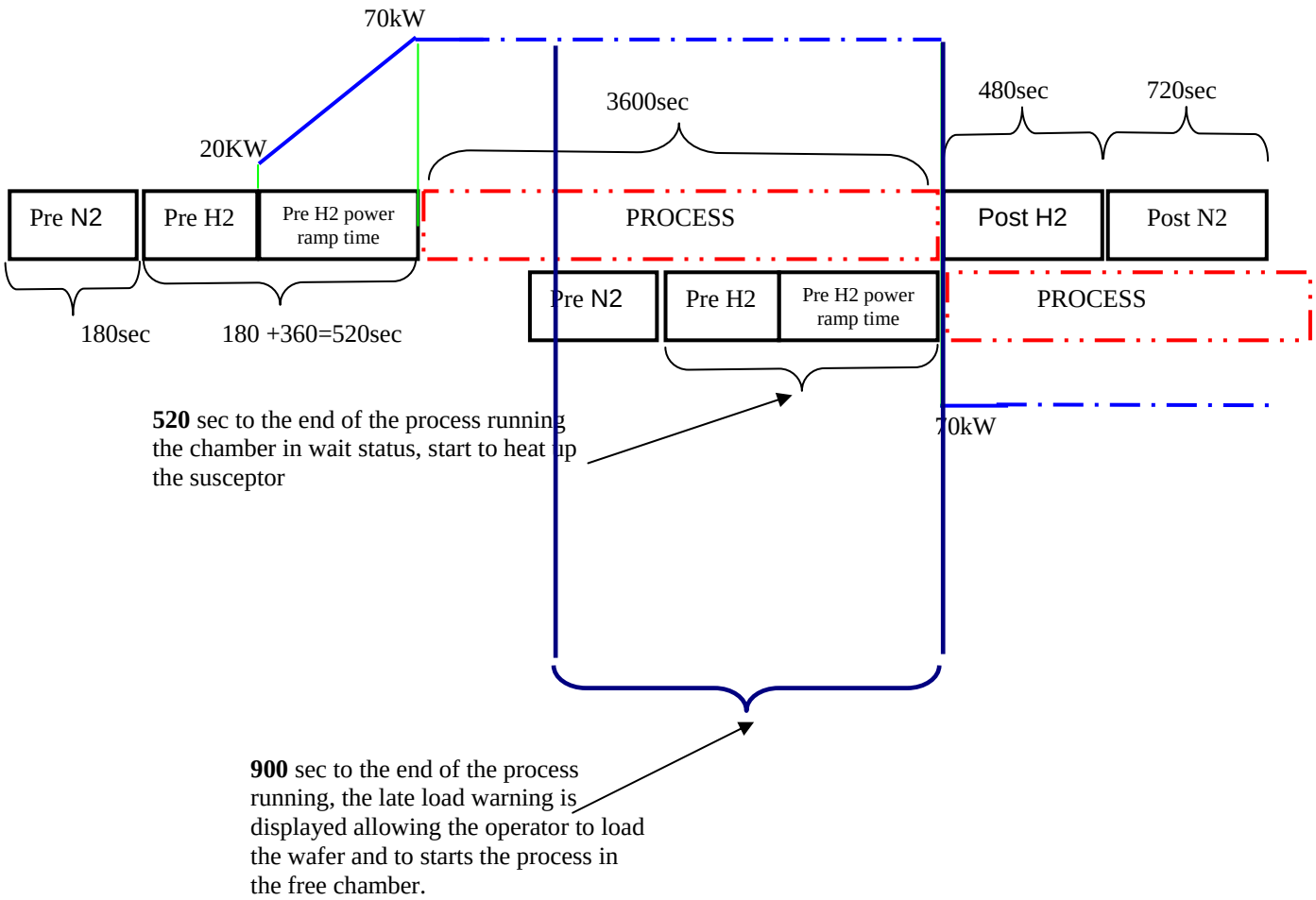

To better understand consider this example for PE2061 reactor:

	Flow/Power	Time
PRE N2:	50 Slm	180 seconds
PRE H2:	50 Slm	180 seconds
PROCESS:		3600 seconds
POST H2:	50 Slm	480 seconds
POST N2:	50 Slm	720 seconds
LATE LOAD WARNING		900 seconds

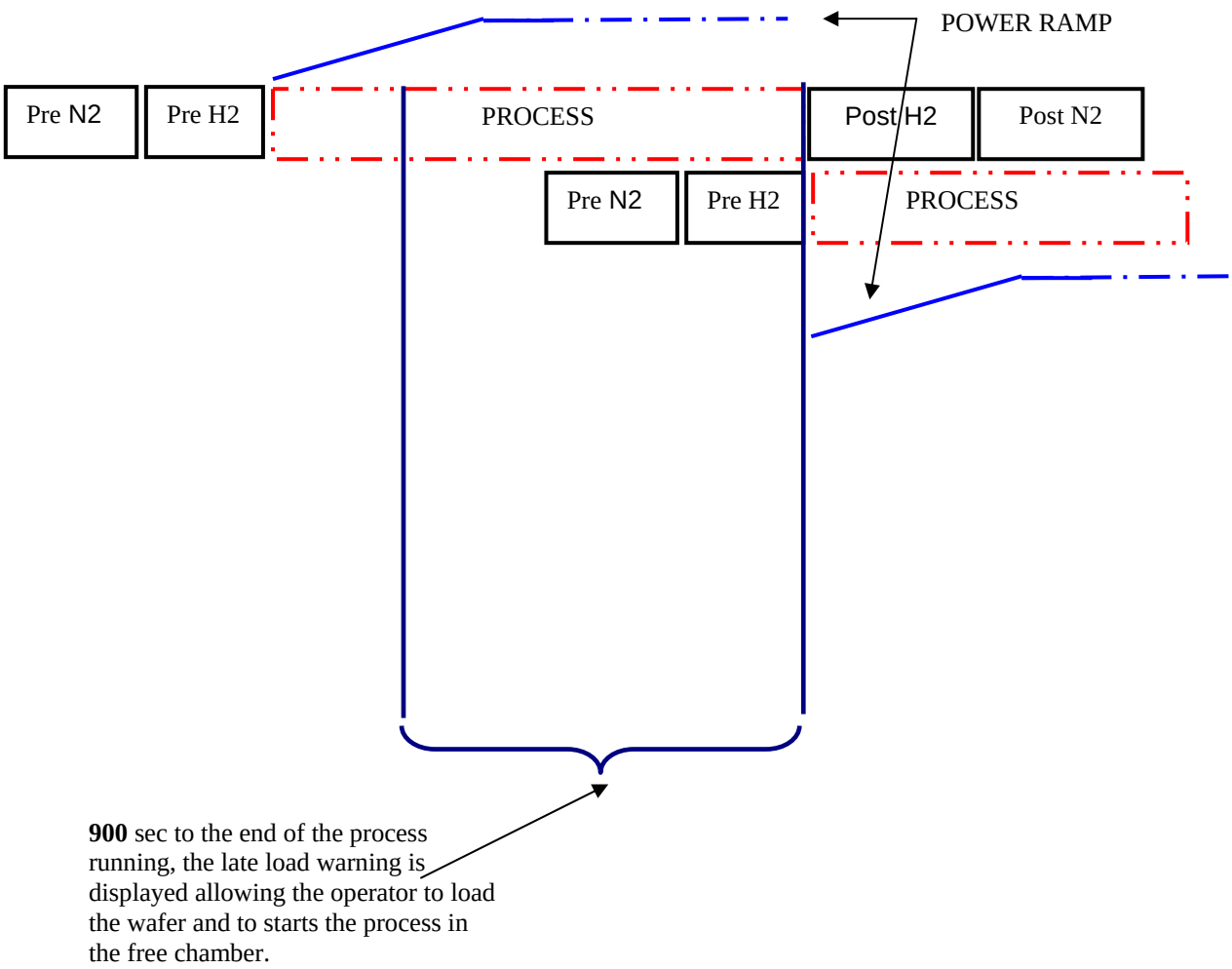

The message will be displayed only if there is one chamber in process status and the other in free status.
The Message Box disable all others commands. Before to proceed with any other operation is necessary press the OK button.

As all others messages it is recorded in the Black Box.
To disable the Late Load Warning must be set the parameter to zero second.

10.2.7 Automatic Editor

This window allows to set The Automatic editor parameters

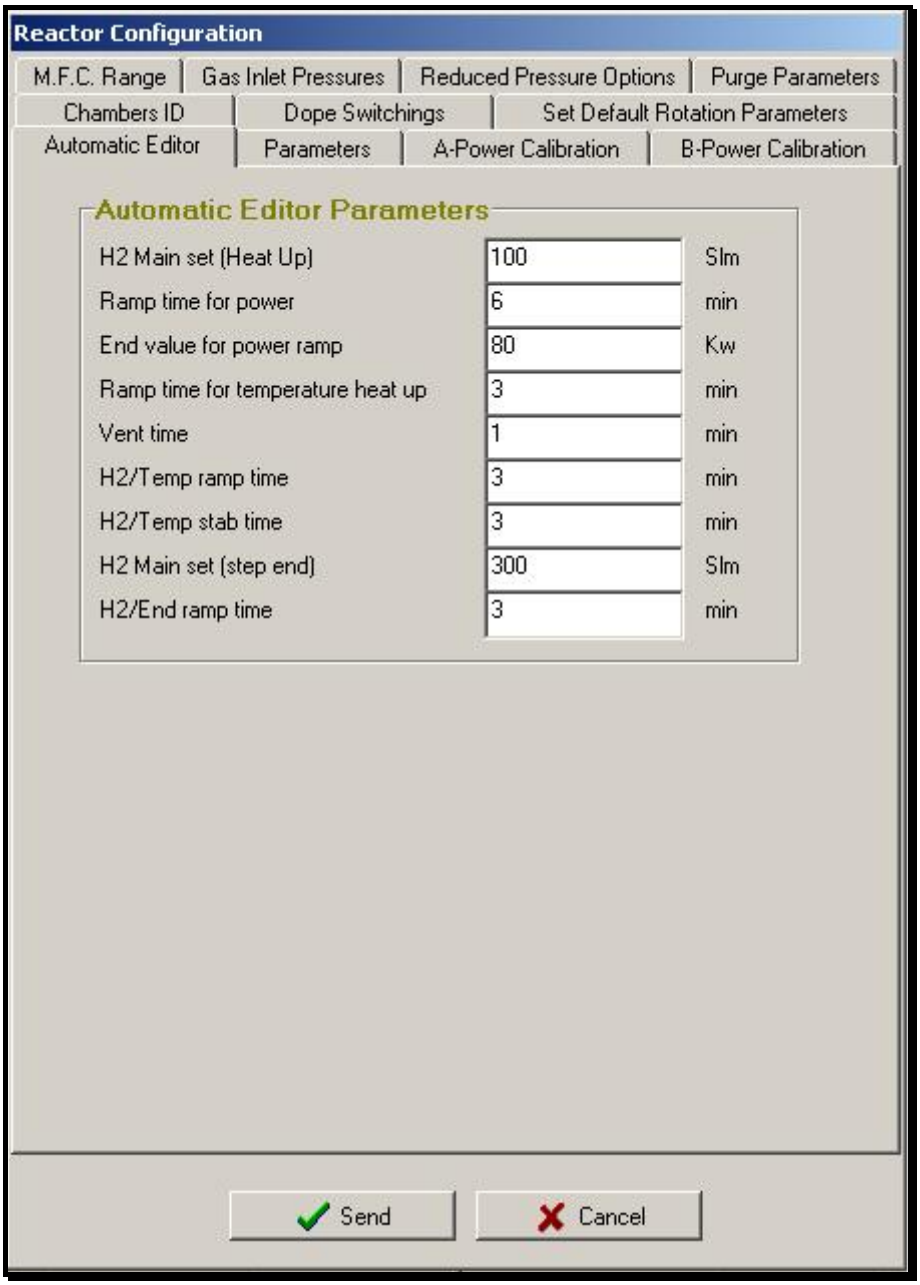

- **PARAMETERS FOR AUTOMATIC EDITOR (AUTO EDIT)**

The following parameters are use from the GUI, as a base to make the recipe with the auto edit option. For more information see the chapter **" Auto edit".**

- **H2 MAIN SET (HEAT UP)**
  The value chosen here will be used in the AUTO EDIT option as a default value .It sets the H2 value during the susceptor heat up.

- **RAMP TIME FOR POWER**
  The value chosen here will be used in the AUTO EDIT option as a default value.
  It sets the ramp time for power ramp, between start and end value.

- **END VALUE FOR POWER RAMP**
  The value chosen here will be used in the AUTO EDIT option as a default value.
  It sets the final power value after ramp.

- **RAMP TIME FOR TEMPERATURE HEAT UP**
  The value chosen here will be used in the AUTO EDIT option as a default value.
  It sets the ramp time for temperature ramp, between start and end value

- **VENT TIME**
  The value chosen here will be used in the AUTO EDIT option as a default value.
  It sets the time in vent for all gases.

- **H2 / TEMP RAMP TIME**
  The value chosen here will be used in the AUTO EDIT option as a default value.
  It sets the ramp time for H2 main and temperature between two steps.

- **H2 / TEMP STAB TIME**
  The value chosen here will be used in the AUTO EDIT option as a default value.
  It sets stab time for H2 main and temperature after ramp (time to maintains end value).

- **H2 MAIN SET (STEP END)**
  The value chosen here will be used in the AUTO EDIT option as a default value.
  It sets the H2 set point for purge during recipe last step.

- **H2/END RAMP TIME**
  The value chosen here will be used in the AUTO EDIT option as a default value.
  It set the ramp time of the latest step H2 Main line in case the H2 Main Start Value differs from the Stab Value.

Buttons:

- Send: by means of this command any change performed to the Reactor Configuration menu is saved in the workstation hard disk and the whole configuration is send to the reactor VME rack.
- Cancel: by means of this command it is possible exit to this menu without saving the parameters to the workstation and without sending it to the reactor VME rack.

Note:

This window must be configured only the first time that the reactor is switched ON during the start up. After the first configuration these values are stored permanently on the workstation hard disk. It is strongly suggested to back up the configuration file, following the instruction of the paragraph "Backup Configurations files".

10.2.8 A- Power Calibration

This window allows to enter the A side temperature calibration parameters.

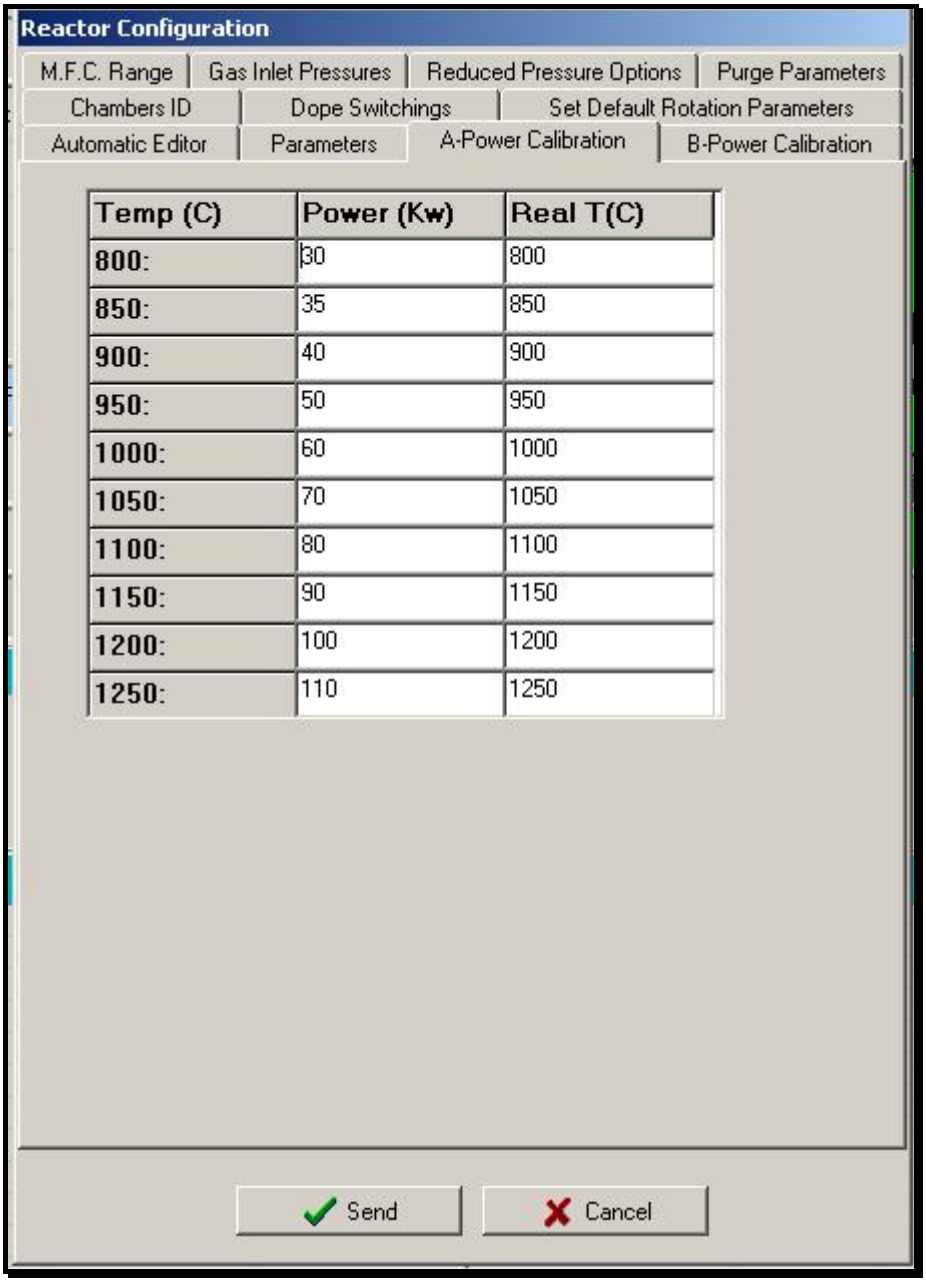

Temp (C)	Power (Kw)	Real T(C)
800:	30	800
850:	35	850
900:	40	900
950:	50	950
1000:	60	1000
1050:	70	1050
1100:	80	1100
1150:	90	1150
1200:	100	1200
1250:	110	1250

These windows allows to enter the real value of temperature measured with one external parameter and power necessary to reach every temperature step, for chamber A and for chamber B.
Before to fill up the parameter contained in this window read carefully the **"temperature calibration "** paragraph.

Buttons:

- Send: by means of this command any change performed to the Reactor Configuration menu is saved in the workstation hard disk and the whole configuration is send to the reactor VME rack.
- Cancel: by means of this command it is possible exit to this menu without saving the parameters to the workstation and without sending it to the reactor VME rack.

Note:

This window must be configured only the first time that the reactor is switched ON during the start up. After the first configuration these values are stored permanently on the workstation hard disk. It is strongly suggested to back up the configuration file, following the instruction of the paragraph "Backup Configurations files"

10.2.9 B- Power Calibration

This window allows to enter the B side temperature calibration parameters.

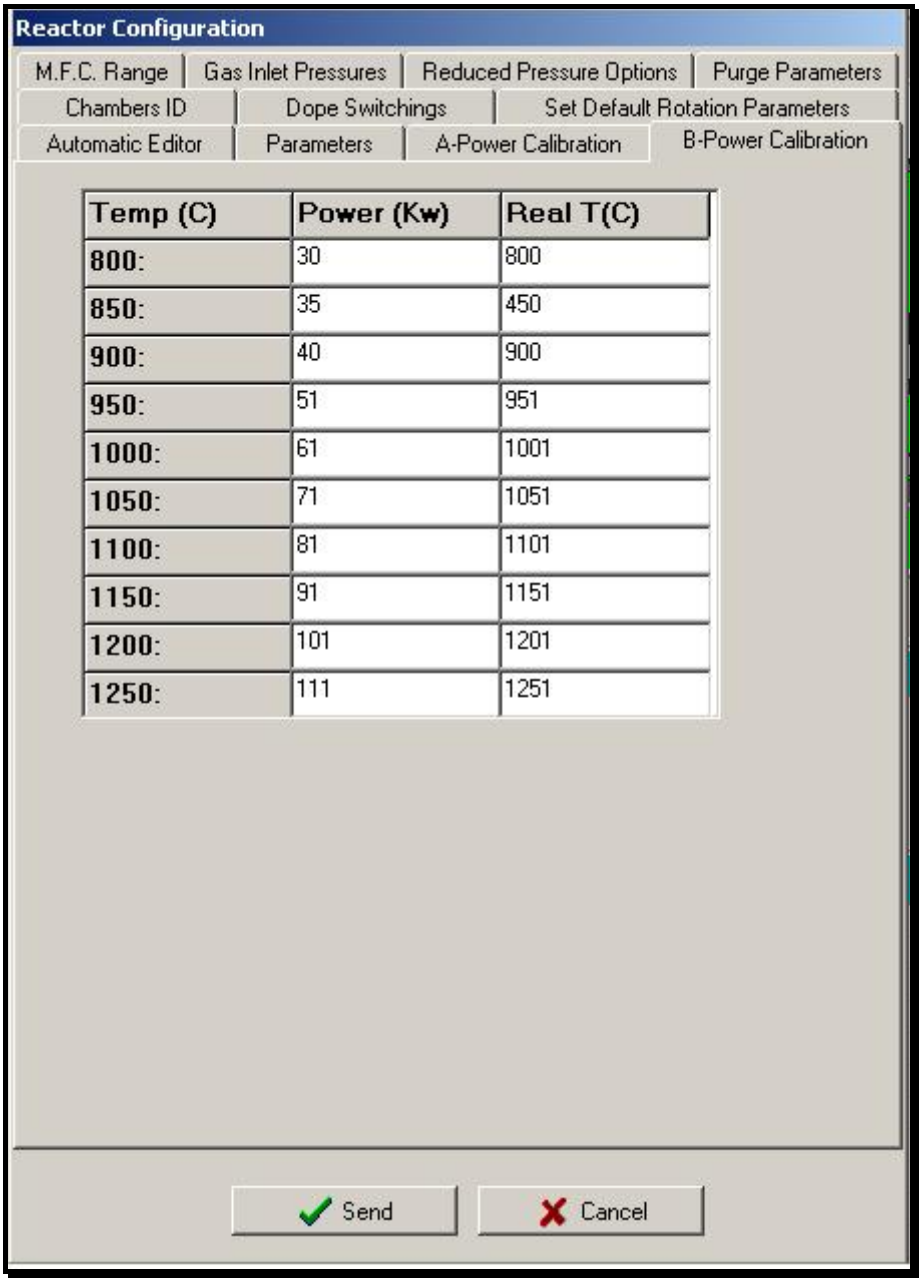

Temp (C)	Power (Kw)	Real T(C)
800:	30	800
850:	35	450
900:	40	900
950:	51	951
1000:	61	1001
1050:	71	1051
1100:	81	1101
1150:	91	1151
1200:	101	1201
1250:	111	1251

These windows allows to enter the real value of temperature measured with one external parameter and power necessary to reach every temperature step, for chamber A and for chamber B.
Before to fill up the parameter contained in this window read carefully the **"temperature calibration "** paragraph.

Buttons:

- Send: by means of this command any change performed to the Reactor Configuration menu is saved in the workstation hard disk and the whole configuration is send to the reactor VME rack.
- Cancel: by means of this command it is possible exit to this menu without saving the parameters to the workstation and without sending it to the reactor VME rack.

Note:

This window must be configured only the first time that the reactor is switched ON during the start up. After the first configuration these values are stored permanently on the workstation hard disk. It is strongly suggested to back up the configuration file, following the instruction of the paragraph "Backup Configurations files"

10.2.10 Chambers ID

This window allows to set the chambers Identification number, which appears below the bell-jar picture on the main GUI page.

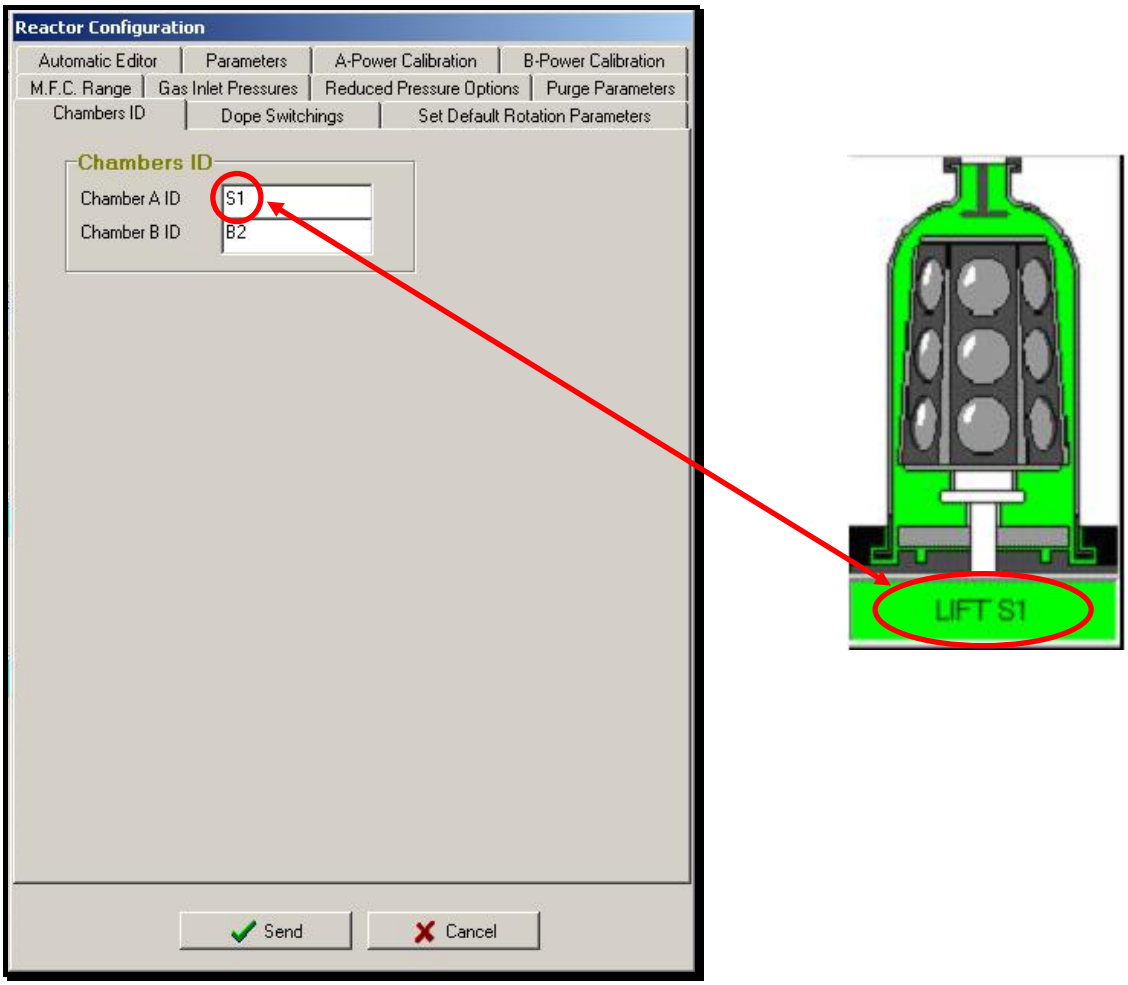

Buttons:

- Send: by means of this command any change performed to the Reactor Configuration menu is saved in the workstation hard disk and the whole configuration is send to the reactor VME rack.
- Cancel: by means of this command it is possible exit to this menu without saving the parameters to the workstation and without sending it to the reactor VME rack.

Note:

This window must be configured only the first time that the reactor is switched ON during the start up. After the first configuration these values are stored permanently on the workstation hard disk. It is strongly suggested to back up the configuration file, following the instruction of the paragraph "Backup Configurations files"

10.2.11 Dope switching

This window allows to set the name of the two kinds of dopants related to dope1 and dope3 or dope1 and dope2 (it depends on the configuration).

These names will be shown on all windows related to dopants management only if the Smart dopant option is set as DOPE1-2 or DOPE1-3.

Note:
The dope name cannot contain space.

Buttons:

- Send: by means of this command any change performed to the Reactor Configuration menu is saved in the workstation hard disk and the whole configuration is send to the reactor VME rack.
- Cancel: by means of this command it is possible exit to this menu without saving the parameters to the workstation and without sending it to the reactor VME rack.

Note:

This window must be configured only the first time that the reactor is switched ON during the start up. After the first configuration these values are stored permanently on the workstation hard disk. It is strongly suggested to back up the configuration file, following the instruction of the paragraph "Backup Configurations files"

10.2.12 Set Default Rotation Parameters

This windows allows to set the Default Rotation Parameters of station A & B

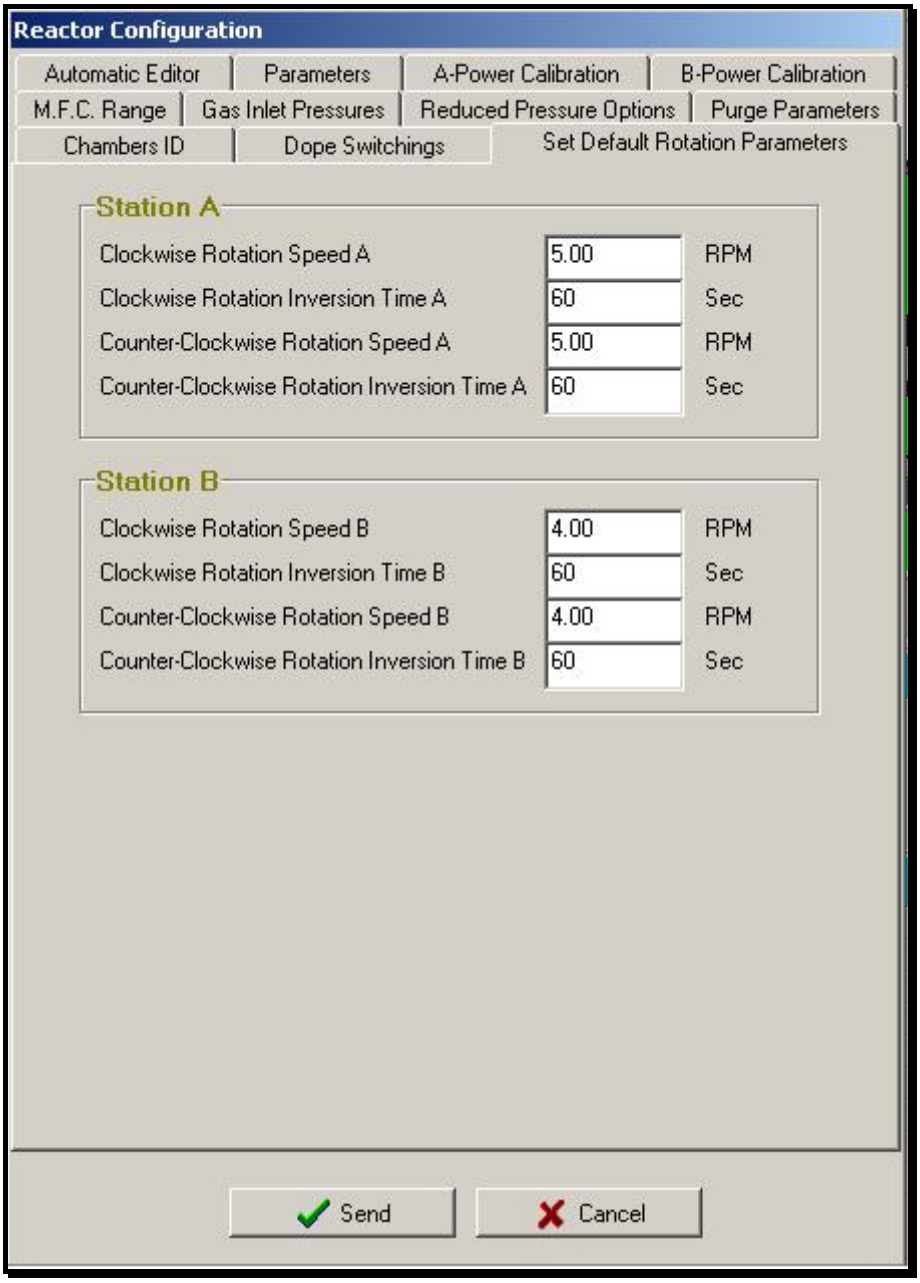

Each bell-jar can have its own rotation values as follows:

Station A

- ClockWise Rotation Speed A (Round Per Minute).
- ClockWise Rotation Inversion Time A (second).
- Counter-ClockWise Rotation Speed A (RPM).
- Counter-ClockWise Rotation Inversion Time A (sec).

Station B

- ClockWise Rotation Speed B (Round Per Minute).
- ClockWise Rotation Inversion Time B (second).
- Counter-ClockWise Rotation Speed B (RPM).
- Counter-ClockWise Rotation Inversion Time B (sec)..

IMPORTANT !!!
Please note that the above rotation settings are in operation **ONLY** when the silicon or the HCl are flowing inside the bell-jar (SX1or SX2 or SX 3= BELL and HCL=BELL).
Beside this condition the susceptor ALWAYS rotates in one direction at 4 rpm without reversing.

Moreover, rotation stops after POST H2 purge and starts again at the beginning of the next run.
Summarizing:

STATUS	ROTATION PE2061	ROTATION PE2061S
PRE N2	OFF	OFF
PRE H2	OFF	ON
PROCESS (Si =/= BELL)	4 RPM (NO REVERSING)	4 RPM (NO REVERSING)
PROCESS (Si == BELL)	SET VALUES	SET VALUES
POST H2	4 RPM (NO REVERSING)	4 RPM (NO REVERSING)
POST N2	OFF	OFF

Buttons:

- Send: by means of this command any change performed to the Reactor Configuration menu is saved in the workstation hard disk and the whole configuration is send to the reactor VME rack.
- Cancel: by means of this command it is possible exit to this menu without saving the parameters to the workstation and without sending it to the reactor VME rack.

Note:

This window must be configured only the first time that the reactor is switched ON during the start up. After the first configuration these values are stored permanently on the workstation hard disk. It is strongly suggested to back up the configuration file, following the instruction of the paragraph "Backup Configurations files"

10.3 Reactor Installation

The Reactor Installation window is a multi tabs window.
Each tab includes a set of options inherent the same reactor Function.
All tabs are described in the following paragraphs.

10.3.1 Reactor Options

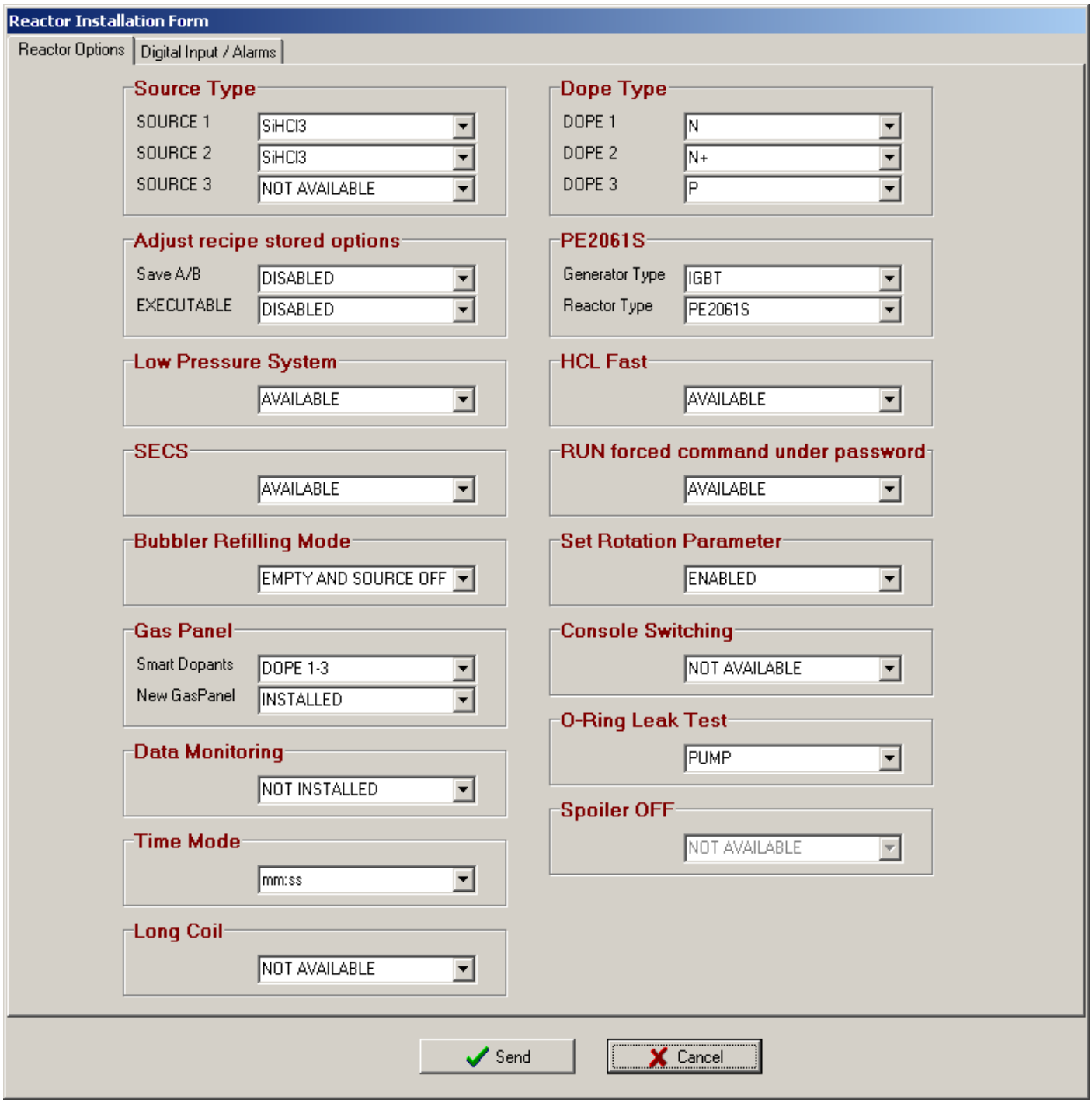

This menu allows modifying different options:

- ***Source Type***: selects silicon source for source 1 source 2 and source 3 (SiCl4 or SiHCl3 or MFC). According to choice (SICL4 or SICHL3), the computer will display carrier litres and correct ratio on the gas panel control window. This option is available if the reactor gas panel is equipped with source vaporizer.
  According to choice (MFC), the computer will not display in the gas panel control window the value of the H2 carrier and mix ratio. This option is available if the reactor source line is equipped by mass flow controller.

Note:
The HCL Fast MFC use the same analogs input than the SOURCE 3 MFC. For this reason the HCl Fast option exclude automatically the SOURCE 3 option and vice versa.

- ***Adjust recipe stored options***
  Save as A/B
  "Enable " means that in the "Adjust recipe stored" menu are also available the "save as ..A" and "save as ..B" commands, in order to allows the operator to save the recipe to station A or to station B.
  "Disable" means that in the "Adjust recipe stored" menu aren't available the "save as…A" and "save as …B" commands. This configuration guarantee the maximum protection of the recipe stored in the workstation hard disk, because the operator can only make the changes that the process engineer let him available.
  Executable
  "Enable" means that in the "Adjust recipe stored" menu is available the "executable" command, in order to allow the operator to make available or not the recipe for the "run" menu.
  "Disable" means that in the "Adjust recipe stored" menu isn't available the "executable" command. This configuration guarantee the maximum protection of the recipe stored in the workstation hard disk, because the operator can only make the changes that the process engineer let him available.

- ***Low Pressure System***: selects availability of low pressure system and enable all the logics related to the low pressure system control. (available or not available)

- ***SECS***: selects availability of SECS menu and GEM SECS communication. (available or not available)

- ***Bubbler Refilling Mode***:
  Empty and source off
  Bubbler is automatically refilled when silicon is not at proper level AND relevant silicon line is off. Therefore during process the bubbler will be refilled when the deposition step is completed.
  Empty and source on
  Bubbler is automatically refilled when silicon is not at proper level AND relevant silicon line is operating. During deposition step, bubbler is refilled every time silicon falls below normal level.

- ***Gas Panel***
  Smart Dopants
  "DOPE1-2" means that the gas panel is provided with the "Automatic DOPE1/DOPE2 switch" options. (See "Automatic DOPE1/DOPE2 switch" chapter for more reference).
  "DOPE1-3" means that the gas panel is provided with the "Automatic DOPE1/DOPE3 switch" options. (See "Automatic DOPE1/DOPE3 switch" chapter for more reference).
  "Not available" means that the gas panel is not provided with the "Automatic DOPE1/DOPE3 switch" options.
  New Gas Panel
  "Installed" that the gas panel is provided with the "New Gas Panel" options. (See "New MFC Rot Purge, HCl Rot Purge" chapter for more reference).
  "Not available" means that the gas panel is not provided with the "new gas panel" options.

- ***Data Monitoring***: selects availability of the Data monitoring system. (available or not available)

- ***Time Mode***: allows to express time in "minutes and seconds" or "minutes and, tenths-of-minute" to make easier the time adjustments. (mm:ss or mm:tt).
  Example: 5 minutes and 48 seconds correspond to 6 tenth of minutes, thus 5:48 is the same as 5,6. Time is **always** displayed in minutes and seconds even with the tenths of minute option.

- ***Long Coil***: sets the availability of the long coil and enables all the logics related to the long coil option. If available, the Long Coil option allows the MAX POWER to be set to higher values. (available or not available)

- ***Dope Type***: selects dope kind for dope lines 1, 2, and 3 (N, N+ type or P, P+ type)

- ***PE2061S***:
  Reactor type
  Selects availability of PE2061**S** logic related to the control of two stations in overlap or the standard logic for a 2061. (2061 or 2061S)**.**
  Generator type
  Selects the communication protocols between reactor and the generator type connected to the reactor. (IGBT or SCR).
  Note:
  2061 logic is related only to SCR generator and 2061S logic is related only to IGBT generator.

- ***HCl Fast***: selects availability of HCl fast mass flow controller.
  "Available" means that the reactor gas panel is provided with the MFC for HCl line.
  "Not available" means that the reactor gas panel is provided with the BY PASS option for HCl line.
  Note:
  The HCL Fast MFC use the same analogs input than the SOURCE 3 MFC. For this reason the HCl Fast option exclude automatically the SOURCE 3 option and vice versa.

- ***RUN forced command under password***:
  "Enable" means that a user with only the access level **User Level 5,** cannot use HOLD and RUN FORCED command.
  "Disable" means that HOLD status and RUN FORCED are always available.

- ***Set rotation parameter***
  "Enable" means that the "set rotation parameter" window is available and the rotation window linked to each recipe start as default with "get default parameter".
  "Disable" means that the "set rotation parameter" window is not available and the rotation window linked to each recipe start as default with "automatic setting".

- ***Console switching***: selects availability of the remote control for the gray area. (available or not available)

- ***O-Ring Leak Test***:
  The o-ring leak test is executed by the use of a pump (standard option) or by the use of a venturi, flown with nitrogen (this kit is optional). (pump or venturi)

- ***Spoiler OFF*** : selects availability of the command Spoiler OFF in the recipe editor.

Buttons:

- Send: by means of this command any change performed to the Reactor Configuration menu is saved in the workstation hard disk and the whole configuration is send to the reactor VME rack.
- Cancel: by means of this command it is possible exit to this menu without saving the parameters to the workstation and without sending it to the reactor VME rack.

Note:

This window must be configured only the first time that the reactor is switched ON during the start up. After the first configuration these values are stored permanently on the workstation hard disk. It is strongly suggested to back up the configuration file, following the instruction of the paragraph "Backup Configurations files"

10.3.2 Digital Input /Alarms

This page allows to configure some digital inputs status.

The led at the left of each description gives the following information:

- **GREEN = DIGITAL INPUT CLOSED**
- **RED = DIGITAL INPUT OPEN**
- **YELLOW = DIGITAL INPUT NOT USED**

The Pull down menu at the right of each description describes the type of intervention that the reactor undertake in case the relevant digital input is triggered:

- **TYPE " W "** (WARNING)
- **TYPE " H "** (HYDROGEN)
- **TYPE " N "** (NITROGEN)

For troubleshooting purpose it is important know from where the digital inputs are coming:

- From 001 to 024 are displayed the alarm coming from A-71 board.
- From 025 to 040 are displayed the alarm coming from A-23 board.
- From 041 to 064 are displayed the alarm coming from A-43 board.

Note:
The intervention type for H2 and N2 types alarms has been set for default by LPE.

PE2061 digital input list:

001. PRESS BELL A WARNING
It corresponds to pressure switch #1 of A station.
The "press bell A warning" is activated when bell pressure exceeds 5 mbar approx.

002. PRESS BELL A ALARM
It corresponds to pressure switch #2 of the A station.
The " press bell A alarm" is activated when bell pressure exceeds 15 mbar approx.

003. THERMAL SWITCH PLATE A (and BELL JAR CAP A)
Thermal switch relative to water cooling of shutter plate and bell jar cap A.
The "Thermal sw. plate A" alarm is released when water temperature exceeds 60 °C.

Note: THERMAL SW BELL CAP A/B led (10) is not active, since the function has been divided and integrated in THERMAL SW PLATE A and B

004. FLOW SWITCH PLATE A (and BELL JAR CAP A)
Flow switch relative to water cooling branch of shutter plate and bell jar cap A.
The "flow switch plate A" alarm is released when water flow drop below 4 litre par minute.

Note: shutter plate and bell jar cap are water cooled ONLY when the relevant bell-jar is in one of the following conditions:
PRE H2
PROCESS
POST H2
Hence, if one bell-jar is in nitrogen, the shutter plate is not water-cooled and the relevant digital input will be open.

Note: FLOW SW BELL CAP A/B led (11) is not active, since the function has been divided and integrated in FLOW SW PLATE A and B

005. THERMAL SWITCH COIL A
Thermal switch relative to water cooling system branch of A station induction coil.
The "Thermal sw. coil A" alarm is released when water temperature exceeds 60 °C.

006. FLOW SWITCH COIL A
Flow switch relative to water cooling system branch of the A station induction coil.
The "flow sw. coil A" alarm is released when water flow drop below 19 litre par minute

Note: induction coil as well than shutter plates and bell-jar cap are water cooled ONLY when the relevant bell-jar is in one of the following conditions:

PRE H2
PROCESS
POST H2

Hence, if one bell-jar is in nitrogen, the shutter plate is not water-cooled and the relevant digital input is open.

007. THERMAL SWITCH PLATE B (and BELL JAR CAP B)
Thermal switch relative to water cooling system branch of B station base plate and bell jar cap.
The "Thermal sw. plate B" alarm is released when water temperature exceeds 60 °C.

Note: THERMAL SW BELL CAP A/B led (10) is not active, since the function has been divided and integrated in THERMAL SW PLATE A and B

008. FLOW SW PLATE B (and BELL JAR CAP B)
Flow switch relative to water cooling system branch of station B shutter plate and bell jar cap.
The "flow switch plate B" alarm is released when water flow drop below 4 litre par minute.
Note: shutter plate and bell jar cap are water cooled ONLY when the relevant bell-jar is in one of the following conditions:

PRE H2
PROCESS
POST H2

Hence, if one bell-jar is in nitrogen, the shutter plate is not water-cooled and the relevant digital input will be open.

Note: FLOW SW BELL CAP A/B led (11) is not active, since the function has been divided and integrated in FLOW SW PLATE A and B

009. THERMAL SWITCH COIL B
Thermal switch relative to water cooling system branch of B station induction coil.
The "Thermal sw. coil B" alarm is released when water temperature exceeds 60 °C.

010. FLOW SWITCH COIL B
Flow switch relative to water cooling system branch of the B station induction coil.
The "flow sw. coil B" alarm is released when water flow drop below 19 litre par minute.

Note: induction coil as well than shutter plate and bell jar cap is water cooled ONLY when the relevant bell-jar is in one of the following conditions:

PRE H2
PROCESS
POST H2

Hence, if one bell-jar is in nitrogen, the shutter plate is not water-cooled and the relevant digital input will be open.

011. NO ACTIVE
See 2

012. NO ACTIVE
See 3

013. THERMAL SWITCH CAPACITORS
Thermal switch relative to the water cooling circuit branch of capacitors and profiling coils
The "Thermal sw. capacitor" alarm is released when water temperature exceeds 70 °C.

014. FLOW SWITCH CAPACITORS
Flow switch relative to the water cooling circuit branch of capacitors and profiling coils.
The "flow sw. capacitor" alarm is released when water flow drop below 4 litre par minute

015. THERMAL SWITCH AIR
Thermal switch relative to air temperature of bell-jar air cooling.
The "Thermal sw. air" alarm is released when air temperature exceeds 40 °C.

016. SAFETY SWITCH LIFT PORT A
Series between micro switch on lift door and photocell switch of quartz-guard of station A.
The "safety sw. lift port A" alarm is released if during the movement of the lift:
- The lift door is open.
- The quartz saver are out from the loading station table.

017. EMERGENCY WATER
It is a feed back contact from the timer of the emergency water circuit.
The "emergency water" alarm is released when the emergency water circuit is in function.

018. SAFETY SWITCH RP PORT
Micro switch on reduced pressure system door.
The "safety sw rp port" warning message is released when the reduce pressure system door is open.

Note:
This digital input is available only if is available the reduced pressure system.

019. LIMIT SWITCH LIFT UP A
Upper proximity switch for station A lift.
This proximity switch assents clamps' self-locking and stops lift motor.

020. LIMIT SWITCH LIFT DOWN A
Lower proximity switch for station A lift.
This proximity switch stops lift motor.

021. LIMIT SWITCH CLAMP A CLOSED (INTERNAL)
Proximity switch on internal clamp for A station.
It detects complete closing of relevant clamp.
The " limit sw clamp A closed int" message is released if during lift movement, the relevant clamp is not correctly positioned.

022. LIMIT SWITCH CLAMP A CLOSED (EXTERNAL)
Proximity switch on external clamp for A station.
It detects complete closing of relevant clamp.
The "limit sw clamp A closed ext" message is released if during lift movement, the relevant clamp is not correctly positioned.

023. CLAMP A OPEN
Signal coming from the preamplifier board of Station A. This board manages the signals coming from two magnetic micro switches, connected in series. They are located on clamp pistons and detect the clamp's complete opening.

The "clamp A open" message is released if during lift movement, the relevant clamp is not correctly positioned.

024. ROTATION FOOT SWITCH A
Input connected to pedal for rotation of A station susceptor.
If the bell-jar is open and the pedal pressed, susceptor rotation starts at 4 rpm.

025. REACTOR LEAK WARNING
It is connected to the Hydrogen sensor on the top reactor area.
The "reactor leak warning" is released when the H2 value on the top reactor area exceeds 10 % of L.E.L.

026. REACTOR H2 LEAK ALARM
It is connected to the Hydrogen sensor on the top reactor area.
The "reactor leak alarm" is released when the H2 value on the top reactor area exceeds 20 % of L.E.L.

027. GAS PANEL H2 LEAK WARNING
It is connected to the Hydrogen sensor located on gas panel.
The "gas panel leak warning" the H2 value on gas panel exceeds 10% of L.E.L.

028. GAS PANEL H2 LEAK ALARM
It is connected to the Hydrogen sensor located on gas panel.
The "gas panel leak alarm" the H2 value on gas panel exceeds 20 % of L.E.L.

029. BLOWER MOTOR THERMAL SWITCH
It is connected to the blower motor thermal switch.
The" blower motor thermal switch" is released whether the switch relative to the main blower is in the OFF position.

030. LAMINAR FLOW
Pressure switch which detect laminar flow pressure.
The "laminar flow" warning message is released when the pressure of the laminar flow drop below 1mBar.

031. POWER FAIL
It has to be connected to the UPS when available and, in this case, it detects power failures.
The "power fail" alarm is released when there is a loss of UPS power supply.

032. EXHAUST AIR SWITCH
Pressure switch relative to exhaust air suction.
The "exhaust air sw" alarm message is released when the vacuum in the exhaust air circuit exceed –3 mBar.

033. THERMAL SW COMPUTER AIR
Thermal switch located inside the computer cabinet.

The "thermal sw. computer air" warning message is released when the temperature inside the computer cabinet exceed 40° C.

Note:

If this alarm persists for more than 2 min the reactor will be automatically switched off.

034. O-RING LEAK TEST A

Vacuum switch relative to vacuum between O-rings of station A shutter plates and bell-jar caps.

The "O-ring A leak" alarm messages is released if the vacuum between the o-ring drop below –0.6 Bar.

The "vacuum between o-ring" alarm is released if at the opening of the shutter plate A persist vacuum between the shutter plate O-ring.

035. SAFETY SWITCH COMPUTER PORT

Switch relative to the doors of computer cabinet.
The "safety sw computer port" warning message is released when the computer port is open.

036. O-RING LEAK TEST B

Vacuum switch relative to vacuum between O-rings of station B shutter plates and bell-jar caps.
The "O-ring B leak" alarm message is released if the vacuum between the o-ring drops below –0.6 Bar.

The "vacuum between o-ring" alarm is released if at the opening of the shutter plate B persist vacuum between the shutter plate O-ring.

037. PRESSURE SWITCH SPOILER

Pressure switch to detect the spoiler position.

038. BUBBLER T.C.OUT OF RANGE

Signal coming from LPE' bubbler thermal controller.
The "bubbler t.c. out of range" warning is released if the LPE bubbler thermal controller detects a difference between the set point temperature and the real one.

039. SCRUBBER EMISSION

It is connected to Hydrogen sensor in Scrubber.

040. H2 LEAK SENSORS FAULT

Fault contact coming from H2 leak detector boards.The"H2 leak sensor fault" alarm message is released if there is any fault on the two hydrogen sensors boards.

041. PRESS SWITCH BELL B WARNING

It corresponds to pressure switch #1 of B station.
The "press bell B warning" is activated when bell pressure exceeds 5 mbar approx.

042. PRESS SWITCH BELL B ALARM

It corresponds to pressure switch #2 of B station.
The "press bell B alarm" is activated when bell pressure exceeds 15 mbar approx.

043. PRESS SWITCH COMPRESSED AIR

Pressure switch inside gas panel cabinet, it detects compressed-air shortage.
The "press sw compressed air" alarm message is released when the compressed air pressure is below 5 Bar.

044. BUBBLER 1/2/3 ALARM

Magnetic micro switch in bubbler sensor, which detects the alarm level. In case of two or three bubbler connected to the reactor, this alarm is the series of the two or three magnetic micro switch.

The "Bubbler 1/2/3 alarm" is released when the silicon level inside any of the bubblers connected to the rector exceed the alarm micro switch.

045. AIR FLOW SENSOR

Pressure switch to detect the shortage of bell-jars cooling air.
The "air flow sensor" alarm message is released if the cooling air pressure is below 2/3 mbar.

046. SCRUBBER TROUBLE

It is connected to a feed back contact coming from the scrubber.
The "scrubber trouble" alarm message is released when the scrubber is switched OFF.

047. SAFETY SWITCH PORT A

Series of micro switch to detect presence of the panel in the following zones:

- Induction coil station A.
- Capacitors station A.

The "safety sw port A" alarm message is released when any of the above protection panel is open.

048. SAFETY SWITCH PORT B

Series of micro switch to detect presence of the panel in the following areas:

- Induction coil station B.
- Capacitors station B.
- Upper rear door.

The "safety sw port B" alarm message is released when any of the above protection panel is open.

049. SPOILER IN A

Proximity switch to detect the presence of the spoiler in A station. The spoiler directs the air to B station.
The "spoiler trouble" alarm message is released if spoiler not activates correctly this proximity switch.

050. SPOILER IN B

Proximity switch to detect the presence of the spoiler in B station. The spoiler directs the air to A station.
The "spoiler trouble" alarm message is released if spoiler not activates correctly this proximity switch.

051. BUBBLER 1

Magnetic micro switch to check silicon level in bubbler # 1.
The "bubbler empty" warning messages is released if the silicon level is below the level micro switch.

Note:

- If the led is red the bubbler is full.
- If the led is green the bubbler is empty.

052. BUBBLER 2
See 50, but refer to bubbler 2.

053. FRONT SHIELD CLOSED
Micro switch to check whether the front shield is closed.
The "front shield open" message is released when from "lift" menu, is given the open command to any lift and the shield is open.

054. N2 VACUUM PUMP
Pressure switch located on the N2 circuit of the low pressure system.
The "N2 vacuum pump" alarm messages is released when N2 pressure in the vacuum pump is below 1 bar.

055. SAFETY SWITCH LIFT B PORT
Series between micro switch on lift door and photocell switch of quartz-guard station B.
The "safety sw. lift port B" alarm is released if during lift movement:
- The lift door is open.
- The quart saver are out from the loading station table.

056. BUBBLER 3 LEVEL
See 50, but refer to bubbler 3.

057. VACUUM PUMP TROUBLE
Auxiliary contact located on low pressure system power box.
The "vacuum pump trouble" alarm message is released when the vacuum pump is OFF.

058. COMP. AIR VACUUM VALVE
Pressure switch located on the compressed air circuit of the low pressure system.
The "compressed air vacuum valve" alarm message is released when the compressed air pressure is below 5/6 bar.

059. LIMIT SWITCH LIFT UP B
Upper proximity switch for lift B.
This proximity switch assents clamps' self-locking and stops lift motor.

060. LIMIT SWITCH LIFT DOWN B
Lower proximity switch for lift B.
This proximity switch stops lift motor.

061. LIMIT SWITCH CLAMP B CLOSED (INTERNAL)
Proximity switch on internal clamp for A station.
It detects complete closing of relevant clamp.
The " limit sw clamp B closed int" message is released if during lift movement, the relevant clamp is not correctly positioned.

062. LIMIT SWITCH CLAMP B CLOSED (EXTERNAL)
Proximity switch on external clamp for B station.
It detects complete closing of relevant clamp.
The " limit sw clamp B closed ext" message is released if during lift movement, the relevant clamp is not correctly positioned.

063. CLAMP B OPEN

Signal coming from preamplifier board of Station B. This board manages the signals coming from two magnetic micro switches, connected in series. They are located on clamp pistons and detect the clamp's complete opening.

The "clamp B open" message is released if during lift movement, the relevant clamp is not correctly positioned.

064. ROTATION FOOT SWITCH B

Input connected to pedal for rotation of B station susceptor.
If the bell-jar is open and the pedal pressed, susceptor rotation starts at 4 rpm.

Buttons:

- Send: by means of this command any change performed to the Reactor Configuration menu is saved in the workstation hard disk and the whole configuration is send to the reactor VME rack.
- Cancel: by means of this command it is possible exit to this menu without saving the parameters to the workstation and without sending it to the reactor VME rack.

Note:

This window must be configured only the first time that the reactor is switched ON during the start up. After the first configuration these values are stored permanently on the workstation hard disk. It is strongly suggested to back up the configuration file, following the instruction of the paragraph "Backup Configurations files"

10.4 Reactor Consumption

This window allows to view some basic information about reactor and to set threshold.

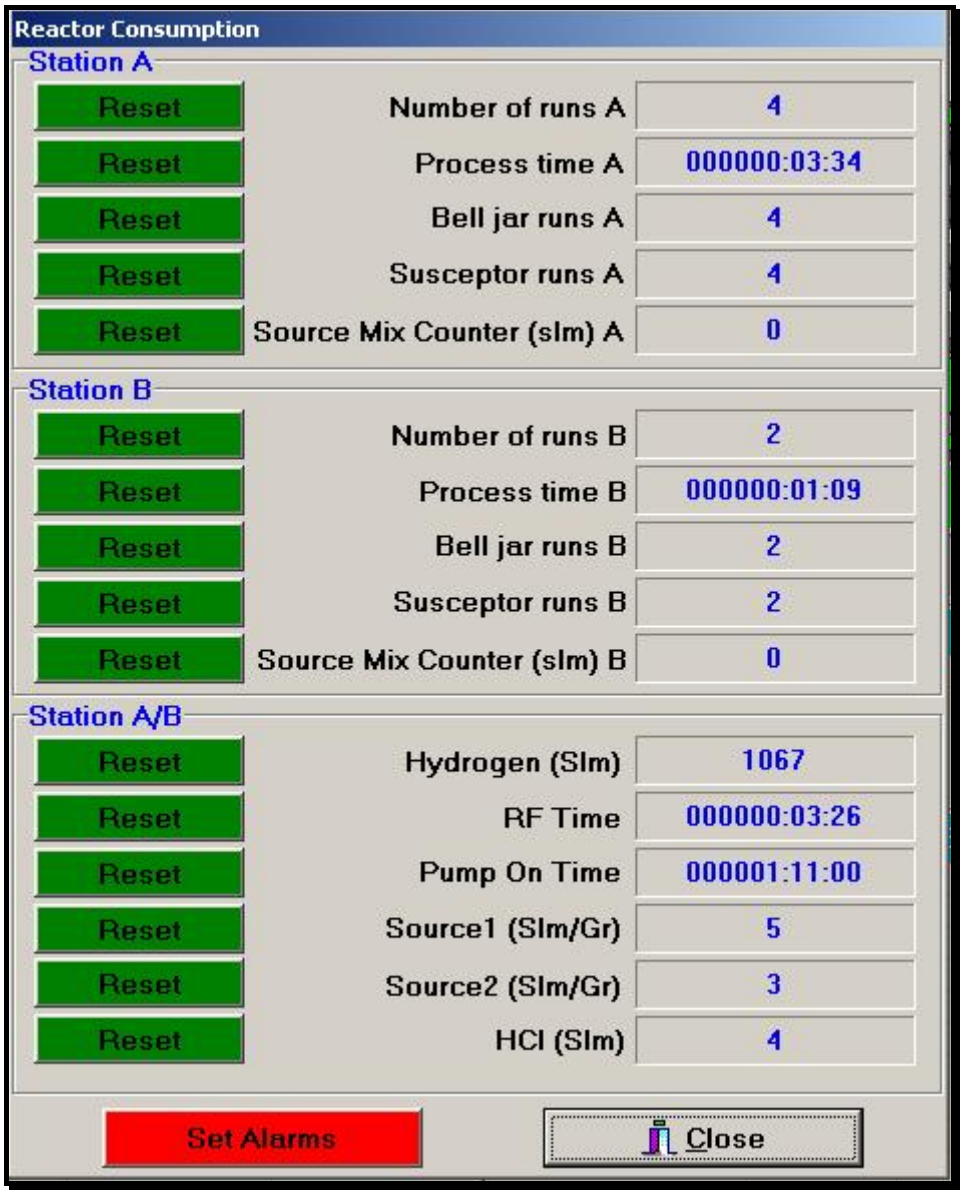

Station A

- Number of cycles on station A.
- Total time with station A in process.
- Number of A side bell-jar cycles.
- Number of A side susceptor cycles.
- Total Source consumption (either from Source 1, either from Source 2) flowing trough the station A.

Station B

- Number of cycles on station B.
- Total time with station B in process.
- Number of B side bell-jar cycles.
- Number of B side susceptor cycles.
- Total Source consumption (either from Source 1 ,either from Source 2) flowing trough the station B.

Station A/B

- Total hydrogen consumption (Slm).
- Total generator time with radio frequency ON.
- Total time with low pressure pump ON.
- Total Source 1 consumption (grams).
- Total Source 2 consumption (grams).
- Total HCL consumption (Slm).

On every use of RUN command, if a threshold is exceeded, the REACTOR CONSUMPTION window will be displayed indicating in yellow color the thresholds exceeded.

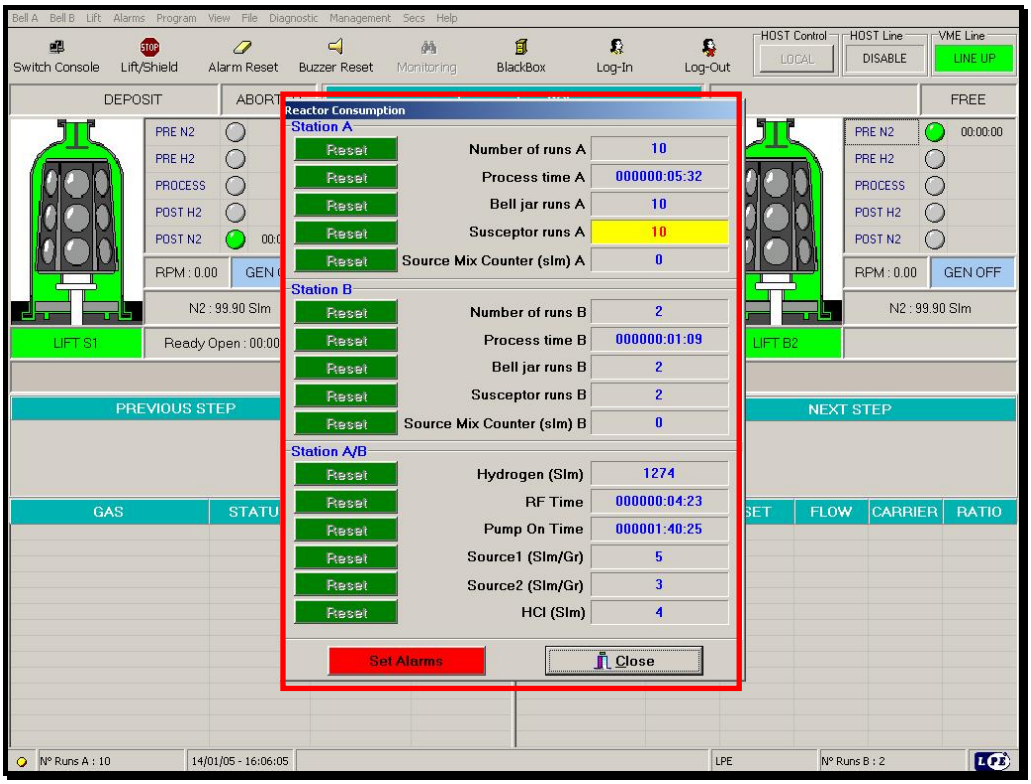

For instance, this command is useful when making preventive maintenance every "x" hours or cycles or when changing silicon or HCl bottle every "x" kilograms or liters.

Buttons

- Reset: clears the recorded data and set the field to 0.
- Set Alarms: the following window will appear and it is possible to set the alarm threshold:

Station A

- Number of A side bell-jar cycles (from 0 to 9999999).
- Number of A side susceptor cycles (from 0 to 9999999).
- Total Source consumption (either from Source 1 ,either from Source 2) flowing trough the station A (from 0 to 9999999).

Station B

- Number of B side bell-jar cycles (from 0 to 9999999).
- Number of B side susceptor cycles (from 0 to 9999999).
- Total Source consumption (either from Source 1 ,either from Source 2) flowing trough the station B (from 0 to 9999999).

Station A/B

- Total generator time with radio frequency ON (from 0 to 9999999).
- Total time with low pressure pump ON (from 0 to 9999999).
- Total Source 1 consumption in grams if the reactor gas panel is equipped with the SOURCE vaporizer and SLM if the reactor gas panel is equipped with MFC.
- Total Source 2 consumption in grams if the reactor gas panel is equipped with the SOURCE vaporizer and SLM if the reactor gas panel is equipped with MFC.
- Total HCL consumption (Slm).

Buttons

- Ok: acknowledges changes and closes window
- Cancel: closes window without acknowledging

10.5 Reactor Communication

This window allows setting the COM port serial line number used to communicate with reactor.

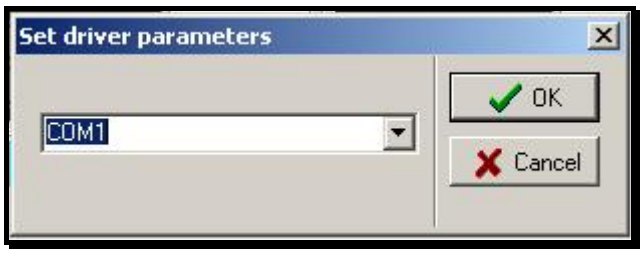

Select by means of the pull down menu the COM port and than click to the OK button.

Buttons

- Ok: acknowledges changes and closes window.
- Cancel: closes window without acknowledging.

10.6 Lift Management

These commands are only for skilled servicemen trained in the use of PE2061 and Pe2061S Epitaxial Reactor.

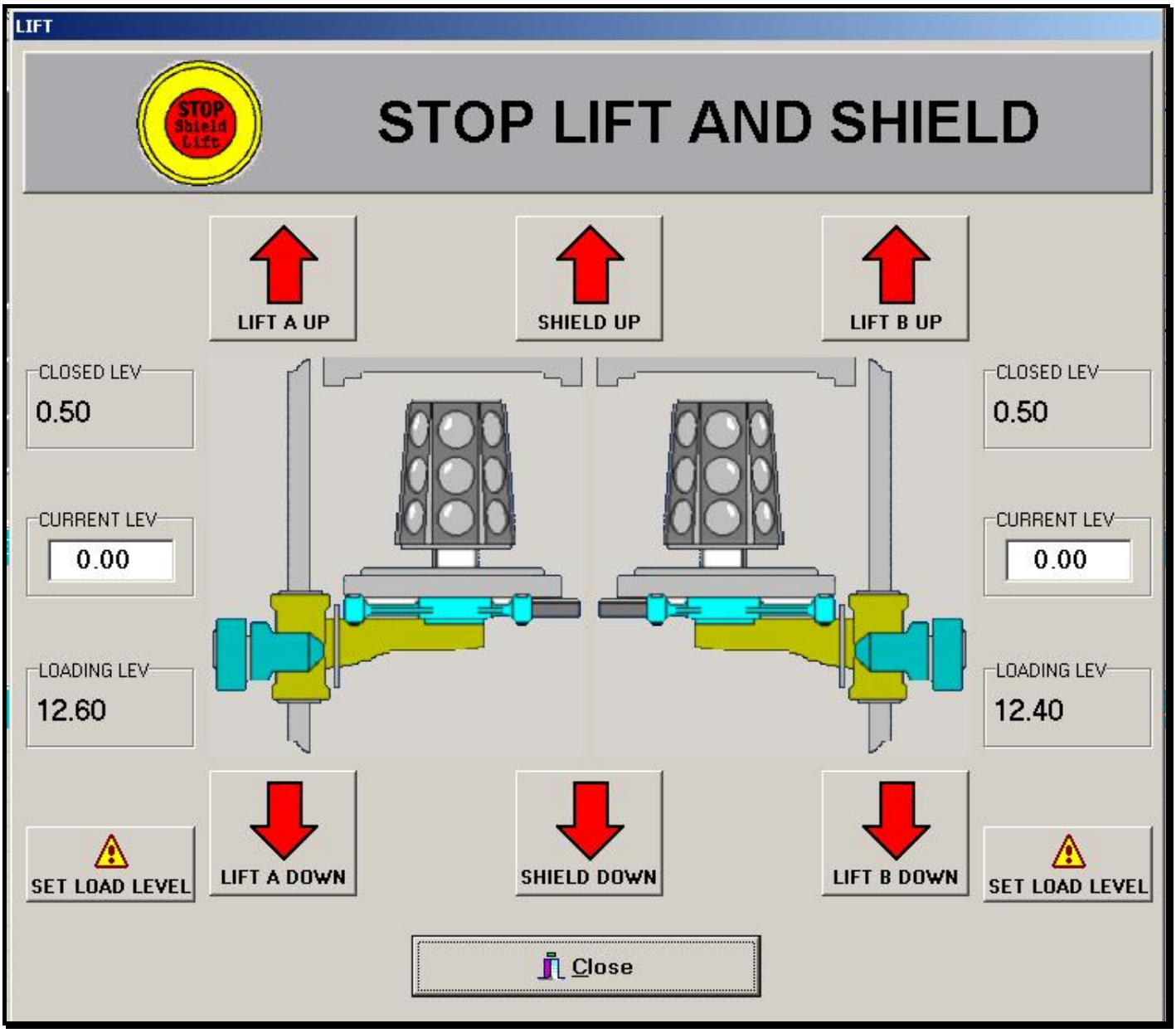

IMPORTANT !!!
Vice versa than the Lift window reserved to the operator the Management of Lift window, allows to move the lift even if the alarm "**safety switch lift A/B port"** is active and the **shield** is **up.**
As a remainder to don't forget that the lift software protection are not active at any access to this window the following messages is displayed:

> **DANGER!!!**
> **Make sure quartz-guards are retracted inside the table or the front table has been removed from reactor**

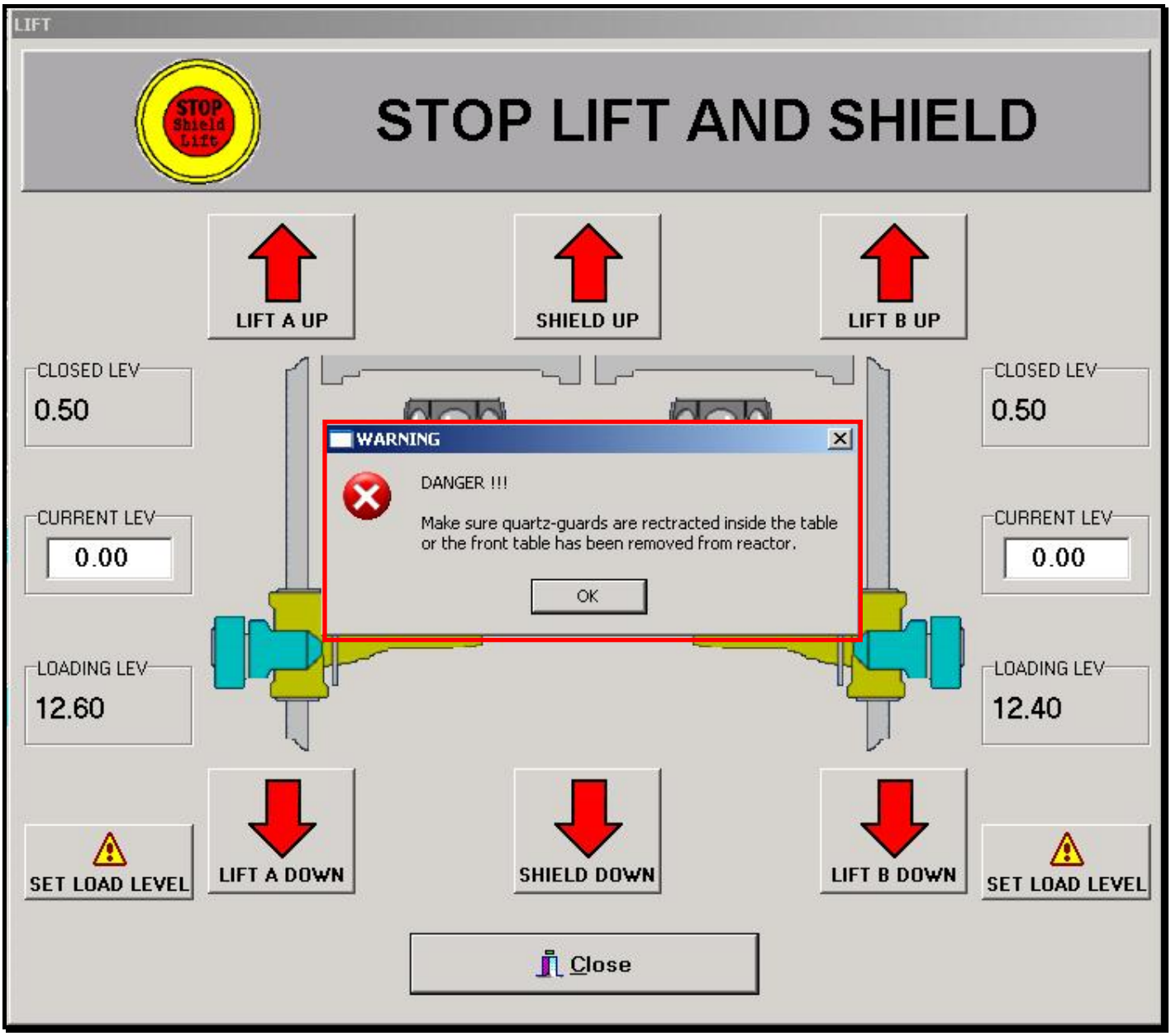

By selecting the correspondent arrow button is possible move:
- The shield.
- The lift for chamber A.
- The lift for chamber B.

The motion of the lift is shown on the **"Current level"** field and on the bell-jar CRT screen.
The **"Current level"** is the feedback from a potentiometer mounted on each lift.
The value displayed is on Vdc.

Note:
When lift is completely up, in the bell-jar CRT screen the susceptor picture will appear, and in the **"current level"** field will be displayed the value of **0,50 Vdc**.
The lift A or B and the shield will stop automatically as soon they reach they relative limit sensors.
Click the **STOP Lift/Shield** button key to stop the lift or the shield in a position other than the one related to their limit sensors.
The two lifts and the shield **CANNOT** be moved simultaneously.

Buttons:
- **LIFT A UP**: by means of this command the A side lift moves UP.
- **LIFT A DOWN:** by means of this command the A side lift moves DOWN.
- **LIFT B UP:** by means of this command the B side lift moves DOWN.
- **LIFT B DOWN**: by means of this command the B side lift moves DOWN.
- **SHIELD UP:** by means of this command the A side lift moves DOWN.
- **SHIELD DOWN:** by means of this command the A side lift moves DOWN.
- **STOP LIFT AND SHIELD:** by means of this command the lift or shield in movement STOPS.
- **SET LOAD LEVEL A:** set the A side lift loading/unloading level
- **SET LOAD LEVEL B:** set the B side lift loading/unloading level
- **CLOSE:** closes window and in case STOPS the lift or shied in movement.

10.6.1 Set the Lift Loading/Unloading level

The Lift Management window allows choosing susceptor **loading/unloading** position.
This position will be valid only when lowering the lift from the "lift" menu used by the reactor operator. It is not valid in the Lift Management window.

Set the A- side Loading/Unloading level

1. Lower the lift A by using it's own bottom arrow button.
2. When the lift has reached the desired position, press the " **STOP Lift/Shield** " red button.
3. Press now the **"Set load level"** button and the corresponding lift position will be saved. The **"Load level"** field will show the same value than the **"current level"** field.

Set the B- side Loading/Unloading level

1. Lower the lift B by using it's own bottom arrow button.
2. When the lift has reached the desired position, press the " **STOP Lift/Shield** " red button.
3. Press now the **"Set load level"** button and the corresponding lift position will be saved. The **"Load level"** field will show the same value than the **"current level"** field.

Note:
Loading level value outside 10 to 14 Vdc range, will not be accepted and a denying window appears.

10.7 VME Configuration

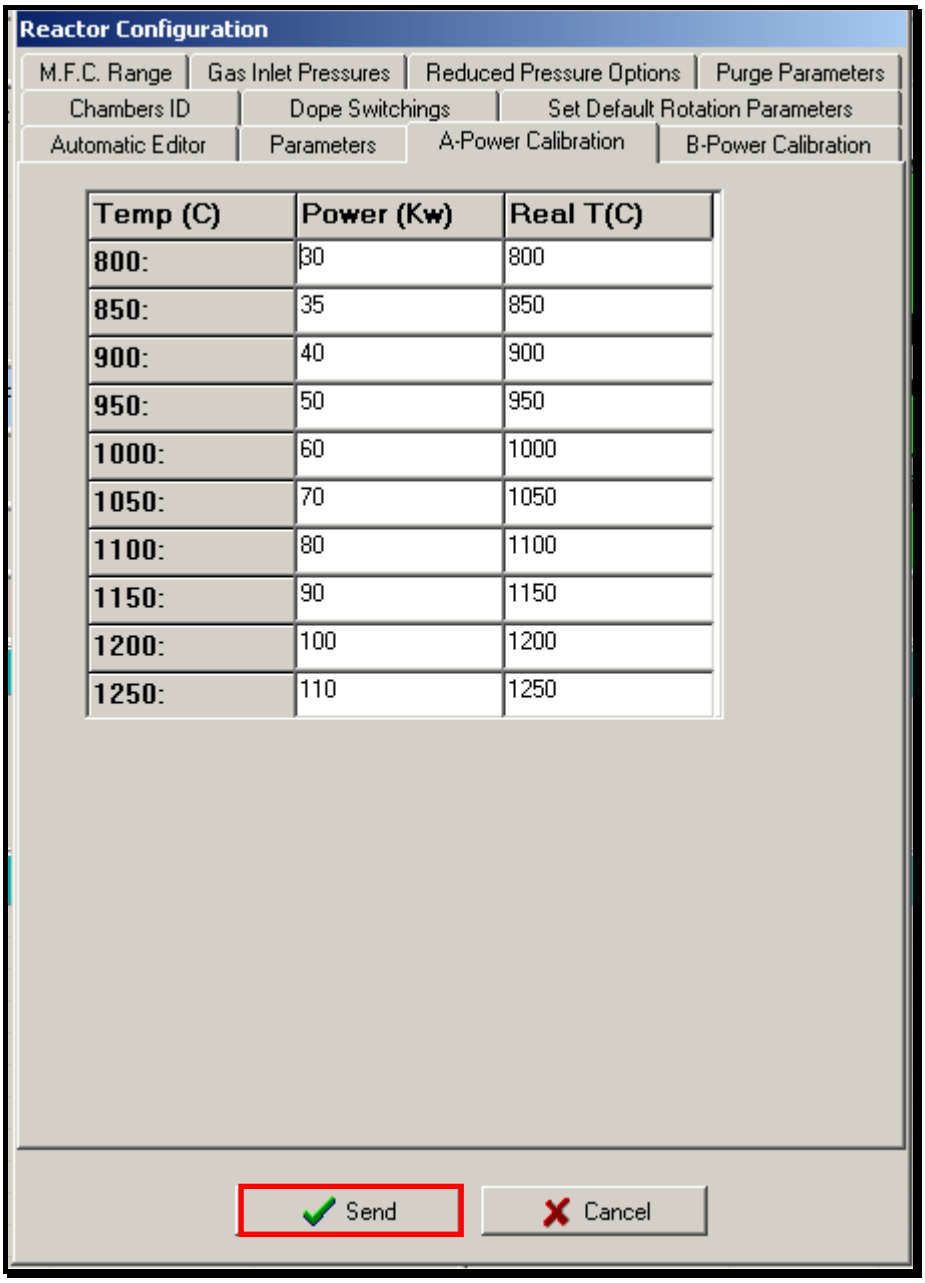

Temp (C)	Power (Kw)	Real T(C)
800:	30	800
850:	35	850
900:	40	900
950:	50	950
1000:	60	1000
1050:	70	1050
1100:	80	1100
1150:	90	1150
1200:	100	1200
1250:	110	1250

With the Send command, it is possible to send all configuration parameters to VME rack.

- A confirmation is required before to send the parameters.
- During execution of this command a progress bar will shown the status of the download.
- A confirmation message or an error message appears if the download has been executed correctly or not.

The transfer of configuration parameters takes only few seconds.

10.8 Switch Console Configuration

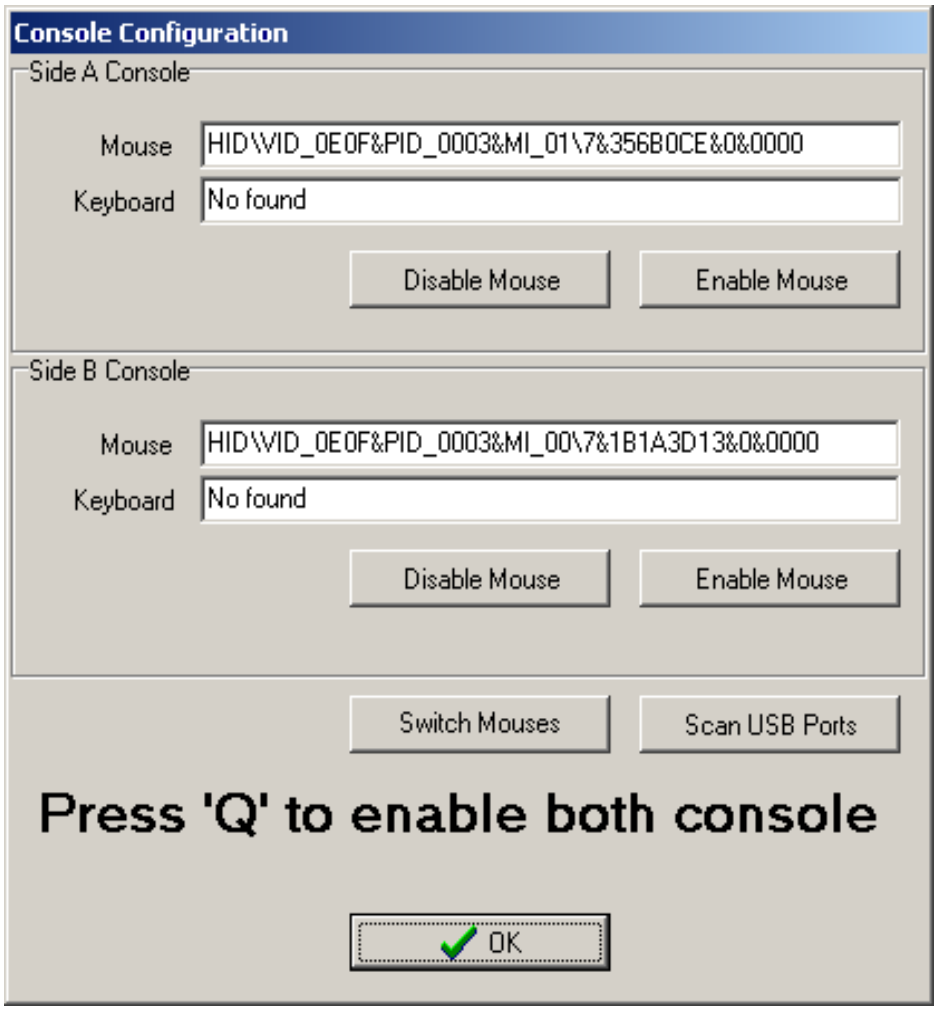

This window, protected by a password, allows to set the console parameters. Clicking 'Q' will enable both consoles, useful to check the correct mouses and keyboards assignments. Clicking OK will always enable the designated Clean Room Console, disabling the Maintenance Room.

Mouse Identifier of the physical mouse, as it is seen by the operating system
Keyboard Identifier of the physical keyboard, as it is seen by the operating system
Enable Mouse Buttons Click to enable the console mouse. Useful to check the correct assignment of the consoles.
Disable Mouse Buttons Click to disable the console mouse. Useful to check the correct assignment of the consoles.
Scan USB Ports Buttons Click to perform the USB ports scan and to configure the clean room and grey room consoles.
OK Button Click to confirm and save. In any case it will be enabled the Clean Room Console.
Switch Mouses Button In case the detection sets the mouses crossed respect to the keyboards, with this command they will be switched in the right position

10.9 Switch Console Management

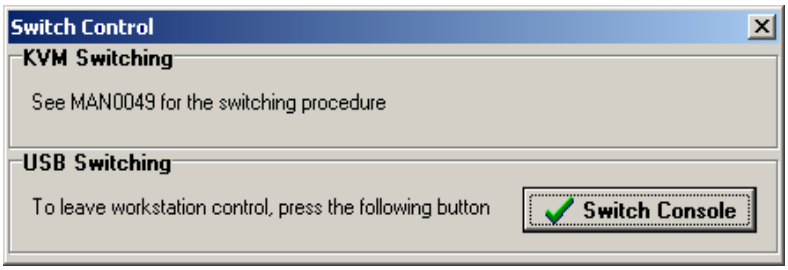

This window allows the safe console switching
Switch Console Button: In case the reactor is provided with the software built-in USB switching system, click to transfer the control to the other console.

- ⇒ If the gray-room operator is controlling the reactor, the clean-room station cannot gain control of the PC, unless the gray-room operator clicks this button
- ⇒ If the clean-room operator is controlling the reactor, the grey-room station cannot gain control of the PC, unless the clean-room operator clicks this button

10.10 Reactor Shutdown

The reactor shutdown command switches OFF the reactor correctly.
Unlike "Reactor and station shutdown" command, the workstation is not switched off.

10.11 Application Shutdown

The Application shutdown command is used to exit from the application and close the program correctly.

Unlike "PC shutdown" command, the workstation is not switched off.

10.12 PC Shutdown

The PC shutdown command is used to exit from the application and to ensure a correct shutdown of the workstation.

⚠ **CAUTION** The Workstation should be switched off by using the commands available into GUI or by means of Windows OS std. procedure.
A power fault or improper shutdown procedure may damage the file system.

10.13 Reactor & PC Shutdown

The reactor & PC Shutdown command is used to switch off the reactor, exit from the application and switch off the workstation correctly.

> ⚠ **CAUTION** The Workstation should be switched off by using the commands available into GUI or by means of Windows OS std. procedure.
> A power fault or improper shutdown procedure may damage the file system.

10.14 Emergency Shutdown

In case of an emergency situation, push one of the two red emergency buttons.
One is located above the clean room loading area, the other at the rear of the reactor above the computer cabinet.

> ⚠ **CAUTION** By pressing either of the emergency buttons, reactor and generator will be switched-off completely, independently of reactor situation and susceptor temperature.

Reactor Emergency Power Off

Activation of the Reactor Emergency Power Off will cause:

A. All power in the reactor is turned off.
B. Nitrogen purge begins (through a normally open valves).
C. Induction coils are no longer energized, because power supply to generator is turned off.
D. Reactor cooling air is turned off.

Activation of Reactor Emergency Power Off button will require manual restarting of the reactor and may damage epi wafers and reactor.

Generator Emergency Power Off

Activation of the Generator Emergency Power Off will cause:

A. Induction coils are no more energized, because power supply to generator is turned off.
B. Reactor power is maintained.
C. Reactor alarm level "H" is usually triggered.
D. Cooling air is maintained.
E. Cooling water is maintained.

10.15 Configuration Parameters

Even if the reactor configuration parameters are saved in the workstation hard disk and in the back-up floppy, it is always advisable save a copy in paper format.

During the reactor start up LPE engineer in cooperation with customer, are completing the Reactor Check List, where there is a section reserved to the reactor configuration parameters. The check list is usually placed in the pocket behind the electronic cabinet door.

Do not forget to keep it always updated !!

Here follow an example of the section reserved to the configuration parameter included in the reactor check list:

CONFIGURATION PARAMETERS

Reactor PE2061S

edited by LPE Engineer

MFC	Range
H2 main - FC1	
H2 purge - FC2	
N2 - FC3	
HCl - FC80 gas etch	
HCl - FC83 susceptor etch	
FC21 (Si) H2 calibration	
FC22 (Si) H2 calibration	
Dope 1 - FC53	
Dope 2 - FC63	
Dope 3 - FC73	
Inject 1 - FC52	
Inject 2 - FC62	
Inject 3 - FC72	
Dilute 1 - FC51	
Dilute 2 - FC61	
Dilute 3 - FC71	

	SiCl4	SiHCl3	SiH2Cl2	MFC
FC21 (Si) H2 calibration	☐	☐	☐	☐
FC22 (Si) H2 calibration	☐	☐	☐	☐

	N	P	N+	P+
Dope 1 - FC53	☐	☐	☐	☐
Dope 2 - FC63	☐	☐	☐	☐
Dope 3 - FC73	☐	☐	☐	☐

EXAMPLE

temperature	station A		station B	
Set point	Power	Real temp.	Power	Real temp
800				
850				
900				
950				
1000				
1050				
1100				
1150				
1200				
1250				
1300				
Pirometer type				
Emissivity set				

CONFIDENTIAL - Property of LPE S.p.A. - Any reproduction or disclosure forbidden without explicit consent of LPE S.p.A.

11 SECS

11.1 Communication Parameters

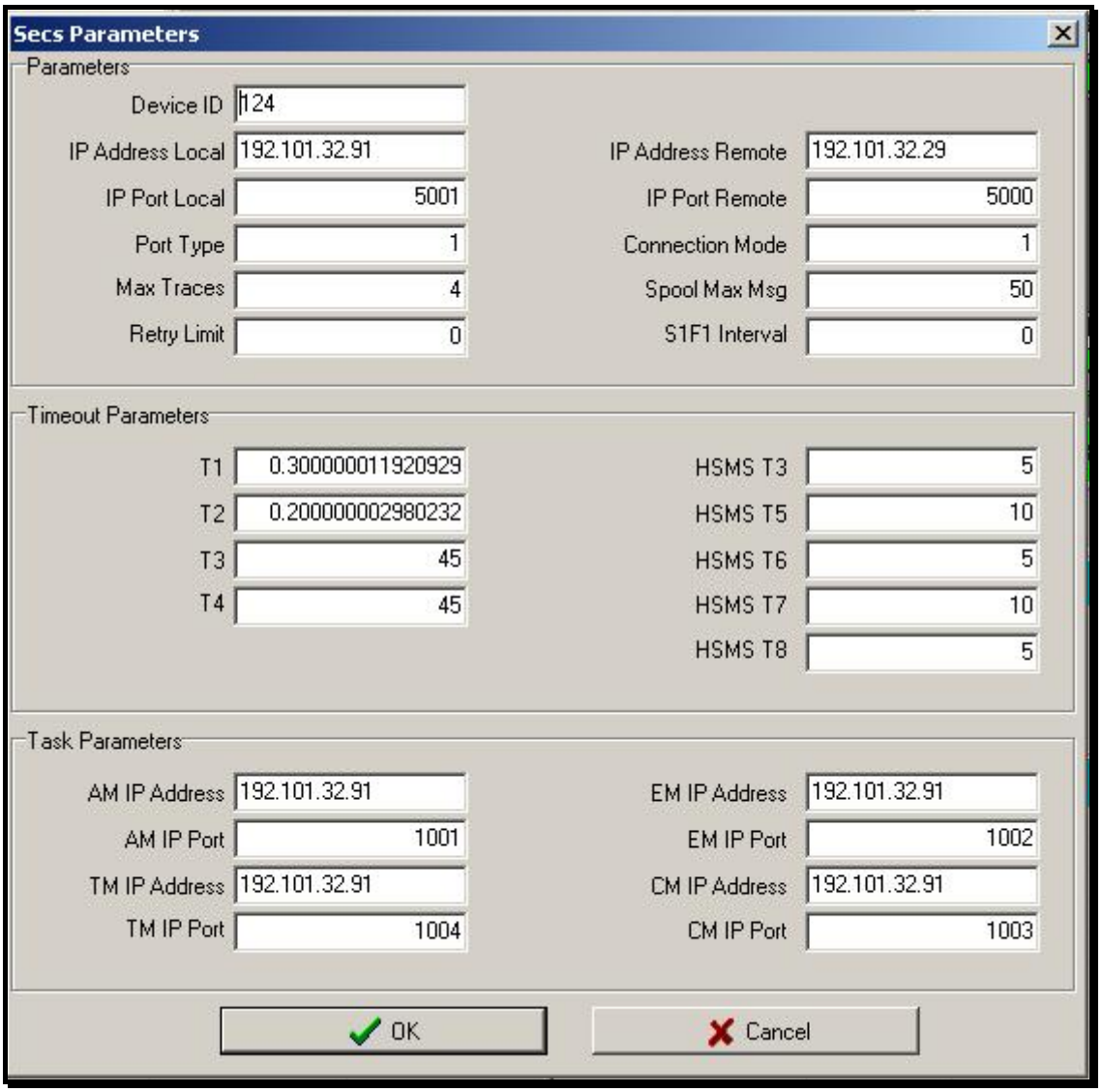

This window allows to set the following parameters:

- **Device ID:** unique identificator of the equipment in the SECS net.
- **IP Address Local:** IP address of local machine (i.e. the PC running GUI). This value must be the same of Windows NT. To check PC address, open a MS-Dos prompt and digit "ipconfig" followed by enter. The value to check is "IP Address". If PC value and PC Address Local value are differing, enter the correct value.
- **IP Address Remote:** IP address of remote machine (i.e. the PC running customers automation interface). This value must be set only by Automation people.
- **IP Port Local: TCP port used by LPE SECS interface to communicate with Customer's Automation interface.**
- **IP Port Remote:** TCP port used by Customer's Automation interface to communicate with LPE SECS interface.
- **Port Type:** parameter for communication type. Value can be 0, HSMS (TCP/IP)

- **Connection Mode:** parameter communication mode. Value can be1: SECS interface must establish communication
- **Max Trace:** max number of SECS traces activable. LPE strongly suggest not to set a value over 4.
- **Spool Max Msg:** max number of messages spoolable (i.e. recorded) in case of communication fault.
- **Retry Limit:** max number of retries in case of communication failure.
- **S1F1 Interval:** heartbeat (seconds per S1F1) with whom LPE SECS interface asks Customer's Automation Interface to confirm its presence (a 0 value means no heartbeat).
- **Tx Timeouts**: SECS I Timeouts in seconds (refer to SECS Manual or to SEMI standards for more details).
- **HSMS Tx Timeouts:** SECS II Timeouts in seconds (refer to SECS Manual or to SEMI standards for more details).
- **Task Parameters:** Parameters for the four tasks (Alarm Manager, Event Manager, Trace Manager and Command Manager) which LPE SECS Interface is made of.

Buttons:

- **OK:** confirm and save the variations.
- **Cancel:** close window without acknowledging.

11.2 View SECS Message

This window displays Secs messages between PC workstation and the HOST computer.

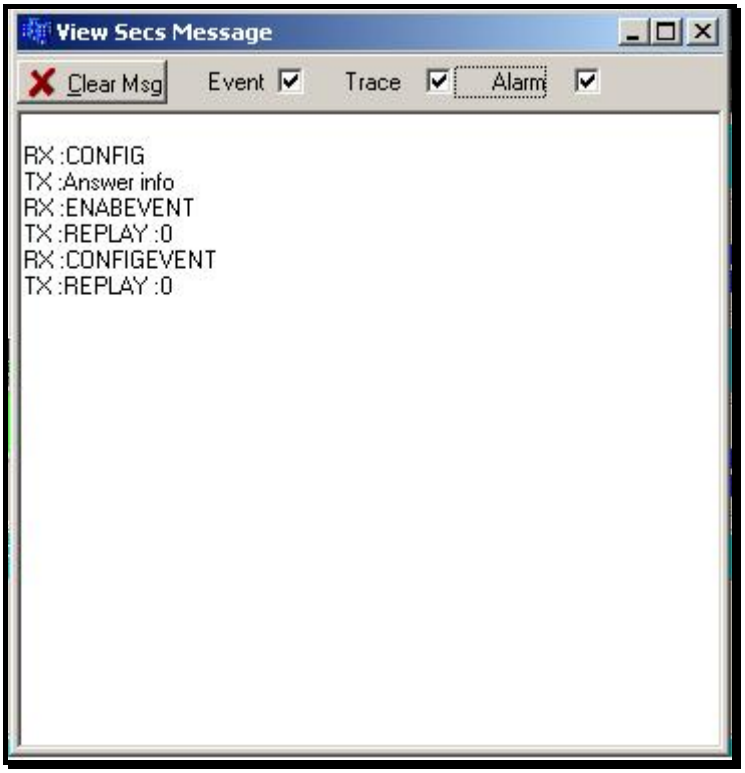

***** Checkboxes**:

If a checkbox is checked, will be displayed all the lines belonging to that category.

a) EVENTS: something modified the reactor state. For example, internal controller switched reactor from PREN2 to PREH2.

b) ERRORS: a wrong command has been given.

c) ALARMS: an alarm or a warning occurred on the reactor.

Buttons:

Clear message: all messages will be deleted.

To exit from this window click on the "**X**".

12 HELP

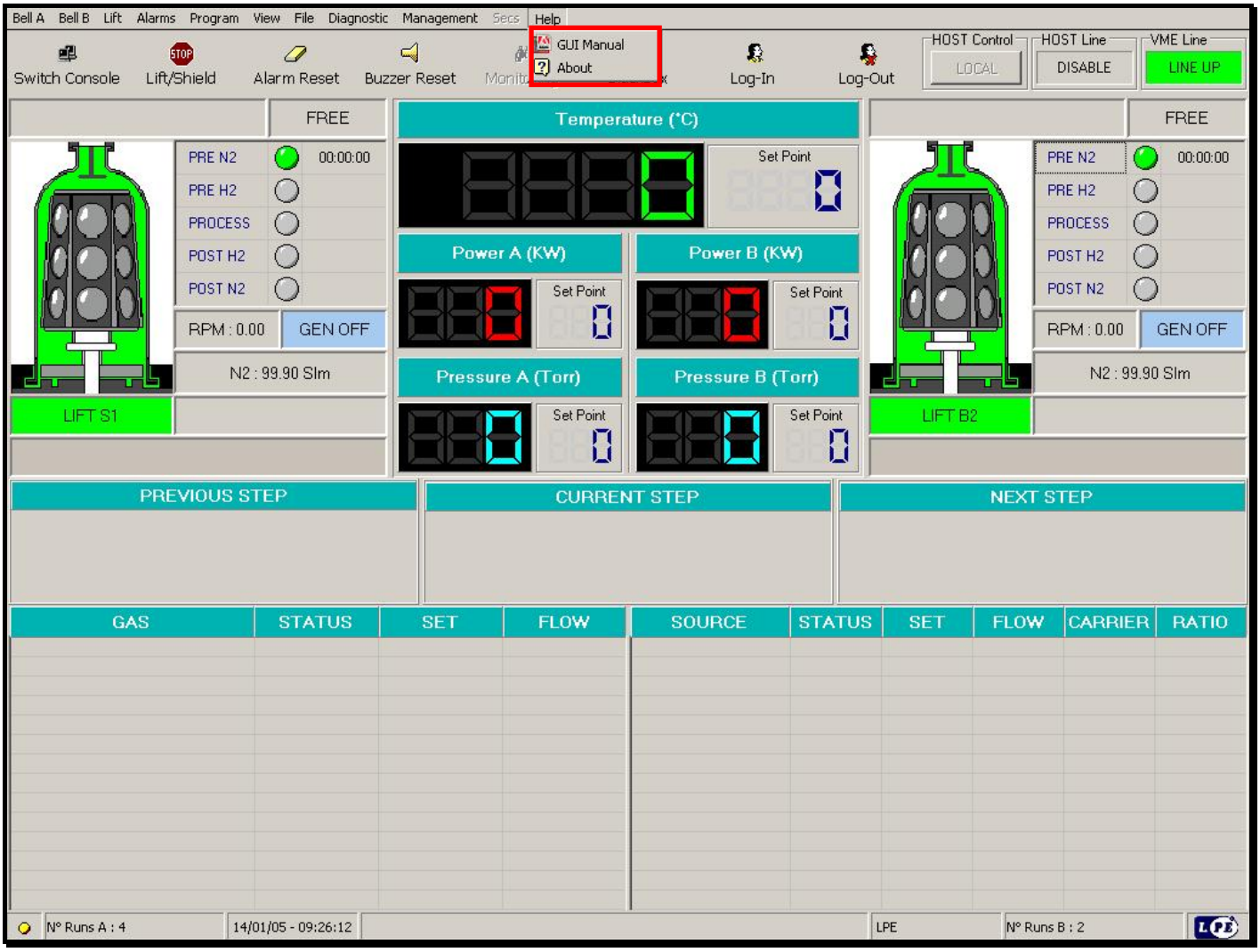

12.1 Access Level to Help menu

All users can access to the Help menu.

12.2 GUI manual

This command opens this manual in an Acrobat Reader window.
This window is independent from GUI.
Because GUI is an always full-screen application, if Acrobat Reader's window falls behind GUI, to recall it on top press contemporarily ALT+TAB.

12.3 About

This window displays the GUI and VME software versions.

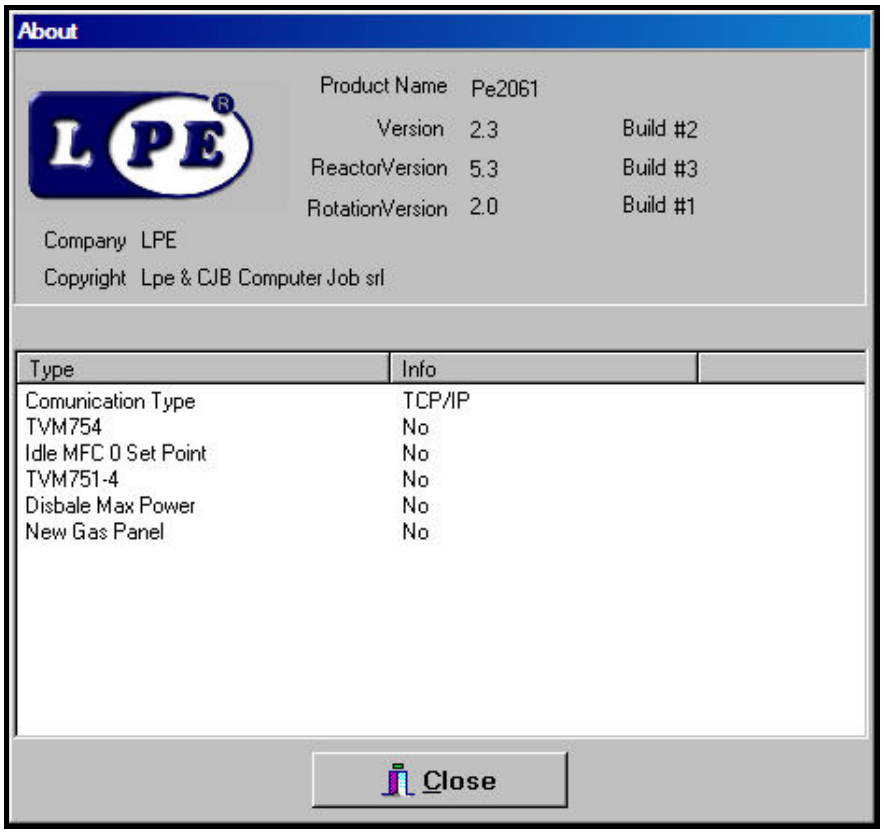

The **Help (About)** page allows acceding to the information about the program

- **Product Name:** displays the software name
- **Version:** displays the GUI software version.
- **Reactor Version:** displays the reactor VME CPU software version. (TVM231 or TVM220)
- **Rotation Version:** displays the reactor rotation VME CPU software version. (TVM231/ROT or TVM201)
- **Company:** shows the manufacturing Company complete name.
- **Copyright:** shows the name of the Company owning the Copyright rights
- **Type/Info:** displays additional information on hardware options installed
  - **Communication Type:** displays the type of communication between the PC workstation and the VME rack. It can be *TCP/IP* (only for LPE simulation) or *Serial* (default communication with reactor).
  - **Is TVM 754:** displays the TVM231 or TVM220 configuration dipswitch status. It can be *yes* (VME rack is equipped with TVM754 digital I/O boards) or *no* (VME rack is equipped with TVM7544 digital I/O boards).
  - **Zero Set Point:** displays the TVM231 or TVM220 configuration dipswitch status. It can be *yes* (when MFC are idle the set point is equal to 0 Vdc) or *no* (when MFC are idle the set point is equal to 0.25 Vdc).
  - **Is TVM751/4** displays the presence in the VME rack of the fourth TVM751 or TVM741.It can be *yes* (board present) or *no* (board absent).

Buttons:

- **Close:** allows to quit the About window.

13 LOG IN and LOG OUT from GUI

13.1 General notes about users and access level

LPE has defined typical user for 2061 and 2061s epitaxial reactors with relevant access to GUI menus.
By default the following users with relevant access levels are always presents at the first GUI start-up:

- **Supervisor:** it is reserved to the Department Responsible. It guarantees a full access to all GUI functions and it allows creating new users.
- **Supervisor Level 2:**it is reserved to Shift Supervisor. It guarantees a full access to all GUI/Reactor functions.
- **LPE:** it is reserved only to LPE engineers and is protected by LPE password. It guarantees a full access to all GUI/Reactor functions.
- **Process:** it is reserved to reactor process engineer. It guarantees a partial access to GUI/Reactor functions, mainly related to wafer production.
- **Maintenance** it is reserved to reactor maintenance engineer. It guarantees a partial access to GUI/Reactor functions, mainly related to maintenance, calibration and troubleshooting.
- **Operator:** it is reserved to reactor operator. It guarantees a partial access to GUI/Reactor functions mainly related to wafer handling.

It is **Supervisor** user responsibility to create new users and defines the access to GUI functions.
To each user corresponds an access level to GUI functions.

- **LPE Level1** = Full Access to all GUI functions and menus. It can't define new users.
- **Supervisor Level 2** = Full Access to all GUI functions and menus. It can't define new users.
- **Maintenance Level 3** = Partial Access. It guarantees access to all possible tasks that may involve a 2061 and 2061 reactor maintenance engineer.
- **Programme Level 4** = Partial Access. It guarantees access to all possible tasks that may involve a 2061 and 2061 reactor process engineer.
- **User Level 5** = Partial Access. It guarantees access to all possible tasks that may involve a 2061 and 2061 reactor operator.

13.2 Access Level Reference Table

GUI Menus and Buttons	Supervisor	LPE Lev 1	Supervisor Lev 2	Maintenance Lev 3	Programme Lev 4	User Lev 5
Bell A/B	F.A.	F.A.	F.A.	F.A.	F.A.	F.A.*
Run						
Start/Stop Hold						
Adjust Recipe Running						
Jump Step						
Process Abort						
Stop/Start Rotation						
Lift	F.A.	F.A.	F.A.	F.A.	F.A.	F.A.
Alarms	F.A.	F.A.	F.A.	F.A.	F.A.	F.A.
Program	F.A.	F.A.	F.A.	F.A.	F.A.	P.A
Edit Recipe						
Adjust recipe Running						F.A.*
Set Rotation Parameters						F.A.*
View	F.A.	F.A.	F.A.	F.A.	F.A.	F.A.
File	F.A.	F.A.	F.A.	P.A	P.A	N.A
Select Bell A recipes from floppy disk						
Select Bell B recipes from floppy disk						
Select Bell A recipes from hard disk						
Select Bell B recipes from hard disk						
Backup Configurations files				N.A	N.A	
Restore Configurations files				N.A	N.A	
Backup All Recipes						
Restore All Recipes						
Open Windows Explorer				N.A	N.A	
Open console [c:\]				N.A	N.A	
Diagnostic	F.A.	F.A.	F.A.	F.A.	N.A	N.A
Management	F.A.	F.A.	P.A	P.A		N.A
Reactor Configuration						
Reactor Installation			N.A	N.A		
Reactor Communication			N.A	N.A		
Reactor Consumption						
Lift Management						
Application Shutdown						
Reactor Shutdown						
PC Shutdown						
Reactor & PC Shutdown						
Secs	F.A.	F.A.	F.A.	N.A	N.A	N.A
Help	F.A.	F.A.	F.A.	F.A.	F.A.	F.A.
Switch Console	F.A.	F.A.	F.A.	F.A.	N.A	N.A
Stop Lift/Shield	F.A.	F.A.	F.A.	F.A.	F.A.	F.A.
Alarm Reset	F.A.	F.A.	F.A.	F.A.	F.A.	F.A.
Buzzer Reset	F.A.	F.A.	F.A.	F.A.	F.A.	F.A.
Black Box	F.A.	F.A.	F.A.	F.A.	F.A.	F.A.
Log In	F.A.	P.A	P.A	P.A	P.A	P.A
Security		N.A	N.A	N.A	N.A	N.A
Log Out	F.A.	F.A.	F.A.	F.A.	F.A.	F.A.
Local/Remote	F.A.	F.A.	F.A.	F.A.	F.A.	F.A.

Legenda:

F.A.	= Full Access.
F.A*	= Full Access that may begun a partial access according to Reactor Configuration and to recipes' lockers.
P.A	= Partial Access .Not all functions in the relevant menu are available.
N.A	= No Access.
	= Menu.
	= Commands button.
	= Sub Menu.

13.3 None Logged

As soon as that GUI has been started, to gives commands to the reactor it is necessary that a user is logged IN.
If any user is logged it is not possible gives any commands to the reactor, it is only possible monitor the reactor status.
Once no user is logged the main window appears as follow.
Alarms ,**Views** and **Help** menu and **BlackBox**, **Log-In** ,**Log-Out** and **LOCAL** buttons are available.

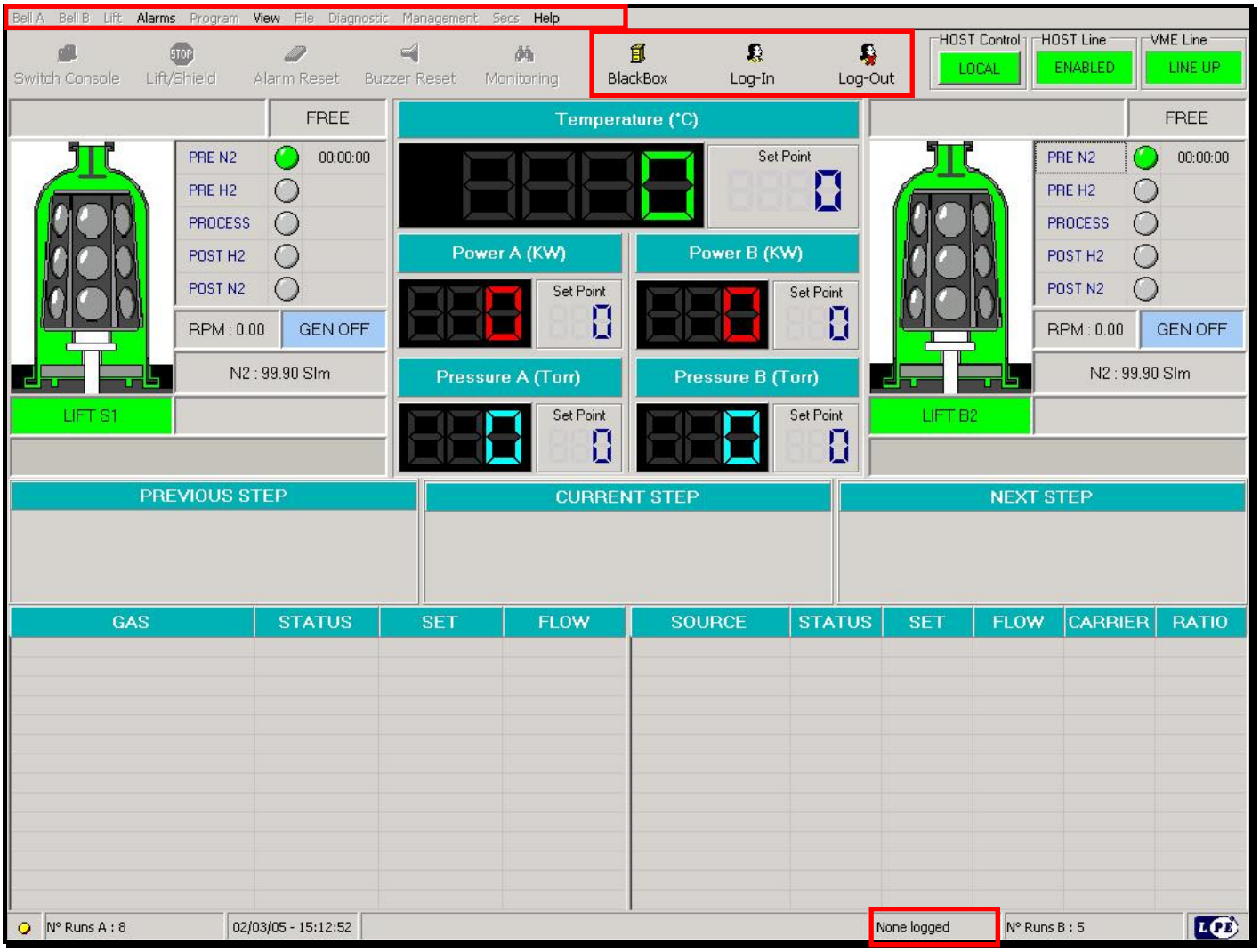

13.4 Log-In

When User Log-In button has been pressed, the Password Dialog window appears.

It is necessary enter the user name and password to log-in and then press OK. Write here the user-id, or select it by pull-down menu. If in pull-down menu your User-ID doesn't appear write it with keyboard.

By pressing the ***Security*** button it is possible view the Security window that summarizes the user Access Level.

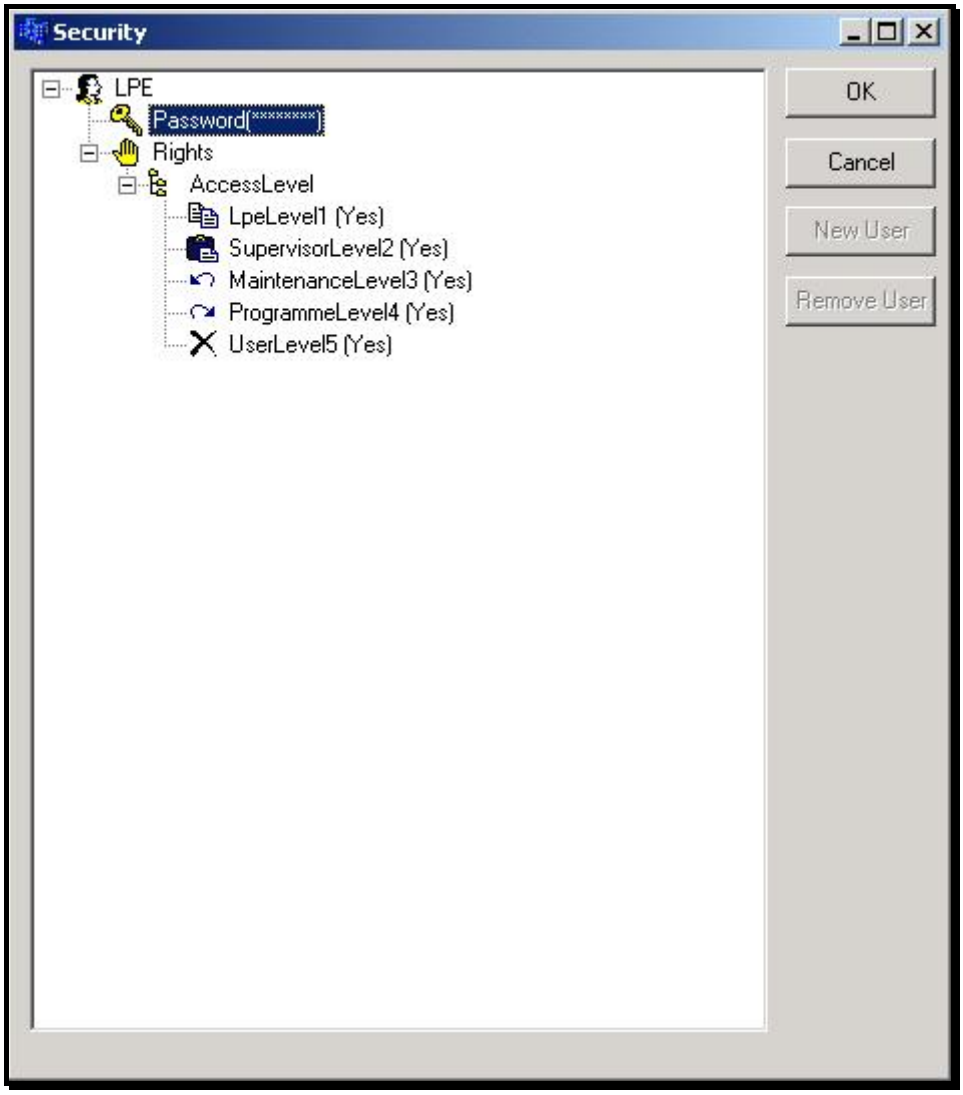

By clicking two times on *Password (*********)* it is possible modify the user password by means of the Change Password widow.

Current Password: type current password to be allowed to change it.
New Password: type new password

Retype New Password: confirm of new password to avoid mistyping error

Note:

Pay attention to capital letters either for *User Name* either for *User Password*: 'LPE' is different from 'lpe'.

Once a user is Logged in, menus and buttons are available to the main GUI page and from that moment all Commands, Events, Alarms will be recorded from the Black Box under his responsibility.

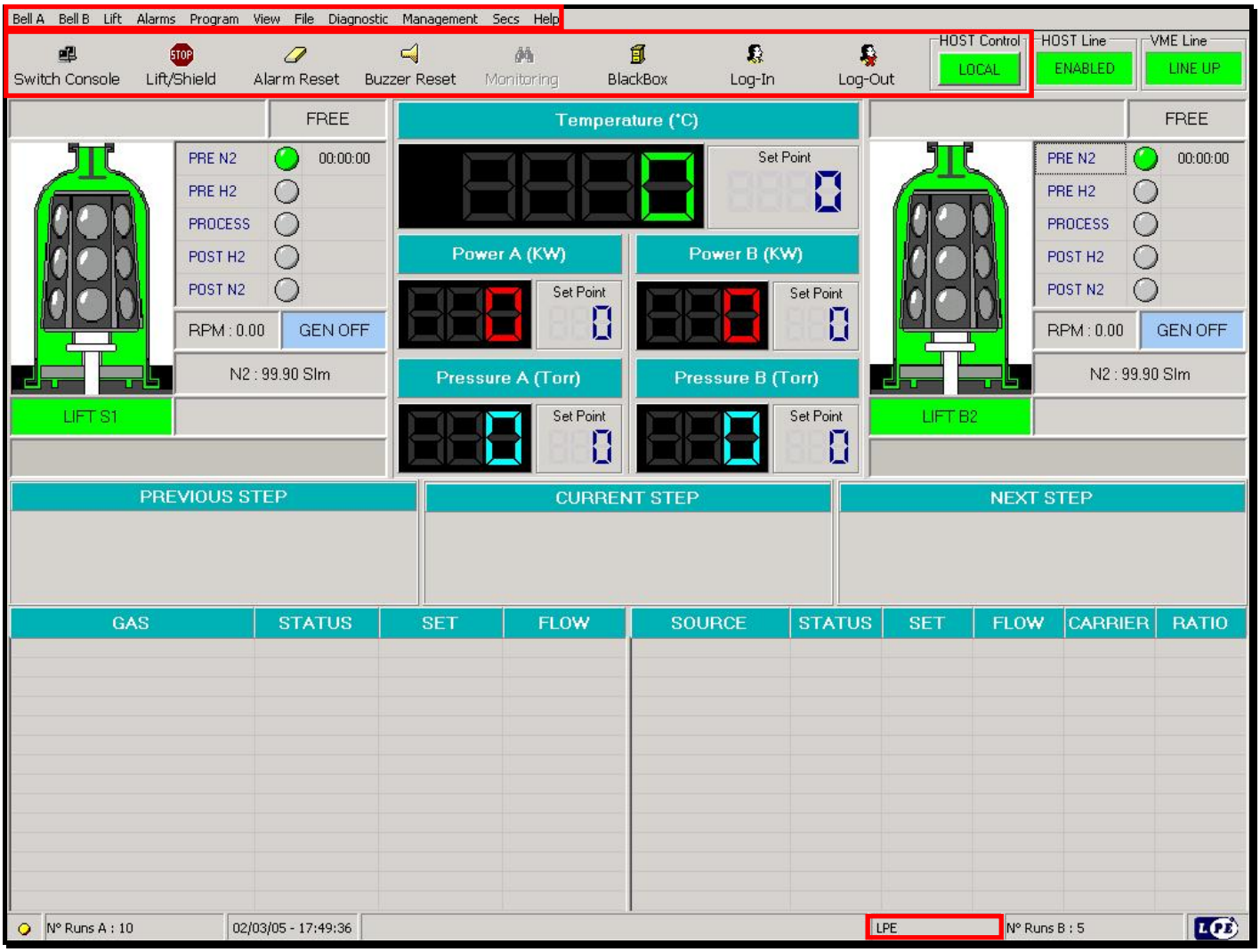

Note:

Once that user made log-in, no other password will be required anymore, within user's possibilities. If user tries to gain access to a forbidden area a denying message will appear.

An automatic Log-OUT is activated if for more than 30 minutes that a user is logged IN, no any command is given to the GUI.

13.5 Log-out

It is strongly recommended if the user actually logged needs to leaves the reactor unattended, to Log out from the GUI by pressing the Log-Out Button.

After a Log-out the GUI pass to the NONE LOGGED access level unless anew user log- in.

13.6 Creates a new user and modify the access level

Only PE2061 or PE2061S reactor responsible can creates a new user and modify the access level.

By Pressing the security Button it is possible to edit any settings of any users.

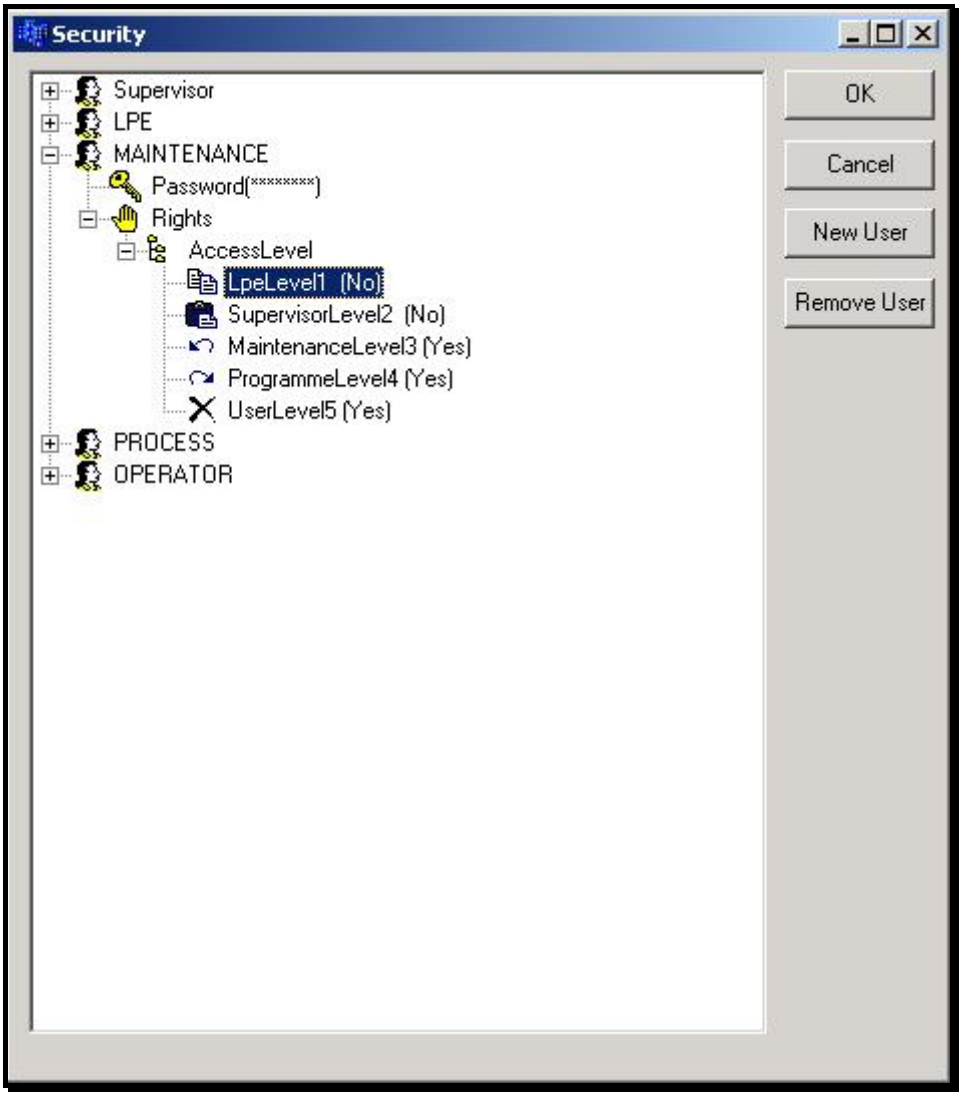

- **Creates a new user**
  By pressing *New User* button, it appears the *New User* window where is possible set the user name

- **Enter new User Password**

  By clicking on the *'+'* on the left of any name it is possible see the user's password.

  Click two times on *Password (*********)* to enter the new user password by means of the *Change Password* widow.

Current Password: Type current password to be allowed to change it. The first time it is not necessary enter the *Current password*.
From the second time viceversa it will be necessary enter the *Current password* before to have the possibility to change the user password.
New Password: type new password.
Retype New Password: confirmation of new password to avoid mistyping error.

NOTE:
Pay attention to capital letters either for *User Name* either for *User Password*: 'LPE' is different from 'lpe'.

- **Modify the User Access level**
  By clicking on the *'+'* on the left of any name it is possible see the user's Access Level list.
  By clicking two times on each level, it is possible assign it or not to the user.

NOTE:
It is important assign the right access level according to the type of training that the user has received and to the type of job that the user is going to perform on the reactor.
To assign the correct access level sees the Access level Table.
A wrong assignment of the Access level may result dangerous for the user and for the reactor.

The access level is of pyramidal type and for this reason a user that should access to certain level ,must be enabled to access to the levels below .

for Example: to set the access level for a maintenance engineer, is necessary assigns other than the *MaintenanceLevel3* *the two access levels below* *ProgrammeLevel4* *and* *Userlevel5*

- **Remove a User**
  By pressing the *Remove User* button it is possible remove the selected user.

14 Reference on screen messages list and description

All alarm messages referred to malfunctions are described below.
Malfunctions cause the automatic actions corresponding to the letters in brackets (See ACTION AFTER AN ALARM in chapter "View Recorded Alarms" for actions' description).
Below "BEFORE CALLING THE MAINTENANCE" there are hints about the controls to be performed without any special tools and without the reactor manual, before calling the maintenance service.

Types of actions after an alarm:
"W" TYPE (**W**ARNING)
"H" TYPE (**H**YDROGEN COOL DOWN)
"N" TYPE (**N**ITROGEN)

Letter "**D**" will indicate delayed safeties.

Safeties that do not affect cycle start, even if present, will be indicated by letter **"A"**.

In the next pages, all possible messages are listed in alphabetical order on the "Alarm Text", each with its own description.

Al. ID	Alarm Text	Alarm type actions	Action after alarm
87	232 TO GENERATOR ERROR	TYPE **"H"**	Shows that the serial link RS232 connecting the PE2061 reactor to power generator is interrupted or does not work properly. **Before calling the maintenance:** If, for any reasons, communications between reactor and power generator have been interrupted, perform the following procedure to avoid communications problem: Case (a) - reactor off / generator on (1) Switch reactor on Case (b) - reactor on / generator off (1) Switch generator on Case (c) - reactor on / generator on (1) Reset the computer (press RESET button on TVM 220 or TVM231card). Case (d) - reactor off / generator off (1) Switch generator on (2) Switch reactor on See also chapter "Reactor start-up"
145	ADJUST LIFT POT. BELL A	Type **"W"**	The potentiometer reading is higher than 1.5 Vdc when the shutter plate is closed.
146	ADJUST LIFT POT. BELL B	Type **"W"**	See ADJUST LIFT POT. BELL A
45	AIR FLOW SENSOR	Type **"H"**	The main blower for the bell-jar air cooling is not ON, or the air flow is below the value detected from the "air flow sensor" (2 /3 mBar)

Al. ID	Alarm Text	Alarm type actions	Action after alarm
			Before calling the maintenance: • Check whether the main blower is ON (see the magneto thermic switch QM126D on the electric panel at the rear of the reactor). If the main blower is OFF also the "blower motor thermal sw" alarm will be activated. • Check the pressure value on the pressure switch (Q –26) situated on the top of the water circuit in the reactor left side.
122	BELL A OVER TEMP	Type **"H"**	During process and while generator is ON, the pyrometer on bell A has read a temperature over 1250 for more than a fixed timeout (12 sec.)
124	BELL A TEMP TROUBLE	Type **"H"**	This alarm arises during process. The conditions are the following • Temperature greater than 900°C. • Temperature stable, not in ramp. • Real temperature differ +/- 10°C from the set point for more than 60 sec.
123	BELL B OVER TEMP	Type **"H"**	During process and while generator is ON, the pyrometer on bell A has read a temperature over the "Management → Reactor Configuration → MFC Range → **Max Temperature** parameter" for more than a fixed timeout (12 sec). In any case for safety the "Max Temperature" parameter cannot be greater than 1260°C
125	BELL B TEMP TROUBLE	Type **"H"**	This alarm arises during process. The conditions are the following • Temperature greater than 900°C. • Temperature stable, not in ramp. Real temperature differ +/- 10°C from the set point for more than 60 sec.
29	BLOWER MOTOR THERMAL SW	Type **"H"**	Action of the magneto thermic switch (QM126D), which protect the main blower motor (Q-4). It can be a result of a motor over heating or relevant wiring fault. **Before calling the maintenance:** Check whether the main blower is ON (see the magneto thermic switch (QM126D), on the electric panel at the rear of the reactor). If the main blower is OFF also the "blower motor thermal sw" alarm will be activated

Al. ID	Alarm Text	Alarm type actions	Action after alarm
44	BUBBLER 1/2/3 ALARM	Type **"H"**	Liquid silicon level in bubbler 1 or 2 or 3 has reached a dangerous level. The bubbler has two level sensors. This alarm means that silicon has reached the level of the second sensor. There might be a fault in the first level sensor. Should the silicon level increase again, the liquid could enter the gas pipes causing obvious troubles. Action of this safety switches off the electric valve that enables the bubbler filling. In any case, because the fault could be on the electric valve, IT IS NECESSARY to IMMEDIATELY close the manual valve between the main silicon tank and the bubbler. **Before calling the maintenance:** • The bubbler must be purged to decrease the silicon level The problem must be solved before restarting the reactor
85	BUBBLER 1 EMPTY	TYPE **"H"**	Epi run can't start because the silicon level in the bubbler is below the first level sensor. This message is preceded by a "BUBBLER 1 (2) REFILLING TROUBLE" message (see) and it can appear because: • There was not enough time to fill the bubbler • The main silicon tank is empty • The pneumatic valve enabling filling is not activated or does not work
51	BUBBLER 1	TYPE "**H**"	Liquid silicon level in bubbler 1 or 2 has reached the minimum level. The bubbler is automatically refilled in 1 minute.
86	BUBBLER 2 EMPTY	TYPE **"W"**	See BUBBLER 1 EMPTY
52	BUBBLER 2	TYPE **"H"**	See BUBBLER 1
56	BUBBLER 3 LEVEL	TYPE **"H"**	See BUBBLER 1
116	BUBBLER REFILL	TYPE **"H"**	The time allowed to refill the bubbler is limited to 3 minute. If silicon level has not reached proper level within one minute, filling is stopped and this message is displayed. **Before calling the maintenance check whether:** • The main silicon tank is empty • The pneumatic valve enabling (EVBL1 and EVBL2) filling is not activated or does not work Pressing RESET in the ALARM menu can restart filling. Before this operation, make sure that no inconveniences can be caused.
23	CLAMPS A OPEN		See LIFT A (B) TROUBLE
63	ICLAMP B OPEN		See LIFT A (B) TROUBLE
57	COMP.AIR VACUUM VALVES	TYPE **"N"**	Only for Low Pressure System. Low compressed air supply to the low pressure system

Al. ID	Alarm Text	Alarm type actions	Action after alarm
			Before calling the maintenance: • Check if compressed air is supplied with at list 5- 6 Bar pressure.
98	CONFIG.LPE DESTROYED	TYPE **"H"**	CONFIG.LPE does not exist on VME controller. It is necessary to -send the CONFIG.LPE file again from the Operator workstation. One of the ways to update the CONFIG.LPE file is to switch the reactor off or to perform hardware reset on the VME cards, in order to interrupt the communication with the Operator Interface (a "LINE DOWN" message will appear on the main screen). At startup of communication, the Operator Interface will send the CONFIG.LPE file to VME (a "CONFIGURING" message will appear on the main screen).
113	DOPE1 PRESSURE	TYPE **"W"**	Dope 1 line pressure is too low and triggers the pressure transducer alarm value. **Before calling the maintenance:** • Check real pressure value • Check alarm set point of dope 1 on the: Management→ Reactor configuration→ Gas inlet pressure, window.
114	DOPE2 PRESSURE	TYPE **"W"**	See DOPE 1 PRESSURE
115	DOPE3 PRESSURE	TYPE **"W"**	See DOPE 1 PRESSURE
17	EMERGENCY WATER	TYPE **"H"**	Activation feedback signal from the emergency water box. When present this alarm, means that the emergency water circuit is in function. The "Emergency water circuit" has been activated only if the reactor is in process and there is a leak of cooling water. More in particular, the "Emergency water circuit" has been activated, if for more than 5 seconds: • One or both "emergency water thermal switch" (Q-49) are activated (real temperature above 40°C). • The emergency water pressure switch (T-PCW) detect that water cooling pressure is below 1.5 bar. The "Emergency water circuit" has not been activated if: • Reactor is in process (one or both "emergency water thermal switch" (Q-49) are activated [real temperature above 40°C]), but the emergency water pressure switch (T –PCW) don't detect any leak of cooling water (water pressure above 1 bar). • Reactor is not in process (both "emergency

Al. ID	Alarm Text	Alarm type actions	Action after alarm
			water thermal switch" (Q-49) aren't activated [real temperature below 40°C]) and the emergency water pressure switch (T –PCW) detects a leak of cooling water (water pressure below 1.5 bar). Please note that this alarm is available only if is available the "Emergency water kit". **Before calling the maintenance check:** • Check whether cooling water is supplied to reactor.
32	EXHAUST AIR SW	TYPE **"W"**	Exhaust suction blower (Customer's facilities) is OFF or not properly working.
66	FC1 TROUBLE	TYPE **"H-D-A"**	H2 Main real gas flow, has been differing from its relevant set point, more than the "mass flow controllers allowed error" longer than the "mass flow controllers time out". The "mass flow controllers allowed error" and the "mass flow controllers time out" are both settled in the: Management→ Reactor Configuration → Parameter window. **Before calling the maintenance check:** • Whether gas line is open • Operating pressures • Electrical connections to the relevant mass flow controller
73	FC51 TROUBLE	TYPE **"H-D-A"**	Similar to FC1 TROUBLE (see)
76	FC52 TROUBLE	TYPE **"H-D-A"**	Similar to FC1 TROUBLE (see)
70	FC53 TROUBLE	TYPE **"H-D-A"**	Similar to FC1 TROUBLE (see)
74	FC61 TROUBLE	TYPE **"H-D-A"**	Similar to FC1 TROUBLE (see)
77	FC62 TROUBLE	TYPE **"H-D-A"**	Similar to FC1 TROUBLE (see)
71	FC63 TROUBLE	TYPE **"H-D-A"**	Similar to FC1 TROUBLE (see)
75	FC71 TROUBLE	TYPE **"H-D-A"**	Similar to FC1 TROUBLE (see)
78	FC72 TROUBLE	TYPE **"H-D-A"**	Similar to FC1 TROUBLE (see)
71	FC73 TROUBLE	TYPE **"H-D-A"**	Similar to FC1 TROUBLE (see)

Al. ID	Alarm Text	Alarm type actions	Action after alarm
79	FC8 TROUBLE	TYPE **"H-D-A"**	Similar to FC1 TROUBLE (see). It's referred to HCl line (FC80)
65	FLOWCONTROLLER WARNING	TYPE **"W-D-A"**	For example "FC1 TROUBLE", displayed in yellow. Real gas flow, has been differing from its relevant set point more than the "mass flow controllers allowed error" longer than <u>half</u> of the "mass flow controllers time out". If this warning persists for all the "mass flow controllers time out" it become a type "H" alarm. See FC1 TROUBLE The "mass flow controllers allowed error" and the "mass flow controllers time out" are both settled in the: Management→ Reactor Configuration → Parameter, window. **Before calling the maintenance check:** • Whether gas line is open • Operating pressures • Connections to mass flow controller
12	FLOW SW BELLS CAP A/B	TYPE **"H-D"**	Water flow cooling bell jar cap A or B below 4 Slm. This alarm is delayed, from the "flow & thermal switch delay" parameter. The "flow & thermal switch delay" parameter is settled in the: Management→ Reactor configuration → Parameters, window. **Before calling the maintenance:** • Check whether cooling water is supplied to reactor.
14	FLOW SW CAPACITORS	TYPE **"H-D"**	Water flow cooling capacitors and profiling coil is below than 4 Slm. This alarm has been delayed, from the "flow & thermal switch delay" parameter. The "flow & thermal switch delay" parameter is settled in the: Management→ Reactor configuration → Parameters, window. **Before calling the maintenance:** • Check whether cooling water is supplied to reactor.
6	FLOW SW COIL A	TYPE **"H-D"**	Water flow cooling induction coil A (B) below 19 Slm. This alarm has been delayed, from the "flow & thermal switch delay" parameter. The "flow & thermal switch delay" parameter is settled in the: Management→ Reactor configuration →

Al. ID	Alarm Text	Alarm type actions	Action after alarm
			Parameters, window. **Before calling the maintenance:** • Check whether cooling water is supplied to reactor.
10	FLOW SW COIL B	TYPE **"H-D"**	See FLOW SW COIL A
4	FLOW SW PLATE A	TYPE **"H-D"**	Water flow cooling shutter plate and bell jar cap A below 4 Slm. This alarm has been delayed, from the "flow & thermal switch delay" parameter. The "flow & thermal switch delay" parameter is settled in the: Management→ Reactor configuration → Parameters, window. **Before calling the maintenance:** • Check whether cooling water is supplied to reactor.
8	FLOW SW PLATE B	TYPE **"H-D"**	See FLOW SW PLATE A
53	FRONT SHIELD CLOSED		Micro switch checking whether front shield is closed. Until the shield is not closed, the lift movement is disabled.
28	GAS PANEL LEAK ALARM	TYPE **"N"**	H2 Leak in gas panel cabinet. Explosions are possible when hydrogen-air ratio is 4%. (4 H2 parts - 96 air parts). This value is the "low explosion limit". The H2 leak detector gives an alarm at the 30 % of the LEL **Before calling the maintenance:** • Check clean room / gray area sensor status.
27	GAS PANEL LEAK WARNING	TYPE **"W"**	H2 Leak in gas panel cabinet. Explosions are possible when hydrogen-air ratio is 4%. (4 H2 parts-96 air parts). This value is the "low explosion limit". The H2 leak detector gives a warning at the 15 % of the LEL Although leakage is not dangerous, it is necessary to oversee the sensor gauge in order to verify if leakage increases. **Before calling the maintenance:** • Check clean room / gray area sensor status.
160	GEN EEPROM KO	TYPE **"H"**	reported by 450.D3 board. A threshold of 100,000 writings was exceeded on EEPROM **NOTE: this description is valid only for PE2061S**
161	GEN EEPROM ERROR	TYPE **"H"**	Reported by 450.D3 board. No voltage on board or EEPROM damaged **NOTE: this description is valid only for PE2061S**

Al. ID	Alarm Text	Alarm type actions	Action after alarm
162	GEN RAM CMOS KO	TYPE **"H"**	Reported by 450.D3 board. Damaged RAM and/or 450.D3 board **NOTE: this description is valid only for PE2061S**
163	GEN LOW LINE VOLTAGE	TYPE **"H"**	The three voltages on EAFU12 fuse ends are below set threshold. **NOTE: this description is valid only for PE2061S**
164	GEN HIGH LINE VOLTAGE	TYPE **"H"**	The three voltages on EA-FU12 fuse ends are above set threshold **NOTE: this description is valid only for PE2061S**
167	GEN MF OVERVOLTAGE	TYPE **"H"**	Voltage on inductor ends is too high: S_29 value read on page 12 in OP differs from value indicated in GENERATOR SET-UP **NOTE: this description is valid only for PE2061S**
168	GEN CC OVERVOLTAGE	TYPE **"H"**	Voltage on inverter ends is too high: S_58 value read on page 15 in OP differs from value indicated in GENERATOR SET-UP **NOTE: this description is valid only for PE2061S**
169	GEN BAR VOLTAGE KO	TYPE **"H"**	Converter gave no run signal: R_31 value read on page 7 in OP is 7 and KI voltage over ground is 0 **NOTE: this description is valid only for PE2061S**
170	GEN EMERG PUSH-BUTTON	TYPE **"H"**	Due to pressing of emergency button, Z4 input of 450.D3 board was set to 0V **NOTE: this description is valid only for PE2061S**
172	GEN IGBT PROTECTION	TYPE **"H"**	SD Led on RA0.2B board lit and voltage on terminal 27 on 450.D3 board is 0V **NOTE: this description is valid only for PE2061S**
173	GEN INV THERM.PROT	TYPE **"H"**	SE Led on RA0.2B board lit and voltage on Z8 terminal on 450.D3 board is 0V **NOTE: this description is valid only for PE2061S**
174	GEN INVERTER OVERC	TYPE **"H"**	SF Led on RA0.2B board lit and voltage on Z9 terminal on 450.D3 board is 0V **NOTE: this description is valid only for PE2061S**

Al. ID	Alarm Text	Alarm type actions	Action after alarm
175	GEN INV.FANS THERM.SW	TYPE **"H"**	Abnormal input downstream from EA-CM01 magneto thermic switch **NOTE: this description is valid only for PE2061S**
176	GEN IND.THERM.PROT	TYPE **"H"**	Water temperature on cooling circuit outlet exceeds 50°C **NOTE: this description is valid only for PE2061S**
177	GEN WATER FLOW SW	TYPE **"H"**	Water pressure on flow switch is lower than 0.3 Mpa **NOTE: this description is valid only for PE2061S**
178	GEN CABINET FAN TH.SW	TYPE **"H"**	Temperature inside cabinet exceeds 40°C. **NOTE: this description is valid only for PE2061S**
179	GEN EARTH LOSS INSULAT	TYPE **"H"**	NA-P07 relay has detected a transient loss to RMT/8 earth **NOTE: this description is valid only for PE2061S**
180	GEN CABINET FAN TH.SW	TYPE **"H"**	NA-P07 relay has detected a transient loss to RMT/8 earth **NOTE: this description is valid only for PE2061S**
184	GEN AC/DC CONV.OVERC	TYPE **"H"**	Reported by 505.H1 board. Instantaneous current value exceeded twice the rated voltage value **NOTE: this description is valid only for PE2061S**
185	GEN AC/DC CONV.OVERL	TYPE **"H"**	Reported by 505.H1 board. **NOTE: this description is valid only for PE2061S**
186	GEN THERMAL PROT	TYPE **"H"**	Thermostat reported temperature threshold in AC/DC converter exceeded **NOTE: this description is valid only for PE2061S**
189	GEN PHASES LOSS/MINVO	TYPE **"H"**	Check made only when generator is not idle **NOTE: this description is valid only for PE2061S**
190	GEN W.D.TX FROM MUX	TYPE **"H"**	Failing connection on RS485 between 505.H1 board (converter) and 450.D3 board (inverter) **NOTE: this description is valid only for PE2061S**
191	GEN W.D.TX FROM 452L	TYPE **"H"**	Failing connection on RS232 between 452.L board (display) and 450.D3 board (inverter) **NOTE: this description is valid only for PE2061S**

Al. ID	Alarm Text	Alarm type actions	Action after alarm
95	GENERATOR OFF	TYPE **"H"**	Power generator did not start. Reactor's control unit receives zero power. **Before calling the maintenance:** • Check whether power generator is ON (Main switch ON) • Check whether power generator is in AUTOMATIC MODE.
93	GENERATOR TROUBLE	TYPE **"H"**	Control unit receives a fault message from power generator and interrupts running process. More information about the fault is displayed on power generator LCD.
120	H2_LACK	TYPE "**W**"	Hydrogen flow in PRE or POST H2 is lower than 50% of flow set in: Management → Reactor Configuration → Purge Parameters. After 30 seconds of insufficient flow, the message is displayed, but no action is taken. **Before calling the maintenance**: • Check whether H2 line is ON
121	H2_LACK	TYPE "**H**"	Hydrogen flow in PRE or POST H2 is lower than 50% of flow set in: Management → Reactor Configuration → Purge Parameters. After 60 seconds (30 seconds after the corresponding warning, see above), the following take place: *CURR. STATUS* *NEXT STATUS* *COMMENTS* PRE H2 PRE N2 POST H2 POST H2 **Before calling the maintenance**: • Check whether H2 line is ON
112	HCI PRESSURE	TYPE **"W"**	HCL line pressure is too low and triggers the pressure transducer alarm value. **Before calling the maintenance:** • Check real pressure value • Check alarm set point of dope 1 on the: Management→ Reactor configuration→ Gas inlet pressure window.
130	HCL FAST TROUBLE	TYPE **"H-D-A"**	Similar to FC1 TROUBLE (see). Only active in case it's available HCl Fast
97	JUMP STEP	Command	This command is available only when a bell-jar is in process. Select this command to stop current step and immediately jump to next step.
30	LAMINAR FLOW	TYPE **"W"**	Loading area laminar flow motor is OFF, or the airflow is below the value detected from the "laminar flow pressure switch" (1 mBar).

Al. ID	Alarm Text	Alarm type actions	Action after alarm
			Before calling the maintenance: • Check whether the laminar flow motor is ON (see the magnetothermic switch Z-9 on the electric panel at the rear of the reactor) • Check if the laminar flow velocity regulator (A-25) placed in the B lift area is properly adjusted. • Check the pressure value on the pressure switch (Q –28) situated on the top of the water circuit in the reactor left side.
40	LEAK SENSORS FAULT	TYPE **"W-D"**	It shows it there is a fault in gas panel cabinet H2 leak sensor or in reactor frame H2 leak sensor **Before calling the maintenance:** • Open computer port • Check which detector shows the fault message or whether the fault led is triggered • For any fault messages referred to the troubleshooting chapter
80	LIFT A TROUBLE	TYPE **"N"**	This alarm can be given by a fault occurred when: • Opening shutter plate • Closing shutter plate • Moving shutter plate • Unknown position of lift during process Each station has a two-clamp closing system in order to ensure perfect closing. Clamps close when the upper proximity switch detects the lift. Clamps opening command is given right after pressing the "down "option in the lift menu. A proximity switch and a micro switch are mounted on both clamps in order to detect open and close positions. **LIFTS OPERATION** **Opening:** before moving the lifts, the control unit performs some checks: #1 Opening consent check (given by the completion of purge procedures). #2 Compressed air check. #3 The control unit opens the clamps and waits until clamps are completely open before lowering the lift. #4 While the "down" command is being given, the control unit checks if the lift is really moving by reading voltage on the potentiometer mounted on lift motor. In process mode, the stop point is the load/unload level selected in CONFIGURATION MENU.

Al. ID	Alarm Text	Alarm type actions	Action after alarm
			In Maintenance mode, the stop point is the lower proximity switch. **Closing:** the clamps must be completely open to allow the lift movement. The control unit checks if the lift is really moving by reading the voltage on the potentiometer mounted on the lift motor. When the lift reaches its upper position, a proximity switch closes the clamps. **Moving:** - Troubles when opening the bell-jar If one of the two clamps does not open within 5 seconds, one of the following messages will appear on the bottom field of the GUI: "LIMIT SW CLAMP A/B CLOSED (INT)" "LIMIT SW CLAMP A/B CLOSED (EXT)" **OTHERS** Compressed air lack: "PRESS SW COMP.AIR" message will appear and the lift will not move. During process If the computer detects that one or both clamps are neither closed nor open (this could be due to a fault in the proximity switches or to a fault in the micro switches or to a clamp fault), after a while LIFT A/B TROUBLE message will appear. The process is aborted and the reaction chamber changes status to nitrogen purge. **Before calling the maintenance check if:** • Compressed air is ON • Compressed air pressure measured on the relevant pressure gauge in gas panel is 6 bar approx. • Compressed air pressure measured on clamps pressure gauges in the lift area is between 1,5 and 2 bar (not exceeding 2 bar)
81	LIFT B TROUBLE	TYPE **"N"**	See LIFT A TROUBLE
22	LIMIT SW CLAMP A CLOSED-EXT		See LIFT A (B) TROUBLE
21	LIMIT SW CLAMP A CLOSED-INT		See LIFT A (B) TROUBLE
62	LIMIT SW CLAMP B CLOSED-EXT		See LIFT A (B) TROUBLE
61	LIMIT SW CLAMP B CLOSED-INT		See LIFT A (B) TROUBLE

Al. ID	Alarm Text	Alarm type actions	Action after alarm
20	LIMIT SW LIFT DOWN A		The lift reached its lower position (Bell jar open)
60	LIMIT SW LIFT DOWN B		The lift reached its lower position (Bell jar open)
19	LIMIT SW LIFT UP A		The lift reached its upper position (Bell jar close)
59	LIMIT SW LIFT UP B		The lift reached its upper position (Bell jar close)
126	LOW PRESS TROUBLE	TYPE **"H"**	The alarm aborts the process of the chamber in Wait Status, if the automatic hold last more than one minute.
132 & 134	LOW PRESS CHECK FAILED	TYPE **"H"**	The result of low pressure test is that it has not been possible to grant a stable low pressure value in one bell jar
131 & 133	LOW PRESS NOT REACH	TYPE **"H"**	The result of low pressure test is that it has not been possible to reach the pressure set point value in one belljar
137	MAX POWER	TYPE **"H-D"**	This alarm is released if the power given from generator is ≥ of the Management→ Reactor Configuration→ Max Power parameter for more than 20 sec.
54	N2 VACUUM PUMP	TYPE **"H"**	Only for Reduced Pressure System. N2 purge lack in the vacuum pump
118	N2_LACK	TYPE "**W**"	Nitrogen flow in PRE or POST N2 is lower than 50% of flow set in: Management → Reactor Configuration → Purge Parameters. After 30 seconds of insufficient flow, the message is displayed, but no action is taken. **Before calling the maintenance**: • Check whether N2 line is ON
119	N2_LACK	TYPE "**H**"	Nitrogen flow in PRE or POST N2 is lower than 50% of flow set in: Management → Reactor Configuration → Purge Parameters. This alarm arises after 60 seconds (30 seconds after the corresponding warning, see above), **Before calling the maintenance**: • Check whether N2 line is ON
100	O_RING A LEAK	TYPE **"H"**	It shows that either the shutter plates O-rings or bell-jars cap O-rings are leaking. The selected process will not start. The test is carried on when the bell-jar is in PRE-H2 purge status. If the test fails the bell-jar goes back to PRE-N2 purge status. **Before calling the maintenance:** • Check if O-rings in shutter plates and in the bell-jar cap are correctly positioned • Check if there are wastes (pieces of wafers or similar objects) on the O-rings

Al. ID	Alarm Text	Alarm type actions	Action after alarm
101	O_RING B LEAK	TYPE **"H"**	See O RING A LEAK
24	PEDAL A		Input connected to the pedal for the rotation of the A station susceptor. If the bell-jar is open, susceptor rotation starts at 4 rpm.
64	PEDAL B		See PEDAL A
90	PHOTOCELL A TROUBLE	TYPE **"H-D"**	The rotation unit has a photocell that checks speed and position of motor. If the computer does not detect the photocell beam for N consecutive seconds, alarm occurs. **Before calling the maintenance:** • Reset rotation motors by selecting Diagnostic → Rotation test and try to operate motor.
92	PHOTOCELL B TROUBLE	TYPE **"H -D"**	See PHOTOCELL A TROUBLE
31	POWER FAIL	TYPE **"H"**	This safety is only used when the control unit gets the power supply from a UPS unit that detects power fail
128	POWER LIMIT	TYPE **"W"**	Given when P_{act} > 80 KW and T_{act} < 800 °C Where: T_{act} = actual temperature P_{act} = actual power
98	POWER/TEMP	TYPE **"H"**	PE2061 computer has a Power/Temperature conversion table from 800 to 1250 °C in memory. For each temperature there is a relevant correct power value. A conflict between read temperature and power supplied by power generator causes this alarm. It usually happens when the optical pyrometer, due to abnormal silicon deposition on bell jar, does not read the temperature properly. No actions are taken, but power supplied will be limited to the theoretical value for the relevant temperature. **Before calling the maintenance:** • Check bell jar conditions. • Check whether the optical pyrometer is properly mounted and connected.
2	PRESS BELL A ALARM	TYPE **"N"**	Shows that pressure value inside the bell-jar detected from the "press bell A (B) alarm pressure switch" is more than 15 mBar. Please note that unlike from the other N type alarm the press bell A (B) alarm will close all gases (also nitrogen) until pressure in bell-jar goes down to normal value. **Before calling the maintenance:** • Check whether the scrubber is ON and in good conditions. • Check exhaust pipe conditions
1	PRESS BELL A WARNING	TYPE **"W"**	Shows that pressure inside bell jar detected from the "press bell A warning" pressure switch has reached

Al. ID	Alarm Text	Alarm type actions	Action after alarm
			an abnormal value (more than 5 mBar) and if pressure keeps increasing this might cause the PRESS BELL A (B) ALARM (see). **Before calling the maintenance:** • Check whether scrubber is ON and in good conditions. • Check Exhaust pipe conditions
42	PRESS BELL B ALARM	TYPE **"N"**	See PRESS BELL A ALARM
41	PRESS BELL B WARNING	TYPE **"W"**	See PRESS BELL A WARNING
43	PRESS SW COMP.AIR	TYPE **"H"**	The compressed air to the reactor is closed or below the value read from the pressure switch placed in the gas panel (6 Bar) **Before calling the maintenance:** • Check if compressed air is supplied with a 6 Bar pressure.
38	BUBBLER T.C. OUT OF RANGE	TYPE **"W"**	Signal coming from the LPE bubbler thermal controller that has detect a difference between the temperature set point and the real one. **Before calling the maintenance:** • Check if the thermal regulator is On • Check if the thermal controller cooling water is ON
37	PRESSURE SW SPOILER	TYPE **"H"**	The "Spoiler Pressure switch" detecting spoiler position is triggered. **Before calling the maintenance:** • Check whether the main blower is ON (see the magneto thermic switch (QM126D), on the electric panel at the rear of the reactor). If the main blower is OFF also the "blower motor thermal sw" alarm will be activated. • Check the pressure value on the pressure switch (Q –29) situated on the top of the water circuit in the reactor left side. • Check if spoiler changes the position correctly by using the apposite diagnostic menu: Diagnostic → Spoiler test
96	PROCESS ABORT	Command	This command is available only when a bell-jar is in PROCESS. Select this command to stop a running process (H2 post purge). Execution of an ABORT command is stored in the BLACK BOX.
107	PROCESS HOLD	Command	The ADJUST PROCESS RUNNING command is available only if the process running is in HOLD status.
82	PYROMETER A TROUBLE	TYPE **"H"**	Power generator has been supplying a quantity of power necessary to heat up the susceptor ,but the optical pyrometer does not detect any temperature. **Before calling the maintenance:**

Al. ID	Alarm Text	Alarm type actions	Action after alarm
			• Check bell jar conditions. • Check whether the optical pyrometer is properly mounted and connected Make sure to not have used a gasses purge recipe with power on at low value for a long time (this condition may triggers the alarm).
83	PYROMETER B TROUBLE	TYPE **"H"**	See PYROMETER A TROUBLE
26	REACTOR LEAK ALARM	TYPE **"N"**	H2 Leak in reactor top frame. Explosions are possible when hydrogen-air ratio is 4%. (4 H2 parts - 96 air parts). This value is the "low explosion limit" The H2 leak detector gives an alarm at the 20 % of the LEL **Before calling the maintenance:** • Check clean room / gray area sensor status
25	REACTOR LEAK WARNING	TYPE **"W"**	H2 Leak in reactor top frame. Explosions are possible when hydrogen-air ratio is 4%. (4 H2 parts-96 air parts). This value is the "low explosion limit". The H2 leak detector gives a warning at the 10 % of the LEL. Although leakage is not dangerous, it is necessary to oversee the sensor gauge in order to verify if leakage increases. **Before calling the maintenance:** • Check clean room / gray area sensor status.
89	ROTATION A TROUBLE	TYPE **"H-D"**	The rotation unit has a photocell that checks its correct functioning. At every susceptor turn, the computer checks timing of photocell signal. If the photocell signal comes earlier or later than expected, the safety action begins. **Before calling the maintenance:** • See PHOTOCELL A (B) TROUBLE
91	ROTATION B TROUBLE	TYPE **"H-D"**	See ROTATION A TROUBLE
142	ROT A CPU WATCHDOG	TYPE **"H-D"**	The rotation CPU does not refresh the motor position in the shared memory to the main CPU during the purging phases for more than 1 minute and 30 sec.
143	ROT B CPU WATCHDOG	TYPE **"H-D"**	See "Rotation A CPU watchdog"
138	ROT A TEMP WATCHDOG	TYPE **"H-D"**	The rotation CPU does not refresh the motor position in the shared memory to the main CPU during the process phase for more than 25sec.
139	ROT B TEMP WATCHDOG	TYPE **"H-D"**	See "Rotation A Temp Watchdog CPU watchdog"
18	SAFETY SW RP PORT	TYPE **"W"**	Safety switch that detect if the "Reduced pressure system door" is closed.

Al. ID	Alarm Text	Alarm type actions	Action after alarm
35	SAFETY SW COMPUTER PORT	TYPE **"W"**	The control unit is located in a cooled cabinet. If one or both electronic cabinet doors are open the "safety switch computer port" warning will be displayed. No actions are taken, but no recipe can be run. **Before calling the maintenance:** • Check if one or both electronic cabinet doors are open.
16	SAFETY SW LIFT A PORT	TYPE **"W"**	Safety switch (A-72) that detects if lift port is closed. This safety switch is connected in series with the quartz guard safety photocell (A-74). In PROCESS menu, if lift port is open or the quartz guard shield is outside the loading table, lift movement is inhibited or stopped. **Before calling the maintenance:** • Check if the lift door is open • Check if the quartz saver shield is correctly inside the loading table.
55	SAFETY SW LIFT B PORT	TYPE **"W"**	See SAFETY SW LIFT A PORT
47	SAFETY SW PORT A	TYPE **"N"**	Switch that detects the safety panels at the rear and at left side of PE2061 reactor. **Before calling the maintenance:** • Check if all the rear panels are correctly screwed on frame
48	SAFETY SW PORT B	TYPE **"N"**	Switches that detect the safety panels at the rear, top and right side of PE2061 reactor. **Before calling the maintenance:** • Check if all the rear panels are correctly screwed on frame • Check if the top panel are properly closed
39	SCRUBBER EMISSION	TYPE **"W"**	A sensor that detects Scrubber efficiency.
46	SCRUBBER TROUBLE	TYPE **"N"**	The reactor can monitor the scrubber by connecting the scrubber output signal to the relevant reactor digital input.
129	SILICON DRUM EMPTY	TYPE **"W"**	The silicon weight is under a minimum value. This means that the silicon drum is empty.
49	SPOILER IN A	TYPE **"H"**	Spoiler directs air to B station (the proximity switch is then closed on B side)
50	SPOILER IN B	TYPE **"H"**	See SPOILER IN A
88	SPOILER TROUBLE	TYPE **"H"**	Proximity sensors, those detect the improper spoiler position. See "spoiler in A-B"
67	SX1 TROUBLE	TYPE **"H-D-A"**	Similar to FC1 TROUBLE case (see)
68	SX2 TROUBLE	TYPE **"H-D-A"**	Similar to FC1 TROUBLE case (see)
69	SX3 TROUBLE	TYPE **"H-D-A"**	Similar to FC1 TROUBLE case (see).

Al. ID	Alarm Text	Alarm type actions	Action after alarm
15	THERMAL SW AIR	TYPE **"H-D"**	Shows that temperature of air cooling bell-jars exceeds the value set on thermal switch air. (Q-12). This alarm has been delayed, from the "flow & thermal switch delay" parameter. The "flow & thermal switch delay" parameter is settled in the: Management → Reactor configuration → Parameters, window. **Before calling the maintenance:** • Make sure that the air thermal switch in the reactor (lower frame, small side door, station A side) is set between 35 and 40 degrees.
11	THERMAL SW BELL CAP A/B	TYPE **"H-D"**	It shows that temperature of cooling water concerning bell jar cap A or B is too high (over 60 degrees). This alarm has been delayed, from the "flow & thermal switch delay" parameter. The "flow & thermal switch delay" parameter is settled in the: Management→ Reactor configuration → Parameters, window. **Before calling the maintenance:** • Check whether water inlet pressure is enough (the difference between inlet and outlet pressure should be around 4 Bar)
13	THERMAL SW CAPACITORS	TYPE **"H-D"**	Thermal switch, which shows that temperature of cooling water concerning capacitors of station A and B is too high (over 60 degrees). This alarm has been delayed, from the "flow & thermal switch delay" parameter. The "flow & thermal switch delay" parameter is settled in the: Management → Reactor configuration → Parameters, window. **Before calling the maintenance:** • Check if water inlet pressure is sufficient (the difference between inlet and outlet pressures should be around 4 Bar)
5	THERMAL SW COIL A	TYPE **"H-D"**	Thermal switch, which shows that temperature of cooling water concerning induction coil of station A (B) is too high (over 60 degrees). This alarm has been delayed, from the "flow & thermal switch delay" parameter. The "flow & thermal switch delay" parameter is settled in the: Management → Reactor configuration → Parameters, window.

Al. ID	Alarm Text	Alarm type actions	Action after alarm
			Before calling the maintenance: • Check if water inlet pressure is enough (the difference between inlet and outlet pressure should be around 4 Bar)
9	THERMAL SW COIL B	TYPE **"H-D"**	See THERMAL SW COIL A
33	THERMAL SW COMPUTER AIR	TYPE **"W"**	It shows action of thermal switch of computer cabinet (over 40 degrees). This safety does not stop the running process but prevents new processes from starting. **WARNING !!!** **If the problem lasts for more than 1 minute and both bell-jars are in Nitrogen purge, the reactor will be switched off.** **Before calling the maintenance:** • Check whether blowers of computer cabinet are ON • Check whether the thermal switch is set at 35-40 °C approx.
3	THERMAL SW PLATE A	TYPE **"H-D"**	It shows that temperature of cooling water concerning shutter plate and bell jar cap A is too high (over 60 degrees). This alarm has been delayed, from the "flow & thermal switch delay" parameter. The "flow & thermal switch delay" parameter is settled in the: Management→ Reactor configuration → Parameters, window. **Before calling the maintenance:** • Check whether water inlet pressure is enough (the difference between inlet and outlet pressure should be around 4 Bar)
7	THERMAL SW PLATE B	TYPE **"H-D"**	See THERMAL SW PLATE A
94	TRANSFER TROUBLE	TYPE **"H"**	There has been a problem on switching generator transfer between the two bell-jars.
57	VACUUM PUMP TROUBLE	TYPE **"H"**	Only for Reduced Pressure System. Vacuum pump is faulty
117	WS OFF	TYPE **"H"**	There has been no communication between Sun workstation and VME controller for more than a fixed amount of seconds
144	W1	TYPE **"W"**	The rotation CPU encounters a VME bus error.
108	ZERO POWER	TYPE **"H-D"**	Given when reactor sends the Power ON command and generator does not send any alarm, but power feed back is 0

PE2061 OPERATION MANUAL
QUICK REFERENCE

Revision: 00

ALL RIGHTS RESERVED - LPE S.p.a.

This document is provided with the explicit condition that it must be considered as absolutely reserved and that it must not be reproduced, even partly, neither shown nor revealed to a third party, or however it must not be used in such ways or for purposes different from the ones authorized in writing from the Society.

☐ CONTROLLED Copy n .....
This is a controlled copy, it has been registered and it is subject to the updating service.

☐ NOT CONTROLLED Copy
This is a not controlled copy, it is for information only and it is not subject to upgrading.

00	17/11/2005	New Release
Rev.	Date	Description

Compiled: Elena Invernizzi	Verified Michele Borgonovo:	Approved: Paolo Vismara

CHAPTERS

1 MAIN MENU 2

2 BELL A - BELL B 11

2.1 ACCESS LEVEL TO BELL A BELL B MENU 11
2.2 RUN & FORCED RUN 12
2.3 START HOLD/STOP HOLD 14
2.4 ADJUST RECIPE RUNNING 15
2.5 JUMP STEP 16
2.6 PROCESS STOP 17
2.7 PROCESS ABORT 18
2.8 STOP/RESTART ROTATION 19

3 LIFT 20

3.1 ACCESS LEVEL TO LIFT MENU 20
3.2 USING THE LIFT WINDOW 21
3.3 ERROR MESSAGE OF LIFT WINDOW 22

4 ALARMS 23

4.1 ACCESS LEVEL TO ALARM MENU 23
4.2 VIEW ALARMS 24
4.3 VIEW RECORDED ALARMS 25
4.4 ACTIONS AFTER AN ALARM 27

5 PROGRAM 29

5.1 ADJUST RECIPE STORED 30

6 MANAGEMENT 34

6.1 REACTOR SHUTDOWN 34
6.2 APPLICATION SHUTDOWN 35
6.3 PC SHUTDOWN 36
6.4 REACTOR & PC SHUTDOWN 37
6.5 EMERGENCY SHUTDOWN 38
6.6 CONFIGURATION PARAMETERS 39

1 Main Menu

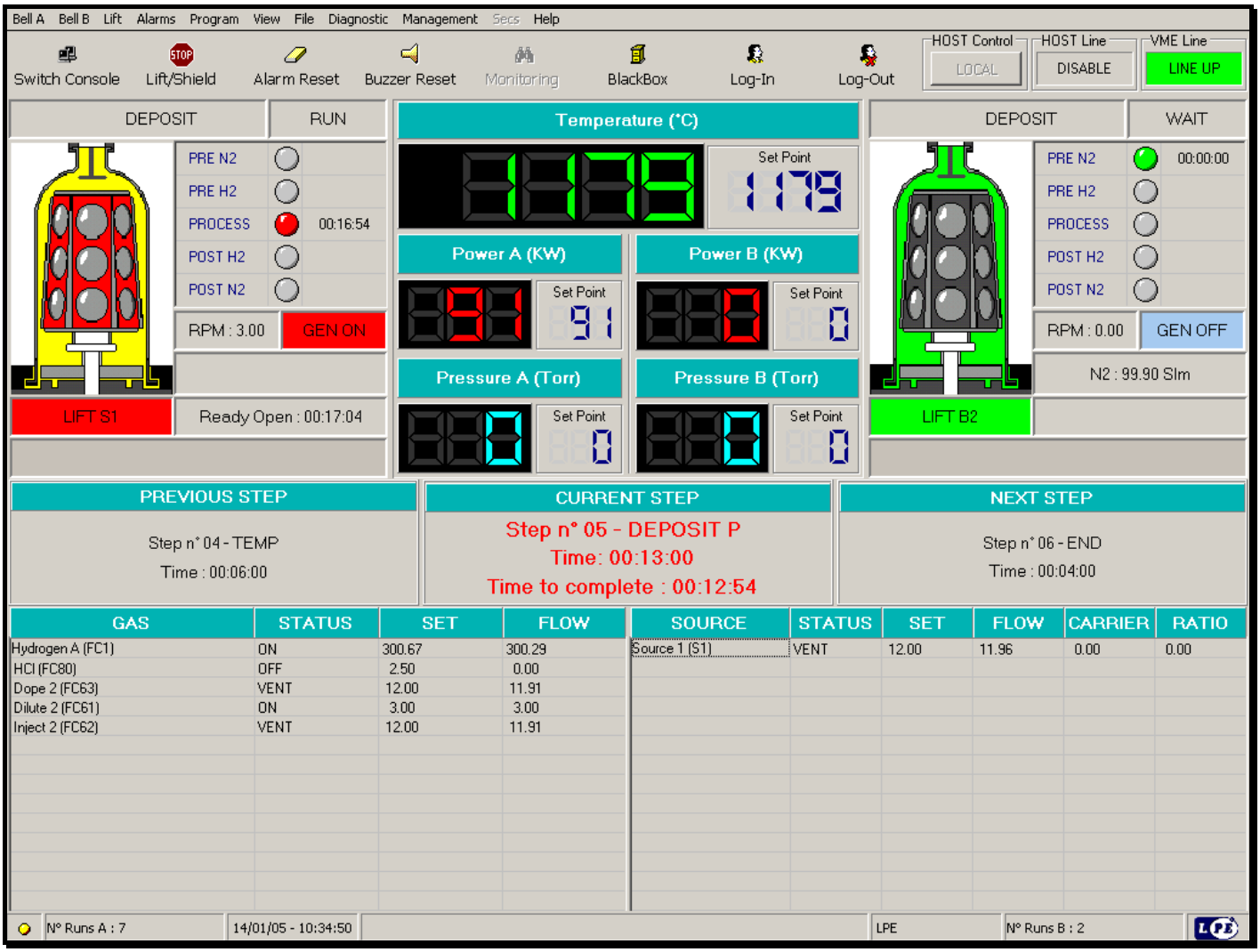

The figure shows the main window of PE2061 graphic user interface (GUI). The following zones can be found in these windows:

Header:

STATUS DISPLAY is located in the header:

- **HOST Control**: this is a button. Host control can be **LOCAL** or **REMOTE**. If control is local all menu keys in the window are available to the operator. If control is remote, the host computer can control reactor and operator can only display data, or move lift, or switch control to local using this button.

- **HOST Line**: This field displays the communication status with the host computer. **ENABLE** means that the communication is up, **DISABLE** means that the communication is down, **and MODIFYNG** means that the communication is going up.

- **VME Line**: this field displays communication status with reactor VME control. **LINEUP** means that communication is up; **LINEDOWN** means that communication is down, CONFIG means that workstation is sending configuration to VME**. If the status is linedown, the operator can't control the machine using the graphical user interface**.

and the **CONTROL BUTTONS:**

- **Switch console:** if is available the remote control system, the operator by pressing this button can switch the control to the reactor from the main controller to the remote one and vice versa.

- **STOP Lift/Shield:** if the operator presses this button, the lift/shield, if moving, stops.

- **Alarm Reset:** if the operator presses this button, the alarm is reset.

- **Buzzer Reset:** if the operator presses this button, the buzzer is reset.

- **Monitoring:** if the operator presses this button, the monitoring programs starts. (NOT AVAILABLE)

- **Black Box:** if the operator presses this button, the black box appears

- **Log-In:** if the operator presses this button opens the password windows in which any user can insert his own user-id and password to accede to menus and command permitted for his job

- **Log-Out:** logs out current user. No action can be undertaken until a new log-in

Menu bar: Using the mouse the operator can access one of the menu items. The functions associated to each menu item are described in the following chapters.

Bell Jar CRT screen section:

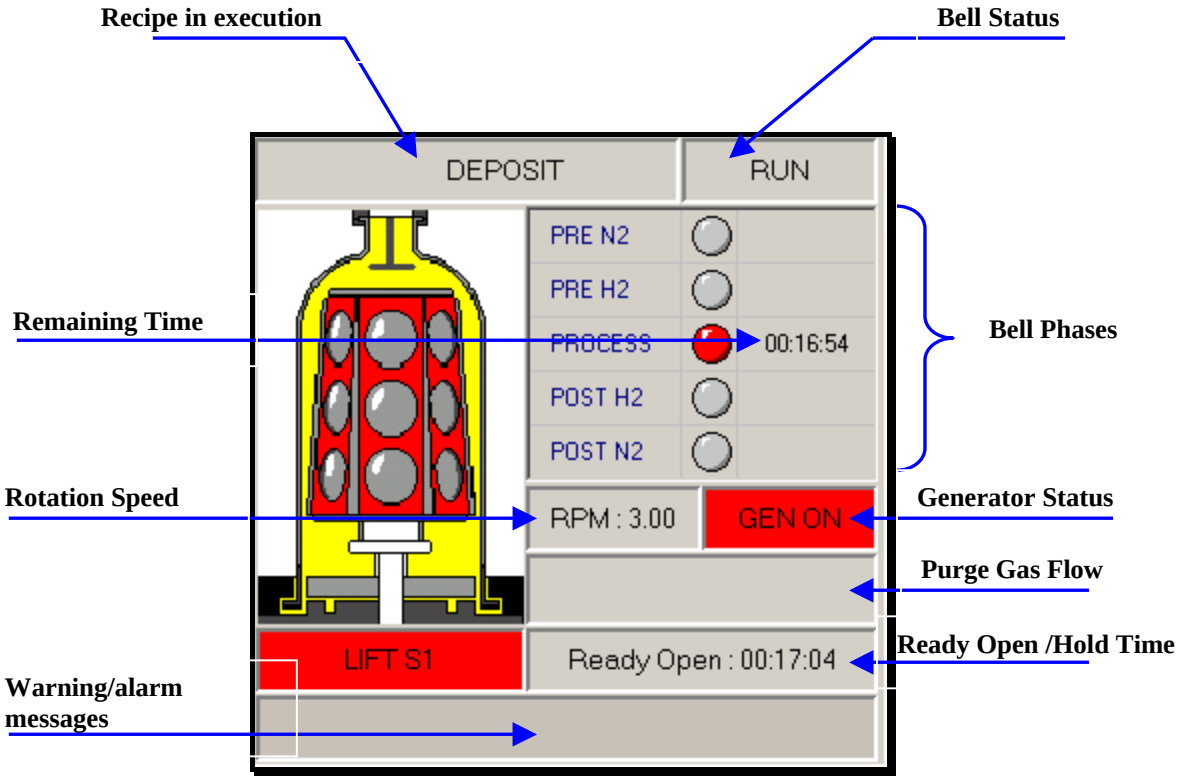

Picture of bell-jar (A side on top CRT on the top left and B side on top right)

There are four main conditions displayed by the bell jar picture:

- With susceptor inside: shutter plate is closed

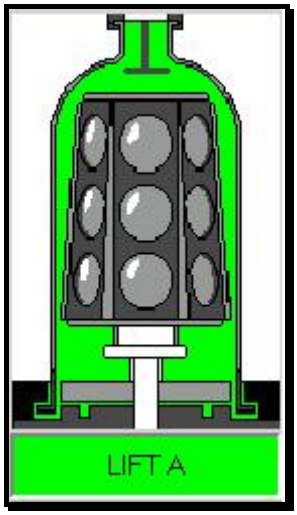

- With half susceptor: shutter plate is open

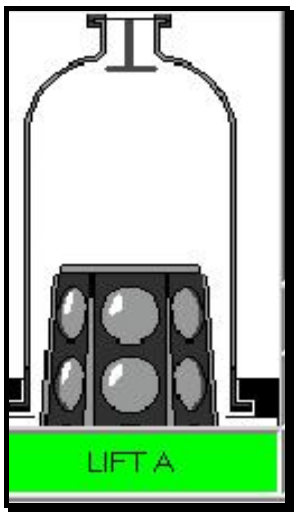

- With half susceptor and two arrow: lift is moving

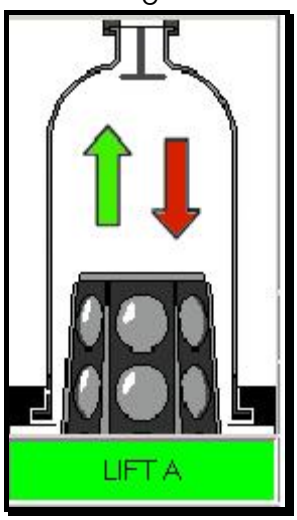

- With half susceptor and the message "LOAD LEVEL": lift is at the loading/unloading level.

The word LIFT:

With GREEN background : LIFT is enabled to move
With RED background : LIFT cannot be moved
With GRAY background : LIFT cannot be moved

Recipe in Execution and Bell Jar Status:

This field contains the indication of the name of the selected recipe (if any) and its status (FREE, RUN, WAIT, END, ABORT, ALARM, HOLD, STOP).

- Free status

PRE N2 phase is ended and the bell can be opened.

- Run status

A recipe has been selected and reactor is either in PRE-N2 purge or PRE-H2 purge or PROCESS (PRE N2 and PRE H2 purges have been completed and the recipe selected is in execution). The bell cannot be opened.

- Wait status

WARNING! FOR MOD. PE2061 ONLY - A recipe has been selected but, being the OTHER bell-jar already in RUN status, this bell-jar is waiting the last minutes of the process on the other bell-jar. There is not a power over lap.

PE2061:

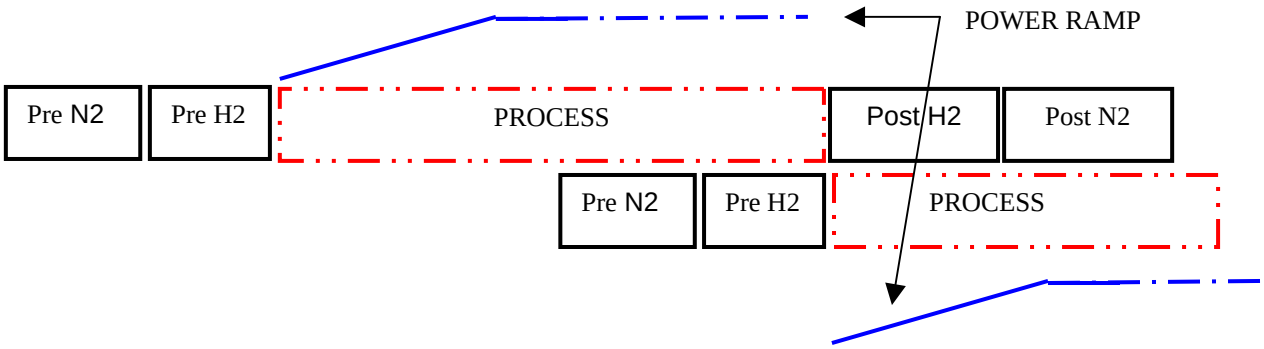

WARNING! FOR MOD. PE2061S ONLY - A recipe has been selected but, being the OTHER bell-jar already in RUN status, this bell-jar is waiting the last minutes of the process on the other bell-jar. This time is the sum of the **PRE H2** time and the **PRE H2 Power Ramp Time.**
During the **PRE H2 Power Ramp Time** there is the power overlap between the two station.

PE2061S:

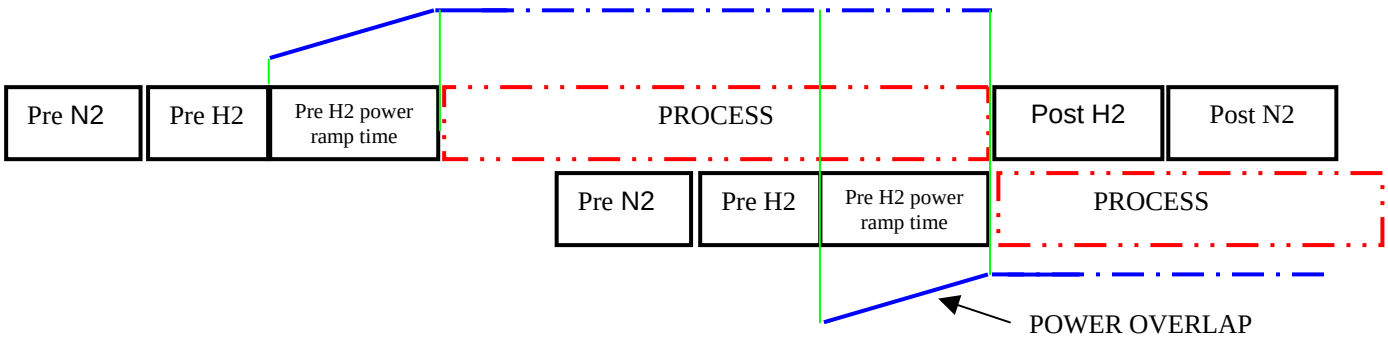

- End Status

The recipe is completed and reactor is either in POST H2 or POST N2 phase.

- Abort Status

The recipe has been aborted and the reactor is either in POST H2 or POST N2 phase.

- Alarm Status

Reactor is in alarm condition. If the phase is PROCESS, the recipe will be aborted and reactor will go in POST H2.

- Hold Status

Recipe execution is frozen to the last condition before receiving the HOLD/RESTART command.

- Stopped status

The recipe has been stopped and the reactor is either in POST H2 or POST N2 phase.

Bell Jar Phase / remaining time:

Beside bell-jar picture, there is the indication of the phase (PRE N2, PRE H2, PROCESS, POST H2, POST N2) and of the time left.

- PRE N2 (Pre purge N2): Nitrogen pre-purge is going on
- PRE H2 (Pre purge H2): Hydrogen pre-purge is going on
- PROCESS: the selected recipe is in execution
- POST H2 (Post purge H2): Hydrogen post-purge is going on
- POST N2 (Post purge N2): Nitrogen post-purge is going on

Rotation Speed:

If bell-jar is in process status: susceptor speed will be displayed. Clockwise or counterclockwise direction is indicated by +/- symbols.

Gas Flow:

If bell-jar is in purge status: Nitrogen flow or Hydrogen flow will be displayed according to purging phase.

Ready Open - Hold Time:

If the bell-jar is in PROCESS, POST H2 or POST N2 status, there is the indication of time left to process end and to bell-jar opening.
If bell-jar is in HOLD status (PROCESS phase) there is the indication of elapsed time in current status.
If phase is PRE H2 or PRE N2, this field is not used.

Alarm Message:

Zone dedicated to alarm messages (yellow for WARNINGS, red for ALARMS).

Top GUI screen Section in the center (PROCESS phase only)

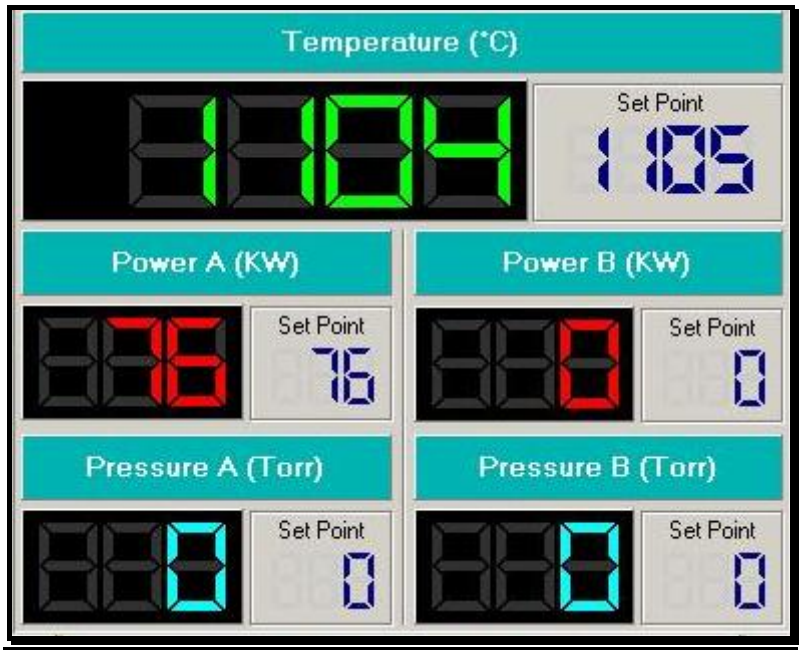

- **Temperature (°C):** actual bell temperature indication with set-point in smaller digits. (Measuring Unit: Celsius degree)
- **Power A (KW):** actual generator power indication with set-point in smaller digits for A side. (Measuring Unit: Kilo Watt)
- **Power B (KW):** actual generator power indication with set-point in smaller digits for B side. (Measuring Unit: Kilo Watt)
- **Pressure A (Torr):** actual bell A pressure indication with set-point in smaller digits. (Measuring Unit: Torr)
- **Pressure B (Torr):** actual bell B pressure indication with set-point in smaller digits. (Measuring Unit: Torr)

Center GUI screen Section

Displays actual status of the running recipe (if any). The window is divided into three zones.

- **Previous Step:** previous recipe step (if any) with total duration.
- **Current Step:** current recipe step with elapsed time and total duration. It is displayed in red
- **Next Step:** next step with total duration.

Lower GUI screen Section

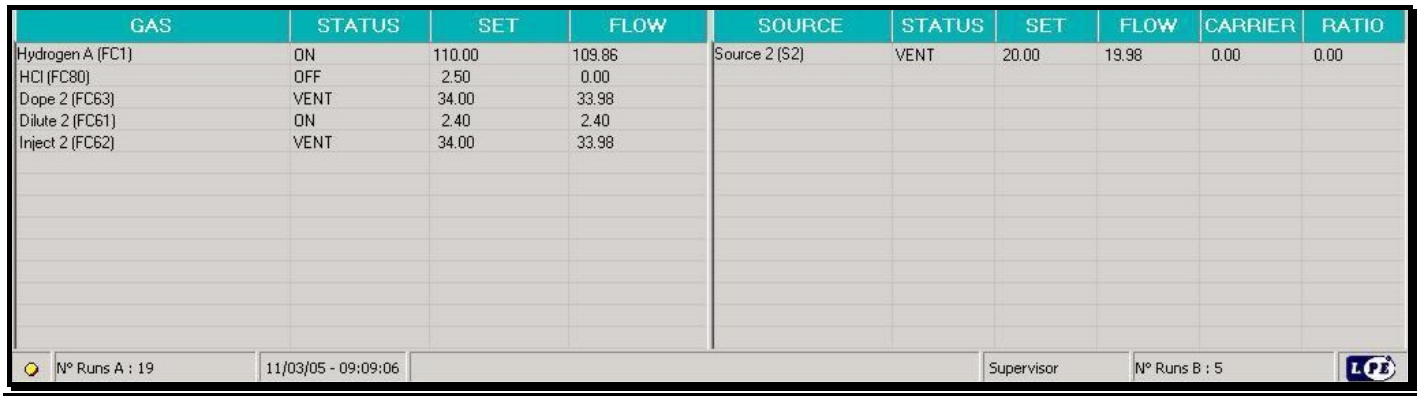

GAS	STATUS	SET	FLOW
Hydrogen A (FC1)	ON	110.00	109.86
HCl (FC80)	OFF	2.50	0.00
Dope 2 (FC63)	VENT	34.00	33.98
Dilute 2 (FC61)	ON	2.40	2.40
Inject 2 (FC62)	VENT	34.00	33.98

SOURCE	STATUS	SET	FLOW	CARRIER	RATIO
Source 2 (S2)	VENT	20.00	19.98	0.00	0.00

N° Runs A : 19 | 11/03/05 - 09:09:06 | Supervisor | N° Runs B : 5

Displays process gases actually used in current process with indication of:

- **Gas:** kind of gas in bell (HCL, SX1, DOPE1…)
- **Status:** status of the process gas (OFF, ON, VENT, BELL…)
- **Set:** MFC set point
- **Flow:** MFC real flow
- **Carrier:** source vaporizer H2 carrier.
- **Ratio:** source vaporizer mix ratio.

Run counter:

- **N. Runs A**: displays a counter of all runs performed at A side. This counter can be reset on the Management → Reactor Consumption menu.
- **N. Runs B**: displays a counter of all runs performed at B-side. This counter can be reset on the Management → Reactor Consumption menu.

Date and Time: shows the current date and hour.

Logged users: shows the current User logged-in

2 Bell A - Bell B

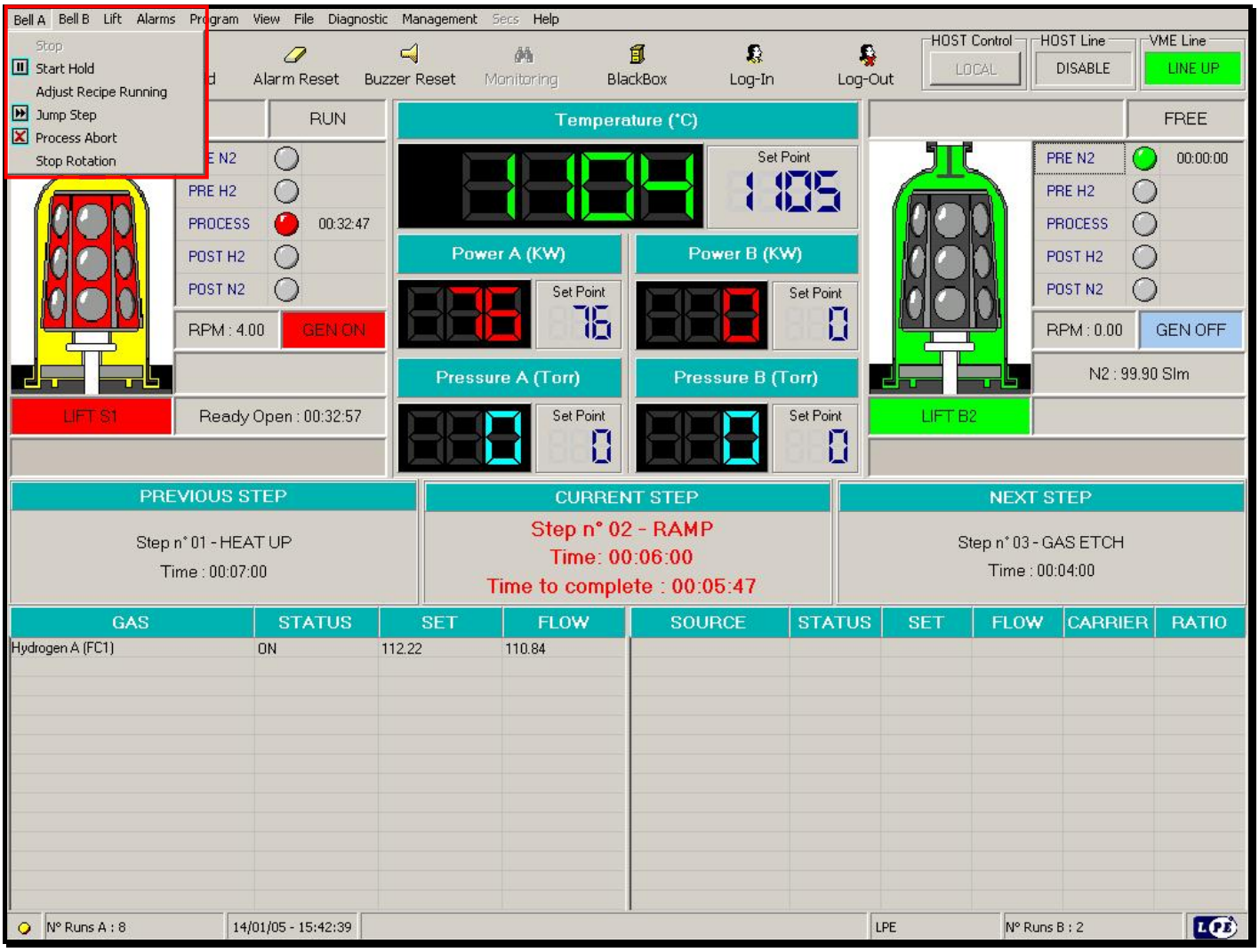

2.1 Access Level to Bell A Bell B menu

Users have different access to the Bell A/B menu according to the below Access list.

LPE Level1 = Full Access

Supervisor Level 2 = Full Access

Maintenance Level 3 = Full Access

Programme Level 4 =Full Access

User Level 5 = Partial access according to Reactor Options configuration

2.2 Run & Forced Run

The RUN command starts the epi process and changes bell-jars status to RUN or WAIT depending on the situation.
At every use of RUN command, if a threshold is exceeded (i.e. total runs with same susceptor) the "Reactor Consumption" window will be displayed.
The threshold exceeded is highlight in yellow color.
Confirmation required to go on.
All "Reactor Consumption" thresholds can be settled in the Management → Reactor Consumption menu.

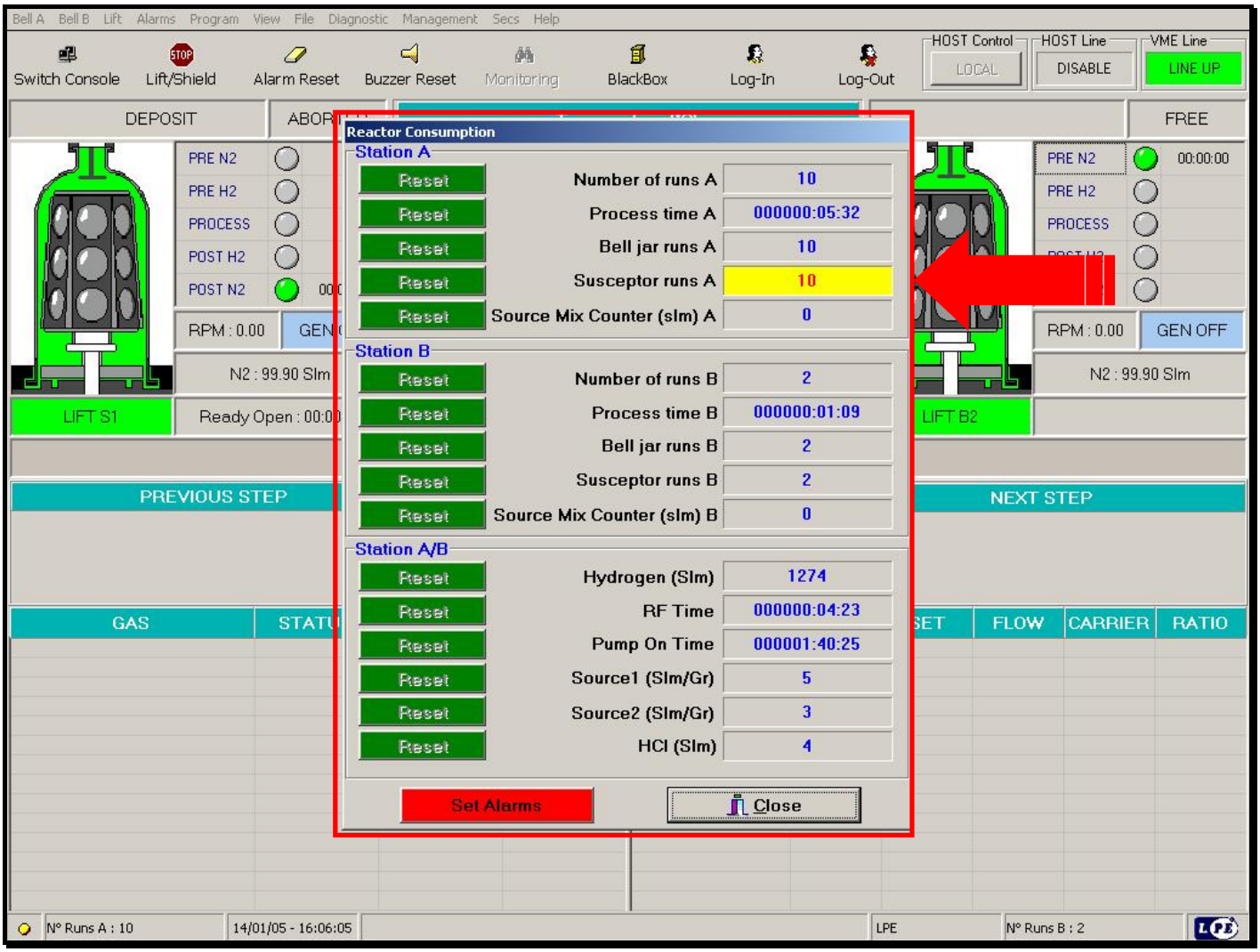

To select a recipe, with mouse, click two-times on the recipe name and than click the OK button to confirm or CLOSE button to return back.

Only the recipes related to the selected Bell (A or B) are shown to the User. The selected recipe will be displayed together with two buttons:

- **OK:** the selected bell-jar and recipe will be set to RUN status unless the other bell-jar is already in RUN or PROCESS status. In this case, the selected bell-jar and recipe will be set to WAIT status. In both cases the RUN command is completed and the general display is shown.

- **Close: to** choose another recipe.

Execution of a RUN command is stored in the BLACK BOX.

SPECIAL SITUATION: how to force a process

Choose the RUN command when the bell jar is in POST H2 or POST N2 purge to force a process.

The "CONFIRM FORCED RUN?" window appears.

By choosing the OK button, the usual RUN command procedure will be followed, but with some differences.

- If the bell jar is in POST H2 and has to be moved to RUN status, it will directly go to PROCESS status, skipping the useless (in this case) PRE H2 purge.

- If the bell jar is in POST N2 and has to go to RUN status, it will directly go to the PRE H2 purge.

- If the bell jar goes to WAIT status, there will be no modification on the POST H2 & N2 purges until next RUN status.

WARNING!

ONLY MOD. PE 2061S

- If the bell jar is in POST H2 and has to be moved to RUN status, it will go to PRE H2 status.

Note:

The FORCED RUN command can be denied to user with access level only to User Level 5 selecting the apposite options in Configuration menu.

2.3 Start Hold/Stop Hold

This command is available only when a bell jar is in process.
Select this command to hold the recipe execution.
Please note that use of START HOLD/STOP HOLD command during a ramp, will freeze it in the current situation.
Enter this command again to restart the process.
When the process is in HOLD status, HOLD time is counted and displayed.
The execution of a HOLD command is stored in the BLACK BOX.

Note:
The START HOLD/STOP HOLD command can be protected under process engineer password by selecting the apposite options on Configuration menu.

WARNING!
Hold command is not allowed when the other bell jar is in **WAIT** status. It will be necessary to stop the bell jar in **WAIT** before proceeding.

2.4 Adjust Recipe Running

This command is available only when a bell jar is in process. Select this command to modify process running under the following conditions:

- The process is in HOLD status.
- Recipe lines belonging to current step cannot be modified. Current step is highlighted in yellow color.
- Recipe lines declared as not modifiable (red locker) cannot be modified.

The modifiable values are:

- Start value, stab value, stab time when available.
- Stab time for the entire step.

For details see Program → Adjust Recipe Stored command.

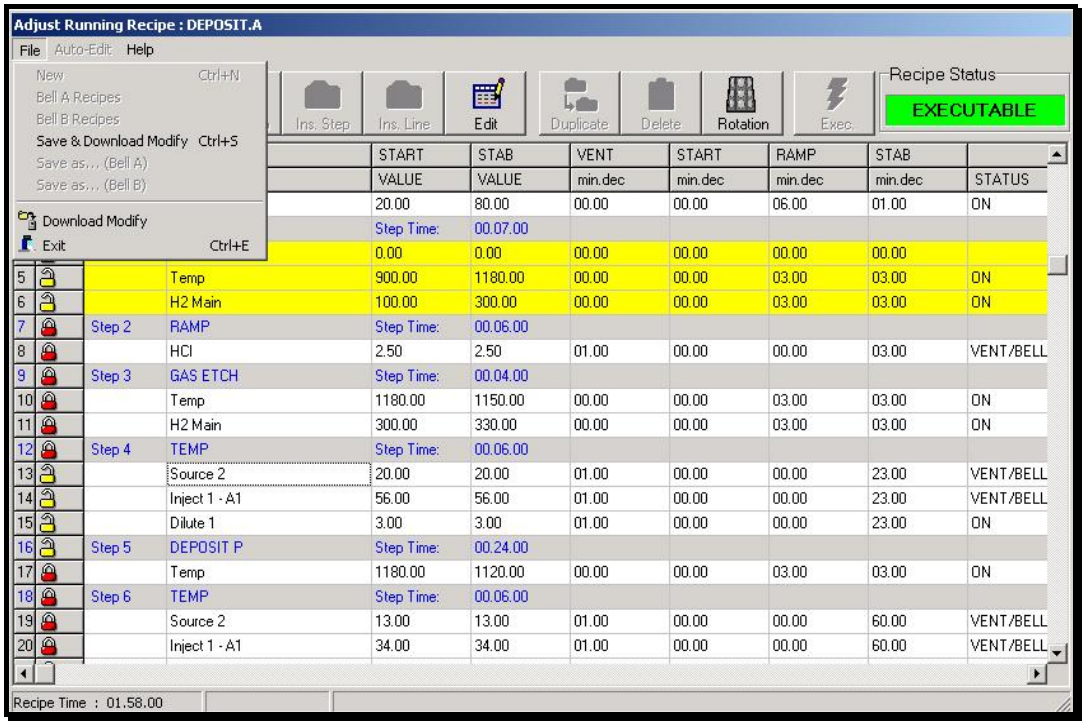

Once the modification has been confirmed, click on the *Download* button or select *Download Modify* from *File* menu. After that it is necessary restart the process through the *Stop Hold* command.
Then the MODIFIED program will be executed.
However the modifications will not be stored in the workstation and will not be executed the next time the recipe will be used.
If the MODIFIED program should be also saved, select *Save & Download Modify* from file menu.
If the program is to be modified WITHOUT immediately executing the modifications, it is preferable to use the ADJUST RECIPE STORED command.

2.5 Jump Step

This command is available only when a bell jar is in process.
Select this command to stop current step and immediately jump to next step.

IMPORTANT !!!
Jump is immediate and current step will not be completed.
As an example, during a temperature ramp, jump command will leave the temperature value at the current value and temperature will not increase/decrease at the end value of the ramp.
The command requires confirmation.
The command cannot be used during the last step or in HOLD status (error message).
The execution of a JUMP command is stored in the BLACK BOX.

2.6 Process Stop

This command is available only when a bell jar is in RUN status during the PRE N2 or PRE H2 status.

WARNING!

ONLY FOR MOD. PE2061:
STOP command will cause bell jar to jump from PRE N2 or PRE H2 directly to PRE N2.

WARNING!

ONLY FOR MOD. PE2061S
STOP command will cause bell jar to jump from PRE N2 to PRE N2 and from PRE H2 to POST H2.

The execution of a STOP command is stored in the BLACK BOX.

2.7 Process Abort

This command is available only when a bell jar is in PROCESS.
Select this command to stop process execution and jump directly to POST H2 purge status.
The command requires confirmation.
The execution of an ABORT command is stored in the BLACK BOX.

2.8 Stop/Restart Rotation

This command is only for skilled engineers trained in the use of PE 2061 or PE2061S Epitaxial Reactor.

Select this command to stop rotation in order to facilitate temperature measurement.

The process must be in HOLD STATUS and silicon must not be in BELL STATUS (sourx 1 or 2 or 3 = OFF).

3 Lift

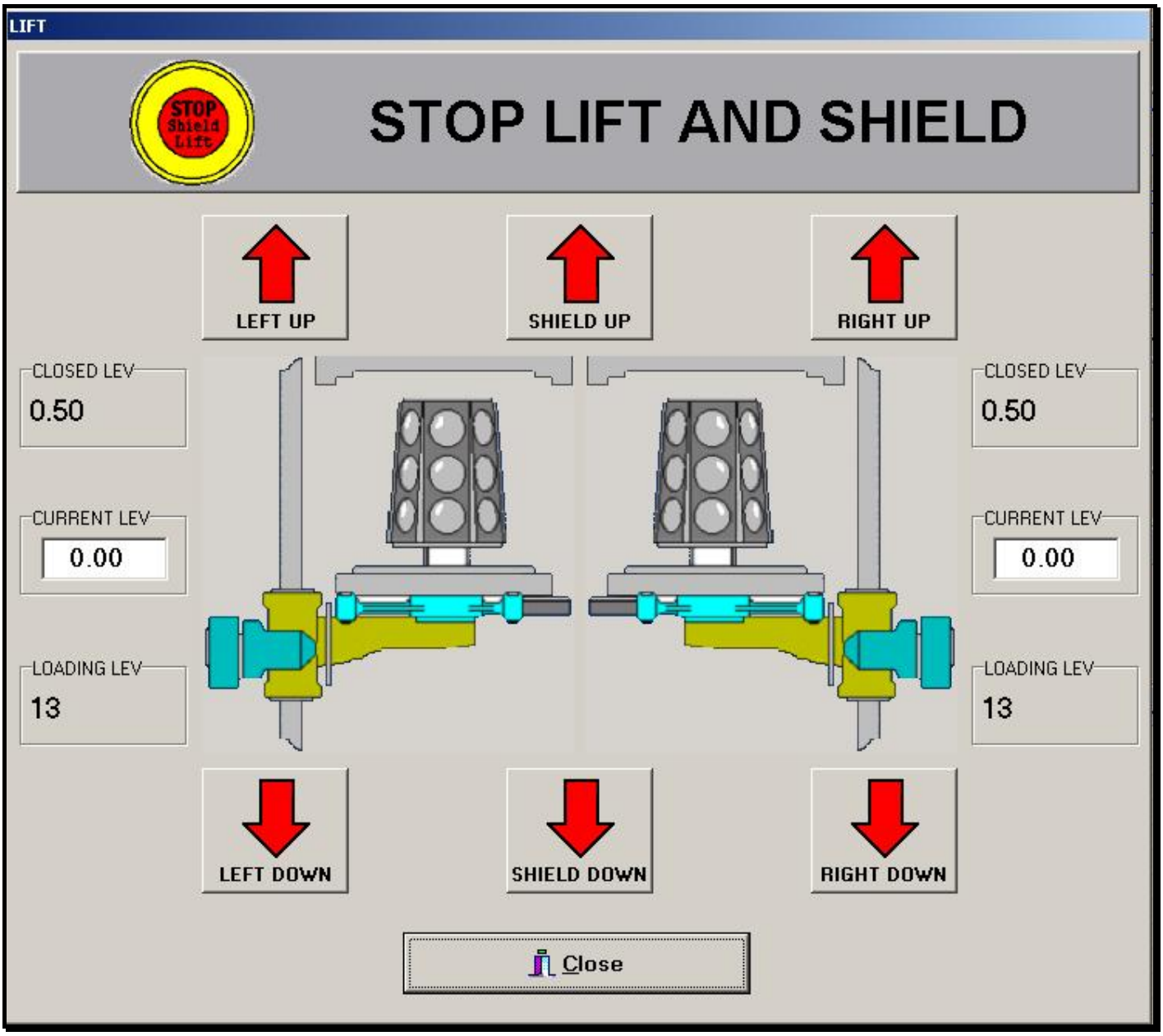

3.1 Access Level to lift menu

All users can access to this menu.

3.2 Using the lift window

By selecting the "lift" menu the reactor operator can get the control window for lifts and shield movements and proceed to wafers loading/unloading.

By selecting the correspondent arrow button the operator can move up and down:

- The shield .
- The lift for chamber A.
- The lift for chamber B.

The lift motion is shown on the "Current level" field. The "current level" is the feedback from the potentiometer mounted on each lift.

Note:
When the lift is completely up in the bell-jar field a susceptor will appear and on the "current level" field will be displayed the value of 0,50 Vdc.
When the operator press the down arrow the lifts automatically stop in the load/unload position stored in the computer memory and showed in the "Load level" field:

- The "current level" field; will show the same value of the "load level" field. (The "load level" can be set in the Management → Management of lift, menu).
- When the lift is in the loading position, in the bell-jar field the message **"LOAD LEVEL"** will appear.

Click the **STOP Lift/Shield** button key to stop the lift or the shield in a position other than the load/unload position.
Lifts' movement is allowed only within the **LIFT** menu.

Buttons:

- LIFT A UP: by means of this command the A side lift moves UP.
- LIFT A DOWN: by means of this command the A side lift moves DOWN.
- LIFT B UP: by means of this command the B side lift moves DOWN.
- LIFT B DOWN: by means of this command the B side lift moves DOWN.
- SHIELD UP: by means of this command the A side lift moves DOWN.
- SHIELD DOWN: by means of this command the A side lift moves DOWN.
- STOP LIFT AND SHIELD: by means of this command the lift or shield in movement STOPS.
- SET LOAD LEVEL A: set the A side lift loading/unloading level
- SET LOAD LEVEL B: set the B side lift loading/unloading level
- CLOSE: closes window but don't stop the lift/shield movement.

3.3 Error message of lift window

For safety purposes, if the opening consent is missing, it is not possible move the lift by the arrows. The lifts **CANNOT** be moved if:

- The quartz-guards are outside the table. The warning message "LIFT A/B PORT/ QUARTZ GUARD SHIELD WARNING! Stop movements Lift!" appears.
- The relevant lift door is opened. The warning message "LIFT A/B PORT/ QUARTZ GUARD SHIELD WARNING! Stop movements Lift!" appears.
- The shield is open. The warning message "FRONT SHIELD OPEN WARNING!Stop Movements Lift! " appears.
- There is vacuum between bell-jar o-rings. The warning message "LIFT A INFO VACUUM BETWEEN O-RING! Stop Movements Lift!" appears.
- The word LIFT is displayed in red background (bell –jar in PreH2 or PROCESS or POST H2 or POST N2 status).

Note:

- The two lifts and the shield **CANNOT** be moved simultaneously.
- If the lift is in movement and the lift door or the shield are manually forced to open, the lift motion will be stopped automatically and the warning message LIFT A/B PORT/ QUARTZ GUARD SHIELD WARNING! Stop movements Lift !", or FRONT SHIELD OPEN WARNING!Stop Movements Lift! appears.
- If the **LIFT** menu is quitted through the **CLOSE BUTTON**, lift movement will not be stopped. To stop lift movement, click **STOP Lift/Shield** red button on application buttons bar.

4 Alarms

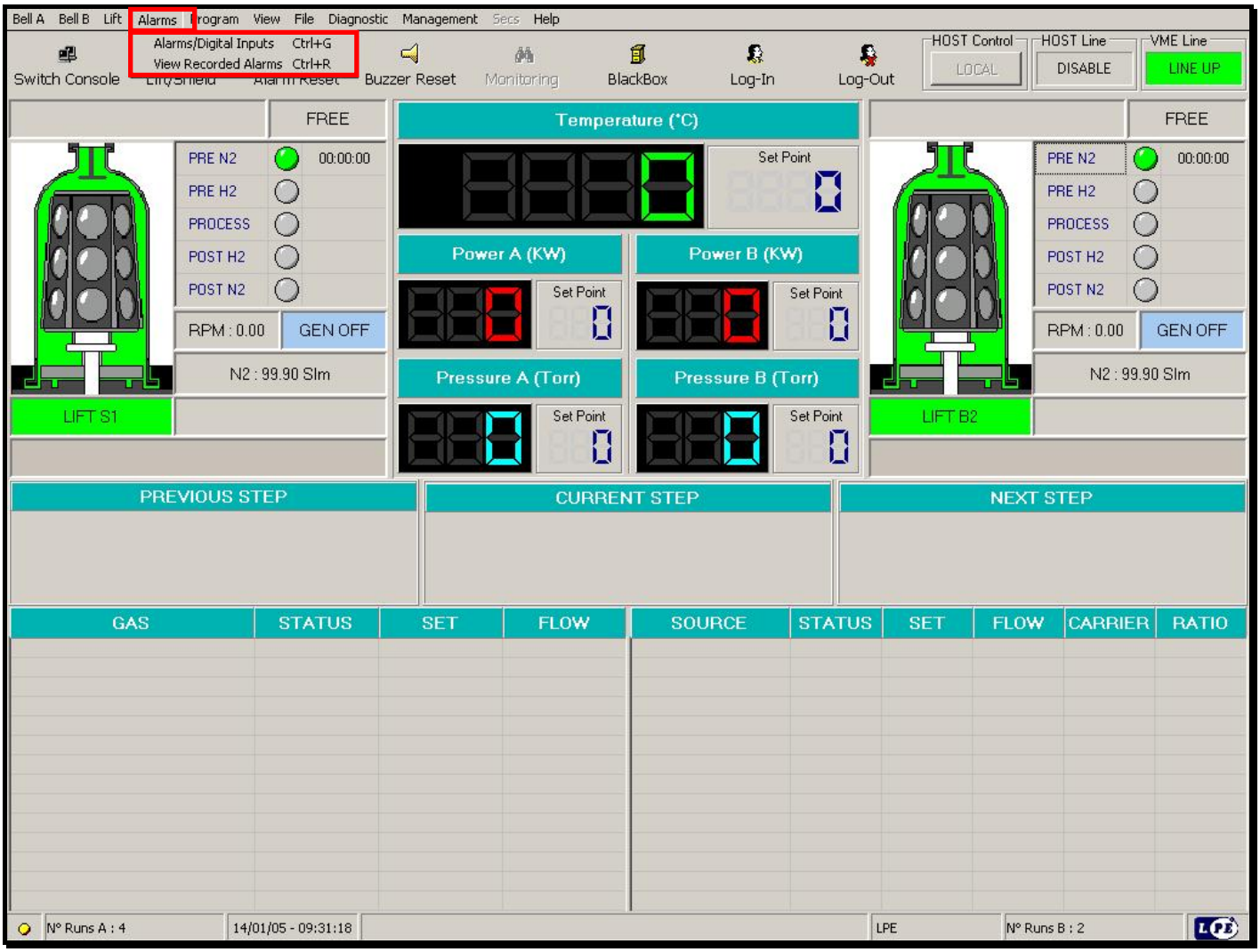

4.1 Access Level to Alarm menu

All users can access to this menu.

4.2 View Alarms

This window displays reactor alarm situation.
Beside each alarm, a color light and the alarm type is displayed:

GREEN LIGHT: relevant alarm is not present
RED LIGHT: relevant alarm is present
YELLOW LIGHT: relevant alarm is NOT activated on the reactor

4.3 View Recorded Alarms

Pressing Black Box Button on Main page or by the alarm menu, this window will appear.

The Black Box records the history of the reactor, saving EVENTS, ERRORS, ALARMS and COMMANDS. Each line is divided in fields that describe various aspects of the item.
The Black Box is just for visualization and there is no way to modify data inside.

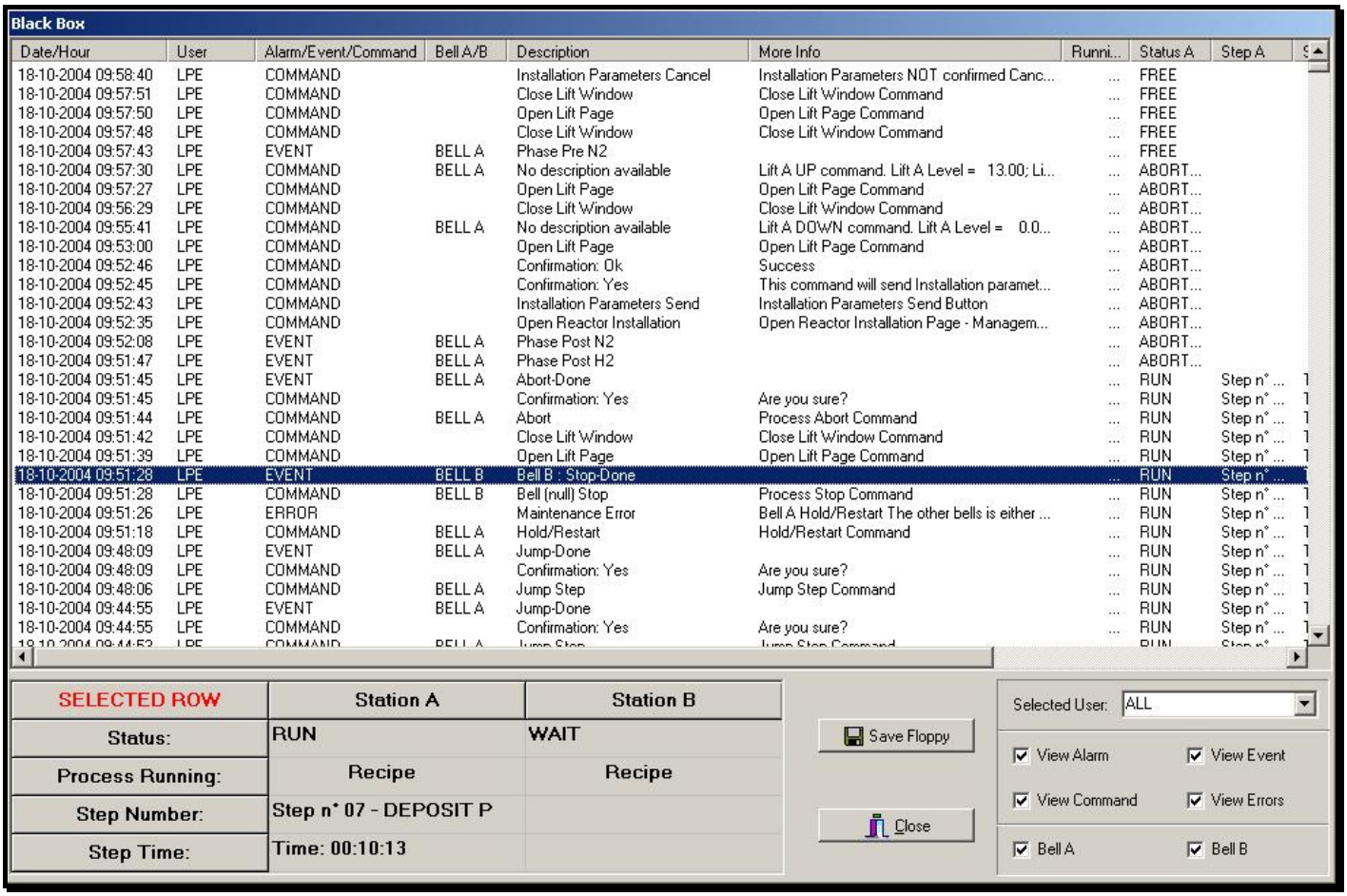

Buttons and check boxes:

- Selected User: this field allows the analyzer to display only lines written while a particular person was logged. The user selection is done by clicking two times with the mouse left button on the user name into the user column.

- View *** checkboxes: if a checkbox is checked, Black Box window will display all the lines belonging to that category. It's very useful is the Black Box analyzer wants to know, for example, only alarms.
- Save (floppy): allows the monthly black box file to be saved on an empty and formatted 1.44 MB 3,5" floppy disk. This command will create a .zip file named BlackBoxNN.zip, where NN stands for the current month set on GUI PC (for example BlackBox07.zip means the Black Box file of July. This shrinking feature allows Black Box file to grow almost without limitation, without loosing the possibility of recording files and studying them later somewhere else. To read BlackBoxNN.zip files on another PC, it is necessary to have WinZip (or similar programs) installed.

- Close: this command will close the window, without saving or modifying any data.

Column Descriptions:

- Date/Hour: it's the exact time in which what's described in the line happened.
- User: it's the user logged in. At the time, no user management is configured, so this field will be filled with the two values SYSTEM and ALL (that means unknown person).
- Alarm/Event/Command: this field describes the category of the line. Categories are four:

a) EVENTS: something modified the reactor state. For example, internal controller switched reactor from PREN2 to PREH2.
b) ERRORS: a wrong command has been given.
c) ALARMS: an alarm or a warning occurred on the reactor.
d) COMMANDS: a command has been given to the reactor.

- Bell A/B: highlight to which station the Alarm/Event/Command is related.
- Description: a brief, but exhaustive explanation.
- More info: here it is collected every information useful to better understands the reactor state when that line was written.
- Running A/B: if the Alarm/Event/Command happen during process the process name is collected.
- Status A/B: is the bell status once the Alarm/Event/Command happen.
- Step A/B: is the step on which the Alarm/Event/Command happen.
- Step Time A/B: is the time elapsed from the beginning of the step on which the Alarm/Event/Command happen.

4.4 ACTIONS AFTER AN ALARM

Regarding the type of an alarm, different actions can be performed.

Alarm types are:

- **TYPE " W "** (WARNING)
- **TYPE " H "** (HYDROGEN)
- **TYPE " N "** (NITROGEN)

Some safeties can be delayed.
This means that an action is activated only if a trouble has been occurring for a time exceeding a default value.

Intervention description:

TYPE " W " (WARNING)

If a W safety is activated, means that there is a reactor malfunctioning.
However this situation does not affect either wafers' quality or reactor integrity.
The fault is displayed and stored in the BLACK BOX.
Reactor buzzer gives out a continuous sound, but the reactor controller does not take any actions.
An "H" or "N" alarm may be activated after the Warning.
The "W" faults will not allow starting new processes.

TYPE " H " (HYDROGEN COOL DOWN)

If an H safety is activated, this means that there is a reactor malfunctioning, which could affect either, wafers quality or reactor integrity. Reactor controller acts as follows:

PREVIOUS STATUS	**NEXT STATUS**
PRE-PURGE N2	NO CHANGE
PRE-PURGE H2	PRE-PURGE N2
PROCESS	POST-PURGE H2
POST-PURGE H2	NO CHANGE
POST-PURGE N2	NO CHANGE

The RUN/WAIT status is ALWAYS disabled when present.
The alarm is stored in the BLACK BOX.
If an alarm regards one bell-jar only (i.e. FLOW-SWITCH SHUTTER PLATE B), the controller action will not affect the other bell-jar.
If an alarm affects both bell-jars (i.e. BLOWER MOTOR THERMAL SWITCH), the controller action will affect both bell-jars. Through View → View Alarms menu, it is possible to check if the alarm is still pending.

TYPE " N " (NITROGEN COOL DOWN)

If an N safety is activated, this means that there is a reactor malfunctioning, which could affect the reactor integrity.

In such a situation, the reactor computer moves both the bell-jars directly to POST-N2 status, skipping the H2 cool down post purges.
The alarm is stored in the BLACK BOX.

For the list of alarms, see chapter " **Reference on screen messages list and description".**

5 Program

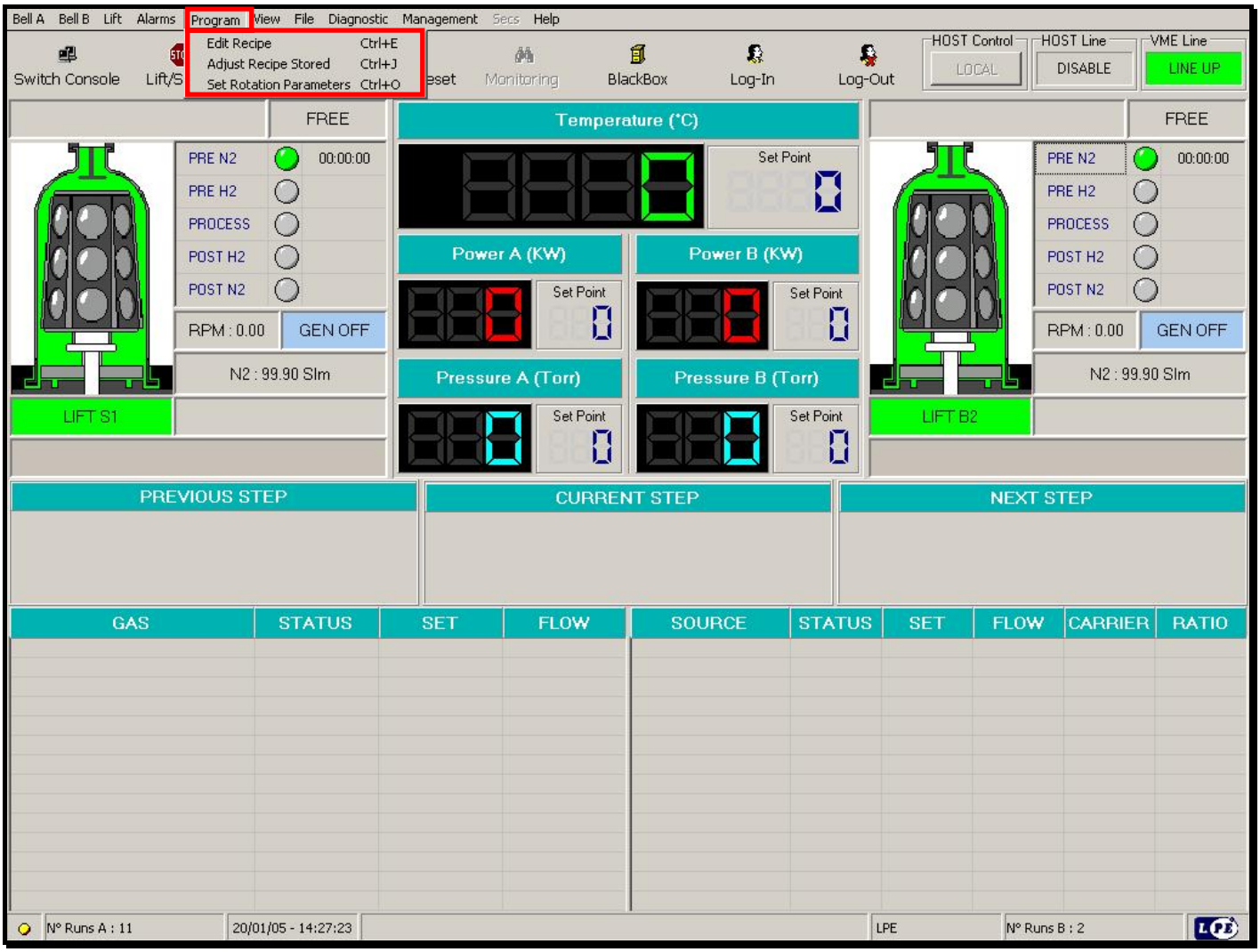
Bell A
Bell B
Lift
Alarms
Program
View
File
Diagnostic
Management
Secs
Help
Edit Recipe Ctrl+E
Adjust Recipe Stored Ctrl+J
Set Rotation Parameters Ctrl+O
Switch Console
Monitoring
BlackBox
Log-In
Log-Out
HOST Control
LOCAL
HOST Line
DISABLE
VME Line
LINE UP
FREE
PRE N2
PRE H2
PROCESS
POST H2
POST N2
00:00:00
RPM : 0.00
GEN OFF
N2 : 99.90 Slm
LIFT S1
LIFT B2
Temperature (°C)
Set Point
Power A (KW)
Power B (KW)
Pressure A (Torr)
Pressure B (Torr)
PREVIOUS STEP
CURRENT STEP
NEXT STEP
GAS
STATUS
SET
FLOW
SOURCE
CARRIER
RATIO
N° Runs A : 11
20/01/05 - 14:27:23
LPE
N° Runs B : 2

5.1 Adjust Recipe Stored

Select this command to modify a recipe stored in the disk by a limited set of commands.

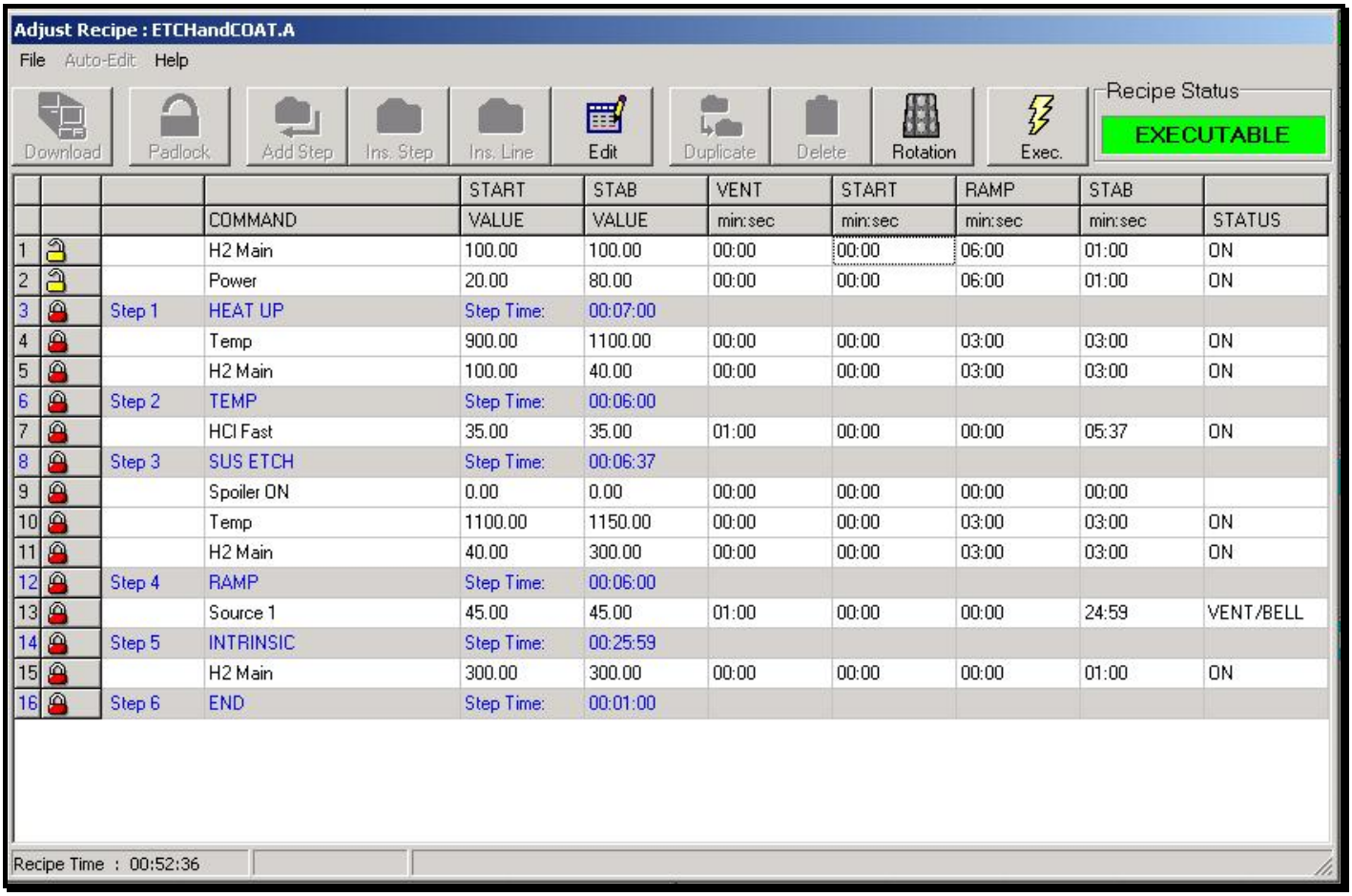

			COMMAND	START VALUE	STAB VALUE	VENT min:sec	START min:sec	RAMP min:sec	STAB min:sec	STATUS
1			H2 Main	100.00	100.00	00:00	00:00	06:00	01:00	ON
2			Power	20.00	80.00	00:00	00:00	06:00	01:00	ON
3		Step 1	HEAT UP	Step Time:	00:07:00					
4			Temp	900.00	1100.00	00:00	00:00	03:00	03:00	ON
5			H2 Main	100.00	40.00	00:00	00:00	03:00	03:00	ON
6		Step 2	TEMP	Step Time:	00:06:00					
7			HCl Fast	35.00	35.00	01:00	00:00	00:00	05:37	ON
8		Step 3	SUS ETCH	Step Time:	00:06:37					
9			Spoiler ON	0.00	0.00	00:00	00:00	00:00	00:00	
10			Temp	1100.00	1150.00	00:00	00:00	03:00	03:00	ON
11			H2 Main	40.00	300.00	00:00	00:00	03:00	03:00	ON
12		Step 4	RAMP	Step Time:	00:06:00					
13			Source 1	45.00	45.00	01:00	00:00	00:00	24:59	VENT/BELL
14		Step 5	INTRINSIC	Step Time:	00:25:59					
15			H2 Main	300.00	300.00	00:00	00:00	00:00	01:00	ON
16		Step 6	END	Step Time:	00:01:00					

Modifications available:

- Set point and time in a line
  Select the line with the mouse pointer and press the Edit button.
  A line cannot be modified with the closed lock icon (this is a not modifiable line).

- Step time and set point
  STAB TIME, and the SOURX, INJECT, DILUTE set point can be modified also within a step.
  The difference between LINE and STEP must be kept in mind (see the beginning of this chapter).

- Save recipe from station A to station B
  It is possible save the selected recipe from station A to station B and vice versa.
  This command for default is not available. It is possible make it available by the Management → Reactor Configuration → Reactor Options menu. The reactor configuration menu is protected by the supervisor password.

- Set recipe as executable
  It is possible make executable the selected recipe for the RUN A or RUN B menu.
  This command for default is not available. It is possible make it available by the Management → Reactor Configuration → Reactor Options menu. The reactor configuration menu is protected by the supervisor password.

To be helped in adjusting deposit step

Click on the blue marker of the deposit step to select it and will appear the following window:

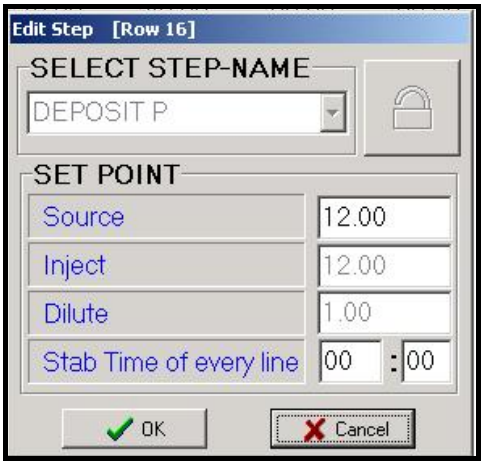

This window will help the operator to easily change the most important, recipe parameters.
The value in black color can be modified and the value in gray color not, because the corresponding line it is locked.

The time in this window can be entered in minute and second or in tenth of minute depending on the selection done in the Management → Reactor Configuration → Parameters → Set base time, menu.

As further help to avoid miss typing any changed performed to the recipe will be highlighted with a yellow color to facilitate the control of the new entered value.
I.e.: let starts from he below recipe:

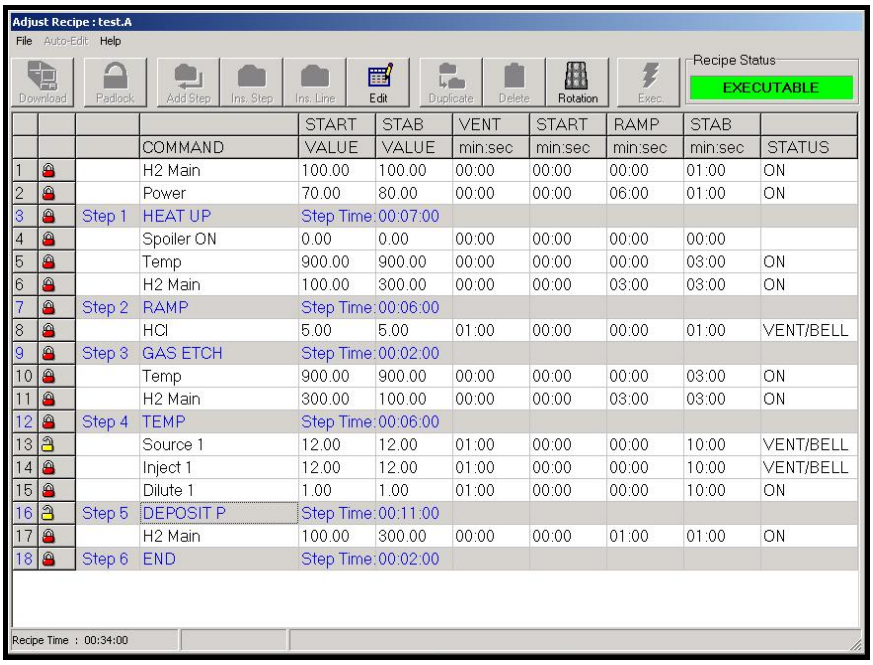

			COMMAND	START VALUE	STAB VALUE	VENT min:sec	START min:sec	RAMP min:sec	STAB min:sec	STATUS
1			H2 Main	100.00	100.00	00:00	00:00	00:00	01:00	ON
2			Power	70.00	80.00	00:00	00:00	06:00	01:00	ON
3		Step 1	HEAT UP	Step Time:	00:07:00					
4			Spoiler ON	0.00	0.00	00:00	00:00	00:00	00:00	
5			Temp	900.00	900.00	00:00	00:00	00:00	03:00	ON
6			H2 Main	100.00	300.00	00:00	00:00	03:00	03:00	ON
7		Step 2	RAMP	Step Time:	00:06:00					
8			HCl	5.00	5.00	01:00	00:00	00:00	01:00	VENT/BELL
9		Step 3	GAS ETCH	Step Time:	00:02:00					
10			Temp	900.00	900.00	00:00	00:00	00:00	03:00	ON
11			H2 Main	300.00	100.00	00:00	00:00	03:00	03:00	ON
12		Step 4	TEMP	Step Time:	00:06:00					
13			Source 1	12.00	12.00	01:00	00:00	00:00	10:00	VENT/BELL
14			Inject 1	12.00	12.00	01:00	00:00	00:00	10:00	VENT/BELL
15			Dilute 1	1.00	1.00	01:00	00:00	00:00	10:00	ON
16		Step 5	DEPOSIT P	Step Time:	00:11:00					
17			H2 Main	100.00	300.00	00:00	00:00	01:00	01:00	ON
18		Step 6	END	Step Time:	00:02:00					

If the operator modify the Source setting from **12.00** to **12.50** Slm and the deposit time from **10.00** to **11:00** minute the recipe will appears as follow.

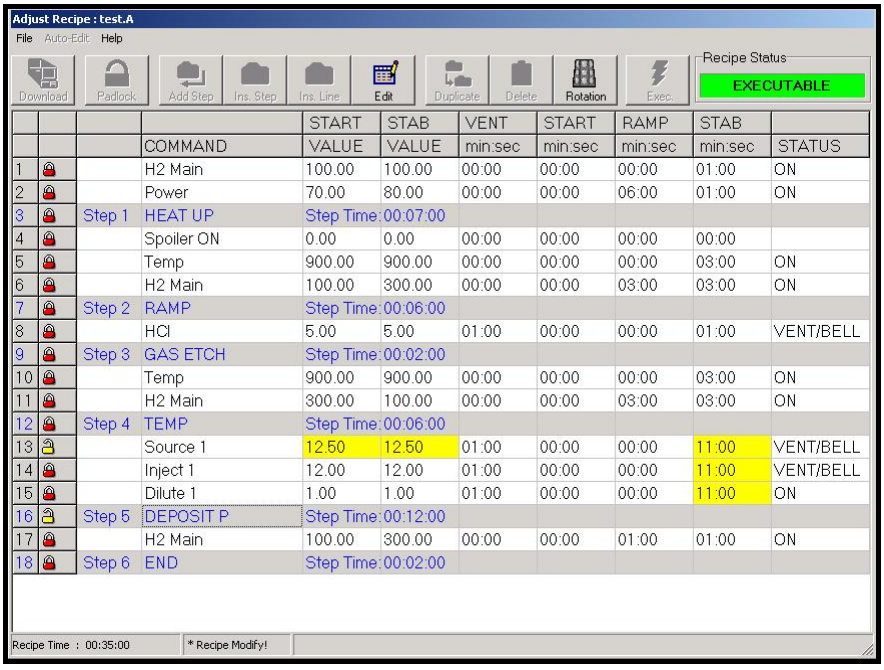

			COMMAND	START VALUE	STAB VALUE	VENT min:sec	START min:sec	RAMP min:sec	STAB min:sec	STATUS
1			H2 Main	100.00	100.00	00:00	00:00	00:00	01:00	ON
2			Power	70.00	80.00	00:00	00:00	06:00	01:00	ON
3		Step 1	HEAT UP	Step Time:	00:07:00					
4			Spoiler ON	0.00	0.00	00:00	00:00	00:00	00:00	
5			Temp	900.00	900.00	00:00	00:00	00:00	03:00	ON
6			H2 Main	100.00	300.00	00:00	00:00	03:00	03:00	ON
7		Step 2	RAMP	Step Time:	00:06:00					
8			HCl	5.00	5.00	01:00	00:00	00:00	01:00	VENT/BELL
9		Step 3	GAS ETCH	Step Time:	00:02:00					
10			Temp	900.00	900.00	00:00	00:00	00:00	03:00	ON
11			H2 Main	300.00	100.00	00:00	00:00	03:00	03:00	ON
12		Step 4	TEMP	Step Time:	00:06:00					
13			Source 1	12.50	12.50	01:00	00:00	00:00	11:00	VENT/BELL
14			Inject 1	12.00	12.00	01:00	00:00	00:00	11:00	VENT/BELL
15			Dilute 1	1.00	1.00	01:00	00:00	00:00	11:00	ON
16		Step 5	DEPOSIT P	Step Time:	00:12:00					
17			H2 Main	100.00	300.00	00:00	00:00	01:00	01:00	ON
18		Step 6	END	Step Time:	00:02:00					

The modified values remains highlighted until the save or exit command.

Set rotation parameter

If the Process Engineering allows the Operator to change the Rotation value, it is possible to modify the rotation parameter for the deposition step.
(see the "Edit Recipe" menu in the Program chapter)

IMPORTANT !!!

In the following situation:

- Recipe selected with RUN command and reactor in RUN / WAIT status
- ADJUST RECIPE STORED command used on the **same** recipe in the RUN / WAIT status
- Recipe modification done and saved **before** RUN ==> PROCESS passage ==>the recipe to be run is **the modified recipe.**

6 Management

6.1 Reactor Shutdown

The reactor shutdown command switches OFF the reactor correctly.
Unlike as "Reactor and station shutdown" command, the workstation is not switched off.

6.2 Application Shutdown

The Application shutdown command is used to exit from the application and close the program correctly.

Unlike as "PC shutdown" command, the workstation is not switched off.

6.3 PC Shutdown

The PC shutdown command is used to exit from the application and to ensure a correct shutdown of the workstation.

CAUTION The Workstation should be switched off by using the commands available into GUI or by means of Windows OS std. procedure.
A power fault or improper shutdown procedure may damage the file system.

6.4 Reactor & PC Shutdown

The reactor & PC Shutdown command is used to switch off the reactor, exit from the application and switch off the workstation correctly.

CAUTION The Workstation should be switched off by using the commands available into GUI or by means of Windows OS std. procedure.
A power fault or improper shutdown procedure may damage the file system.

6.5 Emergency Shutdown

In case of an emergency situation, push one of the two red emergency buttons.
One is located above the clean room loading area, the other at the rear of the reactor above the computer cabinet.

> ⚠ **CAUTION** By pressing either of the emergency buttons, reactor and generator will be switched-off completely, independently of reactor situation and susceptor temperature.

Reactor Emergency Power Off

Activation of the Reactor Emergency Power Off will cause:

A. All power in the reactor is turned off.
B. Nitrogen purge begins (through a normally open valves).
C. Induction coils are no longer energized, because power supply to generator is turned off.
D. Reactor cooling air is turned off.

Activation of Reactor Emergency Power Off button will require manual restarting of the reactor and may damage epi wafers and reactor.

Generator Emergency Power Off

Activation of the Generator Emergency Power Off will cause:

A. Induction coils are no more energized, because power supply to generator is turned off.
B. Reactor power is maintained.
C. Reactor alarm level "H" is usually triggered.
D. Cooling air is maintained.
E. Cooling water is maintained.

6.6 Configuration Parameters

Even if the reactor configuration parameters are saved in the workstation hard disk and in the back-up floppy, it is always advisable save a copy in paper format.

During the reactor start up LPE engineer in cooperation with customer, are completing the Reactor Check List, where there is a section reserved to the reactor configuration parameters. The check list is usually placed in the pocket behind the electronic cabinet door.

Do not forget to keep it always updated !!

Here follow an example of the section reserved to the configuration parameter included in the reactor check list:

CONFIGURATION PARAMETERS

Reactor PE2061S

edited by LPE Engineer

MFC	Range
H2 main - FC1	
H2 purge - FC2	
N2 - FC3	
HCl - FC80 gas etch	
HCl - FC83 susceptor etch	
FC21 (Si) H2 calibration	
FC22 (Si) H2 calibration	
Dope 1 - FC53	
Dope 2 - FC63	
Dope 3 - FC73	
Inject 1 - FC52	
Inject 2 - FC62	
Inject 3 - FC72	
Dilute 1 - FC51	
Dilute 2 - FC61	
Dilute 3 - FC71	

	SiCl4	SiHCl3	SiH2Cl2	MFC
FC21 (Si) H2 calibration	☐	☐	☐	☐
FC22 (Si) H2 calibration	☐	☐	☐	☐

	N	P	N+	P+
Dope 1 - FC53	☐	☐	☐	☐
Dope 2 - FC63	☐	☐	☐	☐
Dope 3 - FC73	☐	☐	☐	☐

EXAMPLE

temperature	station A		station B	
Set point	Power	Real temp.	Power	Real temp
800				
850				
900				
950				
1000				
1050				
1100				
1150				
1200				
1250				
1300				
Pirometer type				
Emissivity set				

CONFIGURATION PARAMETERS

Reactor PE2061S

edited by Customer Engineer

Purge parameters	Time	Flow
Pre N2		
Pre H2		
Post H2		
Post N2		

PE2061S option	Time	Power
Pre H2 Power Stab. Value	\\	
Pre H2 Power Ramp Time		\\

Parameters ☐ min/min ☐ min/sec	Values
Flow & therma switch delay	
Mass flow controllers time out	
Mass flow controllers allowed error	
H2 main set (heat up)	
Ramp time for power	
End value for power ramp	
Ramp timr for tamp heat up	
Vent time	
H2 temp ramp time	
H2 temp stab time	
H2 set (step end)	
Minimum siicon drum weight	

EXAMPLE

Gas inlet pressure (with PTD)	Values
HCl min.	
HCl max.	
Dope 1 min.	
Dope 1 max.	
Dope 2 min.	
Dope 2 max.	
Dope 3 min.	
Dope 3 max.	

PE2061 and PE2061S

Control System Block Diagram

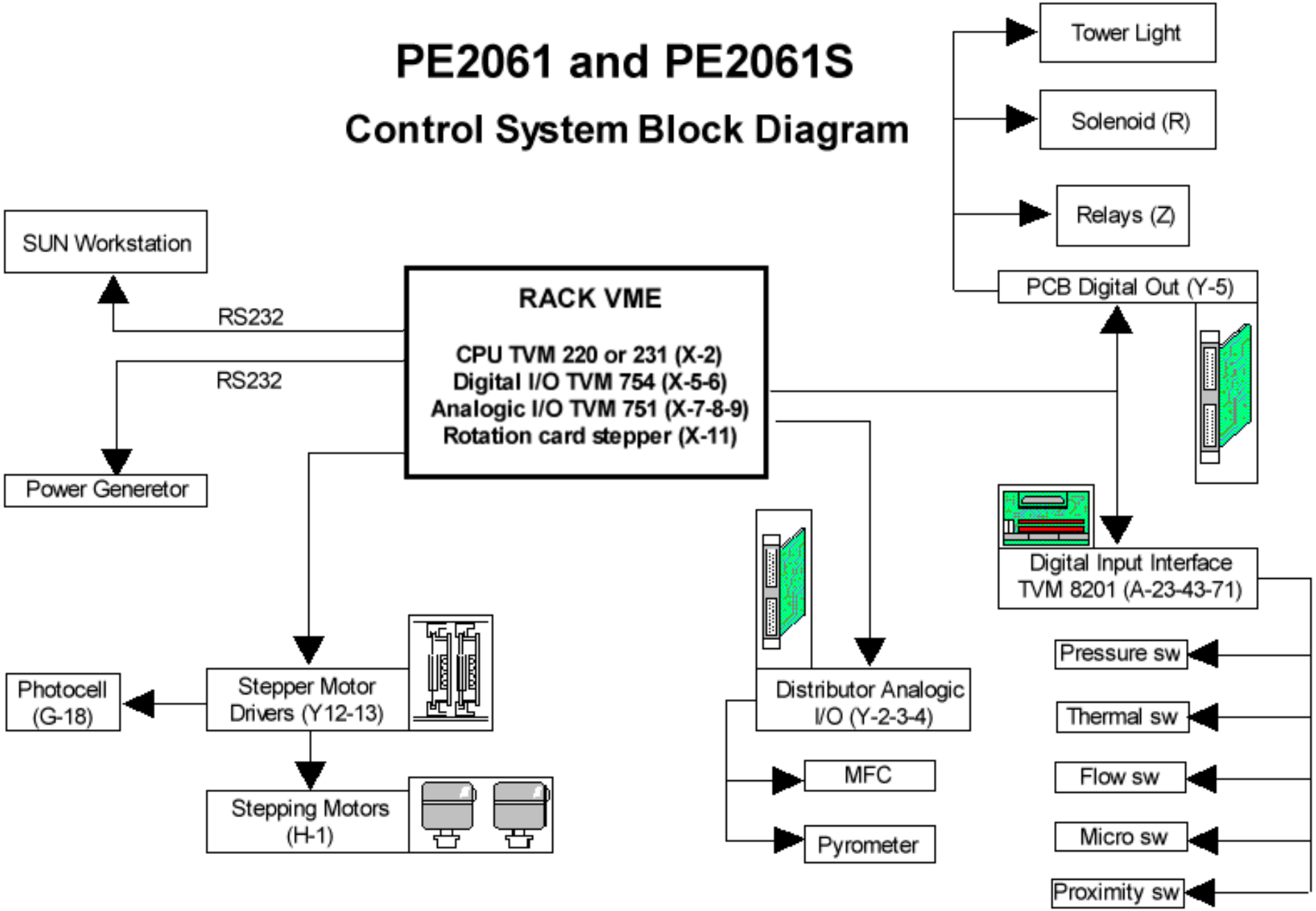

1. PRESSURE SW BELL A/B WARNING

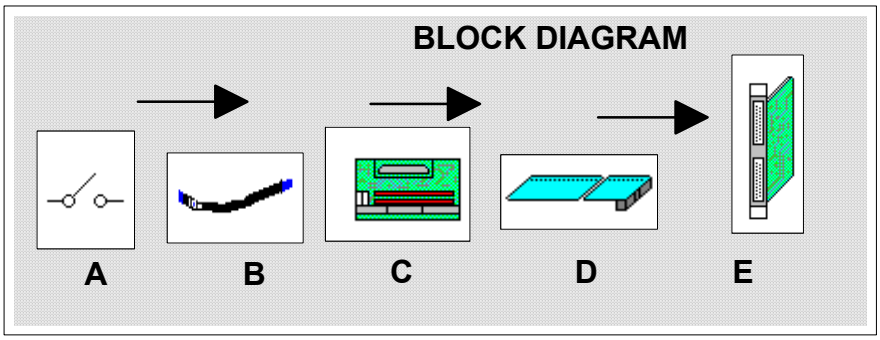

LIST OF ITEMS:

	Side A
A	Pressure SW SQ393H (A-68)
B	Wire 3905 and 3906
C	TVM 8201 AP397C (A-71)
D	Flat cable FC3- 3401 (X-5)
E	TVM 754 (X-5)

	Side B
A	Pressure SW SQ383H (A-9)
B	Wire 3805 and 3806
C	TVM 8201 AP387C (A-43)
D	Flat Cable FC5 – 3403 (X-6)
E	TVM 754 (X-6)

TROUBLE SHOOTING:

Pressure inside bell jar exceeds -5 mbar	TRUE ➡	Check whether the scrubber is on and in good conditions (Pressure inside bell jar should be between -10 and -15 mbar) Check exhaust pipe and valve conditions END
▼ FALSE		
[C] has no power supply or has fuse blown	TRUE ➡	Supply 24V / Replace fuse END
▼ FALSE		
[B] is interrupted or not properly connected	TRUE ➡	Replace [B]/Connect it properly END
▼ FALSE		
[D] is damaged or not properly connected	TRUE ➡	Replace [D] /Connect it properly END
▼ FALSE		
[A]/[E] is probably damaged check and replace it. END		

2. PRESSURE SW BELL A/B ALARM

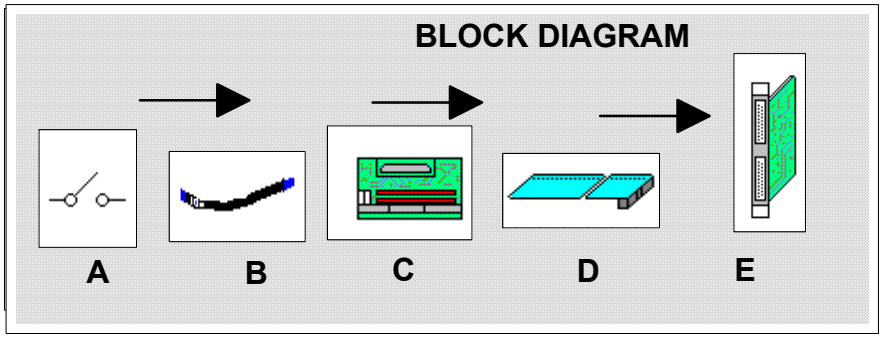

LIST OF ITEMS:

	Side A
A	Pressure SW SQ394H (A-68)
B	Wire 3907 AND 3908 (A-71)
C	TVM 8201 AP397C (A-71)
D	Flat cable FC3 3401 (X-5)
E	TVM 754 (X-5)

	Side B
A	Pressure SW 384H (A-9)
B	Wire 3807 AND 3808 (A-43)
C	TVM 8201 AP 387C (A-43)
D	Flat Cable FC5 3403 (X-6)
E	TVM 754 (X-6)

TROUBLE SHOOTING:

Pressure inside bell jar exceeds -15 mbar	TRUE ➡	Check whether the scrubber is on and in good conditions (Pressure inside bell jar should be between -10 and -15 mBar) Check exhaust pipe and valve conditions END
▼ FALSE		
[C] has no power supply or has fuse blown	TRUE ➡	Supply 24V / Replace fuse END
▼ FALSE		
[B] is interrupted or not properly connected	TRUE ➡	Replace [B]/Connect it properly END
▼ FALSE		
[D] is damaged or not properly connected	TRUE ➡	Replace [D] /Connect it properly END
▼ FALSE		
[A]/[E] is probably damaged check and replace it. END		

3. WATER GROUP THERMAL SWITCHES

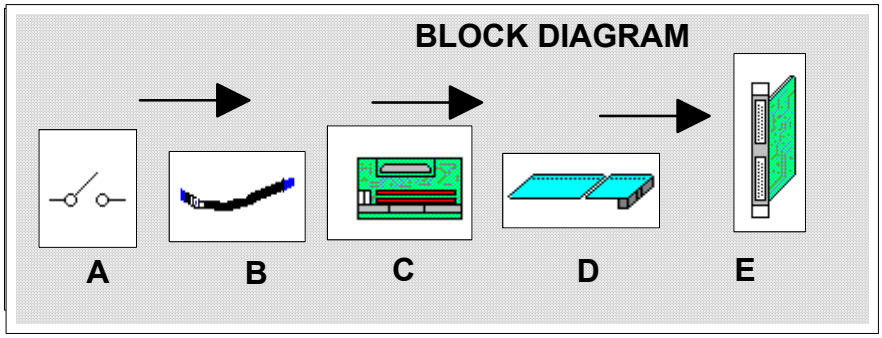

LIST OF ITEMS:

	THERMAL SW PLATE and BELL JAR CAP A
A	Thermal SW SQ394H (T-TA6)
B	Wire 3909 and 3910 (A71)
C	TVM 8201 AP397C (A71)
D	Flat Cable FC3 3401 (X-5)
E	TVM 754 (X-5)

	THERMAL SW PLATE and BELL JAR CAP B
A	Thermal SW SQ396H (T-TA5)
B	Wire 3917 and 3918 (A71)
C	TVM 8201 AP397C (A71)
D	Flat Cable FC3 3401 (X-5)
E	TVM 754 (X-5)

	THERMAL SW COIL A
A	Thermal SW SQ395H (T-TA2)
B	Wire 3913 and 3914 (A71)
C	TVM 8201 AP397C (A71)
D	Flat Cable FC3 3401 (X-5)
E	TVM 754 (X-5)

	THERMAL SW COIL B
A	Thermal SW SQ397H (T-TA1)
B	Wire 3921 and 3922 (A71)
C	TVM 8201 AP397C (A71)
D	Flat Cable FC3 3401 (X-5)
E	TVM 754 (X-5)

	THERMAL SW CAPACITOR
A	Thermal SW SQ399H (T-TA3)
B	Wire 3925 and 3926 (A71)
C	TVM 8201 AP397C (A71)
D	Flat Cable FC3 3401 (X-5)
E	TVM 754 (X-5)

TROUBLE SHOOTING:

The temperature of the cooling water exceeds 60 degrees	TRUE ➡	Check if the cooling water is sufficient (the difference between the inlet and the outlet should be around 2.5 atm) Increase water flow through the proper knob handle. END

▼ FALSE

[C] has no power supply or has fuse blown	TRUE ➡	Supply 24V / Replace fuse END

▼ FALSE

[B] is interrupted or not properly connected	TRUE ➡	Replace [B]/Connect it properly END

▼ FALSE

[D] is damaged or not properly connected	TRUE ➡	Replace [D] /Connect it properly END

▼ FALSE

[A]/[E] is probably damaged check and replace it. END

4. WATER GROUP FLOW SWITCHES

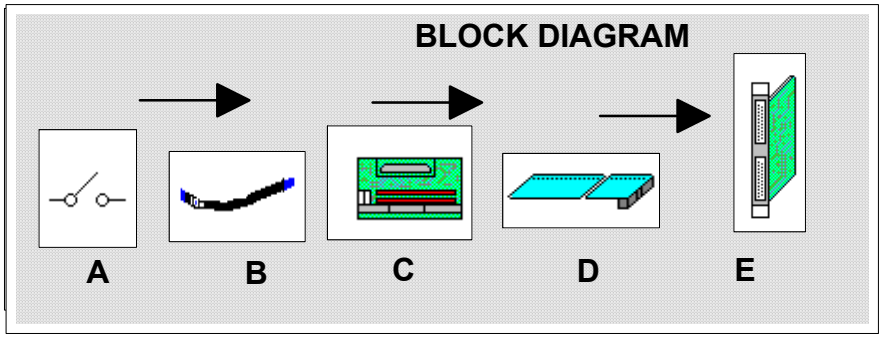

LIST OF ITEMS:

	FLOW SW PLATE and BELL CAP A
A	Flow SW SQ395H (T-FS1) (4 l/min)
B	Wire 3911and 3912 (A71)
C	TVM 8201 AP397C (A71)
D	Flat Cable FC3 3401 (X-5)
E	TVM 754 (X-5)

	FLOW SW PLATE and BELL CAP B
A	Flow SW SQ396H (T-FS2) (4 l/min)
B	Wire 3919 and 3920 (A71)
C	TVM 8201 AP397C (A71)
D	Flat Cable FC3 3401 (X-5)
E	TVM 754 (X-5)

	FLOW SW COIL A
A	Flow SW SQ395H (T-FS5) (19 l/min)
B	Wire 3915 and 3916 (A71)
C	TVM 8201 AP397C (A71)
D	Flat Cable FC3 3401 (X-5)
E	TVM 754 (X-5)

	FLOW SW COIL B
A	Flow SW SQ397H (T-FS6)(19 l/min)
B	Wire 3923 and 3924 (A71)
C	TVM 8201 AP397C (A71)
D	Flat Cable FC3 3401 (X-5)
E	TVM 754 (X-5)

	FLOW SW CAPACITOR
A	Flow SW SQ399H (T-FS4) (4 l/min)
B	Wire 3927 and 3928 (A71)
C	TVM 8201 AP397C (A71)
D	Flat Cable FC3 3401 (X-5)
E	TVM 754 (X-5)

TROUBLE SHOOTING:

The cooling water is not supplied to the reactor.	TRUE ➡	Check if the cooling water is sufficient (the difference between the inlet and the outlet should be around 2.5 atm) Increase water flow though the proper knob handle. END

▼ FALSE

The manual valve is not completely open .	TRUE ➡	Open the manual valve . END

▼ FALSE

The flow sw is not properly mounted. (check arrow on flow sw)	TRUE ➡	Mount flow sw properly. END

▼ FALSE

[C] has no power supply or has fuse blown	TRUE ➡	Supply 24V / Replace fuse END

▼ FALSE

[B] is interrupted or not properly connected	TRUE ➡	Replace [B]/Connect it properly END

▼ FALSE

[D] is damaged or not properly connected	TRUE ➡	Replace [D] /Connect it properly END

▼ FALSE

[A] Is probably durty or damaged.	TRUE ➡	Check and clean or replace it END

▼ FALSE

[E] Probably damaged.
END

5. THERMAL SW AIR

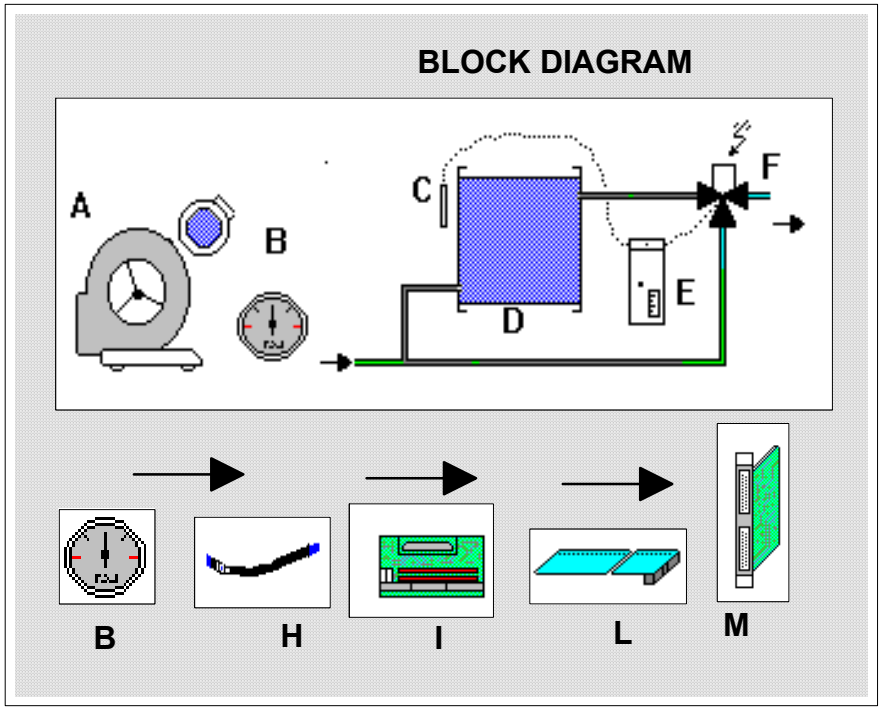

LIST OF ITEMS:

A	Blower & Motor EV0126I (Q-1 & Q-4)
B	Thermal SW SQ3910H (T-TA8)
C	Thermal reg. sensor EH1515H (T-TC1)
D	Heat exchanger (T-AWE1)
E	Thermal regulator FR01511C(T-TR)
F	Modulating valve YV1513H (T-AV)
H	Wire 3929 and 3930 (A-71)
I	TVM 8201 AP397C (A-71)
L	Flat Cable FC3 3401 (X-5)
M	TVM 754 (X-5)

TROUBLE SHOOTING:

The cooling air temperature exceeds max value. (See ENCLOSURE 2)	FALSE ➡	**GO TO R1**

▼ TRUE

Cooling water flowing through [D] is not sufficient. (See Installation table)	TRUE ➡	Supply water to the heat exchanger END

▼ FALSE

Cooling water temperature flowing through [D] exceeds max value (See ENCLOSURE 2)	TRUE ➡	Supply water temperature below max value. END

▼ FALSE

Motor belt [A] is loose or damaged	TRUE ➡	Tighten or replace the belt END

▼ FALSE

Connection between [F] and [E] is interrupted	TRUE ➡	Restore connection END

▼ FALSE

Set [E] in order to achieve the correct air temperature (see ENCLOSURE 1) during typical process. END

R1:

The thermal SW [B] is not properly set. (see ENCLOSURE 1)	TRUE ➡	Set the thermal SW [B] properly. END

▼ FALSE

[I] has no power supply or has fuse blown	TRUE ➡	Supply 24V / Replace fuse END

▼ FALSE

[H] is interrupted or not properly connected	TRUE ➡	Replace [H]/Connect it properly END

▼ FALSE

[L] is damaged or not properly connected	TRUE ➡	Replace [L] /Connect it properly END

▼ FALSE

[B]/[M] is probably damaged check and replace it. END

6. SAFETY SW LIFT A/B PORT

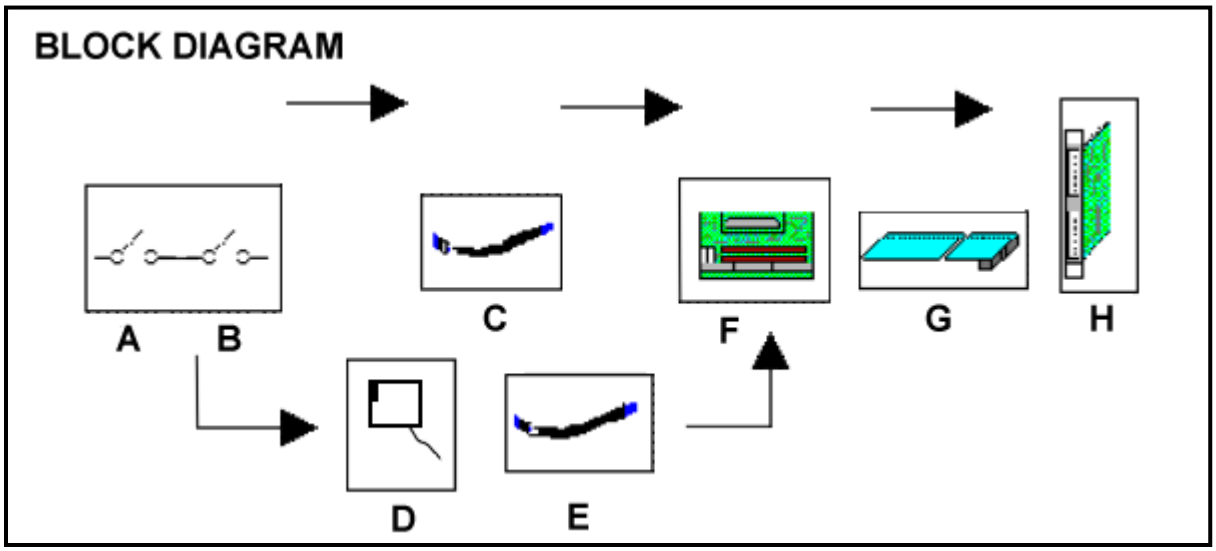

LIST OF ITEMS:

	Side A
A	Micro SW for lift inhibit SQ391H (A-72)
B	Quartz-guard safety photocell SW BF393H
C	Wire 3901 and 3904 (A-71)
D	Quartz-guard safety photocell BF393H (A-74)
E	Wire 3902 and 3903 (A-71)
F	TVM 8201 AP397C (A-71)
G	Flat Cable FC3 3401(X-5)
H	TVM 754 (X-5)

	Side B
A	Micro SW for lift inhibit SQ381H (A-27)
B	Quartz-guard safety photocell SW BF383H
C	Wire 3801 and 3804 (A-43)
D	Quartz-guard safety photocell BF383H (A-74)
E	Wire 3802 and 3803 (A-43)
F	TVM 8201 AP387C (A-43)
G	Flat Cable FC5 3403 (X-6)
H	TVM 754 (X-6)

TROUBLE SHOOTING:

Safety lift port is open	TRUE ➡	Close the lift door. END
▼ FALSE		
The quartz –guard shield is out side the table	TRUE ➡	Pull in the quartz-guard shield END
▼ FALSE		
The loading table is outside of the Reactor	TRUE ➡	Put in the loading table END
▼ FALSE		
[F] has no power supply or has fuse blown	TRUE ➡	Supply 24V / Replace fuse END
▼ FALSE		
[C] is interrupted or not properly connected	TRUE ➡	Replace [C]/Connect it properly END
▼ FALSE		
[E] is interrupted or not properly connected	TRUE ➡	Replace [E]/Connect it properly END
▼ FALSE		
[A] is not properly mounted and does not detect the door closed or is damaged .	TRUE ➡	Replace/mount properly [A] END
▼ FALSE		
[D] is not properly mounted and does not detect the quartz guard shield	TRUE ➡	Replace/mount properly / Adjust photocell sensibility [D] END
▼ FALSE		

[F/H] is probably damaged . Check and replace it END

7. H2 LEAK WARNING1/2

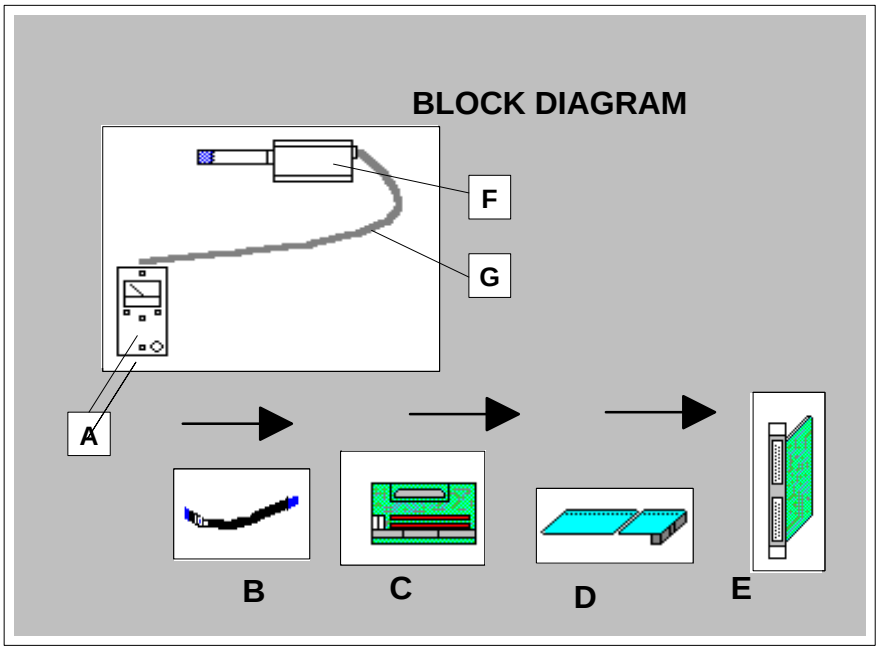

LIST OF ITEMS:

	Reactor
A	H2 Detector AP243E (Y-9)
B	Wire 2401 and 2402 (A-23)
C	TVM 8201 AP367C (A-23)
D	Flat cable FC4 3402 (X-5)
E	TVM 754 (X-5)
F	H2 Leak sensing head (A-97)
G	Wire 2406 ,2407 and 2408

	Gas panel
A	H2 Detector AP249E (Y-10)
B	Wire 2410 and 2411 (A-23)
C	TVM 8201 AP367C (A-23)
D	Flat cable FC4 3402 (X-5)
E	TVM 754 (X-5)
F	H2 Leak sensing Head (P-HS)
G	Wire 2415,2416 and 2417

TROUBLE SHOOTING:

[A] Indicating warning/alarm status	TRUE ➡	**GO TO R1**

▼ FALSE

[C] has no power supply or has fuse blown	TRUE ➡	Supply 24V / Replace fuse END

▼ FALSE

[B] is interrupted or not properly connected	TRUE ➡	Replace [B]/Connect it properly END

▼ FALSE

[D] is damaged or not properly connected	TRUE ➡	Replace [D] /Connect it properly END

▼ FALSE

[G]/[D]/[F] is damaged or not properly connected	TRUE ➡	Replace [G] /Connect it properly END

▼ FALSE

[A] or [E] are probably damaged check and replace
END

R1:

H2 Leak from reactor

H2 Leak from gray area.

[A] out of calibration

8. H2 LEAK ALARM 1/2

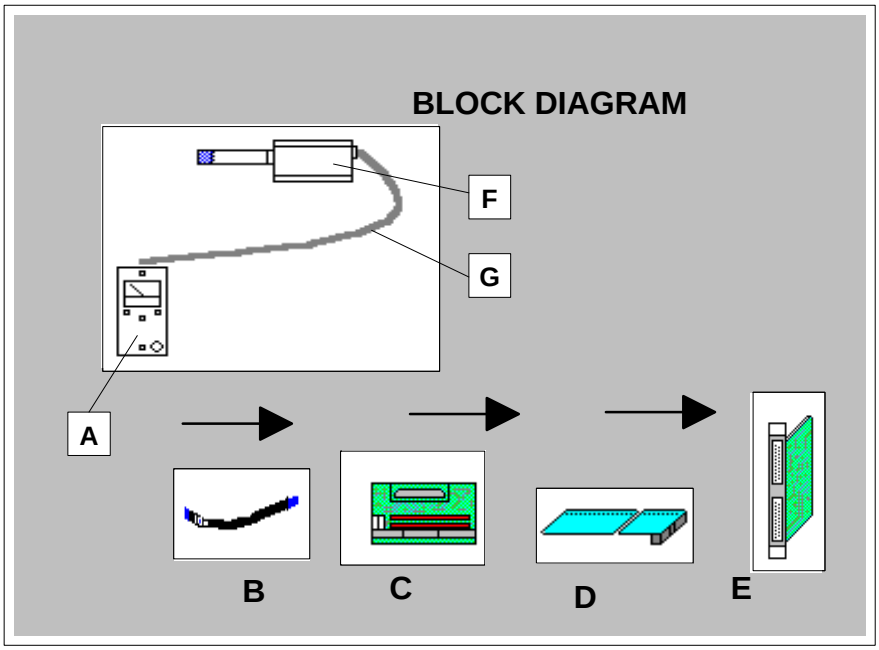

LIST OF ITEMS:

	Reactor
A	H2 Detector AP243E (Y-9)
B	Wire 2403 and 2404 (A-23)
C	TVM 8201 AP367C (A-23)
D	Flat cable FC4 3402 (X-5)
E	TVM 754 (X-5)
F	H2 Leak sensing head (A-97)
G	Wire 2406,2407 and 2408

	Gas panel
A	H2 Detector AP249E (Y-10)
B	Wire 2412 and 2413 (A-23)
C	TVM 8201 AP367C (A-23)
D	Flat cable FC4 3402 (X-5)
E	TVM 754 (X-5)
F	H2 Leak sensing Head (P-HS)
G	Wire 2415,2416 and 2417

TROUBLE SHOOTING:

[A] Indicating warning/alarm status	TRUE ➡	**GO TO R1**

▼ FALSE

[C] has no power supply or has fuse blown	TRUE ➡	Supply 24V / Replace fuse END

▼ FALSE

[B] is interrupted or not properly connected	TRUE ➡	Replace [B]/Connect it properly END

▼ FALSE

[D] is damaged or not properly connected	TRUE ➡	Replace [D] /Connect it properly END

▼ FALSE

[G]/[D]/[F] is damaged or not properly connected	TRUE ➡	Replace [G] /Connect it properly END

▼ FALSE

[A] or [E] are probably damaged check and replace
END

R1:

H2 Leak from reactor

H2 Leak from gray area.

[A] out of calibration

9. CLAMP OPEN/CLOSED

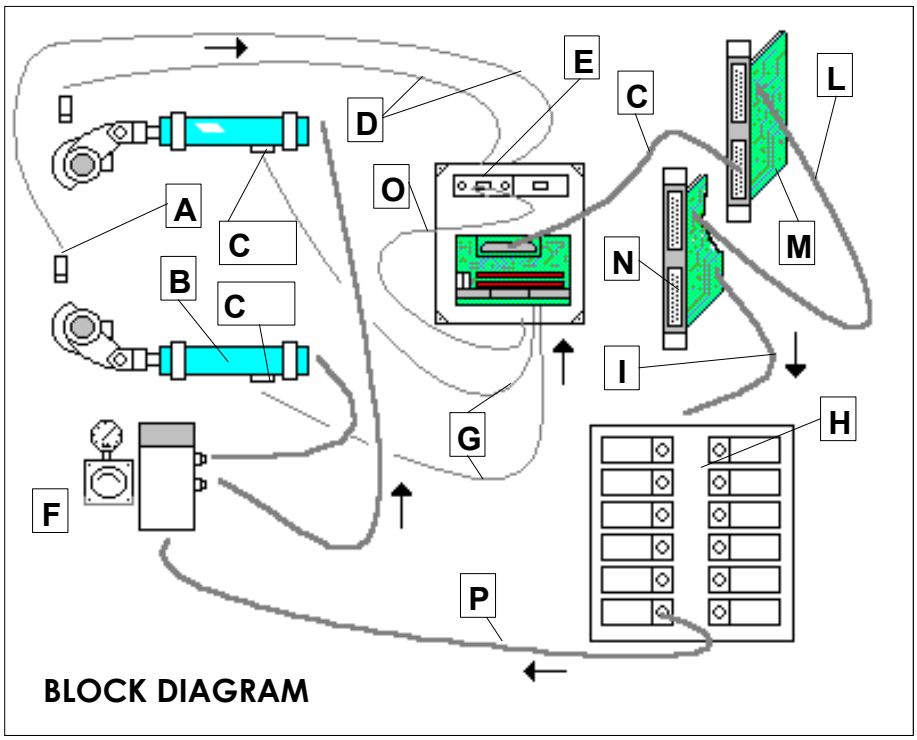

	LIST OF ITEMS
	Side A
A	Limit SW clamp a close AP407H and AP402H (B-10)
B	Cylinder (B-12)
C int	Limit SW clamp open BQ0335D (B-13)
C ext	Limit SW clamp open BQ0338D (B-13)
D	Wires 4003 and 4004 (AP402H) & 4007 and 4008 (AP407H) (A-71)
E	Clamp preamplifier AP404I (A-49)
F	Pressure regulator (B-20)
G	Wires 3937,3938 and 3306 (int) & Wires 3939,3940 and 3307(ext) (A-71)
H	Solenoid valve group AP288G (R)
I	FC 19 2002 (R)
L	Flat cable FC18 2013 (R)
M	TVM 754 (X-5)
N	Digital out board XP0202G (Y-5)
O	Wire 3941 and 3942 (A-71)
P	EVCA pipe

	LIST OF ITEMS
	Side B
A	Limit SW clamp a close AP407C and AP402C (B-10)
B	Cylinder (B-12)
C int	Limit SW clamp open BQ03213D (B-13)
C ext	Limit SW clamp open BQ03215D (B-13)
D	Wires 4001 and 4002 (AP402C) & 4005 and 4006 (AP407C) (A-43)
E	Clamp preamplifier AP404D (A-49)
F	Pressure regulator (B-20)
G	Wires 3860,3861and 3224 (int) & Wires 3862,3863 and 3225(ext) (A-71)
H	Solenoid valve group AP288G (R)
I	FC 19 2002 (R)
L	Flat cable FC18 2013 (R)
M	TVM 754 (X-5)
N	Digital out board XP0202G (Y-5)
O	Wire 3864 and 3865 (A-71)
P	EVCB pipe

TROUBLE SHOOTING:
CLAMP CLOSED (int & est)

[F] Is not set properly. (See ENCLOSURE 1)	TRUE ➨	Set [F] properly. END
▼ FALSE		
Compressed air is not properly supply to the reactor. (See ENCLOSURE 2)	TRUE ➨	Supply compressed air properly. END
▼ FALSE		
The solenoid valve [H] operating through [P] is on.	TRUE ➨	**GO TO R1**
▼ FALSE		
[I] is interrupted or not properly connected	TRUE ➨	Replace [I] or connect it properly. END
▼ FALSE		
[N] has no power supply or has fuse blown.	TRUE ➨	Check 24V power supply status and power connections. Replace fuse. END
▼ FALSE		
[L] is interrupted or not properly connected.	TRUE ➨	Replace [L]/connect it properly. END
▼ FALSE		
[M] or [H] are damaged . In case the misfunction involves several solenoid valves replace [N] first.	TRUE ➨	Replace [M/H] / Connect it properly
▼ FALSE		

R1

[D] is damaged or not properly connected.	TRUE ➨	Replace [F]/Connect it properly. END
▼ FALSE		
[E] is damaged.	TRUE ➨	Replace [E]

END

▼ FALSE

[O] is damaged or not properly connected.

TRUE ➡ Replace [O]/Connect it properly. END

▼ FALSE

[C] is damaged or not properly connected

TRUE ➡ Replace [C]/Connect it properly. END

▼ FALSE

Check :
1) Compressed air pressure
The operating pressure is 6 Bars.
2)Compressed air pressure at the and of [F] (It might be insufficient in case of compressed air leak inside [H] or in [P].
3)[B] Conditions
END

10. LIFT TROUBLE

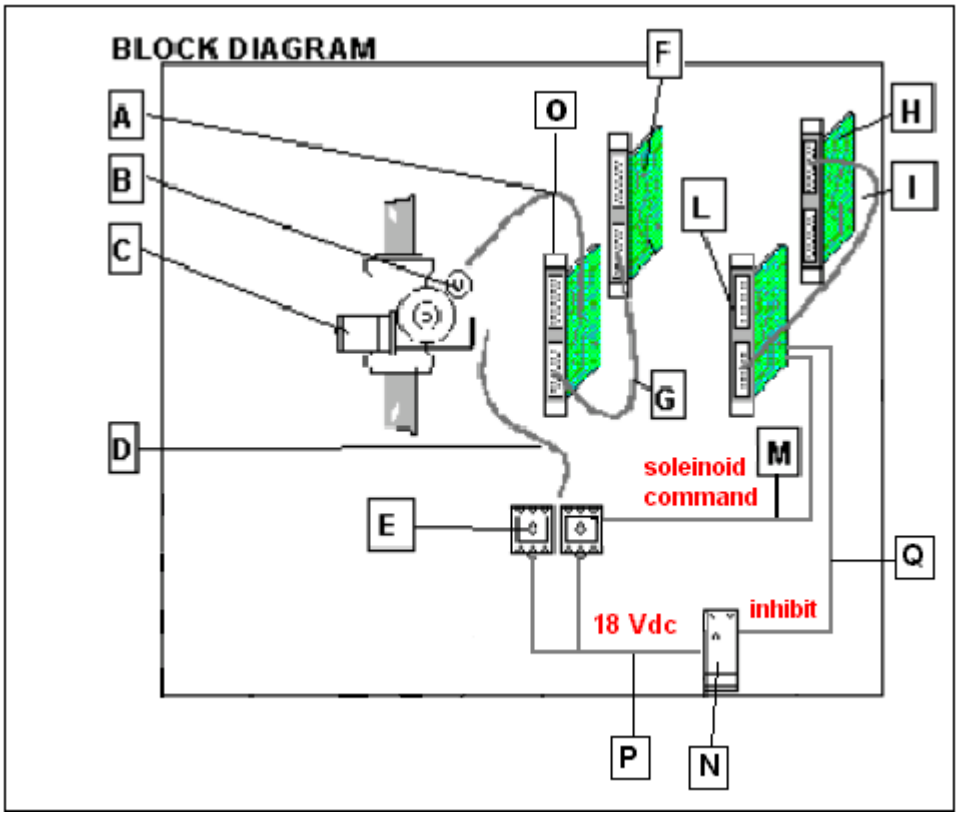

LIST OF ITEMS

	Side A		Side B
A	Wires 1903,1904 and 1905	**A**	Wires 1906,1907 and 1908
B	Potentiometer RP0316I (F-57)	**B**	Potentiometer RP0319I (F-57)
C	Motor MD0317H (F-50)	**C**	Motor MD03110H (F-50)
D	Wires 3110 and 3113	**D**	Wires 3129 and 3130
E	Relay Octal KUA (KA0306H) & KDA (KA0307H)	**E**	Relay Octal KUB (KA0309H) & KDB (KA03010H)
F	TVM 751 (X-9)	**F**	TVM 751 (X-9)
G	Flat cable FC8 1901(Y-4)	**G**	Flat cable FC8 1901(Y-4)
H	TVM 754 (X-6)	**H**	TVM 754 (X-6)
I	Flat Cable FC17 2008(X-6)	**I**	Flat Cable FC17 2008 (X-6)
L	Digital outputs board XP0202G (Y-5)	**L**	Digital outputs board XP0202G (Y-5)
M	Wires 3004 (KUA) & 3005 (KDA)	**M**	Wires 3006 (KUB) & 3007 (KDB)
N	Power Supply (18VDC) (Y-15)	**N**	Power Supply (18VDC) (Y-15)
O	Analog Distributor I/O AP195F (Y-3)	**O**	Analog Distributor I/O AP195F (Y-3)
P	Wires 2701 & 2702	**P**	Wires 2701 & 2702
Q	18 Vdc Power Supply Inhibit wire 2007 & 2018	**Q**	18 Vdc Power Supply Inhibit wire 2007 & 2018

TROUBLE SHOOTING

[C] has not power supply	TRUE ➡	Check [C] connect it properly END
▼ FALSE		
[D] is interrupted or not properly connected	TRUE ➡	Check [D] connect it properly END
▼ FALSE		
[E] contact is not properly connected	TRUE ➡	Check [E] connect it properly END
▼ FALSE		
[E] coil is not properly connected	TRUE ➡	Check [E] connect it properly/ replace it END
▼ FALSE		
[M] is interrupted or not properly connected	TRUE ➡	Check [M] connect it properly END
▼ FALSE		
[P] is interrupted or not properly connected	TRUE ➡	Check [P] connect it properly END
▼ FALSE		
[N] is not giving the 18Vdc to the lift	TRUE ➡	Check [N] protection fuse Check [N] power supply line END
▼ FALSE		
[Q] is interrupted or not properly connected	TRUE ➡	Check [Q] connect it properly END
▼ FALSE		
[L] is not properly connected or is damaged	TRUE ➡	Check [L] connect it properly END
▼ FALSE		
[I] is interrupted or not properly connected	TRUE ➡	Check [I] connect it properly END
▼ FALSE		

[H] is not properly connected or is damaged	TRUE ➡	Check [H] connect it properly/ replace it END

▼ FALSE

[C] moves but there is not potentiometer feed-back signal

▼ TRUE

[B] is not properly connected or is damaged	TRUE ➡	Check [H] connect it properly / replace it END

▼ FALSE

[A] is interrupted or not properly connected	TRUE ➡	Check [A] connect it properly END

▼ FALSE

[O] has not power supply	TRUE ➡	Check [O] power supply +24 Vdc +15 Vdc -15 Vdc

▼ FALSE

[O] is not properly connected or is damaged	TRUE ➡	Check [O] connect it properly / replace it END

▼ FALSE

[G] is interrupted or not properly connected	TRUE ➡	Check [G] connect it properly END

▼ FALSE

[F] is not properly connected or is damaged	TRUE ➡	Check [F] connect it properly/ replace it END

▼ FALSE

[C] Has 18Vdc power supply.	TRUE ➡	[C] Has mechanical problem .

▼ FALSE

Start from the beginning.

This page has been intentionally left blank

11. BLOWER MOTOR THERMAL SW

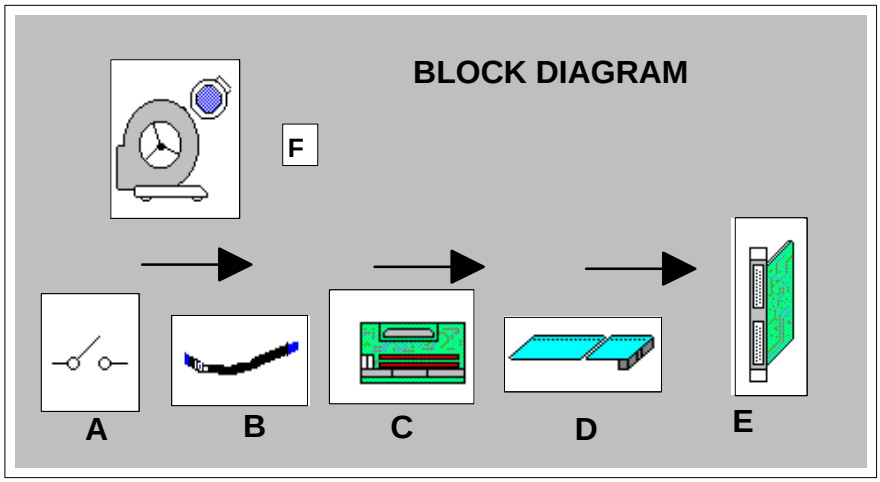

LIST OF ITEMS:

A	Blower motor thermal SW QM126D (Z-5)
B	Wires 1202 and 1203 (A-23)
C	TVM 8201AP367C (A-23)
D	Flat cable FC4 3402(X-5)
E	TVM 754 (X-5)
F	Blower motor EV0126I (Q-1 & Q-4)

TROUBLE SHOOTING:

[A] is not set properly (See ENCLOSURE 1)	TRUE ➡	Set [A] properly END
▼ FALSE		
[F] absorption exceeds 10 A (Measure the three phases using an ammeter)	TRUE ➡	[F] probably damaged Check and replace it. END
▼ FALSE		
Three phase power supply has phase problem	TRUE ➡	Supply Three Phase power properly END
▼ FALSE		
[C] has no power supply or has fuse blown	TRUE ➡	Supply 24V / Replace fuse END
▼ FALSE		
[B] is interrupted or not properly connected	TRUE ➡	Replace [B]/Connect it properly END
▼ FALSE		
[D] is damaged or not properly connected	TRUE ➡	Replace [D] /Connect it properly END
▼ FALSE		
[A]/[F] is probably damaged check and replace it. END		

12. LAMINAR FLOW

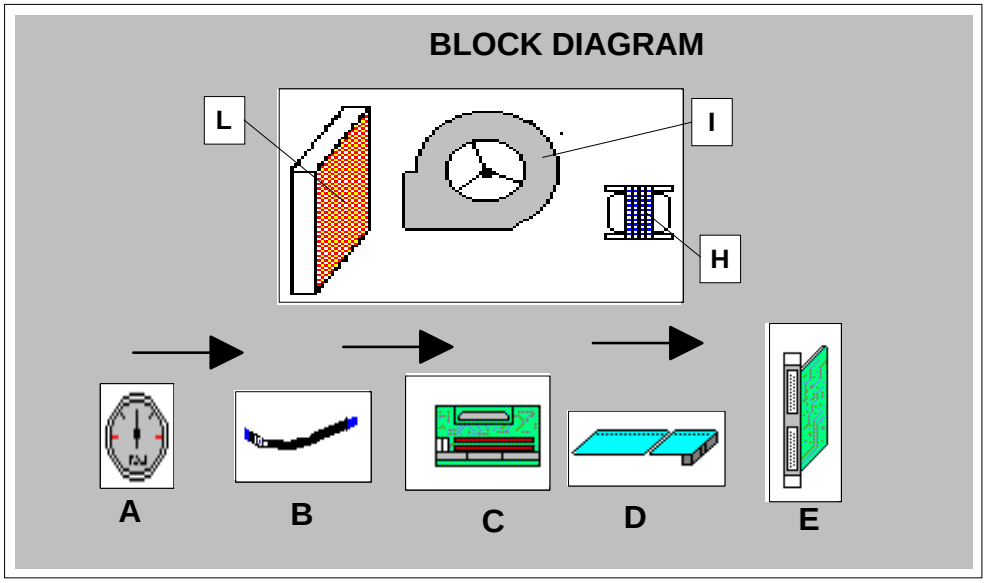

LIST OF ITEMS:

A	Pressure SW laminar flow SQ365H (Q-28)
B	Wires 3601 and 3602 (A-23)
C	TVM 8201 AP367C (A-23)
D	Flat Cable FC4 3402(A-23)
E	TVM 754 (X-5)
H	Speed regulator U01210H(A-25)
I	Blower motor EV01210I(A-24)
L	Absolute Filter (Q-17)

TROUBLE SHOOTING:

[I] is off.	TRUE ➡	Switch it on END
▼ FALSE		
[I] is damaged	TRUE ➡	Replace [I] END
▼ FALSE		
[H] is damaged or is not properly set (the speed as to be increase as laminar flow filter gets dirty)	TRUE ➡	Replace [H]/Set it properly END
▼ FALSE		
[H] Has no power supply	TRUE ➡	Supply power to [H] END
▼ FALSE		
[A] is not set at according to ENCLOSURE 2	TRUE ➡	Set [A] properly . END
▼ FALSE		
[B] is interrupted or not properly connected	TRUE ➡	Replace [B]/Connect it properly END
▼ FALSE		
[C] is damaged or not properly connected	TRUE ➡	Replace [C] /Connect it properly END
▼ FALSE		
[D] is interrupted or not properly connected	TRUE ➡	Replace [D]/Connect it properly END
▼ FALSE		
[E] is damaged.	TRUE ➡	Replace [E] END
▼ FALSE		
[A] Is probably damaged check and replace it. END		

13. EXHAUST AIR VACUUM SW

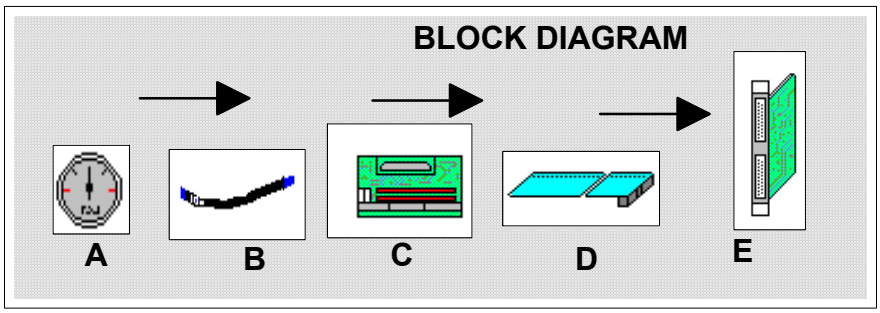

LIST OF ITEMS:

A	Exhaust air Vacuum press SW SQ366H (Q-27)
B	Wires 3605 and 3606 (A-23)
C	TVM 8201 AP367C (A-23)
D	Flat cable FC4 3402 (X-5)
E	TVM 754 (X-5)

TROUBLE SHOOTING:

Exhaust suction is turned off or does not reach the required value . (See ENCLOSURE 2)	TRUE ➡	Supply proper suction to the reactor . END

▼ FAI SF

[A] in not set at the proper value. (See ENCLOSURE 1)	TRUE ➡	Set [A] at -1mBar END

▼ FAI SF

[C] has no power supply or has fuse blown	TRUE ➡	Supply 24V / Replace fuse END

▼ FAI SF

[B] is interrupted or not properly connected	TRUE ➡	Replace [B]/Connect it properly END

▼ FAI SF

[D] is damaged or not properly connected	TRUE ➡	Replace [D] /Connect it properly END

▼ FAI SF

[A]/[E] is probably damaged check and replace it. END

14. THERMAL SW COMPUTER AIR

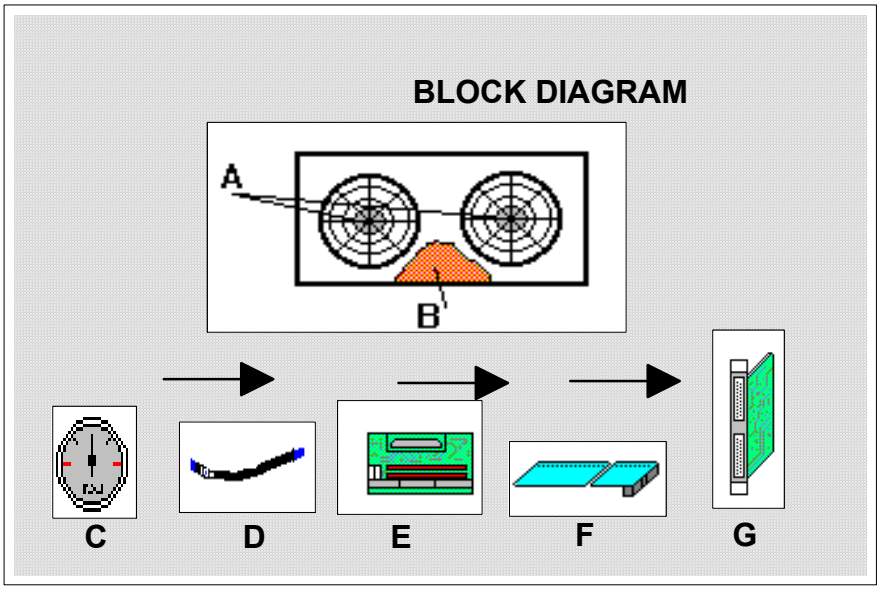

LIST OF ITEMS:

A	Fans EV0146I (A-82)
B	Heat Exchanger (T-AWE2)
C	Thermal SW SQ366H(A-85)
D	Wires 3607 and 3608 (A-23)
E	TVM 8201AP367C (A-23)
D	Flat cable FC4 3402 (X-5)
E	TVM 754 (X-5)

TROUBLE SHOOTING:

Temperature of cooling air in the computer cabinet exceeds the proper value. (See ENCLOSURE 1)	TRUE ➡	Check whether the cooling water is supplied to [B]. Make sure [A] fans are working. Increase water flow trough knob handle. END
▼ FALSE		
[C] is not set at 40 degrees	TRUE ➡	Set [C] at 40 degrees END
▼ FALSE		
[E] has no power supply or has fuse blown	TRUE ➡	Supply 24V / Replace fuse END
▼ FALSE		
[D] is interrupted or not properly connected	TRUE ➡	Replace [D]/Connect it properly END
▼ FALSE		
[F] is damaged or not properly connected	TRUE ➡	Replace [F] /Connect it properly END
▼ FALSE		
[C]/[G] is probably damaged check and replace it. END		

15. LEAK TEST A/B

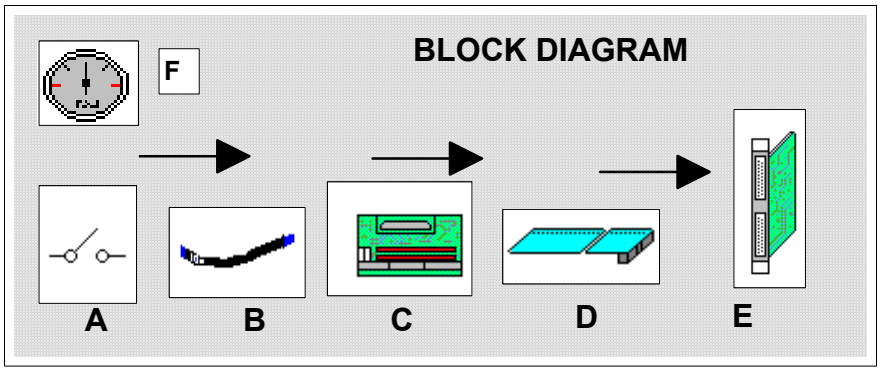

LIST OF ITEMS:

	Side A
A	Vacuum SW SQ367H(S-VSA)
B	Wires 3609 and 3610 (A-23)
C	TVM 8201 AP367C (A-23)
D	Flat cable FC4 3402 (X-5)
E	TVM 754 (X-5)
F	Vacuum gauge (S-VGA)

	Side B
A	Vacuum SW SQ367H (S-VSB)
B	Wires 3614 and 3615 (A-23)
C	TVM 8201 AP367C (A-23)
D	Flat cable FC4 3402 (X-5)
E	TVM 754 (X-5)
F	Vacuum gauge (S-VGB)

TROUBLE SHOOTING:

Vacuum indicated on [F] lower then set point (See ENCLOSURE 1)	TRUE ➡	Check O-Ring conditions Make sure the vacuum pump (S-VP) is working . Check if there are parts (pieces of wafer) lying on the O-rings. END

▼ FALSE

[A] Set point not correct. (See ENCLOSURE 1)	TRUE ➡	Set [A] properly. END

▼ FALSE

[C] has no power supply or has fuse blown.	TRUE ➡	Supply 24V / Replace fuse END

▼ FALSE

[B] is interrupted or not properly connected	TRUE ➡	Replace [B]/Connect it properly END

▼ FALSE

[D] is damaged or not properly connected	TRUE ➡	Replace [D] /Connect it properly END

▼ FALSE

[A]/[E] is probably damaged check and replace it.
END

16. SAFETY SW COMPUTER PORT

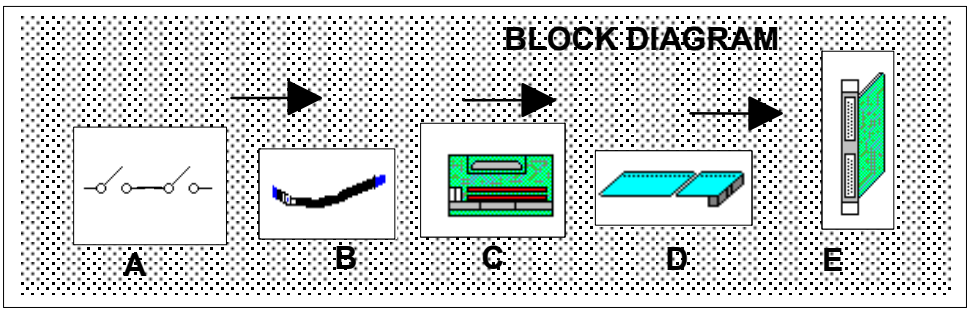

LIST OF ITEMS:

A	Micro SW SQ0368land SQ367H (A-99 & A-21)
B	Wires 3611,3612 and 3613 (A-23)
C	TVM 8201 AP367C (A-23)
D	Flat cable FC4 3402 (X-5)
E	TVM 754 (X-5)

TROUBLE SHOOTING:

Front computer port and/or main switch port is open	TRUE ➡	Close the/both port . END
▼ FALSE		
[C] has no power supply or has fuse blown	TRUE ➡	Supply 24V / Replace fuse END
▼ FALSE		
[B] is interrupted or not properly connected	TRUE ➡	Replace [B]/Connect it properly END
▼ FALSE		
[D] is damaged or not properly connected	TRUE ➡	Replace [D] /Connect it properly END
▼ FALSE		
[A]/[E] not properly mounted and does not detect the door closed or is damaged. Check and replace it END		

17. PRESSURE SW COMPRESSED AIR

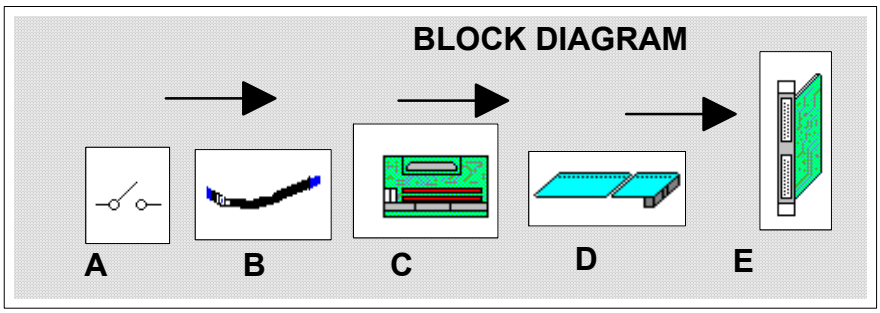

LIST OF ITEMS:

A	Pressure SW SQ384H (G-4)
B	Wires 3809 and 3810 (A-43)
C	TVM 8201 AP387C (A-43)
D	Flat cable FC5 3403 (X-6)
E	TVM 754 (X-6)

TROUBLE SHOOTING:

No compressed air supplied to reactor (See ENCLOSURE 2)	TRUE ➡	Supply compressed air to the reactor END

▼ FALSE

There is a leak in the compressed air circuit.	TRUE ➡	Fix the compressed air circuit END

▼ FALSE

[C] has no power supply or has fuse blown	TRUE ➡	Supply 24V / Replace fuse END

▼ FALSE

[B] is interrupted or not properly connected	TRUE ➡	Replace [B]/Connect it properly END

▼ FALSE

[D] is damaged or not properly connected	TRUE ➡	Replace [D] /Connect it properly END

▼ FALSE

[A]/[E] is probably damaged check and replace it. END

18. BUBBLER 1/2/3 ALARM

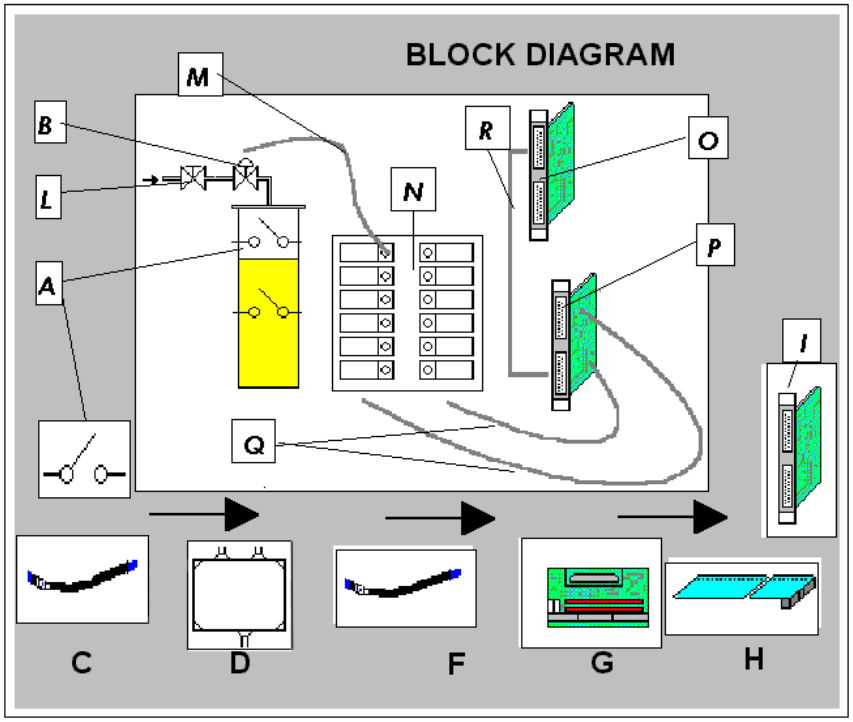

LIST OF ITEMS:

A	Proximity SW
B	Refilling valve (VBBL)
C	Wires to reactor 3854 and 3814 (bubbler 1) & Wires 3855 and 3812 (bubbler 2)
D	Box for internal/external service (A-105)
F1	Wire 3812 and 3814 (A-43)
F2	Wires 3811 and 3813 (A-43)
G	TVM 8201 AP387C (A-43)
H	Flat cable FC5 3403 (A-43)
I	TVM 754 (X-6)
L	Manual valve (VB3)
M	Pneumatic hose
N	Solenoid valve group AP288G (R)
O	TVM 754 (X-5)
P	PCB Digital out XP0202G (Y-5)
Q	Flat cables FC19 2002 & FC20 2013 (Y-5)
R	Flat cable FC18 2006 (X-5)
S1/S2	Proximity SW Level Bubbler 1/2

TROUBLE SHOOTING:

[B] is OFF	TRUE ➡	**GO TO R1**
▼ FALSE		
The solenoid valve operating [B] through [M] is ON.	TRUE ➡	**GO TO R3**
▼ FALSE		
[M] does not connect [B] to the relevant solenoid valve [N]	TRUE ➡	Connect [M] properly END
▼ FALSE		
The solenoid valve operating [B] is damaged.	TRUE ➡	Replace it END
▼ FALSE		
R2		
F1/F2 Interrupted or not properly damaged.	TRUE ➡	Connect F1/F2 properly. END
▼ FALSE		
R5		
[G] has no power supply or has fuse blown	TRUE ➡	Supply 24V / Replace fuse END
▼ FALSE		
[C] is interrupted or not properly connected	TRUE ➡	Replace [C]/Connect it properly END
▼ FALSE		
Check inside [D] . Wires are not properly connected.	TRUE ➡	Connect wires properly. END
▼ FALSE		
[H] is interrupted or not properly connected	TRUE ➡	Replace [H]/Connect it properly END
▼ FALSE		
[A]/[I] Probably damaged check and replace it END		

R3

[Q] Is not properly connected → TRUE ➡ Replace [Q] connect it properly END

▼ FALSE

[R] Is not properly connected. → TRUE ➡ Replace [R] connect it properly END

▼ FALSE

[O] Probably damaged Check and replace it

▼ FALSE

[P] Probably damaged Check and replace it

▼ FALSE

GO TO R5

R1

S1/S2 Does not show level status. → TRUE ➡ Replace S1/S2 END

▼ FALSE

[B] Is damaged → TRUE ➡ Replace [B] END

▼ FALSE

GO TO R2

R4

[F] Interrupted or not properly connected. → TRUE ➡ Replace [F] END

▼ FALSE

GO TO R5

19. COOLING AIR PRESSURE SWITCH

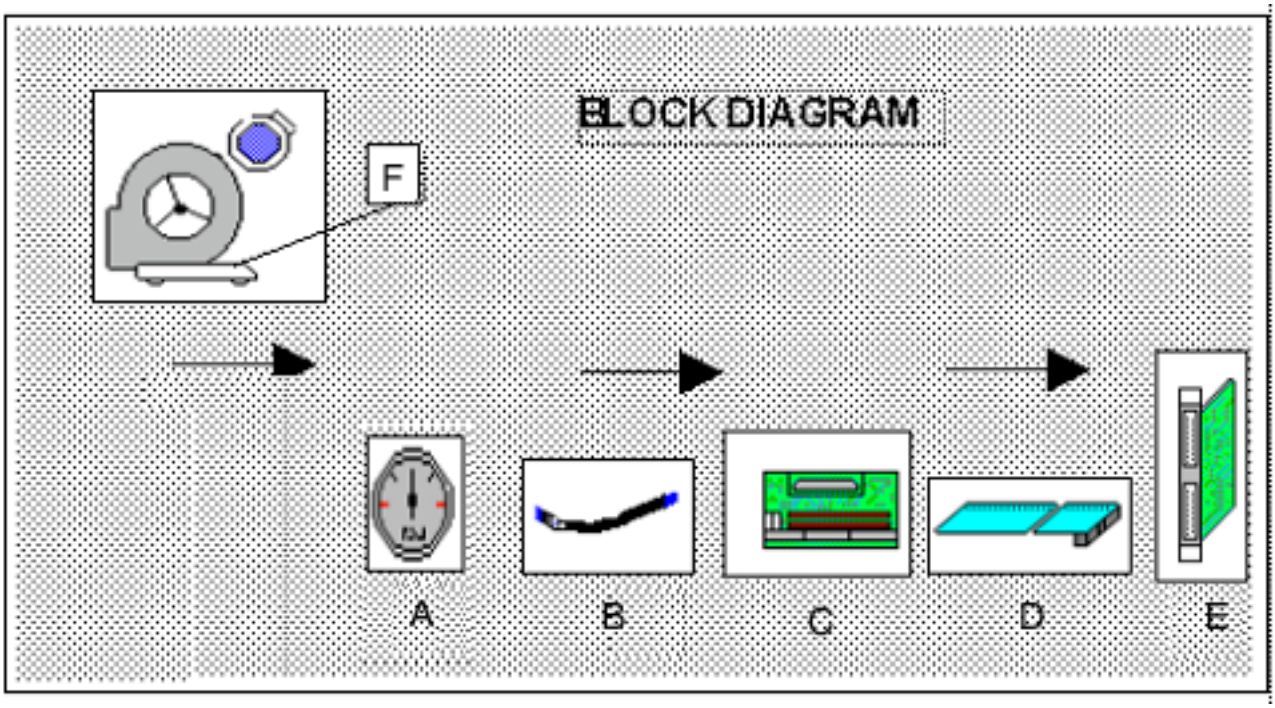

LIST OF ITEMS:

A	Air flow sensor SQ385H (Q-26)
B	Wires 3815 and 3816 (A-43)
C	TVM 8201AP387C (A-43)
D	Flat Cable FC5 3403 (X-6)
E	TVM 754 (X-6)
F	Blower motor EV0126I (Q-1 & Q-4)

TROUBLE SHOOTING:

[F] is off.	TRUE ➡	Switch it on END
▼ FALSE		
[F] is damaged	TRUE ➡	Replace [F] END
▼ FALSE		
Motor belt [F] is slipping or damaged.	TRUE ➡	Tighten or replace the belt. END
▼ FALSE		
[A] is not set between 2 and 3 mbar.	TRUE ➡	Set [A] properly . END
▼ FALSE		
[B] has no power supply or has fuse blown	TRUE ➡	Supply 24V/Replace fuse END
▼ FALSE		
Reactor panels not properly closed	TRUE ➡	Close them properly END
▼ FALSE		
[B] is interrupted or not properly connected	TRUE ➡	Replace [B]/Connect it properly END
▼ FALSE		
[C] has no power supply Or has fuse blown	TRUE ➡	Supply 24V/ Replace fuse END
▼ FALSE		
[D] is damaged or not properly connected	TRUE ➡	Replace [D] /Connect it properly END
▼ FALSE		
[A/E/G] Is probably damaged check and replace it. END		

20. SCRUBBER TROUBLE

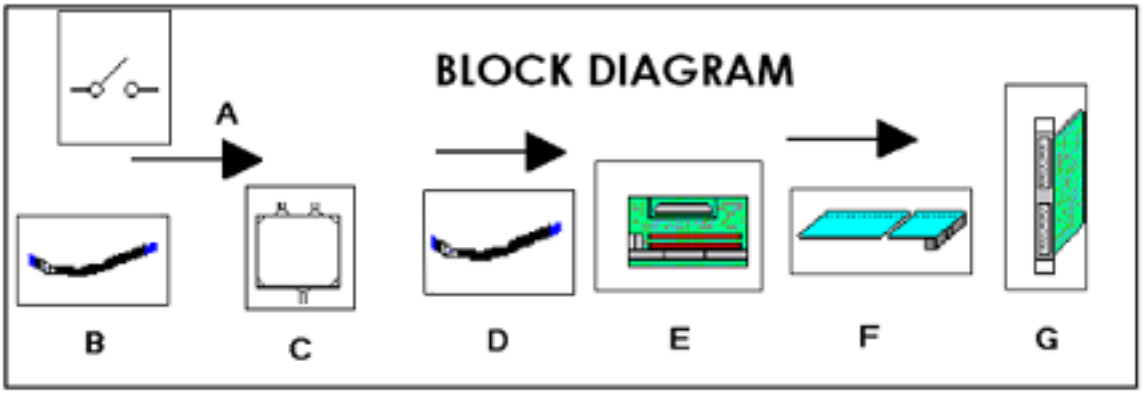

LIST OF ITEMS:

A	Scrubber contact
B	Wire from scrubber
C	Box for internal/external service (A-105)
D	Wire s 3818 and 3820 & wires 3817 and 3819 (A-96)
E	TVM 8201 AP387C (A-43)
F	Flat Cable FC5 3403(X-6)
G	TVM 754 (X-6)

TROUBLE SHOOTING:

The scrubber is OFF.	TRUE ➡	Turn the scrubber ON. END

▼ FALSE

[A] contact is open.	TRUE ➡	Replace [A]. END

▼ FALSE

[B] is interrupted or not properly connected	TRUE ➡	Replace [B]/Connect it properly END

▼ FALSE

Check inside [C] Wire is not properly connected.	TRUE ➡	Connect wires properly END

▼ FALSE

[D] is damaged or not connected.	TRUE ➡	Connect /Replace [D] END

▼ FALSE

[E] has no power supply or has fuse blown.	TRUE ➡	Supply 24V / Replace fuse. END

▼ FALSE

[F] is interrupted or not properly connected	TRUE ➡	Replace [F]/Connect it properly. END

▼ FALSE

[A]/[H] might be damaged check and replace it. END

21. SAFETY SW PORT A/B

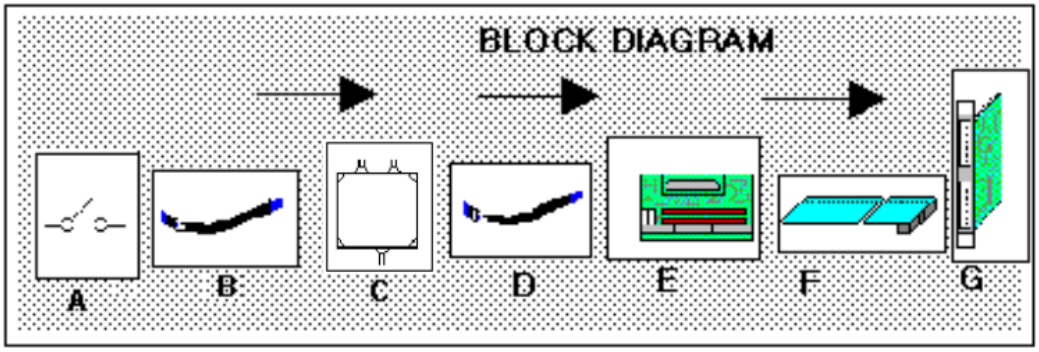

LIST OF ITEMS:

	Side A
A	Micro SW SQ0322D,SQ0322E AND SQ0322F (A-16) & (A-52)
B	Wires 3821,3202,3203,3204 (A-43)
C	Box for internal/external service (A-105)
D	Wires 3824 and 3201
E	TVM 8201 AP387C (A-43)
F	Flat Cable FC5 3403 (X-6)
G	TVM 754 (X-6)

	Side B
A	Micro SW SQ0324D,SQ0324E,SQ0324F, SQ0324G and SQ0324H(A-16) 6 (A-52)
B	Wires 3205,3206,3207,3208,3209and 3833 (A-43)
C	Box for internal/external service (A-105)
D	Wires 3201 and 3833
E	TVM 8201 AP387C (A-43)
F	Flat Cable FC5 3403 (X-6)
G	TVM 754 (X-6)

TROUBLE SHOOTING:

One of the safety panels placed on the right , left and rear of the reactor is open	TRUE ➡	Close the panel . END
▼ FALSE		
[E] has no power supply or has fuse blown	TRUE ➡	Supply 24V / Replace fuse END
▼ FALSE		
[B] is interrupted or not properly connected	TRUE ➡	Replace [B]/Connect it properly END
▼ FALSE		
Check inside [C] Wires are not properly connected	TRUE ➡	Connect wires properly END
▼ FALSE		
[D] is interrupted or not properly connected	TRUE ➡	Replace [D]/Connect it properly END
▼ FALSE		
[F] is interrupted or not properly connected	TRUE ➡	Replace [F]/Connect it properly END
▼ FALSE		
[A] is not properly mounted and does not detect the door closed or is damaged .	TRUE ➡	Replace/mount properly [A] END
▼ FALSE		
[G/E] Damaged . Check and replace it END		

22. FLOW CONTROLLERS ALARM

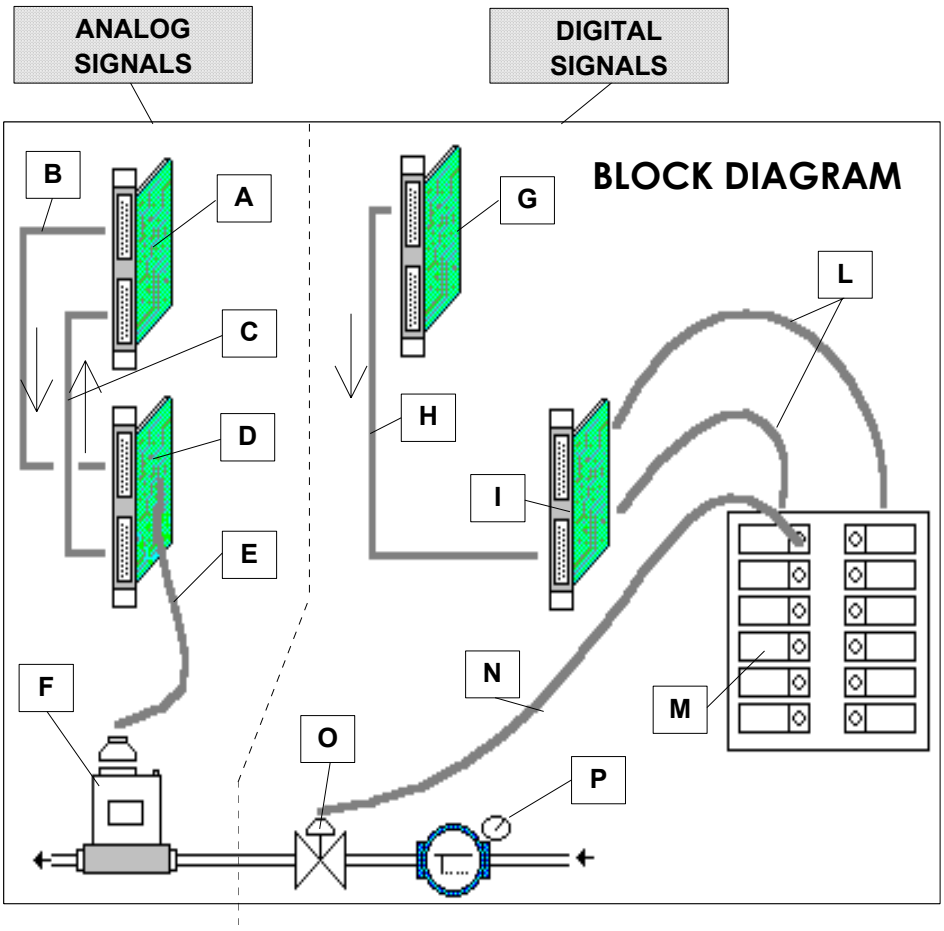

LIST OF ITEMS:

FLOW CONTROLLERS ALARM

	FC1 H2 Main
A	TVM 751 (X-7)
B	FC15 1706 (X-7) (Set Point to MFC)
C	FC 6 1701 (X-7) (Reading from MFC)
D	Analog distributor I/O AP175F (Y-2)
E	MFC Cable (Y2 -J7)
F	MFC 1 (H2 Main)
G	TVM 754 (X-5)
H	FC18 2006(X-5)
I	PCB Digital XP0202G (Y-5)
L	FC 19 2002 & FC20 2013 (Y-5)
M	Solenoid valve group AP288G (R)
N	Pneumatic hose (R)
O	Valves (P-V 7 & V 8)
P	Pressure Regulator (P)

	FC2 H2 Purge
A	TVM 751 (X-7)
B	FC15 1706 (X-7) (Set Point to MFC)
C	FC6 1701 (X-7)(Reading from MFC)
D	Analog distributor I/O AP175F (Y-2)
E	MFC Cable (Y2-J8)
F	MFC 2 (H2 Purge)
G	TVM 754 (X-5)
H	FC18 2006 (X-5)
I	PCB Digital out XP0202G (Y-5)
L	FC 19 2002 & FC20 2013 (Y-5)
M	Solenoid valve group AP288G (R)
N	Pneumatic hose (R)
O	Valves (P-V 3 & V 4 & V 5 & V 6)
P	Pressure Regulator (P)

	FC3 N2 Purge
A	TVM 751 (X-7)
B	FC15 1706 (X-7) (Set Point to MFC)
C	FC 6 1701 (X-7) (Reading from MFC)
D	Analog distributor I/O AP175F (Y-2)
E	MFC Cable (Y2-J9)
F	MFC 3 (N2 Purge)
G	TVM 754 (X-5)
H	FC18 2006 (X-5)
I	PCB Digital out XP0202G (Y-5)
L	FC 19 2002 & FC20 2013 (Y-5)
M	Solenoid valve group AP288G (R)
N	Pneumatic hose (R)
O	Valves (P-V 9 & V 10 & V 1& V 13)
P	Pressure Regulator (P)

	FC80 HCl
A	TVM 751 (X-7)
B	FC15 1706 (X-7) (Set Point to MFC)
C	FC 6 1701 (X-7) (Reading from MFC)
D	Analog distributor I/O AP175F (Y-2)
E	MFC Cable (Y2-J4)
F	MFC 80 (HCl)
G	TVM 754 (X-5)
H	FC18 2006 (X-5)
I	PCB Digital out XP0202G (Y-5)
L	FC 19 2002& FC20 2013 (Y-5)
M	Solenoid valve group AP288G (R)
N	Pneumatic hose (R)
O	Valves (P-V 81& V 82 &V 83)
P	Pressure Regulator (P)

	SX1 Source 1 (only for Source Vaporized version)
A	TVM 751 (X-7)
B	FC15 1706 (X-7) (Set Point to MFC)
C	FC 6 1701 (X-7) (Reading from MFC)
D	Analog distributor I/O AP175F (Y-2)
E	MFC Cable (Y2-J6)
F	SX1 (Source 1)
G	TVM 754 (X-5)
H	FC18 2006 (X-5)
I	PCB Digital out XP0202G (Y-5)
L	FC 19 2002 & FC20 2013 (Y-5)
M	Solenoid valve group AP288G (R)
N	Pneumatic hose (R)
O	Valves (P-V 21 & V 22 & V 23)
P	Pressure Regulator (P)

	FC 21 Source 1 (only for Source MFC version)
A	TVM 751 (X-7)
B	FC15 1706 (X-7) (Set Point to MFC)
C	FC 6 1701 (X-7) (Reading fromMFC)
D	Analog distributor I/O AP175F (Y-2)
E	MFC Cable (Y2-J6)
F	MFC 21 (Source 1)
G	TVM 754 (X-5)
H	FC18 2006 (X-5)
I	PCB Digital out XP0202G (Y-5)
L	FC 19 2002 & FC20 2013 (Y-5)
M	Solenoid valve group AP288G (R)
N	Pneumatic hose (R)
O	Valves (P-V 22 & V 23)
P	Pressure Regulator (P)

	SX1 Source 2 (only for Source Vaporized version)
A	TVM 751 (X-7)
B	FC16 1802 (X-7) (Set Point to MFC)
C	FC7 1801(X-8) (Reading from MFC)
D	Analog distributor I/O AP185F (Y-3)
E	MFC Cable (Y3-J6)
F	SX2 (Source 2)
G	TVM 754 (X-5)
H	FC18 2006 (X-5)
I	PCB Digital out XP0202G (Y-5)
L	FC 19 2002 & FC20 2013 (Y-5)
M	Solenoid valve group AP288G (R)
N	Pneumatic hose (R)
O	Valves (P- V 31 & V 32 & V 33)
P	Pressure Regulator (P)

	FC 22 Source 2 (only for Source MFC version)
A	TVM 751 (X-7)
B	FC16 1802 (X-7) (Set Point to MFC)
C	FC7 1801(X-8) (Reading from MFC)
D	Analog distributor I/O AP185F (Y-3)
E	MFC Cable (Y3-J6)
F	MFC 22 (Source 2)
G	TVM 754 (X-5)
H	FC18 2006 (X-5)
I	PCB Digital out XP0202G (Y-5)
L	FC 19 2002 & FC20 2013 (Y-5)
M	Solenoid valve group AP288G (R)
N	Pneumatic hose (R)
O	Valves (P-V 32 & V 33)
P	Pressure Regulator (P)

	FC 51 Dilute 1
A	TVM 751 (X-7)

	FC 52 Inject 1
A	TVM 751 (X-7)

B	FC15 1706 (X-7) (Set Point to MFC)
C	FC 6 1701 (X-7) (Reading from MFC)
D	Analog distributor I/O AP175F (Y-2)
E	MFC Cable (Y2-J5)
F	MFC 51 (Dilute 1)
G	TVM 754 (X-5)
H	FC18 2006 (X-5)
I	PCB Digital out XP0202G (Y-5)
L	FC 19 2002 & FC20 2013 (Y-5)
M	Solenoid valve group AP288G (R)
N	Pneumatic hose (R)
O	Valve (P-V 51 & V 52)
P	Pressure Regulator (P)

B	FC16 1802 (X-7) (Set Point to MFC)
C	FC 7 1801 (X-8)(Reading from MFC)
D	Analog distributor I/O AP185F (Y-3)
E	MFC Cable (Y3-J4)
F	MFC 52 (Inject 1)
G	TVM 754 (X-5)
H	FC18 2006 (X-5)
I	PCB Digital out XP0202G (Y-5)
L	FC 19 2002 & FC20 2013 (Y-5)
M	Solenoid valve group AP288G (R)
N	Pneumatic hose (R)
O	Valves (P-V 53 & V 54)
P	Pressure Regulator (P)

	FC 53 Dope 1
A	TVM 751 (X-7)
B	FC16 1802 (X-7) (Set Point to MFC)
C	FC 7 1801 (X-8) (Reading from MFC)
D	Analog distributor I/O AP185F (Y-3)
E	MFC Cable (Y3-J5)
F	MFC 53 (Dope 1)
G	TVM 754 (X-5)
H	FC18 2006 (X-5)
I	PCB Digital out XP0202G (Y-5)
L	FC 19 2002 & FC20 2013 (Y-5)
M	Solenoid valve group AP288G (R)
N	Pneumatic hose (R)
O	Valves (P-V 53 & V 54)
P	Pressure Regulator (P)

	FC 61 Dilute 2
A	TVM 751 (X-7)
B	FC16 1802 (X-7) (Set Point to MFC)
C	FC 7 1801 (X-8) (Reading from MFC)
D	Analog distributor I/O AP185F (Y-3)
E	MFC Cable (Y3-J7)
F	MFC 61 (Dilute 2)
G	TVM 754 (X-5)
H	FC18 2006 (X-5)
I	PCB Digital out XP0202G (Y-5)
L	FC 19 2002 & FC20 2013 (Y-5)
M	Solenoid valve group AP288G (R)
N	Pneumatic hose (R)
O	Valves (P-V 61& V 62)
P	Pressure Regulator (P)

	FC 62 Inject 2
A	TVM 751 (X-7)
B	FC16 1802 (X-7) (Set Point to MFC)
C	FC 7 1801 (X-8) (Reading from MFC)
D	Analog distributor I/O AP185F (Y-3)
E	MFC Cable (Y3-J5)
F	MFC 62 (Inject 2)
G	TVM 754 (X-5)
H	FC18 2006 (X-5)
I	PCB Digital out XP0202G (Y-5)
L	FC 19 2002 & FC20 2013 (Y-5)
M	Solenoid valve group AP288G (R)
N	Pneumatic hose (R)
O	Valves (P-V 63 & V 64)
P	Pressure Regulator (P)

	FC 63 Dope 2
A	TVM 751 (X-7)
B	FC16 1802 (X-7) (Set Point to MFC)
C	FC 7 1801 (X-8) (Reading from MFC)
D	Analog distributor I/O AP185F (Y-3)
E	MFC Cable (Y3-J6)
F	MFC 63 (Dope 2)
G	TVM 754 (X-5)
H	FC18 2006 (X-5)
I	PCB Digital out XP0202G (Y-5)
L	FC 19 2002 & FC20 2013 (Y-5)
M	Solenoid valve group AP288G (R)
N	Pneumatic hose (R)
O	Valves (P-V 63 & V 64)
P	Pressure Regulator (P)

	FC 71 Dilute 3
A	TVM 751 (X-8)
B	FC 9 1902 (X-8) (Set Point to MFC)
C	FC 8 1901 (X-9) (Reading from MFC)

	FC 72 Inject 3
A	TVM 751 (X-8)
B	FC 9 1902 (X-8) (Set Point to MFC)
C	FC 8 1901(X-9) (Reading from MFC)

D	Analog distributor I/O AP195F (Y-4)	D	Analog distributor I/O AP195F (Y-4)
E	MFC Cable (Y4-J1)	E	MFC Cable (Y4-J2)
F	MFC 71 (Dilute 1)	F	MFC 72 (Inject 3)
G	TVM 754 (X-5)	G	TVM 754 (X-5)
H	FC18 2006 (X-5)	H	FC18 2006 (X-5)
I	PCB Digital out XP0202G (Y-5)	I	PCB Digital out XP0202G (Y-5)
L	FC 19 2002 & FC20 2013 (Y-5)	L	FC 19 2002 & FC20 2013 (Y-5)
M	Solenoid valve group AP288G (R)	M	Solenoid valve group AP288G (R)
N	Pneumatic hose (R)	N	Pneumatic hose (R)
O	Valves (P-V 71& V 72)	O	Valves (P-V 73 & V 74)
P	Pressure Regulator (P)	P	Pressure Regulator (P)
	FC 73 Dope 3		**FC 83 HCl FAST**
A	TVM 751 (X-8)	A	TVM 751 (X-8)
B	FC 9 1902 (X-8) (Set Point to MFC)	B	FC 9 1902 (X-8) (Set Point to MFC)
C	FC 8 1901 (X-9) (Reading from MFC)	C	FC 8 1901 (X-9) (Reading from MFC)
D	Analog distributor I/O AP195F (Y-4)	D	Analog distributor I/O AP195F (Y-4)
E	MFC Cable (Y4-J4)	E	MFC Cable (Y4-J5)
F	MFC 73 (Dope 3)	F	MFC 83 (Source 3)
G	TVM 754 (X-5)	G	TVM 754 (X-5)
H	FC18 2006 (X-5)	H	FC18 2006 (X-5)
I	PCB Digital out XP0202G (Y-5)	I	PCB Digital out XP0202G (Y-5)
L	FC 19 2002 & FC20 2013 (Y-5)	L	FC 19 2002 & FC20 2013 (Y-5)
M	Solenoid valve group AP288G (R)	M	Solenoid valve group AP288G (R)
N	Pneumatic hose (R)	N	Pneumatic hose (R)
O	Valves (P- V 73 & V 74)	O	Valves (P- V 83)
P	Pressure Regulator (P)	P	Pressure Regulator (P)
	Sx3 (Option) (only for Source Vaporized version)		**FC23 (Option) (only for Source MFC version)**
A	TVM 751 (X-8)	A	TVM 751 (X-8)
B	FC 9 1902 (X-8) (Set Point to MFC)	B	FC 9 1902 (X-8) (Set Point to MFC)
C	FC 8 1901 (X-9) (Reading from MFC)	C	FC 8 1901 (X-9) (Reading from MFC)
D	Analog distributor I/O AP195F (Y-4)	D	Analog distributor I/O AP195F (Y-4)
E	MFC Cable (Y4-J5)	E	MFC Cable (Y4-J5)
F	Sx3 (Source 3)	F	MFC 23 (Source 3)
G	TVM 754 (X-5)	G	TVM 754 (X-5)
H	FC18 2006 (X-5)	H	FC18 2006 (X-5)
I	PCB Digital out XP0202G (Y-5)	I	PCB Digital out XP0202G (Y-5)
L	FC 19 2002 & FC20 2013 (Y-5)	L	FC 19 2002 & FC20 2013 (Y-5)
M	Solenoid valve group AP288G (R)	M	Solenoid valve group AP288G (R)
N	Pneumatic hose (R)	N	Pneumatic hose (R)
O	Valves (P- V 41 & V42)	O	Valves (P- V 42)
P	Pressure Regulator (P)	P	Pressure Regulator (P)

TROUBLE SHOOTING:

Gas line not open.	TRUE ➡	Open gas line. END

▼ FALSE

[P] Operating pressure is not Properly set to achieve flow set point.	TRUE ➡	Set [P] properly. END

▼ FALSE

[O] Does not open .	TRUE ➡	**GO TO R1**

▼ FALSE

[E] Is interrupted or not properly connected.	TRUE ➡	Replace [E]/Connect it properly. END

▼ FALSE

[D] Has no power supply +15V -15V +24V	TRUE ➡	Check all power supply status and power connections. END

▼ FALSE

[D] configuration is not correct	TRUE ➡	Set jumpers mounted on [D] properly. END

▼ FALSE

[B] is interrupted or not properly connected.	TRUE ➡	Replace [B]/Connect it properly. END

▼ FALSE

[C] is interrupted or not properly connected.	TRUE ➡	Replace [C]/Connect it properly. END

▼ FALSE

Disconnect [E] and insert a jumper between the set point pin and the feedback on [E] connector . Now check if the reading value is equal to the relevant set point .	TRUE ➡	[F] Probably damaged Check and replace it END

▼ FALSE

[D] Probably damaged
Check and replace it
END

R1

The solenoid valve operating [O] through [N] is on.)

TRUE ➡

Pneumatic problem..
Check:
1) Compressed air pressure (The operating pressure is 6 Bars)
2) Compressed air pressure at the end of [N] (It might be insufficient in case of compressed air leak inside [M] or in [N])
3) [O] Might be damaged
END

▼ FALSE

[L] Is interrupted or not properly connected

TRUE ➡

Replace [L] connect it properly
END

▼ FALSE

[I] Has no power supply or fuse blown

TRUE ➡

Check 24V Power supply status and power connections.
Replace fuse.
END

▼ FALSE

[H] Is interrupted or not properly connected

TRUE ➡

Replace [H] connect it properly
END

▼ FALSE

[I] or [M] are damaged.
In case the misfunction involves several solenoid valves replace [I] first.

END

23. PYROMETER A/B TROUBLE

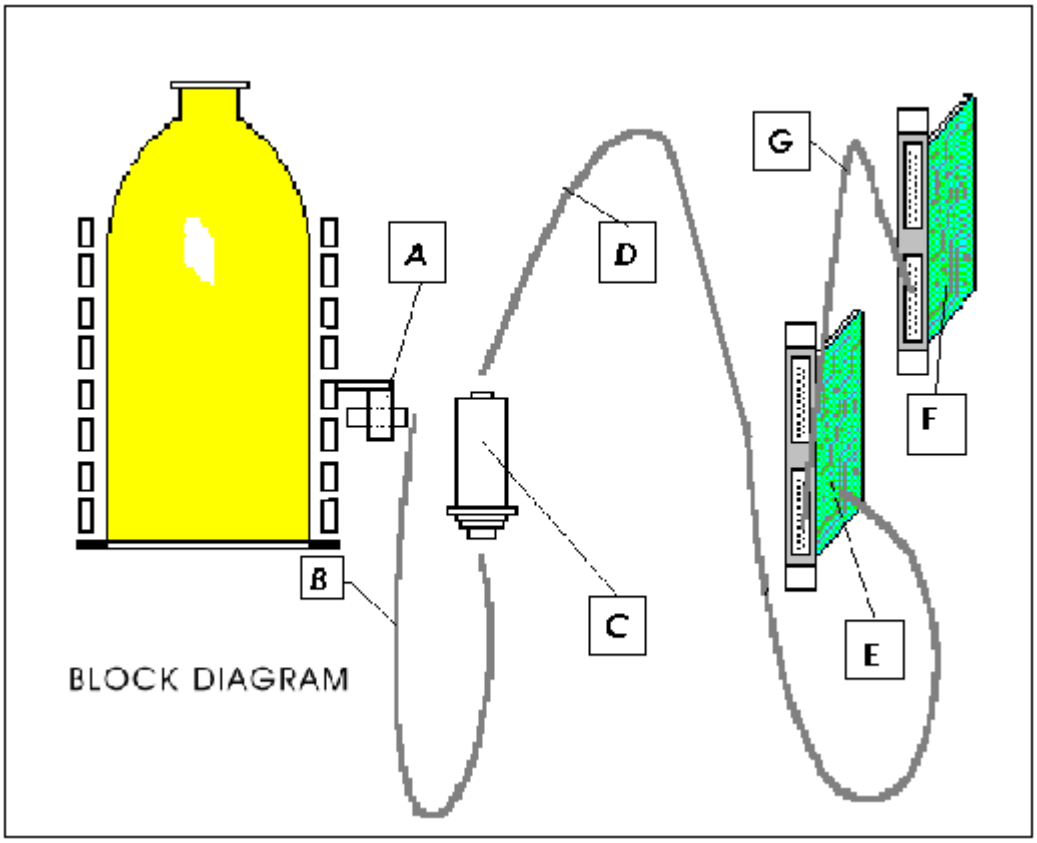

	LIST OF ITEMS A SIDE
A	Pyrometer lens (N-22)
B	Optical fiber (N-21)
C	Pyrometer sensing head AP01912J (N-24)
D	Pyrometer sensing head signal cable
E	PCB Analog I/O with pyrometer preamplifyer AP195F (Y-4 J6)
F	TVM 751 (X-9)
G	Flat cable FC8 1901 (X-9)&(Y-4)

	LIST OF ITEMS B SIDE
A	Pyrometer lens (N-22)
B	Optical fiber (N-21)
C	Pyrometer sensing head AP01915J (N-24)
D	Pyrometer sensing head signal cable
E	PCB Analog I/O with pyrometer preamplifyer AP195F (Y-4 J9)
F	TVM 751 (X-9)
G	Flat cable FC8 1901 (X-9)&(Y-4)

TROUBLE SHOOTING

[A] is dirty or is not properly mounted.	TRUE ➡	Clean/Mount [A] properly. END
▼ FALSE		
Bell jar is coated.	TRUE ➡	Wash the bell jar END
▼ FALSE		
[B] is damaged or is not connected to [C].	TRUE ➡	Replace/connect [B]. END
▼ FALSE		
[D] is interrupted or not properly connected to [E].	TRUE ➡	Replace/connect properly [D] . END
▼ FALSE		
[E] pyrometer preamplifier is damaged	TRUE ➡	Replace pyrometer preamplyfier integrated circuit. END
▼ FALSE		
[E] has no power supply +15 Vdc -15 Vdc +24 Vdc	TRUE ➡	Check all power supply status and power connections. END
▼ FALSE		
[E] configuration is not correct .*	TRUE ➡	Set jumpers mounted on [E] properly. END
▼ FALSE		
[E] is damaged	TRUE ➡	Replace [E] END
▼ FALSE		
[F] is damaged or not properly connected	TRUE ➡	Replace/connect [F] properly END
▼ FALSE		
[G] may be damaged . Replace it. END		

* PCB (Y-2/3/4) Setting		
	(Y-2) [AP175F]	
	P1, P2, P4, P6	CLOSED
	P3, P5, P7 ,P8	OPEN
	(Y-3) [AP185F]	
	P1, P2, P4, P6	CLOSED
	P3, P5, P7 ,P8	OPEN
	(Y-4) [AP195F]	
	P3, P5, P7, P8	CLOSED
	P1, P2, P4, P6	OPEN

Given when:

P_{tot} > 30.000 and T_{act} < 800

Where P_{tot} is the total power supplied to the Reactor and is increased every seconds.
Therefore it could be possible to have pyrometer trouble by giving low power for long time or high power for short time without temperature reading.

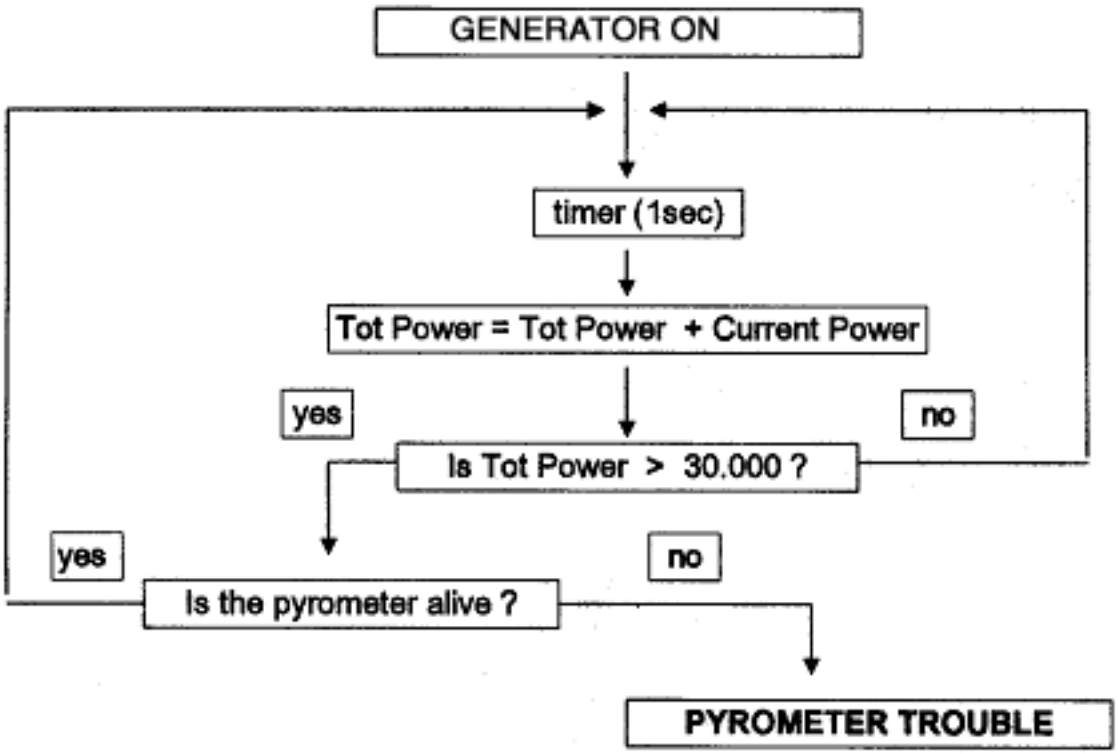

24. BUBBLER 1/2/3 EMPTY

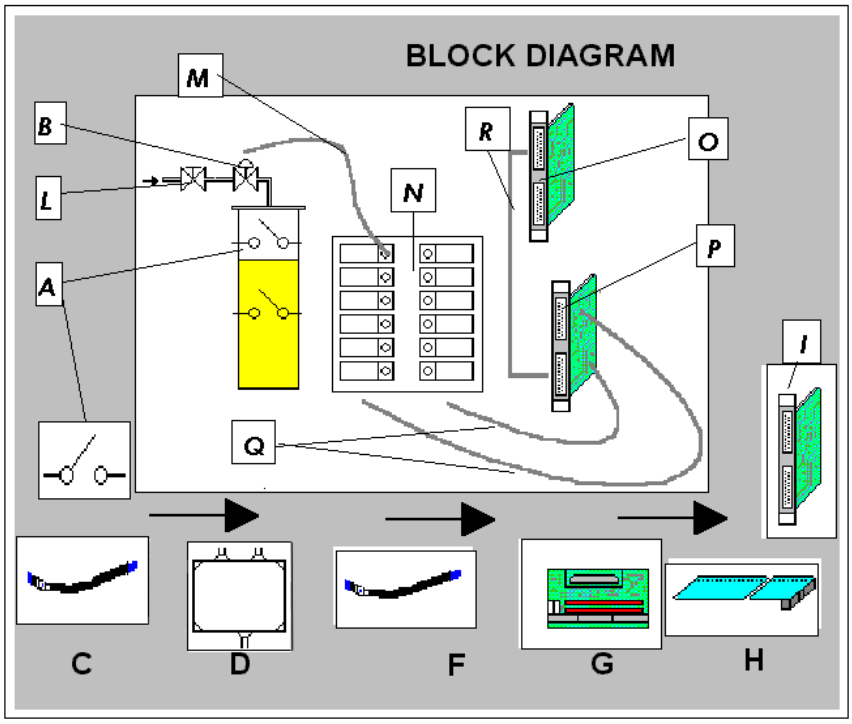

LIST OF ITEMS:

	Bubbler 1/2/3
A	Proximity SW
B	Refilling valve (VBBL)
C	Wires to the reactor 3842 and 3845 (bubbler1) or 3847 and 3849(bubbler 2)
D	Box for internal/external service (A-105)
F	Wires 3841 and 3844 (bubbler 1)or 3846 and 3848 (bubbler 2) (A-43)
G	TVM 8201 AP387C (A-43)
H	Flat cable FC5 3403 (A-43)
I	TVM 754 (X-6)
L	Manual valve (VB3)
M	Pneumatic hose
N	Solenoid valve group AP288G (R)
O	TVM 754 (X-5)
P	PCB Digital out XP0202G (Y-5)
Q	Flat cables FC19 2002 & FC20 2013 (Y-5)
R	Flat cable FC18 2006 (X-5)

TROUBLE SHOOTING:

Pressure in the tank not sufficient..		
▼ FALSE		
The line from the tank is closed.	TRUE ➡	Open the line. END
▼ FALSE		
[L] Is closed	TRUE ➡	Open [L] END
▼ FALSE		
Main silicon tank is empty.	TRUE ➡	Replace silicon tank. END
▼ FALSE		
There was not enough time to fill the bubbler.	TRUE ➡	Wait until the bubbler is full before using source . END
▼ FALSE		
[B] Does not open	TRUE ➡	**GO TO R1**
▼ FALSE		
The solenoid valve operating [B] through [M] not on.	TRUE ➡	**GO TO R1**
▼ FALSE		
[G] has no power supply or has fuse blown	TRUE ➡	Supply 24V / Replace fuse END
▼ FALSE		
[C] is interrupted or not properly connected	TRUE ➡	Replace [C]/Connect it properly END
▼ FALSE		
Check inside [D] . Wires are not properly connected.	TRUE ➡	Connect wires properly. END
▼ FALSE		
[F] is interrupted or not properly connected	TRUE ➡	Replace [F]/Connect it properly END

▼ FALSE

[H] is interrupted or not properly connected	TRUE ➡	Replace [H]/Connect it properly END

▼ FALSE

Check:
1) Compressed air pressure (The operating pressure is 6 Bars)
2) Compressed air pressure at end of [M] (It might be insufficient in case of compressed air leak inside [M] or in [N])
3) [B] Might be damaged
4) [A] is probably damaged check and replace it.
END

R1

[Q] Is interrupted or not properly connected	TRUE ➡	Replace [Q] connect it properly END

▼ FALSE

[P] Has no power supply or fuse blown	TRUE ➡	Check 24V Power supply status and power connections. Replace fuse. END

▼ FALSE

[R] Is interrupted or not properly connected	TRUE ➡	Replace [R] connect it properly END

▼ FALSE

[P] or [N] are damaged.
In case the misfunction involves several solenoid valves replace [P] first.
Before replacing [N] check if all diodes are properly mounted.
END

25. SPOILER TROUBLE

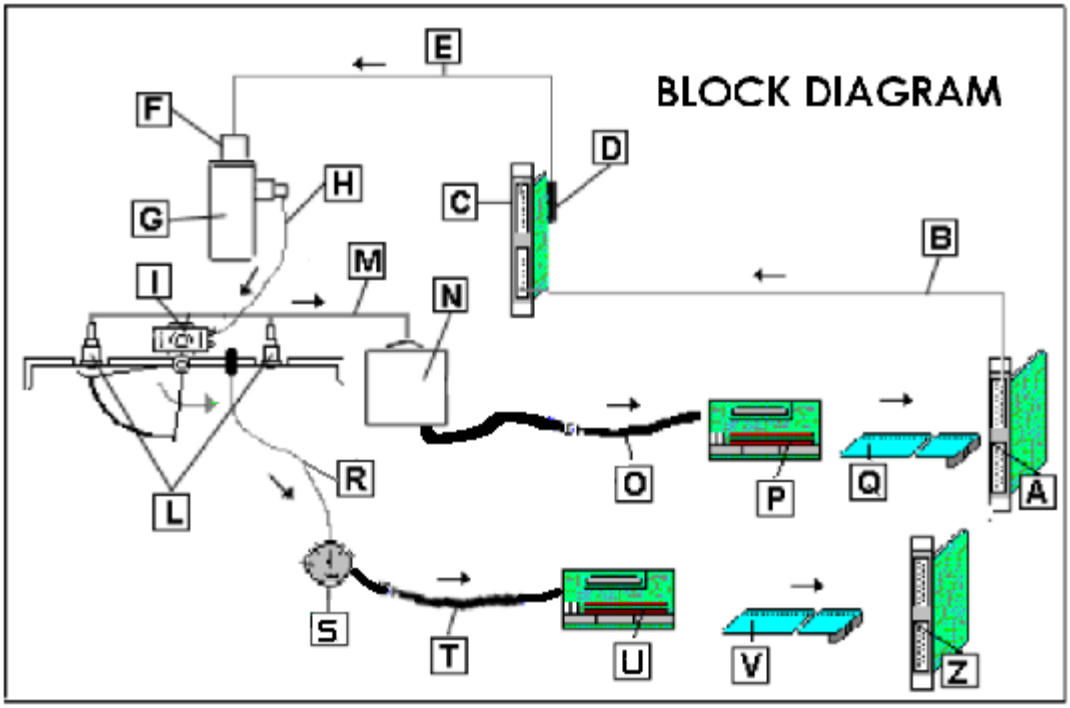

LIST OF ITEMS

	Side A
A	TVM 754 (X-6)
B	Flat cable FC17 2008 (X-6) & (Y-5)
C	PCB Digital out XP0202G (Y-5)
D	PCB Digital out Connector XP0202F
E	Wires 2012 (GND) 2015 (+24VDc)
F	Solenoid valve EVTA YV2012C (G-6)
G	3-way valve (G-5)
H	Hose (EVTA)
I	Pneumatic actuator (Q-53)
L	Proximity switch BQ0327D (Q-54)
M	Proximity switch wires 3835,3211 & 3212
N	Box for internal/external service (A-105)
O	Wire 3834
P	TVM 8201 AP387C (A-43)
Q	Flat Cable FC5 3403 (A-43) & (X-6)
R	Hose
S	Spoiler Pressure switch SQ369H (Q-29)

LIST OF ITEMS

	Side B
A	TVM 754 (X-6)
B	Flat cable FC17 2008 (X-6) & (Y-5)
C	PCB Digital out XP0202G (Y-5)
D	PCB Digital out Connector XP0202F
E	Wires 2012 (GND) 2019 (+24VDc)
F	Solenoid valve EVTB YV2013 C (G-6)
G	3-way valve (G-5)
H	Hose (EVTB)
I	Pneumatic actuator (Q-53)
L	Proximity switch BQ0328D (Q-54)
M	Proximity switch wires 3839,3214 & 3215
N	Box for internal/external service (A-105)
O	Wire 3838
P	TVM 8201 AP387C (A-43)
Q	Flat Cable FC5 3403 (A-43) & (X-6)
R	Hose
S	Spoiler Pressure switch SQ369H (Q-29)

T U V Z	Wires 3616 & 3617 TVM 8201 AP367C (A-23) Flat cable FC4 3402 (A-23) & (X-5) TVM 754 (X-5)	T U V Z	Wires 3616 & 3617 TVM 8201 AP367C (A-23) Flat cable FC4 3402 (A-23) & (X-5) TVM 754 (X-5)

TROUBLE SHOOTING:

Please goes to the Diagnostic→ Spoiler menu and verify the actual spoiler status with the reference table

▼

The spoiler do not change position o or doesn't reach the correct position — TRUE ➡ GO TO R1

▼ FALSE

The spoiler change position but the sensor doesn't detect his movement — TRUE ➡ GO TO R2

R1 Spoiler command failed

▼ FALSE

Compressed air is closed — TRUE ➡ Open/adjust compressed air. END

▼ FALSE

The spoiler is mechanically lock /or damaged — TRUE ➡ Replace/Adjust the spoiler properly. END

▼ FALSE

[I] Is damaged or not properly connected. — TRUE ➡ Replace/Connect [I] properly. END

▼ FALSE

[H] Is damaged or not properly connected. — TRUE ➡ Replace/Connect [H] properly. END

▼ FALSE

[G] Is damaged or not properly connected. — TRUE ➡ Replace/Connect [G] properly. END

▼ FALSE

[F] Is damaged or not properly connected. — TRUE ➡ Replace/Connect [F] properly. END

▼ FALSE

[E] Is damaged or not properly connected.	TRUE ➡	Replace/Connect [E] properly. END

▼ FALSE

[D] Is damaged or not properly connected.	TRUE ➡	Replace/Connect [D] properly. END

▼ FALSE

[C] Is damaged or not properly connected.	TRUE ➡	Replace/Connect [C] properly. END

▼ FALSE

[B] Is damaged or not properly connected.	TRUE ➡	Replace/Connect [B]properly. END

▼ FALSE

R2 -1

[A] Is damaged	TRUE ➡	Replace [A] END

Spoiler limit sensor feedback check procedure

[L] Is damaged or don't detect the spoiler.	TRUE ➡	Replace/Adjust position [L] properly. END

▼ FALSE

[M] Is damaged or not properly connected.	TRUE ➡	Replace/Connect [M] properly. END

▼ FALSE

[N] Is not properly connected.	TRUE ➡	Connect [N] properly. END

▼ FALSE

[O] Is damaged or not properly connected.	TRUE ➡	Replace/Connect [O] properly. END

▼ FALSE

[P] Has no 24V power supply. or has fuse blown.	TRUE ➡	Supply 24V / Replace fuse. END

▼ FALSE

[Q] Is damaged or not	TRUE ➡	Replace/Connect [Q] properly.

properly connected.		END

▼ FALSE

[A] Is damaged .	TRUE ➡	Replace [A]. END

R2-2 Spoiler pressure switch feedback check procedure

[R] Is damaged or not properly connected.	TRUE ➡	Replace/Connect [R] properly. END

▼ FALSE

[S] Is damaged or not properly connected.	TRUE ➡	Replace/Connect [S] properly. END

▼ FALSE

[T] is damaged or not properly connected	TRUE ➡	Replace/Connect [T] properly. END

▼ FALSE

[U] Has no 24V power supply. or has fuse blown.	TRUE ➡	Supply 24V / Replace fuse. END

▼ FALSE

[V] is damaged or not properly connected	TRUE ➡	Replace/Connect [V] properly. END

▼ FALSE

[z] is damaged	TRUE ➡	Replace [Z] END

26. ROTATION / PHOTOCELL TROUBLE

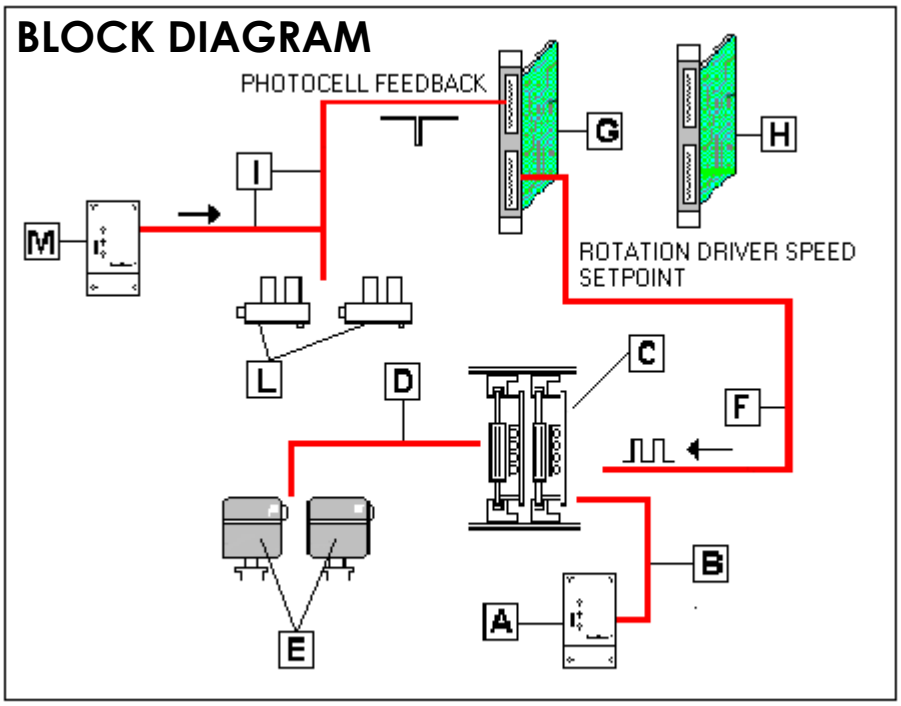

	LIST OF ITEMS A SIDE		LIST OF ITEMS B SIDE
A	Power Supply 60Vdc UV272D (Y-14)	**A**	Power Supply 60Vdc UV272D (Y-14)
B	Power supply cables to drivers 2606 (gnd) & 2601 (+60Vdc) .	**B**	Power supply cables to drivers 2606 (gnd) & 2612 (+60Vdc)
C	Stepping motor driver UV262C (Y-12)	**C**	Stepping motor drivers UV 269C (Y-13)
D	Stepping motor cables 2602,2603,2604 & 2605	**D**	Stepping motor cables 2613,2614,2615 & 2616
E	Stepping motors MD0266H	**E**	Stepping motors MD02613H
F	Cable FC11 2608	**F**	Cable FC11 2608
G	TVM Stepper Aux (X-11)	**G**	TVM Stepper Aux (X-11)
H	TVM 231/ROT	**H**	TVM 231/ROT
I	Cable FC14 3405	**I**	Cable FC14 3405
L	Photocells BF0352F(H-18)	**L**	Photocells BF0352E (H-18)
M	Power supply 24Vdc UV0224D (Y-6)	**M**	Power supply 24Vdc UV0224D (Y-6)

TROUBLE SHOOTING:

Please give
Reset motor command
(Diagnostics menu-Rotation option)

The Susceptor is rotating — TRUE ➡ **GO TO first to Photocell trouble and then to Rotation Trouble**

▼ FALSE

Are [E] impulsed .
(When impulsed the 4 leds are on) — TRUE ➡ Susceptor rotation mechanical jam.
END

▼ FALSE

GO TO Rotation Trouble

PHOTOCELL TROUBLE

[M] Is not working or
not properly connected. — TRUE ➡ Check 24Vdc power supply status and power connections.
END

▼ FALSE

[I] interrupted or not
properly connected. — TRUE ➡ Replace / Connect
[I] properly.
END

▼ FALSE

[L] Damaged or not properly
connected — TRUE ➡ Replace / Connect
[L] properly.
END

▼ FALSE

[G] / [H] Probably damaged .
Check and replace it.
END

ROTATION TROUBLE

[A] Damaged or not
properly connected. — TRUE ➡ Replace or connect .
[A] properly .
END

▼ FALSE

[B] Damaged or not
properly connected. — TRUE ➡ Replace or connect .
[B] properly .
END

▼ FALSE

[C] Damaged or not set at 1,2 A.	TRUE ➡	Replace or set [C] properly. END

▼ FALSE

[D] Is damaged or not properly connected.	TRUE ➡	Replace or connect . [D] properly . END

▼ FALSE

[E] Is damaged or locked.	TRUE ➡	Check and replace [E]. END

▼ FALSE

[F] Is interrupted or not properly damaged.	TRUE ➡	Replace or connect . [F] properly . END

▼ FALSE

[G] / [H] Is probably damaged.
Check and replace it.

27. SAFETY SW RP PORT WARNING

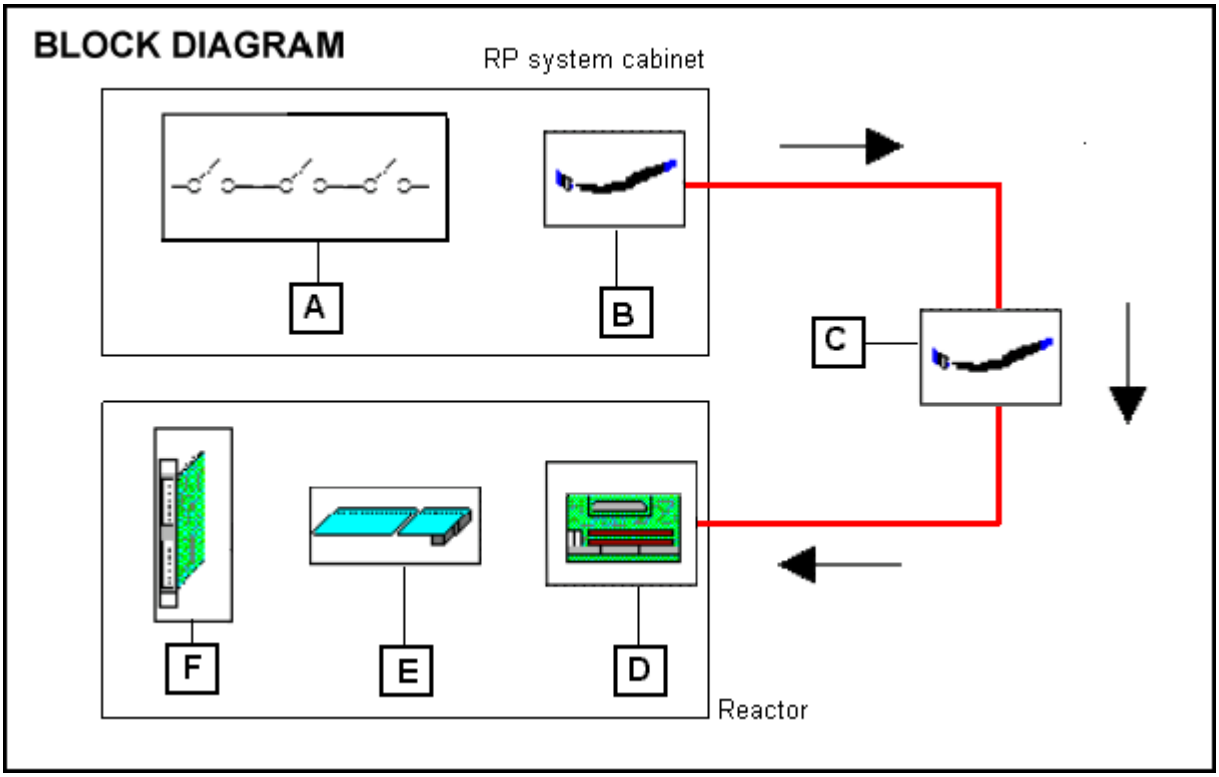

NOTE:

This alarm is enable only if is available the Reduced Pressure System

LIST OF ITEMS:

A **B**	RP cabinet switches: Valve cabinet switch S1549C Pump cabinet left switch S1547C Pump cabinet right switch S15411E Switches wires: Valve cabinet switch 15403&15405 Pump cabinet left switch 15406 & 15410 Pump cabinet right switch 15409 & 15410
C **D** **E**	RP cabinet to reactor connection wires 15401 & 15402 TVM 8201 AP397C (A-71) Flat Cable FC3 3401(X-5)
F	TVM 754 (X-5)

TROUBLE SHOOTING:

One of RP cabinet port is open	TRUE ➡	Close the door. END
▼ FALSE		
[A] is not properly mounted and does not detect the door closed or is damaged	TRUE ➡	Replace/mount properly [A] END
▼ FALSE		
[B] is interrupted or not properly connected	TRUE ➡	Replace [B]/Connect it properly END
▼ FALSE		
[C] is interrupted or not properly connected	TRUE ➡	Replace [C]/Connect it properly END
▼ FALSE		
[D] has no power supply or has fuse blown	TRUE ➡	Supply 24V / Replace fuse END
▼ FALSE		
[E] is interrupted or not properly connected	TRUE ➡	Replace [E]/Connect it properly END
▼ FALSE		
[F] Damaged . Check and replace it END [F] Damaged .		

28. N2 VACUUM PUMP ALARM

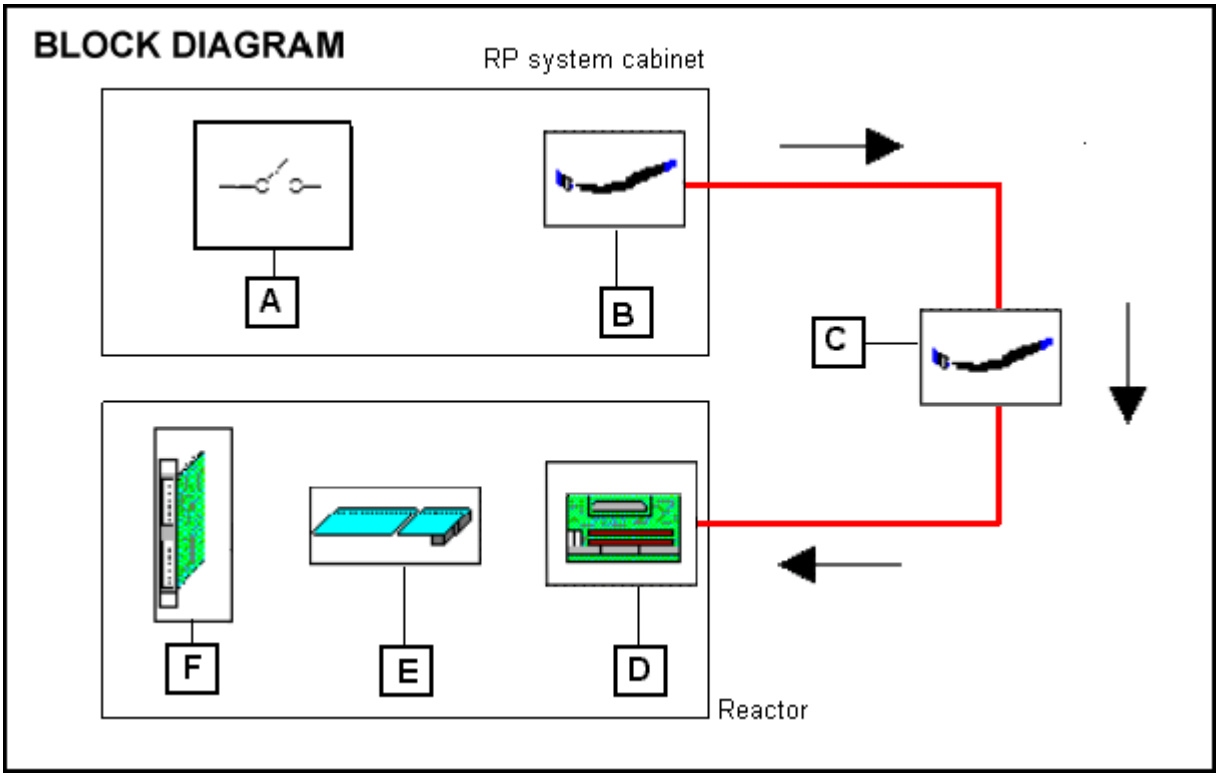

NOTE:

This alarm is enable only if is available the Reduced Pressure System

LIST OF ITEMS:

A **B**	N2 flow switch XP15222D N2 pressure switch wire 15203 & 15208
C **D** **E**	RP cabinet to reactor connection wires 15201 & 15202 TVM 8201 AP387C (A-43) Flat Cable FC5 3403 (X-6)
F	TVM 754 (X-6)

TROUBLE SHOOTING:

N2 is close or flow isn't enough. Please see pump manual For more reference	TRUE ➡	Open N2 or adjust the pressure. END

▼ FALSE

[A] is not properly set and does not detect the correct pressure or is damaged	TRUE ➡	Replace/set it [A] END

▼ FALSE

[B] is interrupted or not properly connected	TRUE ➡	Replace [B]/Connect it properly END

▼ FALSE

[C] is interrupted or not properly connected	TRUE ➡	Replace [C]/Connect it properly END

▼ FALSE

[D] has no power supply or has fuse blown	TRUE ➡	Supply 24Vdc / Replace fuse END

▼ FALSE

[E] is interrupted or not properly connected	TRUE ➡	Replace [E]/Connect it properly END

▼ FALSE

[F] Damaged . Check and replace it END [F] Damaged .

29. COMPRESSED AIR VACUUM VALVE ALARM

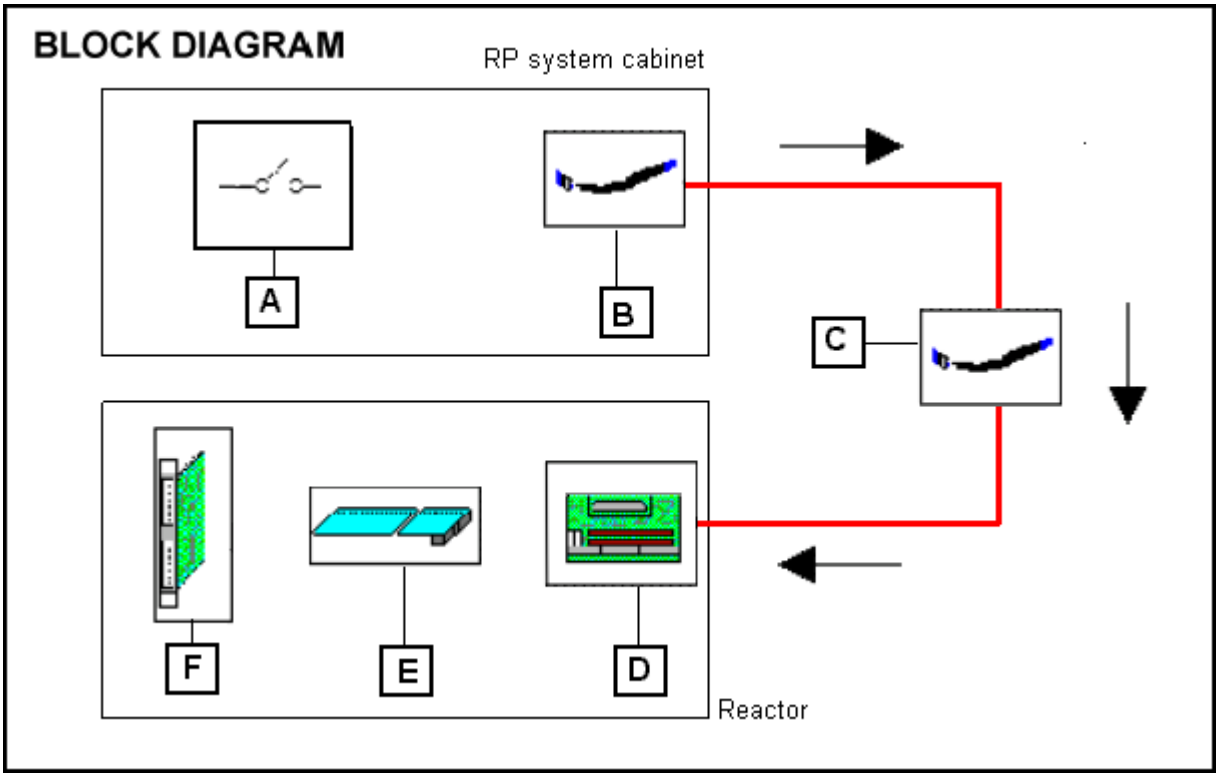

NOTE:

This alarm is enable only if is available the Reduced Pressure System

LIST OF ITEMS:

A	Compressed air pressure switch XP1523D
B	Compressed air pressure switch wire 15209 & 15210
C	RP cabinet to reactor connection wires 15206 & 15207
D	TVM 8201 AP387C (A-43)
E	Flat Cable FC5 3403 (X-6)
F	TVM 754 (X-6)

TROUBLE SHOOTING:

Compressed air is close or pressure is lower than 6 Bar	TRUE ➡	Open the compressed air or adjust the pressure. END
▼ FALSE		
[A] is not properly set and does not detect the correct pressure or is damaged	TRUE ➡	Replace/set it at 5.5 Bar [A] END
▼ FALSE		
[B] is interrupted or not properly connected	TRUE ➡	Replace [B]/Connect it properly END
▼ FALSE		
[C] is interrupted or not properly connected	TRUE ➡	Replace [C]/Connect it properly END
▼ FALSE		
[D] has no power supply or has fuse blown	TRUE ➡	Supply 24Vdc / Replace fuse END
▼ FALSE		
[E] is interrupted or not properly connected	TRUE ➡	Replace [E]/Connect it properly END
▼ FALSE		
[F] Damaged . Check and replace it END [F] Damaged .		

30. VACUUM PUMP TROUBLE ALARM

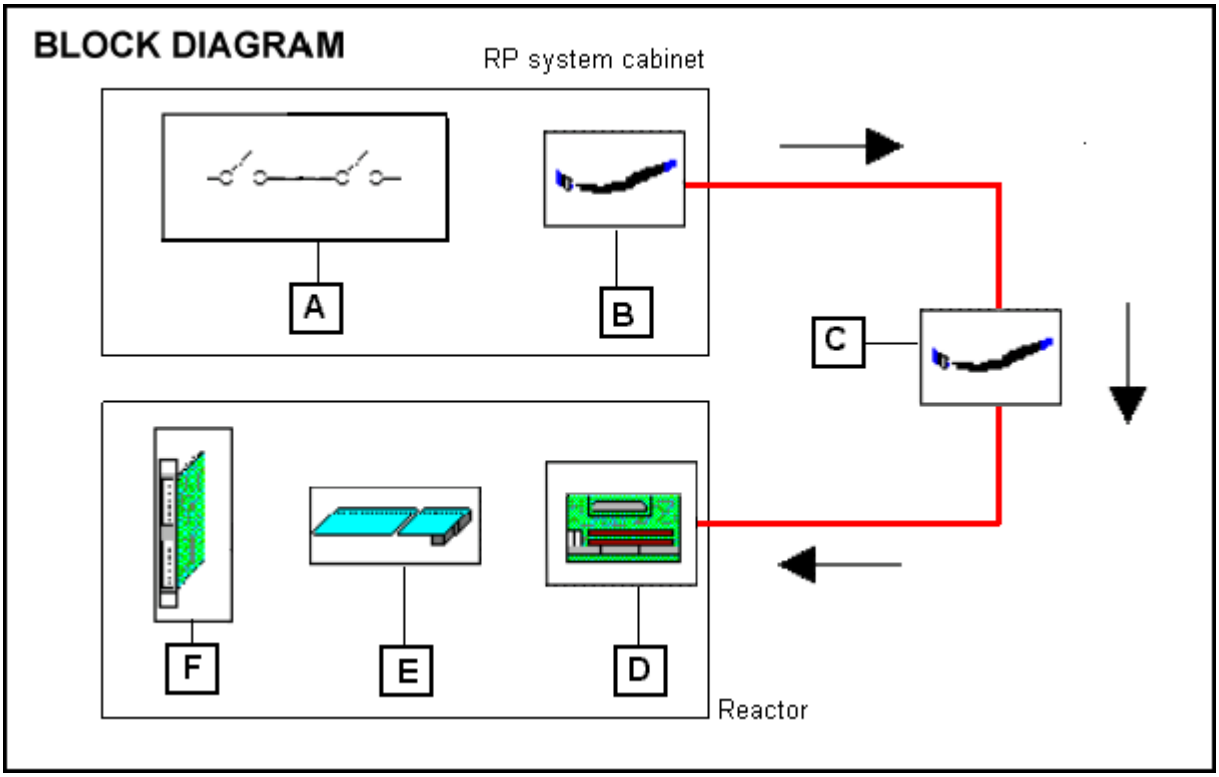

NOTE:

This alarm is enable only if is available the Reduced Pressure System

LIST OF ITEMS:

A	Main pump auxiliary switch K1043H
	Booster pump auxiliary switch K1036H
B	Wire 10502 & 10503
C	RP cabinet to reactor connection wires 15413 & 15414
D	TVM 8201 AP387C (A-43)
E	Flat Cable FC5 3403 (X-6)
F	TVM 754 (X-6)

TROUBLE SHOOTING:

One or both vacuum pump are switched OFF	TRUE ➡	Switch ON both vacuum pumps END

▼ FALSE

Main power supply is not present	TRUE ➡	Check /Reestablish the power supply END

One or both vacuum pumps thermal switches has been triggered	Check thermal switch setting with electric drawings/ check motor connections/ replace if damaged

▼ FALSE

[B] is interrupted or not properly connected	TRUE ➡	Replace [B]/Connect it properly END

▼ FALSE

[C] is interrupted or not properly connected	TRUE ➡	Replace [C]/Connect it properly END

▼ FALSE

[D] has no power supply or has fuse blown	TRUE ➡	Supply 24Vdc / Replace fuse END

▼ FALSE

[E] is interrupted or not properly connected	TRUE ➡	Replace [E]/Connect it properly END

▼ FALSE

[F] Damaged . Check and replace it END

31. FRONT SHIELD CLOSE

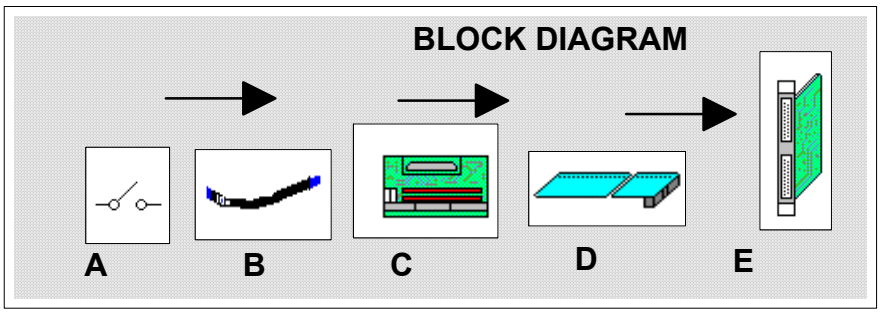

LIST OF ITEMS:

A	Limit SW SQ388H (G-4)
B	Wires 3850 and 3851 (A-43)
C	TVM 8201 AP387C (A-43)
D	Flat cable FC5 3403 (X-6)
E	TVM 754 (X-6)

TROUBLE SHOOTING:

Shield is not close	TRUE ➡	Close the shield END

▼ FALSE

[C] has no power supply or has fuse blown	TRUE ➡	Supply 24V / Replace fuse END

▼ FALSE

[B] is interrupted or not properly connected	TRUE ➡	Replace [B]/Connect it properly END

▼ FALSE

[D] is damaged or not properly connected	TRUE ➡	Replace [D] /Connect it properly END

▼ FALSE

[A]/[E] is probably damaged check and replace it.
END

32. EMERGENCY WATER

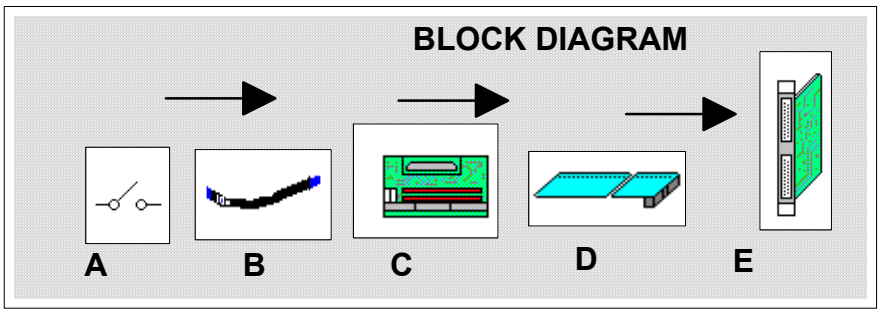

LIST OF ITEMS:

A	Feedback from timer KT439G
B	Wires 3931 and 3932 (A-43)
C	TVM 8201 AP397C (A-43)
D	Flat cable FC3 3403 (X-5)
E	TVM 754 (X-5)

TROUBLE SHOOTING:

No main cooling water supplied to reactor during process (See ENCLOSURE 3)	TRUE ➡	Supply cooling water to the reactor END

▼ FALSE

There is a leak in the compressed air circuit or compressed air is close.	TRUE ➡	Fix the compressed air circuit /open it END

▼ FALSE

[C] has no power supply or has fuse blown	TRUE ➡	Supply 24V / Replace fuse END

▼ FALSE

[B] is interrupted or not properly connected	TRUE ➡	Replace [B]/Connect it properly END

▼ FALSE

[D] is damaged or not properly connected	TRUE ➡	Replace [D] /Connect it properly END

▼ FALSE

[A]/[E] is probably damaged check and replace it. END

33. BUBBLER T.C. OUT OF RANGE

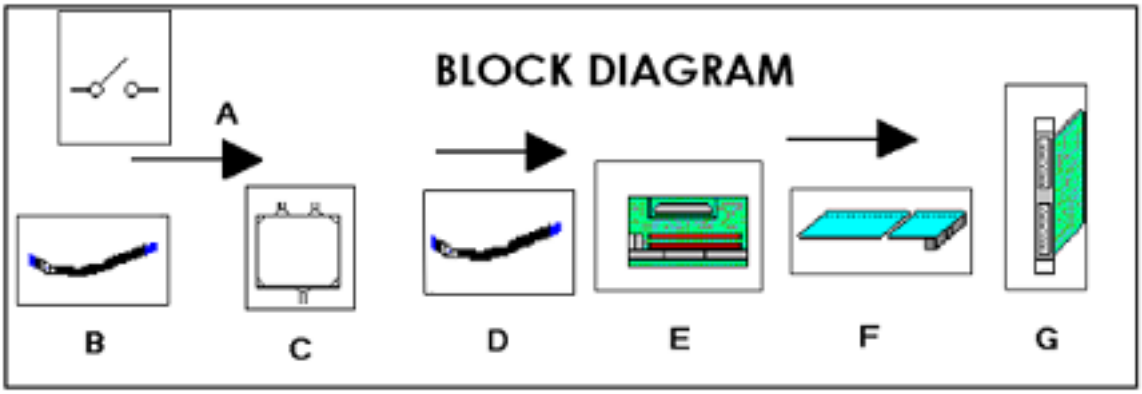

LIST OF ITEMS:

A	Thermal Controller feedback contact.
B	Wire from Bubbler Thermal Controller
C	Box for internal/external service (A-105)
D	Wires 3618 and 3619
E	TVM 8201 AP367C (A-43)
F	Flat Cable FC4 3402(X-5)
G	TVM 754 (X-5

TROUBLE SHOOTING:

The Bubbler Thermal Controller is OFF or isn't able to maintain the temperature set point	TRUE ➡	Turn the Thermal Controller ON. Check the Thermal Controller Operation. END

▼ FALSE

[A] contact is open.	TRUE ➡	Replace [A]. END

▼ FALSE

[B] is interrupted or not properly connected	TRUE ➡	Replace [B]/Connect it properly END

▼ FALSE

Check inside [C] Wire is not properly connected.	TRUE ➡	Connect wires properly END

▼ FALSE

[D] is damaged or not connected.	TRUE ➡	Connect /Replace [D] END

▼ FALSE

[E] has no power supply or has fuse blown.	TRUE ➡	Supply 24V / Replace fuse. END

▼ FALSE

[F] is interrupted or not properly connected	TRUE ➡	Replace [F]/Connect it properly. END

▼ FALSE

[A]/[H] might be damaged check and replace it. END

34. GENERATOR TROUBLE

WARNING!

ONLY FOR MOD. PE2061

In the case frequency converter indicates abnormality, its indication appears on digital console. On this occasion clarify the cause referring to the following and take the remedial measures.
If the abnormality is not corresponding to any of the following, please contact our company.

- **AC/DC CONVERTER ALARMS**

ALARM MESSAGE : *EEPROM FAULT*
EMERGENCY STOP : *YES*
CAUSE OF TROUBLE : *EEPROM writing impossible.*

CONTENT OF CHECK	REMEDIAL MEASURES
	* Replace EEPROM (IC n. 23) in the electronic card 585.C2.

ALARM MESSAGE : *EEPROM ERROR*
EMERGENCY STOP : *YES*
CAUSE OF TROUBLE : *Error in data reading or storage.*

CONTENT OF CHECK	REMEDIAL MEASURES
	* Check that all setting data are correct entered by the digital console

ALARM MESSAGE : *CARD SUPPLIES FAILURE*
EMERGENCY STOP : *YES*
CAUSE OF TROUBLE : *Internal supplies card 585.C2 are not correct.*

CONTENT OF CHECK	REMEDIAL MEASURES
* Control the supplies point on the card with a voltmeter between: 0S(GND) ÷ +5 you must read: +5 V 0S(GND) ÷ V_{DD} you must read: +13.4 V 0S(GND) ÷ V_{EE} you must read: -13.5 V	* If you don't read those voltages change the card.

ALARM MESSAGE : *PHASES SEQUENCE*
EMERGENCY STOP : *YES*
CAUSE OF TROUBLE : *Sequence of line phases not correct.*

CONTENT OF CHECK	REMEDIAL MEASURES
	* At the first voltage connection: transpose 2 of the 3 cables on the main switch terminals. * Afterwards: restore the correct sequence of line supply.

ALARM MESSAGE : *OUT RAMP AVERAGE.S.O. (SYNCHRONISM RAMPS NOT FORMED)*

EMERGENCY STOP : *YES*
CAUSE OF TROUBLE : *The ramps in order to generate the impulses of firing are not correctly formed.*

CONTENT OF CHECK	REMEDIAL MEASURES
* A phase of the synchronisms are lacking. * Voltage phase anomaly of R0, S0 and T0.	* Check the voltages of R0, S0 and T0 on 585.C2 card respect to ground (GND). * Check the synchronism fuses.

ALARM MESSAGE : *CURRENT UNBALANCE*
EMERGENCY STOP : *YES*
CAUSE OF TROUBLE : *The current value on SCRs of the converter is not balanced.*

CONTENT OF CHECK	REMEDIAL MEASURES
* One or more of the three-phase fuses is blown.	* Check the fuses.
* One SCR of the converter is open or short circuit.	* Check the SCRs of the converter.
* The firing pulses from 505.E1 or 505.L1 are not started.	* Replace electronic card 505.E1/L1.

ALARM MESSAGE : *DRIVE OVERLOAD*
EMERGENCY STOP : *YES*
CAUSE OF TROUBLE : *The value of the current exceeds continuously the rated current set by the parameter S15.*

CONTENT OF CHECK	REMEDIAL MEASURES
* The frequency is not within the frequency working range (see item 2.).	* Check the value of medium frequency. The load (resonant circuit) is not matched: change load parameters (inductor, capacitors)
* The value set of S13 parameter is not correct.	* Check the value of S13.
* The value set of S14 parameter is not correct.	* Check the value of S14.

ALARM MESSAGE : *DRIVE OVERTEMPERATURE (AC/DC CONVERTER KLIXON)*
EMERGENCY STOP : *YES*
CAUSE OF TROUBLE : *Overheating of AC/DC converter heatsink*

CONTENT OF CHECK	REMEDIAL MEASURES
* Check and remedial measures as SCR TEMP. PROBE	

ALARM MESSAGE : *ABSOLUTE MAXIMUM CURRENT*
EMERGENCY STOP : *YES*

CAUSE OF TROUBLE : *The output current is greater than the maximum current sets in S14 (about twice).*

CONTENT OF CHECK	REMEDIAL MEASURES
* Short circuit on the power circuit section. * The value set of S14 parameter is not correct.	* Check the AC/DC converter and the M.F. inverter section. * Check the value of S14.

ALARM MESSAGE : *CURRENT LIMIT*
EMERGENCY STOP : *NO*
CAUSE OF TROUBLE : *Max. DC current is attained. It appears when Dc current is greater than rated current after a certain time, consequently starts the DRIVE OVERLOAD alarm.*

CONTENT OF CHECK	REMEDIAL MEASURES
* Isn't there output short-circuit or grounding? * Is the resonant load well matched? * Abnormal functioning of M.F. inverter (with other messages)? * Is NOMINAL CURRENT set value correct?	* Check the short-circuit of output cables and load. * Compare real and set value of load resistance. * See CONVERTER EMERGENCY indication. * Set correct values (see OPERATION AND REGULATION MANUAL item 3.3.1).

ALARM MESSAGE : *FEEDBACK LACK*
EMERGENCY STOP : *YES*
CAUSE OF TROUBLE : *Voltage feedback signal missing.*

CONTENT OF CHECK	REMEDIAL MEASURES
	* Replace electronic card 585.C2.

ALARM MESSAGE : *SERIAL WATCHDOG*
EMERGENCY STOP : *YES*
CAUSE OF TROUBLE : *Serial communication is abnormal.*

CONTENT OF CHECK	REMEDIAL MEASURES
	* Check the connection of serial line is abnormal

ALARM MESSAGE : *LINE UNDERVOLTAGE*
EMERGENCY STOP : *YES*
CAUSE OF TROUBLE : *The line voltage is low.*

CONTENT OF CHECK	REMEDIAL MEASURES
* The line voltage is lower than the value set by the parameter S22.	

ALARM MESSAGE : *LINE OVERVOLTAGE*
EMERGENCY STOP : *YES*
CAUSE OF TROUBLE : *The line voltage is high.*

CONTENT OF CHECK	REMEDIAL MEASURES
* The line voltage is greater than the value set by the parameter S23.	

ALARM MESSAGE : *START NO ZERO ANGLE*
EMERGENCY STOP : *YES*
CAUSE OF TROUBLE : *Difference between the phases sequence and the sequence of synchronism ramps for the firing pulses generation..*

CONTENT OF CHECK	REMEDIAL MEASURES
* When the enabling command for the regulators and the power section arrived, the angle request signal had a value that commanded the thyristors firing.	* Check the sequence of synchronisms
* When the input Z0 is turned to high value, the microcontroller checks that the angle request signal is null, so that the voltage can rise-up gradually. If it does not happen, the protection intervention will occur and the power section will remain disabled.	* Check the H0 signal referred to GND when Z0=0 volt. If there is a signal (positive or negative) means that there is something not correctly running on 585.C2 or 505.E1 cards.

ALARM MESSAGE : *AUXILIARY OFF*
EMERGENCY STOP : *NO*
CAUSE OF TROUBLE : *The KF output of 585.C2 card is low.*

CONTENT OF CHECK	REMEDIAL MEASURES
* The 585.C2 card supplies is lacking.	* Check the supplies.
* The 585.C2 card is broken.	* Change the card.

ALARM MESSAGE : *1st WORKING PLACE INSERTION*
2nd WORKING PLACE INSERTION
EMERGENCY STOP : *NO*
CAUSE OF TROUBLE : *They aren't alarm, but signals of the plugging in of the working place. They appear when you change working place.*

CONTENT OF CHECK	REMEDIAL MEASURES

ALARM MESSAGE : *RUN CONSENT OFF*
EMERGENCY STOP : *YES*
CAUSE OF TROUBLE : *It appears every time the output KC of the 585.C2 card goes to low.*

CONTENT OF CHECK	REMEDIAL MEASURES

* It is produced by someone of the equipment alarms.	* See the equipment alarms.

ALARM MESSAGE : *WORKING PLACE NOT CORRECT*
EMERGENCY STOP : *NO*
CAUSE OF TROUBLE : *Working place not conforming with the set*
N.B.: *The run is refused.*

CONTENT OF CHECK	REMEDIAL MEASURES
* Does the M.F. change-over (NDKM09) operate correctly?	* To do the manoeuvre manually: to pull up the main lever of the M.F. change-over and then push the little lever where is written "APRE" in red.

ALARM MESSAGE : *SCR OVERTEMPERATURE PROBE*
EMERGENCY STOP : *YES*
CAUSE OF TROUBLE : *Overheating of thyristors heatsinks in M.F.section*

CONTENT OF CHECK	REMEDIAL MEASURES
* Are there obstructions in the water circuit?	* Remove the eventual obstruction or scales
* Isn't the temperature of the distilled water too high?	* Check the thermostat set on distilled water delivery

ALARM MESSAGE : *WATER FLOW SWITCH*
EMERGENCY STOP : *YES*
CAUSE OF TROUBLE : *Poor water flow-rate*

CONTENT OF CHECK	REMEDIAL MEASURES
* Is the water pressure correct? See § 1.1.3 page 8 and § 6 page 39. Is the water pump rotating?	* Replace water pump
* Are there obstructions in the water circuits?	* Remove eventual obstructions (in case of calcareous scales clean the circuit by acid washing)
* Is the water flow-switch correct operating?	* Replace water flow-switch

ALARM MESSAGE : *HEAT EXCHANGER OVERTEMPERATURE*
EMERGENCY STOP : *YES*
CAUSE OF TROUBLE : *Too high temperature on distilled water delivery*

CONTENT OF CHECK	REMEDIAL MEASURES
* Check flow-rate and temperature of the	* Restore correct conditions of industrial

industrial water * Is the heat exchanger scaled?	water * Clean the heat exchanger (see ALFA-LAVAL instructions manual)

ALARM MESSAGE : *MOTOR PUMP PROTECTION*
EMERGENCY STOP : *YES*
CAUSE OF TROUBLE : *The thermal protection of the water pump motor (EC-QM1) is tripped.*

CONTENT OF CHECK	REMEDIAL MEASURES
* The tacked current up is greater than 2.3 A.	* Reset the thermal switch; in case of repetitive trip check the pump tripped
* The impeller pump is blocked.	* Open the impeller of the pump and check.
* One phase of supply is missing.	* Check the supply of the pump.
* The thermal switch is not correctly set or broken.	* Check the thermal switch.
* The input Z2 of the 585.C2 card is broken.	* Change the card.

ALARM MESSAGE : *INSIDE OVERTEMPERATURE*
EMERGENCY STOP : *YES*
CAUSE OF TROUBLE : *Too high temperature inside the cabinet*

CONTENT OF CHECK	REMEDIAL MEASURES
* Isn't the fan thermal switch tripped?	* Reset the thermal switch (in case of repetitive trip check the fan)
* Isn't ambient temperature too high (over than 40°C)?	* Lower the ambient temperature

ALARM MESSAGE : *EARTH LOSS INSULATION*
EMERGENCY STOP : *YES*
CAUSE OF TROUBLE : *Low insulation to ground (transitory or permanent)*

CONTENT OF CHECK	REMEDIAL MEASURES
* Isn't there grounding in internal or external circuits?	* Check ground insulation (use preferably a 500 V megger) and remove the abnormality.
* Isn't the resistivity value of distilled water too low?	* Check distilled water resistivity (normal > 20 kΩcm) and in case replace it.
* Verify set values of the insulation detecting instrument	* Restore correct values: trip current 1.5A; operating time 2 sec.

ALARM MESSAGE : *CONVERTER EMERGENCY*
EMERGENCY STOP : *YES*
CAUSE OF TROUBLE : *This alarm appears every time the Z6 input of the 585.C2 card goes to 0V.*

CONTENT OF CHECK	REMEDIAL MEASURES
* One mushroom button has been pushed.	* Check all mushroom red button.

* The external emergency push-button between the terminals 1 and 2 of X1 terminal board has been pushed.	* Check the emergency push-button.
* The relay NBKA03 is broken.	* Check with an Ohmmeter the relay.
* The input Z6 of the 585.C2 card is broken.	* Change the card.
* The software control of inverter start lost has not correctly worked and hardware protection has tripped.	* See at alarm message "INVERTER START LOST".

ALARM MESSAGE : *INVERTER STAR LOST*
EMERGENCY STOP : *YES*
CAUSE OF TROUBLE :*The controller tries to run the M.F. inverter within 1.2 second from the instant that the Z0 input of the 585.C2 card goes high. If doesn't happen, it waits another 1.2 second and tries to run the M.F. inverter again, if doesn't happen again. If after 1.2 second the signal of START VERIFY doesn't arrive to Z3 input of the 452.C2 card, the running is refused and appear the alarms: RUN CONSENT OFF and INVERTER START LOST.*

CONTENT OF CHECK
* M.F. SCR on short-circuit. Resistance A-K=0Ω
* Resonant load L-C is open.
* The capacitors of the resonant circuit are on short-circuit or broken.
* The coil of the resonant circuit not insulated to ground or is damaged.
* The coaxial cable is short-circuited.
* The firing cards of the M.F. SCR are broken. The resistance between 7-8 and 1-2 ≠ 47 Ω on 912.7A card.
* The starting circuit of M.F. SCR (HB-U1) are short-circuited or opened.
* The firing circuit of SCR (HB-U1) is not OK. See above.
* The starting circuit of M.F. SCR (HB-U3) are short-circuited or opened.
* The firing circuit of SCR (HB-U3) is not OK. See above.
* The output voltage of circuit HB-U2 is not correct. It's greater than 110V or lower than 50 V.
* The fuses on HB-U2 are blown.
* The fuses on ED-FU5 are blown.
* The fuses on HB-FU1, HB-FU2, HB-FU3, HB-FU4 are blown.
* The resistance HB-R1 opened; Capacitors HB-C1 short-circuited or damaged.
* Contactor NDKM05 damaged. It doesn't close the circuit.
* Transformer HB-TV1 damaged. The resistance between 0 and 500 = ∞ or 0.000 Ω measured with milliohmmeter.
* The 190.7 card on MA-AR1 is broken.
* The 400.7 card on MA-AR1 is broken.
* The 400.A card on MA-AR1 is broken.
* The connections on firing cards are wrong.
* The supply on the rack of MA-AR1 is lacking (+24 V).
* General failure of the AC/DC converter.
* The cards: 400.A, 400.7 and 190.7 are not correctly inserted on the connector.
* The power connections of the supply are damaged, HA153, HA155, HA151, HA152.
* The relay NBKA04 is broken.
* The circuit for the protection of the M.F. SCR (R-C snubber and resistance of static voltage distribution) is damaged.

ALARM MESSAGE : *POWER FACTOR C Th PROT 1*

POWER FACTOR C Th PROT 2
EMERGENCY STOP : *YES*
CAUSE OF TROUBLE : *The thermal protections EB-FR1 and/or EB-FR2 are tripped.*

CONTENT OF CHECK	REMEDIAL MEASURES
* The current flows in the capacitors is greater than 70 A.	
* Short-circuit on power factor improvement capacitors.	* Check the circuit.
* Auxiliary contact of the relays EB-FR1 or EB-FR2 is broken.	* Change the relay.
* The input Z0 or Z1 of the 435.A card is broken.	* Change the card.
* The address of the 435.A card is wrong.	* Change the card.

ALARM MESSAGE : *TANK LEVEL*
EMERGENCY STOP : *YES*
CAUSE OF TROUBLE : *Poor distilled water quantity in reservoir*

CONTENT OF CHECK	REMEDIAL MEASURES
	* Check water level and fill the tank

WARNING!
ONLY FOR MOD. PE2061S

In case of intervention of a protection with the subsequent stop of the working post and/or the whole generator, a string indicating the malfunction shall be supplied. In the following paragraphs we show the possible causes and related remedies of the alarms which can be displayed.

If the abnormal operation cannot be linked to none of the alarms indicated in the following paragraphs, please contact the assistance service of our company.

A. THE ALARMS OF THE CARD 450.D3

Here follows the list of the alarms linked to the card 450.D3. They are alarms being internal to the card and external alarms which arrive at its inputs.

1. EEPROM KO

The manufacturer of the EEPROM admits a limited number of writings on the EEPROM (apx. 10^5), once this threshold is exceeded, no more writing is possible.

Exceeded the threshold of 10^5 writings.	TRUE ➔	Replace the EEPROM in the card 450.D3. Identified by the mark IC1. 🡻 END

2. EEPROM ERROR

An error occurred during the phase of storage in memory of a data.

Voltage lack while the operator was entering data through the panel OP?	TRUE ➔	Check the data stored in memory and modify those which do not correspond to the indications of this manual or in the sheet of GENERATOR SET UP enclosed to the generator. 🡻 END
FALSE 🡻		
The card 450.D3 has been replaced	TRUE ➔	Re-enter the data through the functions F of the panel OP described in the 4.1.1. 🡻 END

FALSE
↓

Try a switch off the machine and restart it. If the same alarm occurs, try to replace the EEPROM. See previous alarm.
↓
END

3. RAM CMOS KO

The microprocessor has performed a control of the ram finding some sectors damaged.

RAM damaged. — TRUE → Replace the RAM in the card 450.D3. Identified by the mark IC8. ↓ END

FALSE
↓

Card 450.D3 damaged. — TRUE → Replace THE CARD 450.D3. ↓ END

4. LOW LINE VOLTAGE

SYSTEM CONTROL has detected that the voltage of the three-phase line of power supply of the generator is too low.

Measure the voltage among wires EA141, EA142 and EA143 to the inputs of the fuses EA-FU15. Considered V1 the voltage between EA141 and EA142, V2 the voltage between EA142 and EA143 and V3 the voltage between EA143 and EA141:

$$V1 \cong V2 \cong V3 \leq S\_27$$

TRUE → The voltage of the three-phase line which supplies the generator is not suitable, see paragraph 1.3 CONNECTION TO POWER MAINS. ↓ END

FALSE
↓

Go to page 12 of the OP and read the value set of S_24, S_25 e S_26. These values do not correspond to those indicated in the manual, paragraph **4.2.14 PAGE 11 – SET UP CARD 450.D3** or what is indicated in the sheet of GENERATOR SET UP enclosed to the generator.

TRUE ➔

Enter the values indicated in the manual **4.2.14 PAGE 11 – SET UP CARD 450.D3** or what is indicated in the sheet of GENERATOR SET UP enclosed to the generator.

↓

END

FALSE

↓

Measure the voltage among the wires EA151, EA152 and EA153 to the outputs R0, S0 and T0 of the card EA-A14. Considered V1 the voltage between EA151 and EA152, V2 the voltage between EA152 and EA153 and V3 the voltage between EA153 and EA151, if:

$$V1 \cong V2 \cong V3 = 0$$

TRUE ➔

Verify the status of the fuses EA-FU15 and eventually replace them. Replace the card EA-A14.

↓

END

FALSE

↓

Measure the voltage among the wires EA151, EA152 and EA153 to the inputs of the card EA-A15. Considered V1 the voltage between EA151 and EA152, V2 the voltage between EA152 and EA153 and V3 the voltage between EA153 and EA151:

$$V1 \cong V2 \cong V3 = 0$$

TRUE ➔

Check and eventually replace the cables EA151, EA152 and EA153 of connection between the cards EA-A14 and EA-A15.

↓

END

FALSE

↓

Measure the voltage between the wires EA171 and EA172 to the outputs of the card EA-A16. Considered V1 the voltage between EA171 e EA172:

$$V1 = 0$$

TRUE ➔

Replace the card EA-A16.

↓

END

FALSE

↓

Measure the voltage between the wires EA171 e EA-172 to the inputs E7, GND of the card MB/MC-A01. Considered V1 the voltage between EA171 and EA172: V1 = 0	TRUE ➔	Check and eventually replace the cables EA171 and EA172 of connection between the cards EA-A16 and MB/MC-A01. 🡻 END

FALSE
🡻

Go to page 07 of the OP and read the value displayed of AN7. AN7 = 0	TRUE ➔	Replace THE CARD 450.D3. 🡻 END

FALSE
🡻

Go to page 12 of the OP and read the value set of S_27. S_27 ≠ 360	TRUE ➔	Set S_27 = 360. 🡻 END

5. HIGH LINE VOLTAGE

System control has detected that the voltage of the three-phase line of power supply of the generator is too high.

Measure the voltage among the wires EA141, EA142 and EA143 to the inputs of the fuses EA-FU15. Considered V1 the voltage between EA141 and EA142, V2 the voltage between EA142 and EA143 and V3 the voltage between EA143 and EA141: V1 ≅ V2 ≅ V3 > S_28	TRUE ➔	The voltage of the three-phase line which supplies the generator is not suitable, see paragraph **1.3 CONNECTION TO POER MAINS**. 🡻 END

FALSE
🡻

Go to page 12 of the OP and read the value set of S_24, S_25 e S_26. These values do not correspond to those indicated in the present manual on paragraph **4.2.14 PAGE 12 – SET UP CARD 450.D3** or what is indicated in the sheet of GENERATOR SET UP enclosed to the generator.	TRUE ➔	Enter the values indicated in the present manual on paragraph **4.2.14 PAGE 12 – SET UP CARD 450.D3** or what is indicated in the sheet of GENERATOR SET UP enclosed to the generator. 🡻 END

FALSE ↓

Measure the voltage among the wires EA151, EA152 and EA153 to the outputs R0, S0 and T0 of the card EA-A14. Considered V1 the voltage between EA151 and EA152, V2 the voltage between EA152 and A129 and V3 the voltage between EA153 and EA151, if: V1 ≅ V2 ≅ V3 >> 23 V	TRUE →	Replace the card EA-A14. ↓ END

FALSE ↓

Measure the voltage between the wires EA171 and EA172 to the outputs of the card EA-A16. Considered V1 the voltage between EA171 and EA172: V1 > 10 V	TRUE →	Replace the card EA-A16. ↓ END

FALSE ↓

Go to page 07 of the OP and read the value displayed of AN7. AN7 > 4095	TRUE →	Replace THE CARD 450.D3. ↓ END

FALSE ↓

Go to page 12 of the OP and read the value set of S_28. S_27 ≠ 440	TRUE →	Set S_28 = 440. ↓ END

6. LOW TEMPERATURE

This alarm is not used in this application.

7. HIGH TEMPERATURE

This alarm is not used in this application.

8. MF OVERVOLTAGE

System control has detected that the voltage of Medium frequency at the ends of the inductor (load) is too high. In general the alarm does not appear almost never suddenly but setting a increasing P_{SET}.

Go to page 12 of the OP and read the value set of S_29. This value does not correspond to the indications of the manual on paragraph **4.2.14 PAGE 12 – SET UP CARD 450.D3** or what is indicated in the sheet of GENERATOR SET UP enclosed to the generator.	TRUE ➔	Enter the values indicated in the manual **4.2.14 PAGE 12 – SET UP CARD 450.D3** or what is indicated in the sheet of GENERATOR SET UP enclosed to the generator. ↓ END

FALSE ↓

Go to page 11 of the OP and read the value set of S_15, S_16 and S_17. These values do not correspond to those indicated in the present manual on the paragraph **4.2.13 PAGE 11 – SET UP CARD 450.D3** or what is indicated in the sheet of GENERATOR SETUP enclosed to the generator.	TRUE ➔	Enter the values indicated in the present manual on the paragraph **4.2.13 PAGE 11 – SET UP CARD 450.D3** or what is indicated in the sheet of GENERATOR SET UP enclosed to the generator. ↓ END

FALSE ↓

There has bee a malfunction to the oscillating circuit (inductor + condenser of MF). Short circuit between spikes of the inductor.	TRUE ➔	Eliminate the source of the malfunction or replace the damaged component. Verify that the frequency of work is included between 3.8 and 4.5 kHz. ↓ END

FALSE ↓

The alarm appears upon start-up.	TRUE ➔	Check the integrity of connections of the cables HB/HC131, HB/HC 132 between the oscillating circuit and the TV HB-TV14 (HC-TV14). Check the integrity of the connections of the cables HB/HC121, HB/HC 122 between the card NA/NB-A102 and the TV HB-TV14 (HC-TV14). Check the integrity of the connections of the cables HB/HC107, HB/HC 108 between the card NA/NB-A102 and the card HB/HC-U09. Replace the card NA/NB-A102. Replace the card RA0.2B (HB/HC-U09). Check the integrity of the connections of the cables HB/HC105 between the card HB/HC-U09 (585.A2) and MB/MC-A01 (450.D3). ↓ END

FALSE
↓

The alarm appears during the operation.	TRUE ➔	Same controls than above. Check furthermore if the starter has been disconnected, if a too high P_{SET} has been set. ↓ END

9. DC OVERVOLTAGE

SYSTEM CONTROL has detected that the direct voltage with which the inverter is supplied is too high.

Go to page 15 of the OP and read the value set of S_58. This value does not correspond to the indications of the manual on the paragraph **4.2.17 PAGE 15 – SET UP CARD 450.D3** or what is indicated in the sheet of GENERATOR SET UP enclosed to the generator.	TRUE ➔	Enter the values indicated in the manual **4.2.17 PAGE 15 – SET UP CARD 450.D3** or what is indicated in the sheet of GENERATOR SET UP enclosed to the generator. ↓ END

FALSE
↓

Go to page 11 of the OP and read the value set of S_18, S_19 and S_20. These values do not correspond to those indicated in the present manual on the paragraph **4.2.13 PAGE 11 – SET UP CARD 450.D3** or what is indicated in the sheet of GENERATOR SETUP enclosed to the generator.	TRUE ➔	Enter the values indicated in the present manual on the paragraph **4.2.13 PAGE 11 – SET UP CARD 450.D3** or what is indicated in the sheet of GENERATOR SET UP enclosed to the generator. ↓ END

FALSE
↓

There has been a sudden interruption in the connection of power between the Ac/dc converter and the inverter.	TRUE ➔	Check the connection controlling the cables HA101 and HA102, and if the terminals to which they are fixed are well tightened. ↓ END

FALSE ↓

It is possible that there is a malfunction to the card 505.L1 of control of the Ac/dc converter.	TRUE ➔	Replace the card 505.L1. ↓ END

FALSE ↓

It is possible that there is a malfunction to the card RA0.2B of control of the inverter of MF (HB/HC-U09).	TRUE ➔	Replace the card RA0.2B. ↓ END

FALSE ↓

It is possible that there is a malfunction to the card A44.A4 of drivers interface of the inverter of MF (HB/HC-U09).	TRUE ➔	Replace the card A44.A4. ↓ END

10. BAR VOLTAGE KO

SYSTEM CONTROL has detected that the Ac/dc converter has not given the signal of operation performed.

Go to page 07 of the OP and read the value of R_31. The value of R_31 = 7 and the voltage of KI compared to the mass is 0V.	TRUE ➔	The output KI of the CARD 450.D3 MB-A01 is broken. Replace the card. ↓ END

FALSE ↓

The cable of connection MB061 between the output KI of the CARD 450.D3 and the contact N.O. of the relay NBKA05 is interrupted.	TRUE ➔	Restore the connection. ↓ END

FALSE ↓

The cable of connection NB051 between the contact N.O. of the relay NBKA05 and the terminal of power supply of the relay NBKA07 is interrupted.

TRUE ➔ Restore the connection. ➔ END

FALSE ➔

The cable of connection EC041 between the terminal +24 of the feeder EC-GS031 and the contact N.O. of the relay NCKM02 is interrupted.

TRUE ➔ Restore the connection. ➔ END

FALSE ➔

The cable of connection HA055 between the contact N.O. of the relay NCKM02 and the contact N.O. of the relay NBKA07 is interrupted.

TRUE ➔ Restore the connection. ➔ END

FALSE ➔

The cable of connection HA057 between the contact N.O. of the relay NBKA07 and the contact N.O. of the relay NCKA01 is interrupted.

TRUE ➔ Restore the connection. ➔ END

FALSE ➔

The cable of connection HA054 between the contact N.O. of the relay NCKA01 e the terminal Z1 of the card 505.L1 (HA-U04) is interrupted.

TRUE ➔ Restore the connection. ➔ END

FALSE ➔

The input Z1 of the card 505.L1 (HA-U04) is broken.

TRUE ➔ Replace the card 505.L1 (HA-U04). ➔ END

FALSE ➔

The Ac/dc converter (HA-U04) is broken.

TRUE ➔ Replace the Ac/dc converter HA-U04. ➔ END

FALSE
↓

The inverter of MF (HB/HC-U09) is broken.	TRUE →	Replace the inverter of MF (HB/HC-U09). ↓ END

11. QUICK STOP

SYSTEM CONTROL has detected that the input Z4 of the CARD 450.D3 has been brought to 0V.

The mushroom button has been pressed NB-SB01.	TRUE →	Turn the mushroom, press reset button and restart. ↓ END

FALSE
↓

The circuit between terminals X1-5 and X1-6 has been open.	TRUE →	Restore the connection, press reset button and restart. ↓ END

FALSE
↓

The cable of connection EC041 between the terminal +24 of the feeder EC-GS031 and the contact N.C. of button a mushroom NB-SB01 is interrupted.	TRUE →	Restore the connection. ↓ END

FALSE
↓

The cable of connection NB011 between the contact N.C. of button by mushroom NB-SB01 and the terminal X1-5 is interrupted.	TRUE →	Restore the connection. ↓ END

FALSE
↓

The cable of connection NB021 between the terminal X1-6 and the terminal for power supply of the relay NBKA02 is interrupted.	TRUE →	Restore the connection. ↓ END

FALSE
↓

The cable of connection EC041 between the terminal +24 of the feeder EC-GS031 and the contact N.O. of the relay NBKA02 is interrupted.

TRUE ➔ Restore the connection. ➔ END

FALSE ➔

The cable of connection NB061 between the contact N.O. of the relay NBKA02 and the power supply of the relay NBKA06 is interrupted.

TRUE ➔ Restore the connection. ➔ END

FALSE ➔

The cable of connection EC041 between the terminal +24 of the feeder EC-GS031 and the contact N.O. of the relay NBKA06 is interrupted.

TRUE ➔ Restore the connection. ➔ END

FALSE ➔

The cable of connection NB141 between the contact N.O. of the relay NBKA06 and the input Z4 of the CARD 450.D3 (MC-A01) is interrupted.

TRUE ➔ Restore the connection. ➔ END

FALSE ➔

The cable of connection MC051 between the terminal KG of the CARD 450.D3 (MC-A01) and the terminal Z4 of the CARD 450.D3 (MB-A01) is interrupted.

TRUE ➔ Restore the connection. ➔ END

FALSE ➔

Go to page 07 of the OP and read the value of R_31. The value of R_31 = 1 while the voltage of KG of the CARD 450.D3 (MB-A01) compared to mass is 0V.

TRUE ➔ The output KG of the CARD 450.D3 MB-A01 is broken. Replace the card. ➔ END

FALSE ➔

The input Z4 of the CARD 450.D3 (MB-A01) is broken.

TRUE ➔ Replace THE CARD 450.D3 (MB-A01).
↓
END

FALSE
↓

The input Z4 of the CARD 450.D3 (MC-A01) is broken.

TRUE ➔ Replace THE CARD 450.D3 (MC-A01).
↓
END

FALSE
↓

The relay NBKA02 is broken.

TRUE ➔ Replace the relay NBKA02.
↓
END

12. EXTERNAL ALARM

This alarm is not used in this application.

13. IGBT MODULE PROTECTION

SYSTEM CONTROL has detected an overcurrent in the piloting circuit of the inverter.

Watch the led SD, down at the center, in the card RA0. 2B.

It is ON

TRUE ➔ Measure the voltage to the terminal Z7 of the card 450. D3.

V=0 V

TRUE ➔ Check the continuity of the cables of connection HB/HC113.
↓
END

FALSE
↓

Press reset button and restart.

The alarm does not operate anymore.

FALSE
↓

Replace the card RA0.2B (HB/HC - U09) and restart.

The alarm does not operate anymore.

FALSE
↓

Replace the card 450.D3.
↓
END

FALSE
↓

Replace the card A44.A4 (HB/HC -U09) and restart.

The alarm does not operate anymore.

FALSE
↓

Replace the inverter HB/HC-U09.

↓

END

14. INVERTER THERMAL PROT.

SYSTEM CONTROL has detected an overtemperature of the radiator of the converter.

Watch the led IF, down in the center, in the card RA0. 2B (HB/HC -U09).

It is ON

TRUE ➔

Measure the voltage to the terminal Z8 of the card 450. D3.

V=0 V

TRUE ➔

Check the continuity of the cables of connection HB/HC112.

↓

END

FALSE
↓

Press reset button and restart.

The alarm does not operate anymore.

FALSE
↓

Replace the card 450.D3.

↓

END

FALSE
↓

The cooling water of the inverter is insufficient.

TRUE ➔

Replace the flow gauge NB-SQ111/112. See procedure to replace the flow gauge - end of paragraph.

↓

END

FALSE
↓

Replace the card RA0.2B (HB/HC - U09) and restart.

The alarm does not operate anymore.

FALSE

↓

Replace the card A44.A4 (HB/HC - U09) and restart.

The alarm does not operate anymore.

FALSE

↓

Replace the inverter HB/HC-U09.

↓

END

15. INVERTER OVERCURRENT

SYSTEM CONTROL has detected an overcurrent of the current of MF in output from the inverter.

Watch the led SF, down in the centre, in the card RA0. 2B (HB/HC -U09).

It is ON

TRUE ➔

Measure the voltage to the terminal Z9 of the card 450. D3.

V=0 V

TRUE ➔

Check the continuity of the cables of connection HB/HC111.

↓

END

FALSE ↓

Press reset button and restart.

The alarm does not operate anymore.

FALSE ↓

Replace the card 450.D3.

↓

END

FALSE ↓

Check if there is a loosening in the connections of the coaxial cables between load and reactance of MF. Check the status of the cables of MF.

The alarm does not operate anymore.

TRUE ➔

Tighten the screws of connection between the cables of MF and the reactance of MF (HB/HC-L13). Replace the cables of MF.

FALSE ↓

Check if there is a loosening in the connections of the cables of connection between inverter and reactance of MF. Check the status of the cables.

The alarm does not operate anymore.

TRUE ➔

Tighten the screws of connection bet ween inverter (HB /HC-U09) and reactance of MF (HB /HC-L13). Replace the cables of connection.

FALSE ↓

Check if there is a loosening in the connections between card A44.A4 and CT (Current Transformer) or they don't make a good connections. See sheet WB of the Electrical Sche-me, columns 10,13 and 15 .

The alarm does not operate anymore.

TRUE ➔

Replace the connection terminals, clean the connections, check if each pin are correctly crimped.

FALSE
↓

Replace the card RA0.2B (HB/HC - U09) and restart.

The alarm does not operate anymore.

FALSE
↓

Replace the card A44.A4 (HB/HC - U09) and restart.

The alarm does not operate anymore.

FALSE
↓

Replace the inverter HB/HC-U09.

↓
END

16. FAN MOTOR INVERTER PROT.

The protection of the fan of the inverter has operated or the thermostat of the dissipater of the inverter. Between marks, the references are related to the 2nd working post.

There is an abnormal absorption downstream the magnetothermal EA-QM01 (EA-QM07). Check if something stops the rotation of the blades of the fan.	TRUE ➔	Remove the obstacle which avoids rotation, lubricate or replace the fan. ↓ END
FALSE ↓		
It is broken the magnetothermal EA-QM01 (EA-QM07) to its auxiliary contact.	TRUE ➔	Replace the magnetothermal EA-QM01 (EA-QM07). ↓ END
FALSE ↓		
It has been interrupted the connection between the auxiliary contact of EA-QM01 (EA-QM07) and the thermostat NB-ST07 (NB-ST09).	TRUE ➔	Restore the connection. ↓ END
FALSE ↓		
It has been interrupted the connection between the thermostat NB-ST07 (NB-ST09) and the input XA of the CARD 450.D3 MB-A01 (MC-A01).	TRUE ➔	Restore the connection. ↓ END
FALSE ↓		
The thermostat NB-ST07 (NB-ST09) is broken.	TRUE ➔	Replace the thermostat. ↓ END
FALSE ↓		
The cooling temperature has a temperature exceeding 50°C.	TRUE ➔	The cause may be due to an obstruction in the hydraulic circuit and/or bad operation of the flow gauge NBSQ111 (NB-SQ112). Wash the water circuit and/or replace the flow gauge. For the calibration of the flow gauge see end paragraph. ↓ END
FALSE ↓		

Replace THE CARD 450.D3 MB-A01 (MC-A01).

↓

END

17. THERMAL SWITCH REACTANCE

There has been the intervention of the thermostat of the cooling circuit of the reactance of MF. The temperature of water in output is exceeding 50°C. Between marks the references are related to the 2nd working post.

The temperature of distilled water in the flow of the cooling circuit is greater than 28°C.

TRUE ➔ Supply the water circuit with distillated water with the characteristics indicated in the paragraph 1.4 CONNECTION TO THE COOLINGWATER CIRCUIT.

↓

END

FALSE

↓

Interrupted power supply +24V of the thermostat NB-ST10 (NB-ST12).

TRUE ➔ Restore power supply.

↓

END

FALSE

↓

It has been interrupted the connection between the thermostat NB-ST10 (NB-ST12) and the input XB of the CARD 450.D3 MB-A01 (MC-A01).

TRUE ➔ Restore the connection.

↓

END

FALSE

↓

The thermostat NB-ST10 (NB-ST12) is broken.

TRUE ➔ Replace the thermostat.

↓

END

FALSE

↓

Few water passed in the cooling circuit of the reactance of MF and/or the flow gauge NB-SQ111 (NB-SQ112) does not operate correctly.

TRUE ➔ Check the flow rate of cooling water. Wash the water circuit. Replace the flow gauge, see procedure of calibration end paragraph.

↓

END

FALSE ↓

The inverter HB-U09 (HC-U09) is operating in an abnormal way. It issues a current of MF too high.	TRUE →	Check if the frequency of work is included between 3.8 and 4.5 kHz. Check if the current of MF is greater of the usual value, verify the status of the oscillating circuit. Try to replace the inverter HB-U09 (HC-U09). ↓ END

FALSE ↓

Replace THE CARD 450.D3 MB-A01 (MC-A01).
↓
END

18. WATER FLOW SWITCH

It has operated the flow gauge of the cooling circuit due to insufficient pressure. Between marks the references are related to the 2nd working post.

The pressure of distillated water in flow of the cooling circuit is lower than 0.3 MPa.	TRUE →	Supply the water circuit with distillated water with the characteristics indicated in paragraph 1.4 CONNECTION TO COOLING WATER CIRCUIT. ↓ END

FALSE ↓

There is a loss in the water circuit inside the electric panel or an obstruction.	TRUE →	Repair the loss replacing the damaged pipe or eliminate the eventual obstruction. ↓ END

FALSE ↓

Interrupted the power supply +24V of the flow gauge NB-SQ111 (NB-SQ112).	TRUE →	Restore power supply. ↓ END

FALSE ↓

It has been interrupted the connection between the flow gauge NB-SQ111 (NB-SQ112) and the input XC of the CARD 450.D3 MB-A01 (MC-A01).

TRUE ➔ Restore the connection. ➔ END

FALSE ➔

Broken the flow gauge NB-SQ111 (NB-SQ112).

TRUE ➔ Replace the flow gauge. The procedure of calibration is indicated at the end of the paragraph. ➔ END

FALSE ➔

Replace THE CARD 450.D3 MB-A01 (MC-A01). ➔ END

19. CABINET OVERTEMPERATURE

It has operated the relay of max. temperature (40°C) mounted inside the case of the generator.

The ambient temperature is greater than 35°C.

TRUE ➔ Increase ventilation of the local where it is installed the generator. ➔ END

FALSE ➔

Lack of power supply of the card 847.A0 NA-A031.

TRUE ➔ Restore power supply. ➔ END

FALSE ➔

It has been interrupted the connection between the terminal NO1 of the card 847.A0 NA-A031 and the input XD of the CARD 450.D3 MB-A01 (MC-A01).

TRUE ➔ Restore the connection. ➔ END

FALSE ➔

The card 847.A0 NA-A031 is broken.

TRUE ➔ Replace the card 847.A0 NA-A031.
↓
END

FALSE
↓

Replace THE CARD 450.D3 MB-A01 (MC-A01).
↓
END

20. EARTH LOSS INSULATION

It has operated the relay of dispersion to the mass RMT/8. The dispersion can be transitory or permanent.

The relay NA-P07 has detected a dispersion to the transitory mass.

TRUE ➔ Press reset button and restart.
↓
END

FALSE
↓

Lack of power supply of the relay NA-P07.

TRUE ➔ Restore power supply.
↓
END

FALSE
↓

Interrupted the connections between the Current Transformer EA-TA09 and the inputs 1 and 2 of the relay NA-P07.

TRUE ➔ Restore the connection.
↓
END

FALSE
↓

It has been interrupted the connection between the terminal 13 of the relay NA-P07 and the input XE of the CARD 450.D3 MB-A01 (MC-A01).

TRUE ➔ Restore the connection.
↓
END

FALSE
↓

The relay NA-P07 is broken.

TRUE ➔ Replace the relay NA-P07.
↓
END

FALSE
↓

THE CARD 450.D3 MB-A01 (MC-A01) is broken.	TRUE ➔	Replace THE CARD 450.D3. ↓ END

FALSE
↓

Distilled water has electric conductivity greater than 200μ S/cm.	TRUE ➔	Replace distilled water of the cooling circuit. ↓ END

FALSE
↓

Discharge of the condenser of MF or of inductor to the ground.	TRUE ➔	Restore/replace the condenser of MF and/or the inductor. ↓ END

FALSE
↓

Discharge of the coaxial cable of MF.	TRUE ➔	Restore/replace the cable of MF. ↓ END

FALSE
↓

An error occurred - unbalance in power supply of the generator.	TRUE ➔	Press reset button and restart. ↓ END

21. CABINET FANS THERMAL PROT.

There has been the intervention of the protection of the fan in the exchanger of the electric panel. Between marks the references are related to the 2nd working post.

There is an abnormal absorption downstream the magnetothermal EA-QM03. Check if something stops the rotation of the blades of the fan.

TRUE ➔ Remove the obstacle which avoids the rotation, lubricate or replace the fan.
↓
END

FALSE
↓

It is broken the magnetothermal EA-QM03 or its auxiliary contact.

TRUE ➔ Replace the magnetothermal EA-QM03.
↓
END

FALSE
↓

Lack of power supply to the auxiliary contact of EA-QM03.

TRUE ➔ Restore the connection.
↓
END

FALSE
↓

It has been interrupted the connection between the auxiliary contact of EA-QM03 and the input XF of the CARD 450.D3 MB-A01.

Restore the connection.
↓
END

FALSE
↓

Replace the card 450.D3 MB-A01.
↓
END

22. AC/DC CONV. FAN TH.PROT.

There has been the intervention of the protection of the fan of the AC/DC converter.

There is an abnormal absorption downstream the magnetothermal EA-QM07. Check if something stops the rotation of the blades of the fan.

TRUE ➔ Remove the obstacle which avoids the rotation, lubricate or replace the fan.
↓
END

FALSE
↓

It is broken the magnetothermal EA-QM07 or its auxiliary contact.

TRUE ➔ Replace the magnetothermal EA-QM07.
↓
END

FALSE
↓

Lack of power supply to the auxiliary contact of EA-QM07.

TRUE ➔ Restore the connection.
↓
END

FALSE
↓

It has been interrupted the connection between the auxiliary contact of EA-QM07 and the input XF of the CARD 450.D3 MC-A01.

Restore the connection.
↓
END

FALSE
↓

Replace the card 450.D3 MC-A01.
↓
END

B. THE ALARMS OF THE CARD 505.L1 - AC/DC CONVERTER

Here follows the list of the alarms linked to the card 505.L1, i.e. of the ac/dc converter. They are internal alarms to the card which are communicated to the card 450.D3 through a line MUX.

1. OVERCURRENT AC/DC CONVERTER

Operates immediately after the instantaneous value of the current I exceeds the double of the rating current Inom: I > 2 x Inom.

2. OVERLOAD AC/DC CONVERTER

When the current issued I exceeds the rating current Inom, the microprocessor integrates in the time the overload and operates after T seconds, when there is apx.:
T x (I - Inom) / Inom= 6.
Example: with I = 1.5 x Inom, intervention after 12 seconds apx..

3. THERMAL PROT. AC/DC CONV.

In all the conditions, the microprocessor verifies the signal of the thermostat of overtemperature in the converter.

4. BREAKING OVERLOAD

Operates when there is lack of connection to the resistances HA-131 e HA-132.

5. STARTING OVERLOAD

Function disabled. Should it appear, indicates a bug in the software or on the communication MUX.

6. PHASES LOSS/MINIMUN AC VOLT.

The protection operates to a voltage AC lower than apx. 90 V (point of test L11 at 0 V). The protection compares the medium voltage AC with the instantaneous voltage and operates in case of strong unbalance or of lack of a phase in power supply. The microprocessor starts this control a second after the command of operation Z1

7. W.D. TX FROM 452.L CARD

This alarm is not activated (The software Switch I12 is placed at zero) due to the fact that is redundant with the same type of control performed by the panel OP (card 452.L) to the cards 450.D3.

C. THE ALARMS OF THE CARD 450.L – PANEL OP

Here follows the list of the alarms linked to the card 450.L, i.e. of the panel OP. They are internal alarms to the card which are in the last lower line of the panel. In case of intervention of more alarms, they are in rotation with a delay of permanence of 4 seconds.

1. ERROR ON RECEIVED BYTE

Error in the data reception through the serial line RS232.

Lack of connection between the card 450.3, mounted back to the panel OP, and Host Computer LPE. The cable which starts from the tank connector by 9 pins of the card 450.3, and arrives to the Host Computer LPE shows cold tin plating, or has an interrupted wire.	TRUE ➔	Restore the defective soldering and eventually replace the cable of connection. ↓ END

FALSE
↓

With an oscilloscope measure the signal in output from card 450.3 in the pin 3 and 5 of the tank connector: there is no signal. (You should measure a train of impulses of width –12 /+12 V and frequency 9600 Hz).	TRUE ➔	The output is broken. Replace card 450.3. ↓ END

2. TRASMISSION INTERRUPTED

The transmission of the data has been interrupted by supervisor LPE.

Lack of connection between the card 450.3, mounted back to the panel OP, and the Host Computer LPE. The cable which starts from the tank connector by 9 pins of the card 450.3, and arrives to the Host Computer LPE shows cold soldering or has an interrupted wire.	TRUE ➔	Restore the defective soldering and eventually replace the cable of connection. ↓ END

FALSE
↓

With an oscilloscope measure the signal in output from the card 450.3 in the pin 2 and 5 of the tank connector: there is no signal. (You should measure a train of impulses of width –12 /+12 V and frequency 9600 Hz).	TRUE ➔	The output is broken. Replace card 450.3. ↓ END

3. MESS.NOT RECEIVED FROM HOST

The panel OP has performed 3 attempts of communication with the supervisor LPE with no response.

Lack of connection between the card 450.3, mounted back to the panel OP, and the Host Computer LPE. The cable which starts from the tank connector by 9 pins of the card 450.3, and arrives to the Host Computer LPE shows cold soldering or has an interrupted wire.	TRUE ➔	Restore the defective soldering and eventually replace the cable of connection. ↓ END

FALSE ↓

With an oscilloscope measure the signal in output from the card 450.3 in the pin 3 and 5 of the tank connector: there is no signal. (You should measure a train of impulses of width –12 /+12 V and frequency 9600 Hz).	TRUE ➔	The output is broken. Replace card 450.3. ↓ END

4. FAULT EOT RECEIVED

The panel OP has received some EndOfTransmission not forecast in the protocol of communication on RS232.

Lack of connection between the card 450.3, mounted back to the panel OP, and the Host Computer LPE. The cable which starts from the tank connector by 9 pins of the card 450.3, and arrives to the Host Computer LPE shows cold solderings or has an interrupted wire.	TRUE ➔	Restore the defective solderings and eventually replace the cable of connection. ↓ END

FALSE ↓

With an oscilloscope measure the signal in output from the card 450.3 in the pin 2-5 / 3-5 of the tank connector: there is no signal. (You should measure a train of impulses of width –12 /+12 V and frequency 9600 Hz). The purpose is to verify the good connection.	TRUE ➔	The output is broken. Replace card 450.3. ↓ END

FALSE ↓

There is a conflict in the Software of management of the Generator.	TRUE ➔	Contact LPE. ↓ END

This alarm can operate also in presence of an interference entered in the line of communication. Generally it can be displayed also in conditions of machine in automatic operation and in absence of request from the Host Computer.

5. RS232 SERIAL WATCHDOG

The Watch Dog performed on the serial RS232 to the supervisors LPE has provided a positive response. I.e. the system does not transmit, nor receives any signal. It is displayed when the machine is in standby in the automatic operation.

Lack of connection between the card 450.3, mounted back to the panel OP, and the Host Computer LPE. The cable which starts from the tank connector by 9 pins of the card 450.3, and arrives to the Host Computer LPE shows cold soldering or has an interrupted wire.	TRUE ➔	Restore the defective soldering and eventually replace the cable of connection. ↓ END

FALSE ↓

With an oscilloscope measure the signal in output from the card 450.3 in the pin 2-5 / 3-5 of the tank connector: there is no signal. (You should measure a train of impulses of width –12 /+12 V and frequency 9600 Hz).	TRUE ➔	The output is broken. Replace card 450.3. ↓ END

6. RS485 SERIAL WATCHDOG

The Watch Dog performed on the serial RS485 between the panel OP and the cards 450.D3 has provided positive response. I.e. the system does not transmit, nor receives any signal.

It appears also in the case of connection inverted.

Lack of connection, cables MA101, MA102 and MA103, between the outputs D0, D1 and GND of the card 452.L (MA-AR13) and the inputs D0, D1 and GND of the cards 450.D3 (MB-A01, MC-A01).	TRUE ➔	Restore the connection. ↓ END

FALSE ↓

With an oscilloscope measure the signal in output to terminals D0, D1 and GND of the card 452.L. There is no signal (You should measure a train114of impulses of width 0-5 V and frequency 9600 Hz). The signal of D1 is the negative of D0.	TRUE ➔	Outputs D0 and D1 broken. Replace card 452.L. ↓ END

FALSE ↓

With an oscilloscope measure the signal in input to terminals D0, D1 and GND of the CARD 450.D3. There is no signal (You should measure a train of impulses of width 0-5 V and frequency 9600 Hz).	TRUE ➔	Inputs D0 and D1 broken. Replace card 450.D3. ↓ END

7. N.0X SLAVE NOT CONNECTED

The panel OP does not receive response to interrogations sent to the cards 450.D3 connected to the serial line RS485. The message indicates also which card does not result connected indicating the address: 00 card 450.D3 related to the 1st working post, 01 card 450.D3 related to the 2nd working post.

Lack of connection, cables MA101, MA102 and MA103, between the outputs D0, D1 and GND of the card 452.L (MA-AR13) and the inputs D0, D1 and GND of the cards 450.D3 (MB-A01, MC-A01).	TRUE ➔	Restore the connection. ↓ END

FALSE ↓

With an oscilloscope measure the signal in output to terminals D0, D1 and GND of the card 452.L. There is no signal (You should measure a train of impulses of width 0-5 V and frequency 9600 Hz).

TRUE ➔

Outputs D0 and D1 broken. Replace card 452.L.

↓

END

FALSE

↓

With an oscilloscope measure the signal in input to terminals D0, D1 and GND of the CARD 450.D3. There is no signal (You should measure a train of impulses of width 0-5 V and frequency 9600 Hz).

TRUE ➔

Inputs D0 and D1 broken. Replace card 450.D3.

↓

END

FALSE

↓

The cards 450.D3 have the wrong addresses.

TRUE ➔

Set the correct addresses.

↓

END

8. N.0X CRC ERROR MASTER RS485

The panel OP finds that the CRC sent in queue to a message sent to the cards 450.D3 returns modified.

Lack of connection, cables MA101, MA102 and MA103, between the outputs D0, D1 and GND of the card 452.L (MA-AR13) and the inputs D0, D1 and GND of the cards 450.D3 (MB-A01, MC-A01).

TRUE ➔

Restore the connection.

↓

END

FALSE

↓

With an oscilloscope measure the signal in output to terminals D0, D1 and GND of the card 452.L. There is no signal (You should measure a train of impulses of width 0-5 V and frequency 9600 Hz).

TRUE ➔

Outputs D0 e D1 broken. Replace card 452.L.

↓

END

FALSE

↓

With an oscilloscope measure the signal in input to terminals D0, D1 e GND of the CARD 450.D3. There is no signal (You should measure a train of impulses of width 0-5 V and frequency 9600 Hz).	TRUE ➔	Inputs D0 e D1 broken. Replace card 450.D3. ↓ END

9. EEPROM WRITE KEY NOT PRESENT

You attempted to store in memory a data with the selector MA-SA06 KEYBOARD ENABLE in position "O".

The selector MA-SA06 KEYBOARD ENABLE is in position "O"	TRUE ➔	Turn the selector MA-SA06 KEY-BOARD ENABLE in position "I" and repeat the procedure to store in memory a data. ↓ END

10. FAULT ACK RECEIVED

The panel OP has received too many ACKNOWLEDGE (return receipts) from the supervisor LPE not forecast in the protocol of communication.

There is a "bug" in the Software of management of the Generator.	TRUE ➔	Contact LPE. ↓ END

11. TOO MUCH ENQ RECEIVED

The panel OP has received too many ENQUIRES from supervisor LPE not forecast in the protocol of communication.

There is a "bug" in the Software of management of the Generator.	TRUE ➔	Contact LPE. ↓ END

35. POWER WARNING

Given when $P_{act} > P_{tab} + D$

A warning message will appear on screen if this limit value is given for more than 30 seconds during deposit. The process will **not** be aborted. The warning message will be stored in the black box. P_{act} cannot anyway be exceeded.

P_{act} = actual power
P_{tab} = power value stored in the power/temperature table
D = 10% of P_{tab}

36. POWER LIMIT

Given when $P_{act} > 80$ KW and $T_{act} < 800$ °C

Where:

T_{act} = actual temperature

P_{act} = actual power

37. ZERO POWER TROUBLE

Given when the reactor send the Power ON command and the generator does not send any alarm, but power feed back is 0.

38. POWER FAIL

It is available a dedicated digital input coming for the UPS that will be managed by the software.

The UPS digital input has to be open in case of **POWER FAIL**, closed otherwise.

When there is no power supply to UPS the contact will be open and the Reactor intervention will be as follow:

Status	**Intervention**
PRE N2	warning
PRE H2	back to N2 (2061)jump to POST H2(2061S)
PROCESS	to POST H2
POST H2	warning
POST N2	warning

Warning means that the message **POWER FAIL** will appear and it will not be possible to run a recipe.

It will be possible to enable/disable this alarm using the software.

The UPS will be connected to TVM8201 (group A item 23 position 6 pls. - refer to manual).

39. POWER/TEMPERATURE TROUBLE WARNING

Given when $P_{req} > P_{tab} + 5$ KW

Where: P_{req} is power calculated by PID in order to react temperature set point.
P_{tab} is power in table for the relevant temperature reset point.

When this WARNING occurs the power is automatically limit to $P_{tab} + 5$ KW for safety reason.

40. TEMPERATURE WARNING

Given when T_{set} - D < T_{act} < T_{set} + D

A warning message will appear on screen if T_{act} remains outside range for more than 30 seconds during deposit. The process will **not** be aborted. The warning message will be stored in the black box.

T_{act} = actual temperature
T_{set} = temperature set point
D = +/-10 °C

41. TEMPERATURE ALARM

Given when T_{set} - D < T_{act} < T_{set} + D

An alarm message will appear on screen if T_{act} remains outside range for more than 60 seconds when sourx/hcl is in VENT/BELL status.
The process will be aborted.
The alarm message will be stored in black box.

T_{act} = actual temperature
T_{set} = temperature set point
D = +/-10 °C

42. GENERATOR RS 232 TROUBLE

Serial line 232 connecting Reactor and Generator has been down for more than one minute.

The RS232 cable is not properly connected or is damaged (see reactor electrical drawing).

43. H2 LEAK SENSORS FAULT

On MP1 unit control, could be shown on display an Alarm Message.
Please see the H2 Leak Sensor Enclosure Manual.

44. ENCLOSURE 1: CALIBRATIONS

Pressure SW **Cooling air (Q-26)** ***Set at 2-3 bar***	**Air flow thermal SW** **(Q-12)** ***Set at 40 degrees***
Exhaust vacuum SW **(Q-27)** ***Set at -3 mbar***	**Shutter plate's cam pressure regulator** **(B-20)** ***Set at 1,5 mbar***
Pressure SW laminar **Flow. (Q-28)** ***Set at 1 mbar***	**Pressure SW** **Bell A warning (A-9)** ***Set at 5 mbar***
Control unit **Thermal SW(A-85)** ***Set at 40 Degrees***	**Pressure SW** **Bell alarm (A-10)** ***Set at 15 mbar***
Pressure SW **Bell B warning (A-68)** ***Set at 5 mbar***	**Vacuum SW** **(S-VSA)** ***Set at -0,6 bar***
Pressure SW **Bell B alarm (A-67)** ***Set at 15 mbar***	**Vacuum SW** **(S-VSB)** ***Set at -0,6 bar***
Thermal regulator **FR1511E (Y-9)** ***Set at 25÷32 degrees***	**Main compressed air press. regulator** **(G-2)** ***Set at 6 bar***
Main Blower motor protector **QM127D** ***Set at 8A(60Hz) Set at 8.5 A (50Hz).***	**Press SW spoiler** **(Q-29)** ***Set at 6 mbar***
Stepping Motor Driver **AP262C(Y-12)** **AP269C(Y-13)** ***Set at 1,2A.***	**C. Air Flow meter** **(G-9)** ***Set at 4 slm***

Laminar Flow motor protector	Vacuum Test Pump motor protector
QM127D	**QM1214D**
Set at 6A(60Hz) Set at 3.6A (50Hz).	***Set at 1A***

45. ENCLOSURE 2: SUPPLIES

Check the correct facilities.
The facilities depends to the Epitaxial Reactor model, to the voltage and frequency, etc.
See the complete and personalize Installation Specifications, that is already supplied to the Customer, before the Reactor delivery. However a copy of the Installation Specifications is enclosed to the Instruction Manual

- **General Equipment Datasheet**

WARNING!

ONLY FOR MOD. PE2061

POWER

Item	Volts	Tolerance	Freq.	Phase	Peak	Normal	KVA	Pow. conn.	Note
Epir. PE2061	400 V 480 V	± 5 %	50 Hz 60 Hz	3 ph + N 3 ph	20 A 20 A	10 A 8 A	5,5	cable	\\
UPS	230 V 115 V	± 5 %	50 Hz 60 Hz	1 ph + N 1 ph + N	10 A 20 A	6 A 10 A	1,2	plug	\\
Epir. PE2061	230 V 115 V	± 5 %	50 Hz 60 Hz	1 ph + N 1 ph + N	10 A 13 A	3 A 6 A	0,7	cable	from UPS
Epic. LF150	400 V 480 V	± 5 %	50 Hz 60 Hz	3 ph 3 ph	275 A 230 A	170 A 150 A	120	cable	\\

THERMAL OUTPUT

Item	In Water	In Exhaust	To Ambient	Other
Epireactor	80,000 Kcal/h avg.	5,000 Kcal/h avg.	5,000 Kcal/h avg.	\\
Epiconverter	8,000 Kcal/h avg.	\\	1,000 Kcal/h avg.	\\

EXHAUST REQUIREMENTS

Epireactor	Material/Size	Flow	Static Press.
Scrubber station A	st.st. 1 1/4"	350 slm	- 2 KPa
Scrubber station B	st.st. 1 1/4"	350 slm	- 2 KPa
Air exhaust	st.st./PVC dia. 250 mm	2,500 c.m./h	- 500 Pa

DI WATER REQUIREMENTS

	Flow	Resistivity	Temp.	Press.	Fitting Size	Fitting Type	Filter
Epic. LF150	1 lt./day (refilling)	> 20 KΩ.cm	room	> 3 psi	3/8"	Swagelok	none

PROCESS COOLING WATER

Item	Flow	Inlet Temp.	Δ Temp. Outlet	Press. +/-	Press. Drop	Fitting Size	Fitting Type	filter
Epir. PE2061	200 lt./min	min 14/ max 24 °C	+ 7 °C	min 300/ max 600 KPa	250 KPa	1 1/2"	BSP fem. or NPT male	250 μ
Epic. LF150	20 lt./min	min 14/ max 24 °C	+ 7 °C	min 300/ max 600 KPa	250 KPa	3/4"	BSP fem. or NPT male	none

BULK & SPECIALTY GASES

Substance	Flow	Purity	Press. +/-	Fitting Size	Fitting Type	Fitting Material	Filter
H2	450 slm	> 6N	> 60 psi	1/2"	VCR female	AISI 316 L st.st.	none
N2	300 slm	> 6N	> 60 psi	1/2"	VCR female	AISI 316 L st.st.	none
HCl	70 slm	> 4N5	> 60 psi	1/4"	VCR female	AISI 316 L st.st.	none
Dope	≤ 1 slm	> 6N	> 60 psi	1/4"	VCR female	AISI 316 L st.st.	none
TCS/TET mix	50 slm	> 3N	> 20 psi	1/2"	VCR female	AISI 316 L st.st.	none

WARNING!

ONLY FOR MOD. PE2061S

POWER

Item	Volts	Tolerance	Freq.	Phase	Peak	Normal	KVA	Pow. conn.	Note
Epir. PE2061	415 V	± 5 %	50 Hz	3 ph	20 A	10 A	5,5	cable	\\
UPS	230 V	± 5 %	50 Hz	1 ph + N	15 A	10 A	2,2	plug	\\
Epir. PE2061	230 V	± 5 %	50 Hz	1 ph + N	8 A	3 A	0,7	cable	from UPS
Epic. IFC 150/2	415 V	± 5 %	50 Hz	3 ph	320 A	190 A	130	cable	\\

THERMAL OUTPUT

Item	In Water	In Exhaust	To Ambient	Other
Epireactor	80,000 Kcal/h avg.	5,000 Kcal/h avg.	5,000 Kcal/h avg.	\\
Epiconverter	8,000 Kcal/h avg.	\\	1,000 Kcal/h avg.	\\

EXHAUST REQUIREMENTS

Epireactor	Material/Size	Flow	Static Press.
Scrubber station A	st.st. 1 1/4"	370 slm	- 1,2 Kpa (- 12 mbar)
Scrubber station B	st.st. 1 1/4"	370 slm	- 1,2 Kpa (-12 mbar)
Air exhaust	st.st./PVC dia. 250 mm	2,500 c.m./h	- 0,5 Kpa (- 5 mbar)

PROCESS COOLING WATER SOFTENED

Item	Flow	Inlet Temp.	Δ Temp. Outlet	Press. +/-	Press. Drop	Fitting Size	Fitting Type	filter
Epir. PE2061	200 lt./min	min 14/ max 24 °C	+ 7 °C	min 300/ max 600 Kpa (3 – 6 bar)	250 Kpa (2,5 bar)	1 1/2"	BSP fem.	250 μ
Epic. IFC 150/2	40 lt./min	min 14/ max 24 °C	+ 7 °C	min 300/ max 600 Kpa (3 – 6 bar)	250 Kpa (2,5 bar)	3/4"	BSP fem.	none

BULK & SPECIALTY GASES

Substance	Flow	Purity	Press. +/-	Fitting Size	Fitting Type	Fitting Material	Filter
H2	500 SLPM	> 6N	>400 Kpa (> 60 psi)	1/2"	VCR female	AISI 316 L st.st.	none
N2	300 SLPM	> 6N	>400 Kpa (> 60 psi)	1/2"	VCR female	AISI 316 L st.st.	none
HCl	70 SLPM	> 4N5	>400 Kpa (> 60 psi)	1/4"	VCR female	AISI 316 L st.st.	none
Dope	≤ 1 SLPM	> 6N	>400 Kpa (> 60 psi)	1/4"	VCR female	AISI 316 L st.st.	none
TCS/TET mix	35/60 gr/min	> 3N	>125 Kpa (> 20 psi)	1/2"	VCR female	AISI 316 L st.st.	none

46. ENCLOSURE 3: BUBBLER CONNECTOR

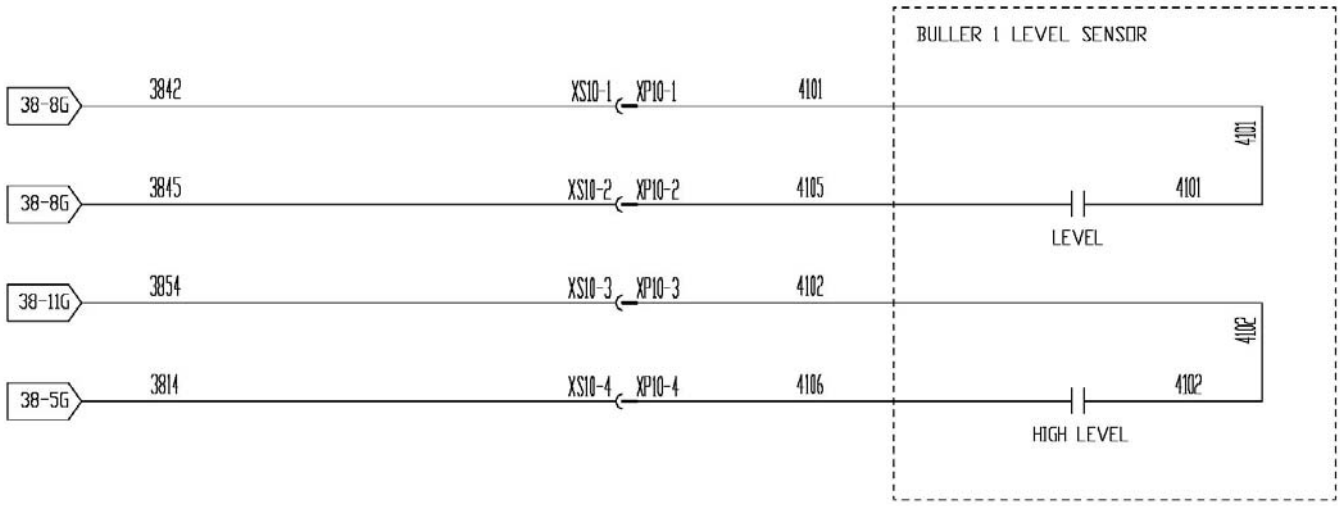

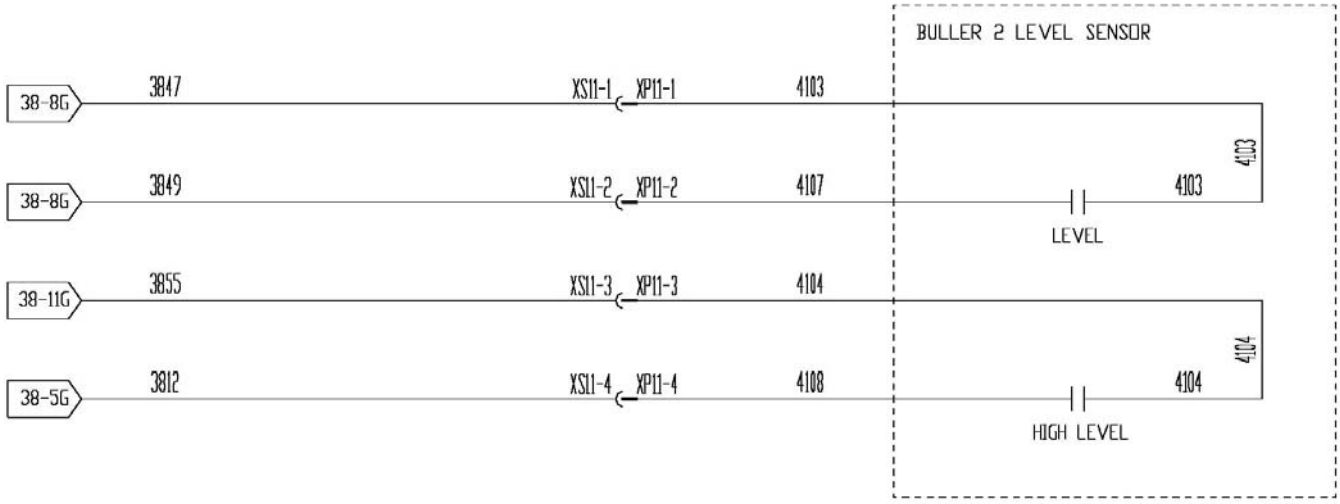

Vol.3

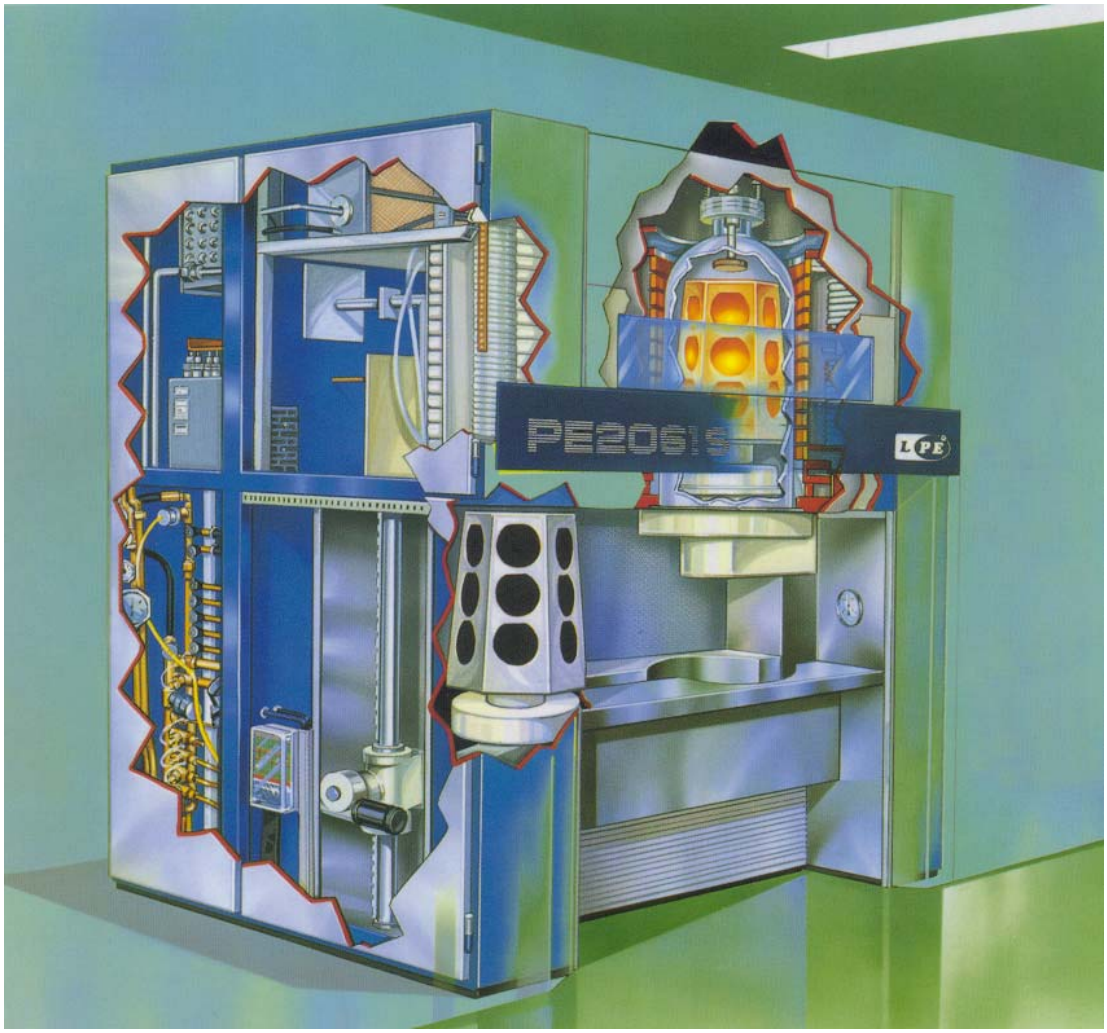

LPE S.p.A.
Powering the future

LPE s.p.a. - Via Falzarego, 8 - 20021 BOLLATE (MILAN) ITALY
Ph. ++39.02.3834151 - Fax ++39.02.38306118 - E-mail: info@lpe-epi.com

INSTRUCTION MANUAL

PE 2061 REL. #11 VOL.3

Chap. (24) Maintenance
Chap. (25) Disposal

Original version
ENGLISH

COPYRIGHT © 2002 **LPE EPITAXIAL TECHNOLOGY**
all rights reserved

No part of these Operating Instructions may be reproduced or used under any form or with any electronic or mechanical method including photocopying, recording with any other method, without the permission of the owner of the Copyright. The drawings are of exclusive ownership.

CHAPTER	GROUP	CHAP/PAGE
24 MAINTENANCE		**24-1**
• How to use this manual		24-1
• Main consumable list		24-3
• Preventive maintenance frequency table		24-4
• Photocell receiver	(A-8)	24-6
• "WARNING"/"ALARM" pressure switch (A)	(A-9) (A-10)	24-7
• Panels, doors and pressure relief panels microsw.	(A-16)	24-11
• Safety switch computer port	(A-21) (A-99)	24-12
• Digital input connection card	(A-23)	24-13
• Laminar flow blower speed regulator	(A-25)	24-14
• Microswitch for lift inhibit station A and B	(A-27) (A-72)	24-15
• Noise filter	(A-29) (A-30)	24-17
• Emergency button	(A-31) (A-90)	24-18
• Main switch	(A-32)	24-19
• Emergency water (OPTIONAL)	(A-34) (A-70)	24-19
• Rotation pedal	(A-41)	24-20
• Digital input connection card	(A-43)	24-22
• Proximity switch amplifier	(A-49)	24-23
• Lamp for loading area	(A-64)	24-24
• "WARNING"/"ALARM" pressure switch (B)	(A-67) (A-68)	24-25
• Photocell emitter	(A-69)	24-29
• Digital input connection card	(A-71)	24-30
• Blowers for computer	(A-82)	24-31
• Blowers for power supply	(A-84)	24-31
• Thermoswitch computer	(A-85)	24-32
• Reactor hydrogen sensor	(A-97)	24-33
• Box connection	(A-105)	24-34
• Cams	(B-8)	24-35
• Sensor	(B-10)	24-42
• Pneumatic cylinder	(B-12)	24-47
• Magnetic limit switch	(B-13)	24-53
• Pressure regulator	(B-20)	24-55
• Flow regulator	(B-24)	24-57
• Shutter plate	(D-1)	24-58
• Exhaust manifold	(D-3)	24-69
• Pin rollers	(D-19)	24-73
• Lifting group	(F-0)	24-74
• Reduction gear	(F-46)	24-76
• Lift motor	(F-50)	24-82
• Potentiometer	(F-57)	24-85
• Compressed air filter / Pressure regulator	(G-1) (G-2)	24-90
• Compressed air pressure switch	(G-4)	24-91
• Air conveyor valve	(G-5)	24-92
• Ball flowmeter for electronic cabinet N2 purge	(G-9)	24-93
• Turn plate group	(H-0)	24-94
• Stainless steel flexible tube (VCR connection)	(H-30)	24-105
• Exhaust valve and exhaust tube	(L-0)	24-110

- Induction coil (N-1) 24-120
- Pyrometer transducer (N-24) 24-127
- Focuser holder (N-25) 24-128
- Gas metering (P-O) 24-129
- Gas panel hydrogen sensor (P-HS) 24-134
- Blower V belt check (Q-6) 24-136
- Cooling air thermal switch (Q-12) 24-142
- Laminar flow (lf) filter (Q-17) 24-143
- Vacuum switch air exhaust (Q-27) 24-147
- Laminar flow pressure switch (Q-28) 24-148
- Pressure switch spoiler (Q-29) 24-149
- Laminar flow blower (Q-51) 24-151
- Vacuum test group (shutter plates vacuum sw A e B) (S-1) 24-154
- Reactor heat exchanger (T-AWE1) 24-156
- Computer heat exchanger (T-AWE2) 24-156
- Bell-jar & quartz & bell-jar cap (V-0) 24-157

25 DISPOSAL..... 25-1

How to use this manual

The parts in the Epitaxial Reactor PE 2061 have been divided in **GROUPS.**

Each **GROUP** is marked with a letter from A to Z.

Each **ITEM** in a group is marked with a number .

The drawings in the manual are numbered according to the relevant group and, when referring to a specific item, according to the item number.

In particular the drawings that refer to a whole group are numbered with a letter only.

The drawings that refer to an item are numbered with a letter and a number.

Likewise an item in a group is identified through the group letter and the item number.

When you are considering a component in the reactor and you want to know which group it belongs to, you always have to refer to the reactor general assembly (Group A) .

You must locate the real position of the component in the reactor general assembly (Group A) .

If the component belongs to a group other than A it will be identified through a letter in the alphabet.

You must then refer to the proper manual section.

If the component belongs to the group A it will be identified through a number only.

(A component or an item in any groups is always identified through a number)

Further information, if available, can be found in another sheet in the relevant manual section.

This sheet will be numbered according to the group and to the item number.

Example : (A-68) indicates the item #68 (P.C.BOARD DIGITAL OUT) in the group A (POWER SUPPLY / DRIVERS GROUP) .

To locate the group Y you must refer to the reactor general assembly (group A).

To locate the item #5 in the group Y you must refer to the page Y in the manual and locate the item 5.

Further information on this item, if available, can be found in the page (Y-5).

CAUTION All maintenance jobs mentioned in this handbook must be carried out by specialized personnel. NOT by the MACHINE OPERATOR.

Specific personal protective equipment to be used during maintenance work is indicated in each chapter, if necessary.

IMPORTANT

The information contained in this manual has been carefully checked.

Nevertheless, due to the reactor complexity, involuntarily faults might be found.

Please inform us in such an evenience, we will appreciate it.

Please also feel free to give us any suggestions about how to render the use of this manual even easier and profitable.

Many thanks in advance for your cooperation.

WARNING - ONLY FOR THE REACTOR WITH THE EMERGENCY WATER CIRCUIT (OPTIONAL)

The emergency water circuit is not interrupted by the main-switch (N° 0), since this is used to guarantee the correct operation of the Reactor (EN 60204 -1 art.5.3.5. "Circuit excluded").

Therefore this circuit is powered also when the main-switch is "OFF", but in accordance to the mentioned standard, it is adequately protected from direct and indirect contacts and it is adequately evidenced (**labels and cables oranges**).

However it is possible to section the circuit through the appropriate switch/fuse-holder, located inside the emergency water box (see the "Schematic Wiring Machine Manual").

NOTE: the "Emergency water circuit" has been activated only if the reactor is in process and there is a leak of cooling water.
More in particular, the "Emergency water circuit" has been activated, if for more than 5 seconds:

- One or both "emergency water thermal switch" (Q-49) are activated (real temperature above 40°C).
- The emergency water pressure switch (T-PCW) detect that water cooling pressure is below 1.5 bar.
- The compress air pressure switch (G4) measure a pressure deficiency
- The UPS is in blackout

⚠ CAUTION

When the "Emergency water circuit" is active, the emergency city water is mixed with the cooling water softened, therefore after the emergency operating, purge the cooling water system by the city water.

Main consumable list

Description	Group	Code	Qty. x year
Silicon rubber hose 5x8 ring group	(C-7)	RH5002P5	**4**
O-Ring 81700 ring group - 80 Sh	(C-8)	GU0818	**4**
O-Ring 81700 shutter plate outer - 55 Sh	(D-2)	GU8170	**48**
O-Ring 4375 Viton exhaust manifold gas side	(D-4)	GU0002	**8**
Seal O-Ring 3043 for 3/8" VCO	(D-5)	GU0069	**16**
Roller NAKD (bearing & shaft), shutter plate	(D-19)	CU0024	**8**
O-Ring 81600 shutter plate inner - 55 Sh	(D-22)	GU8160	**48**
Quartz plate 18 mm precision turnplate	(H-2)	WQ4452	**1**
Pusher for 18 mm quartz plate	(H-3)	RH5033P2	**12**
Spring turntable	(H-4)	RH5033P3	**12**
Threaded ring turntable	(H-5)	RH5033P4	**12**
Pulley 72 XL	(H-6)	RH5033P5	**4**
Shaft w/head monel	(H-7)	RH5033P1	**12**
Gasket for VCR	(H-12)	RA0047	**12**
Seeger ring I26 st.st.	(H-14)	CG0126	**12**
Bearing 6000 - 2 RS	(H-15)	CU0060	**12**
Teflon bush	(H-16)	RH5031P5	**12**
Gasket 0087 turntable shaft	(H-17)	GU0087	**24**
O-Ring 3106 turntable	(H-20)	GU0310	**12**
Gasket 0088 turntable shaft	(H-21)	GU0088	**24**
O-Ring 2093 turntable	(H-23)	GU0209	**12**
Seeger ring I27 st.st.	(H-24)	CG0127	**12**
Hydrogen purge flexible tube	(H-30)	RH4855P1	**8**
Belt 180 XL 037 - turntable	(H-35)	CC0004	**2**
O-Ring 6425 bell-jar cap inner	(I-6)	GU0052	**24**
O-Ring 208 bell-jar cap outer	(I-7)	GU0208	**24**
Teflon ring gasket	(I-8)	RH4925P2	**2**
Spring	(L-1)	RH5051P2	**6**
Graphite shutter	(L-3)	RH5051P5	**6**
O-Ring 2-030 exhaust valve cap	(L-7)	GU0010	**6**
O-Ring 6150 exhaust valve - inner - 55 Sh	(L-10)	GU0740	**48**
O-Ring 6212 exhaust valve - outer - 55 Sh	(L-11)	GU1330	**48**
Metal O-Ring exhaust valve	(L-12)	GU0110	**6**
O-Ring 5 - 330 exhaust tube	(L-16)	GU0330	**6 + (6 OPT.)**
Exhaust flexible tube **(OPTIONAL)**	(L-23)	RA0080	**2**
Belt B44 main blower	(Q-6)	CC0144 for 50Hz (CC0046 for 60Hz)	**2** **(2)**
Quartz support tube precision	(V-4)	WQ4451	**1**

NOTE: this list is **non exhaust**, but it is the main consumable list that LPE recommend, please also consult manual and drawings for planning purposes:

- **quantities might change according to process**
- **for calculation:** 4 weeks = 1 month ; 48 weeks = 1 year

Preventive maintenance frequency table

PM OPERATION	Group	Item ref.	Spare Parts	2Wks	4Wks	8Wks	12Wks	16Wks	24Wks	48Wks	Note
Exhaust manifold: cleaning	D	(D-3)		xxxx							
Exhaust valve: O-Ring replacement	L	(L-9)	(L-10) + (L-11)	xxxx							
Reactor loading station cleaning	//			xxxx							up to 4 weeks
Shutter plate: light cleaning	D	(D-1)		xxxx							
Shutter plate: O-Ring replacement	D	(D-1)	(D-2)+ (D-22)	xxxx							up to 4 weeks
Shutter plate: check and clean the vacuum hole	D	(D-1)		xxxx							
Susceptor centering	V	(V-12)		xxxx							check uniformity data
Turnplate shaft: cleaning	H	(H-7)		xxxx							
Bell-jar cap : cleaning	V	(I-31)			xxxx						up to 3 months
Bell-jar cap : O-Ring replacement	V	(I-31)	(I-6) + (I-7)		xxxx						
Bell-jar, quartzware wet clean	V	(V-13)			xxxx						depends on process
Gas panel cleaning	P	(P-0)			xxxx						
Induction coil: cleaning	N	(N-1)			xxxx						at every bell-jar change
Lift group clean	F	(F-0)			xxxx						
Lift group lubrication	F	(F-0)			xxxx						
Pyrometer lens cleaning	N	(N-22)			xxxx						
Quartz windows cleaning	N	(N-3)			xxxx						
Temperature: check values	Chap. 18				xxxx						
Transfer switch contact check (**ONLY FOR PE2061**)	Generator				xxxx						
Turnplate shaft: replacement	H	(H-7)	(H-7) + (H3, 4, 5, 12, 14, 15, 16, 17, 20, 21, 23, 24)			xxxx					
Blower V-belt check	Q	(Q-6)					xxxx				
Exhaust manifold: O-Ring replacement	D	(D-3)	(D-4) + (D-5)				xxxx				
Hydrogen purge flexible tube: replacement	H	(H-30)	(H-30) + (H12)				xxxx				
LF filter check	Q	(Q-17)					xxxx				
Line insertion contactor: contact check (**ONLY FOR PE2061**)	Generator	NDKM03					xxxx				
Power factor capacitor check (**ONLY FOR PE2061**)	Generator	EB-C2/3					xxxx				
Ring group : gasket tube replacement	V	(C-1)	(C-7)				xxxx				
Ring group : O-Ring replacement	V	(C-1)	(C-8)				xxxx				
Exhaust tube: O-Ring replacement	L	(L-13)	(L-16)					xxxx			
Exhaust valve calibration	L	(L-9)						xxxx			
Exhaust valve: cleaning	L	(L-9)						xxxx			
Exhaust valve: maintenance	L	(L-9)						xxxx			depends on process

PM OPERATION	Group	Item ref.	Spare Parts	2Wks	4Wks	8Wks	12Wks	16Wks	24Wks	48Wks	Note
Exhaust valve: metal O-Ring replacement	L	(L-9)	(L-12)					xxxx			at every valve removal
Exhaust valve: O-Ring replacement	L	(L-9)	(L-7)					xxxx			
Exhaust valve: spring and graphite shutter replac.	L	(L-9)	(L-1) + (L-3)					xxxx			
Blower V-belt replacement	Q	(Q-1)	(Q-6)						xxxx		replace if worn out
Motor group: pulley replacement	H	(H-33)	(H-6)						xxxx		
Pin roller: replacement	D	(D-1)	(D-19)						xxxx		
Bell-jar cap: teflon ring gasket replacement	V	(I-9)	(I-8)							xxxx	
Electronic unit fans check	A	(A-82)								xxxx	
Electronic unit purge flow check	G	(G-9)								xxxx	
Exhaust flexible tube (**OPTIONAL**): replacement	L	(L-13)	(L-23)							xxxx	
Exhaust manifold: maintenance	D	(D-3)								xxxx	depends on process
Locker group maintenance	B	(B-8, 10, 12, 13, 20, 24)								xxxx	control, see (B-8)
Motor group: belt replacement	H	(H-33)	(H-35)							xxxx	
Power generator maintenance	Generator									xxxx	see generator manual
Shield: check belts	M	(M-6)								xxxx	
Shutter plate: maintenance	D	(D-1)								xxxx	
Shield: change belts	M	(M-6)									3 years
Gas Panel: replacement H_2 valves (recommend for safety)	P		(V-3, V-4, V-5, V-6, V-7, V-8)								3 years
Reduction gear (lift group): maintenance	F	(F-46)									4 years
Screws tightening	Generator										1or 2 months after start up

NOTE: this table is **non exhaust**, but it is the PM frequency that LPE recommend, please also consult manual and drawings for planning purposes:

- **frequency might change according to process**
- **for calculation:** 4 weeks = 1 month ; 48 weeks = 1 year

(A-8) PHOTOCELL RECEIVER

(A-8).1 Electric connections: see the "Schematic Wiring Machine Manual" comp.1510H

The photocell receiver ensures that the shield stops when the photocell emitter beam is interrupted. If the shield doesn't go down verify the photocell position by using the reference table.

Contacts status:

Led lit
reading beam unimpeded.
Thus the shield can go down.

Led off
reading beam shadowed.
Thus the shield cannot go down.

In case of any electrical maintenance to be carried out switch off the reactor by means of the reactor main switch.

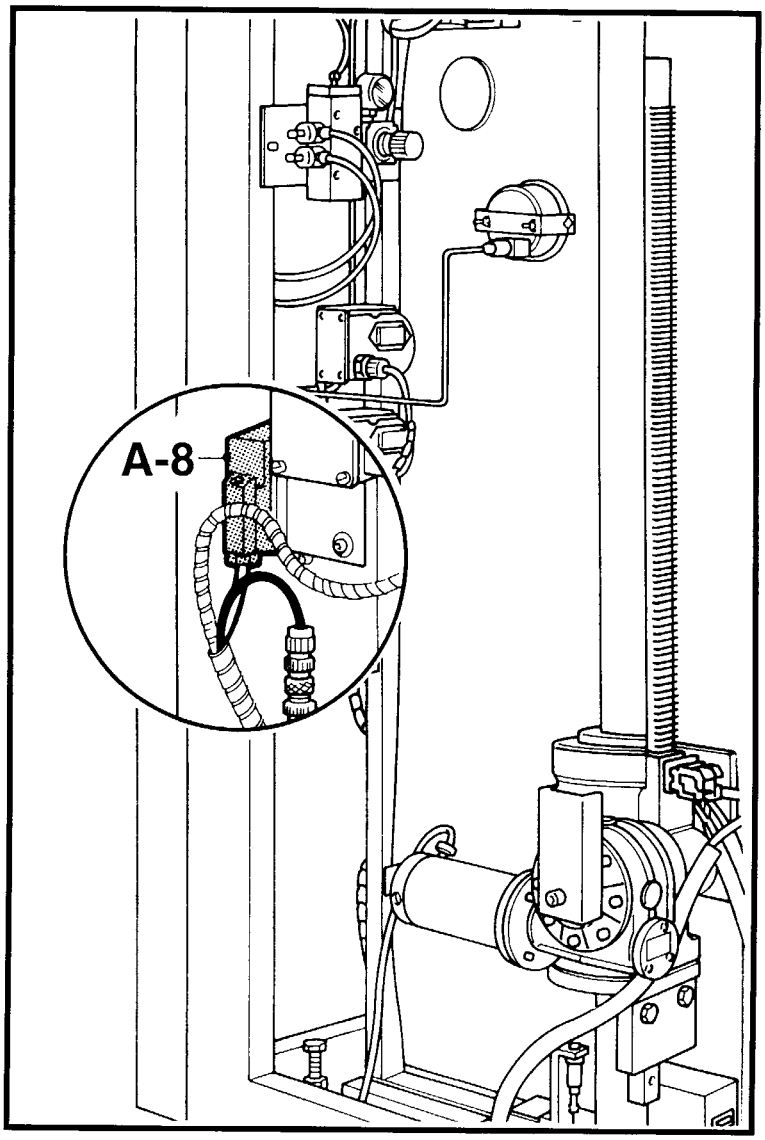

(A-9) (A-10) "WARNING"/"ALARM" PRESSURE SWITCH (A)

(A-9) (A-10).1 Electric connections: see the "Schematic Wiring Machine Manual" comp. SQ393H – SQ394H

(A-9) (A-10).2 Setting procedure

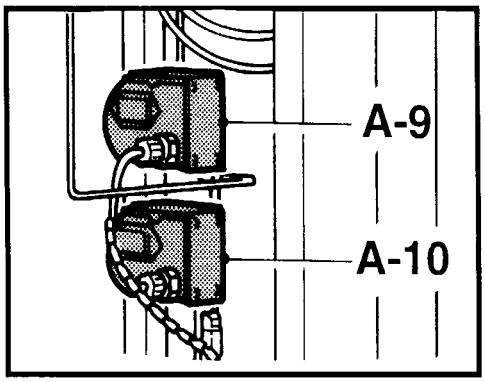

This procedure is identical both for **WARNING** and **ALARM** corresponding to station **A** and **B**:

(A-9) (A-10).2-1 Station A WARNING

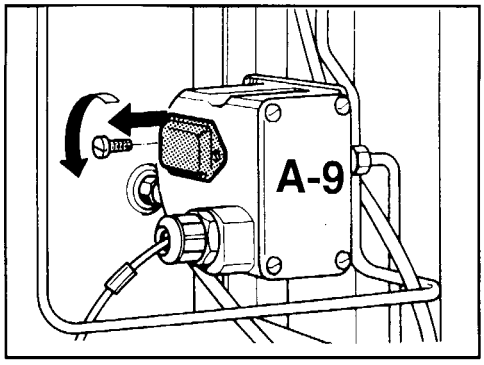

a. Remove the pressure switch **(A9)** cover.

b. Remove the reactor loading area lamp shields

> ⚠ CAUTION
> When the upper shield station has been removed, pay main attention to the clamp pneumatic cylinders. For more safety close the reactor compressed air.

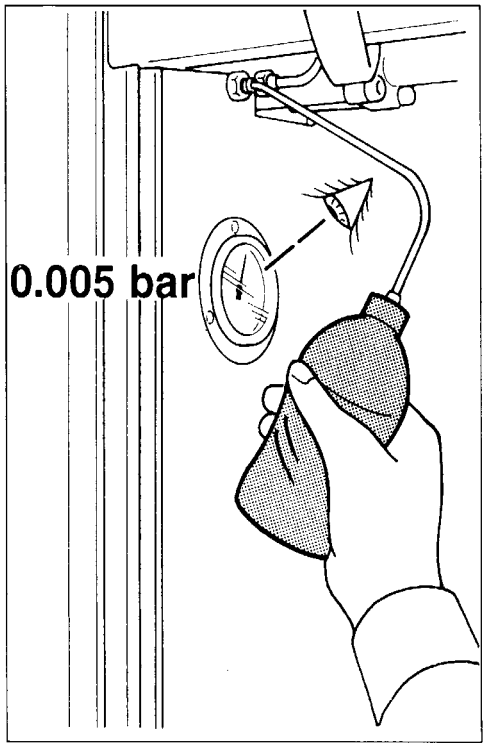

c. Disconnect the tube going to the pressure switch group shown in the picture.

d. Using an empty bottle, set the pressure switch input to pressure of **0.005 bar for WARNING.**

e. Turn the screw until the **WARNING LED** lights begun red.

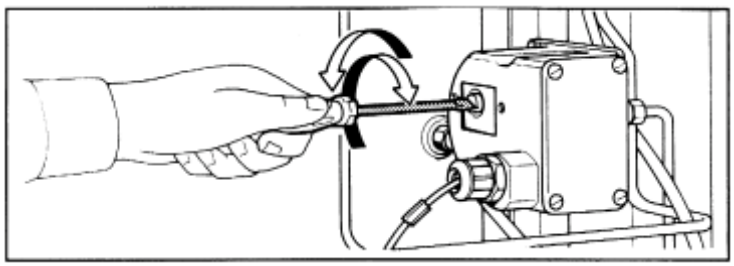

f. Re-check if **LEDs** are switching at the correct pressure values, using the pump but not the screw.

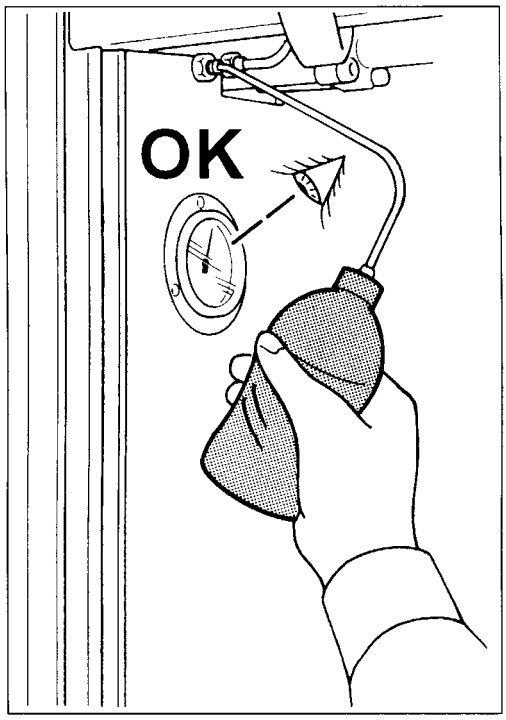

g. If this does not occur, turn the contact screw, maintaining the indicated pressure values.

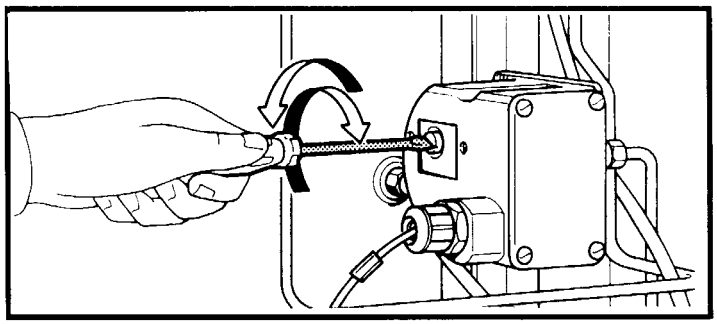

001	PRESS BELL A WARNING	Warning
002	PRESS BELL A ALARM	N2-Alarm
003	THERMAL SWITCH PLATE A	H2-Alarm
004	FLOW SWITCH PLATE A	H2-Alarm
005	THERMAL SWITCH COIL A	H2-Alarm
006	FLOW SWITCH COIL A	H2-Alarm

(A-9) (A-10).2-2 Station A ALARM

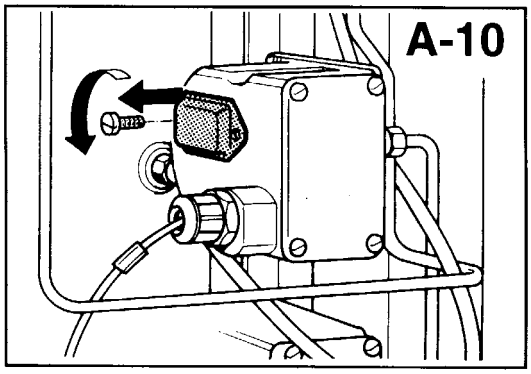

a. Remove the pressure switch **(A10)** cover;

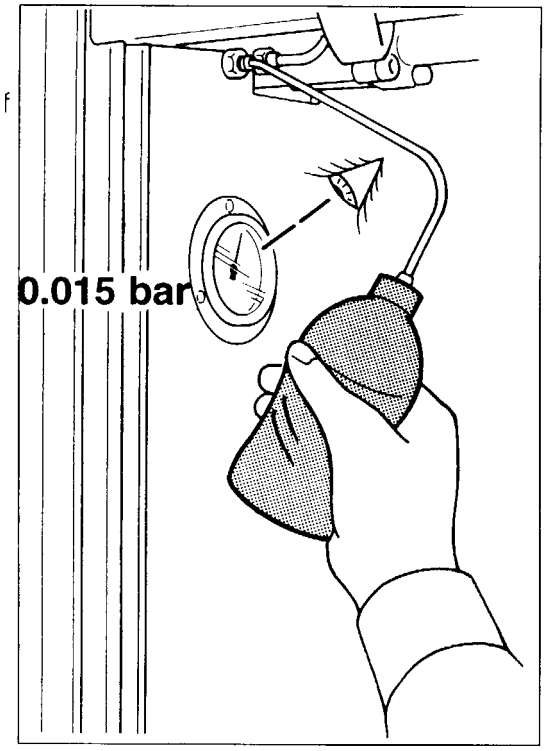

b. Using an empty bottle set the pressure switch input to pressure of **0.015 bar** for **ALARM**

c. Turn the screw until the **ALARM LED** lights.

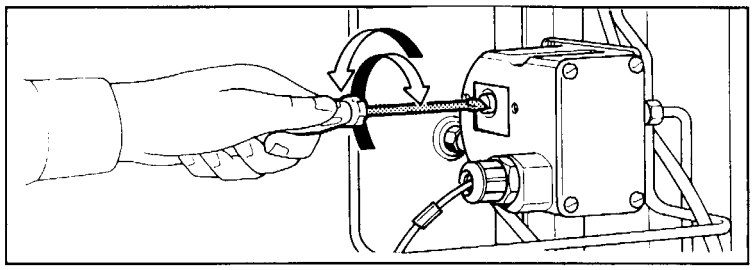

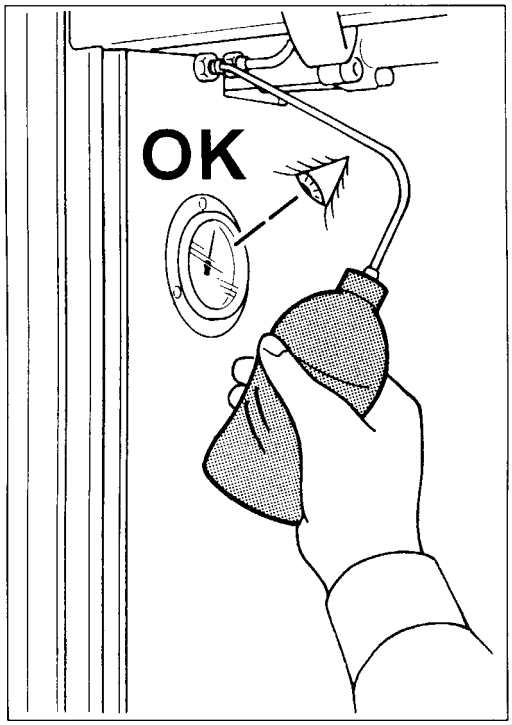

d. Using an empty bottle , but not turning the screw, re-check that the **LEDs** are switching at correct pressures.

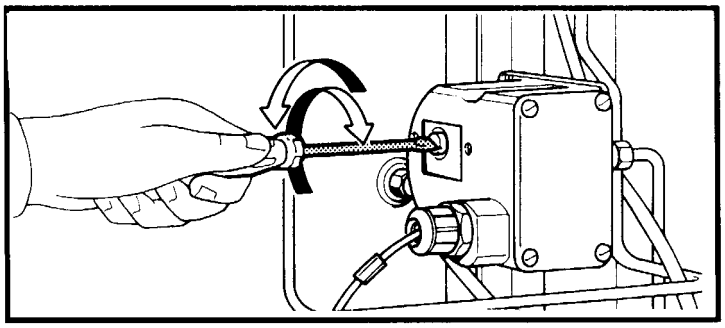

e. If they do not turn red, turn the contact screw to maintain the indicated pressures.

001	PRESS BELL A WARNING	Warning
002	PRESS BELL A ALARM	N2-Alarm
003	THERMAL SWITCH PLATE A	H2-Alarm
004	FLOW SWITCH PLATE A	H2-Alarm
005	THERMAL SWITCH COIL A	H2-Alarm
006	FLOW SWITCH COIL A	H2-Alarm

(A-9)(A-10) Controls :

Don't forget to connect back the tube going to the pressure switch group.

(A-16) PANELS, DOORS AND PRESSURE RELIEF PANELS MICROSWITCH

(A-16).1 Electric connections: see the "Schematic Wiring Machine Manual" comp. SQ322D to SQ324H

(A-16).2 Procedure T13 (Panels, doors and pressure relief panels microswitch)

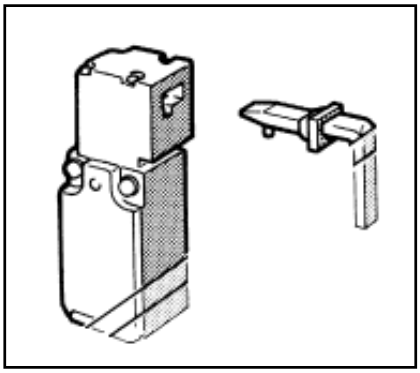

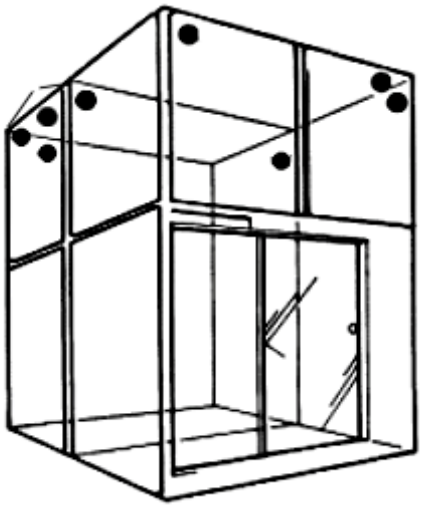

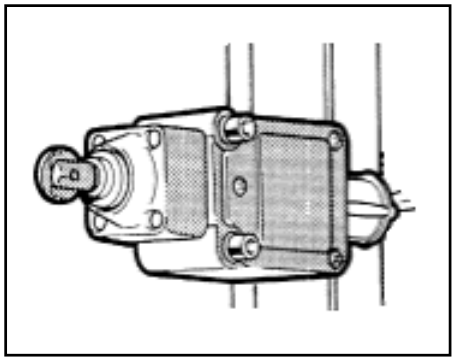

a. Open one of the panels or doors of the upper station or one of the pressure relief panel of the Reactor top at a time and check the series of the microswitch. Make sure that the **RED** alarm is activated on the **ALARMS** page exactly when the panel or the door are open one at the time.

(A-21) (A-99) SAFETY SWITCH COMPUTER PORT

(A-21).1 (A-99).1 Electric connections: see the "Schematic Wiring Machine Manual" comp. AP367C

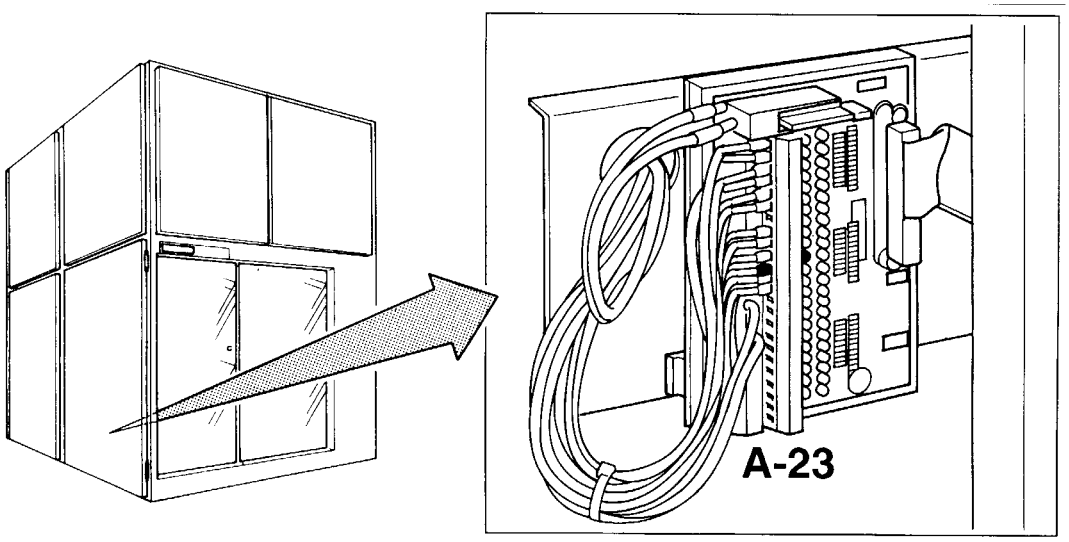

(A-21).2 (A-99).2 Procedure T7 (Door sw computer port) SQ0368I e SQ0367H

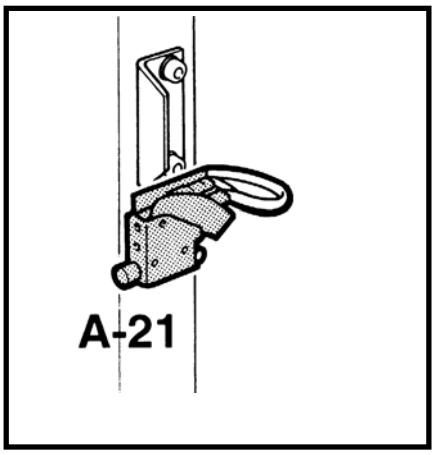

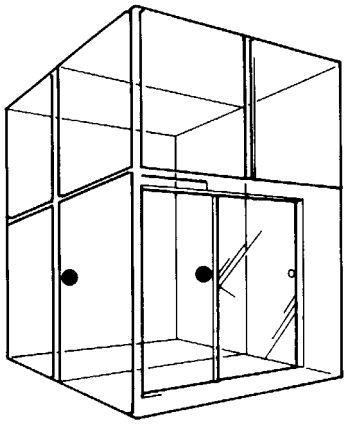

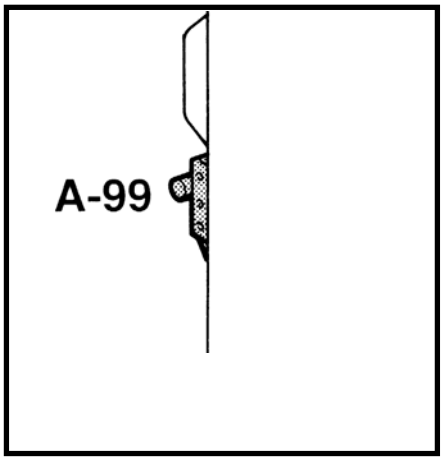

a. Open one door of the electronics housing computer port at a time and check the series of the two micro switches. Make sure that the **RED** alarm is activated on the **ALARMS** page exactly when the door are open one at the time.

b. If the **LED** does not switch on, consult the **"SAFETY SWITCH COMPUTER PORT"** point in the **TROUBLESHOOTING** chapter.

(A-23) DIGITAL INPUT CONNECTION CARD

(A-23).1 Electric connections: see scheme see the “Schematic Wiring Machine Manual” comp. AP367C

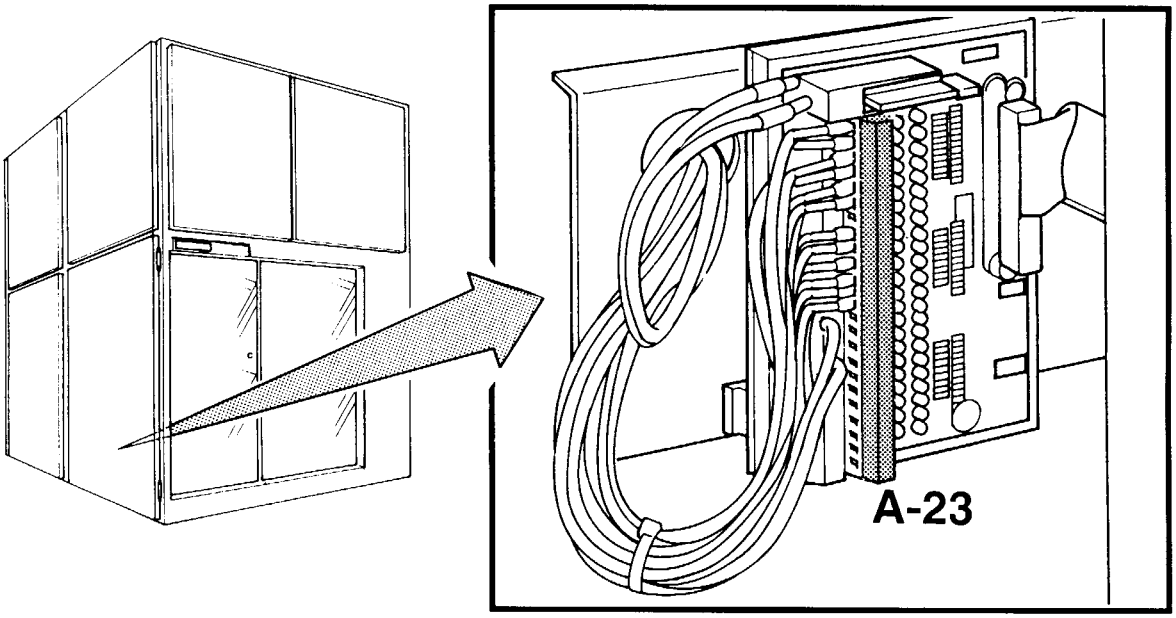

This is one of the three digital input connection board, see the manual for reference. Alarms from 25 to 40 are managed from this board.

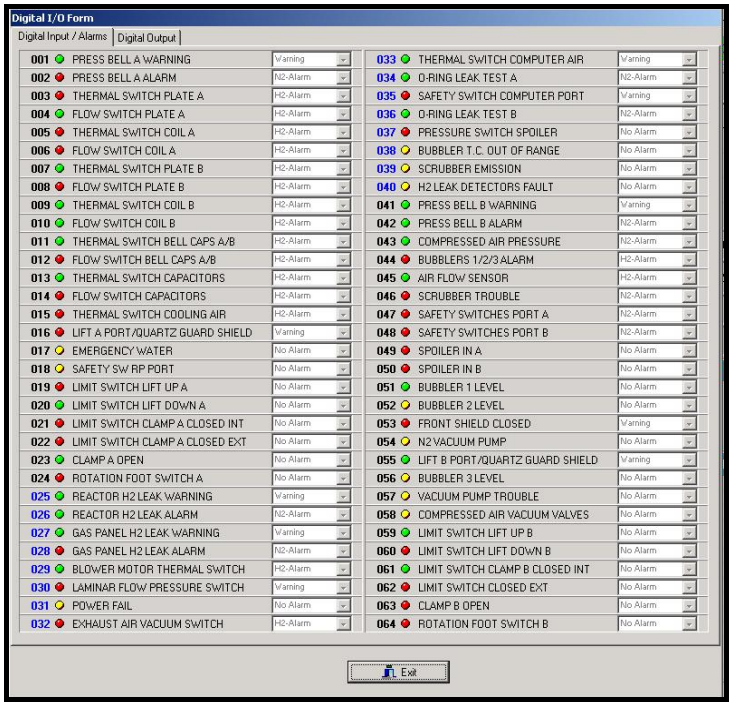

Digital I/O Form

Digital Input / Alarms | Digital Output

001	PRESS BELL A WARNING	Warning		033	THERMAL SWITCH COMPUTER AIR	Warning	
002	PRESS BELL A ALARM	N2-Alarm		034	O-RING LEAK TEST A	N2-Alarm	
003	THERMAL SWITCH PLATE A	H2-Alarm		035	SAFETY SWITCH COMPUTER PORT	Warning	
004	FLOW SWITCH PLATE A	H2-Alarm		036	O-RING LEAK TEST B	N2-Alarm	
005	THERMAL SWITCH COIL A	H2-Alarm		037	PRESSURE SWITCH SPOILER	No Alarm	
006	FLOW SWITCH COIL A	H2-Alarm		038	BUBBLER T.C. OUT OF RANGE	No Alarm	
007	THERMAL SWITCH PLATE B	H2-Alarm		039	SCRUBBER EMISSION	No Alarm	
008	FLOW SWITCH PLATE B	H2-Alarm		040	H2 LEAK DETECTORS FAULT	No Alarm	
009	THERMAL SWITCH COIL B	H2-Alarm		041	PRESS BELL B WARNING	Warning	
010	FLOW SWITCH COIL B	H2-Alarm		042	PRESS BELL B ALARM	N2-Alarm	
011	THERMAL SWITCH BELL CAPS A/B	H2-Alarm		043	COMPRESSED AIR PRESSURE	N2-Alarm	
012	FLOW SWITCH BELL CAPS A/B	H2-Alarm		044	BUBBLERS 1/2/3 ALARM	H2-Alarm	
013	THERMAL SWITCH CAPACITORS	H2-Alarm		045	AIR FLOW SENSOR	H2-Alarm	
014	FLOW SWITCH CAPACITORS	H2-Alarm		046	SCRUBBER TROUBLE	N2-Alarm	
015	THERMAL SWITCH COOLING AIR	H2-Alarm		047	SAFETY SWITCHES PORT A	N2-Alarm	
016	LIFT A PORT/QUARTZ GUARD SHIELD	Warning		048	SAFETY SWITCHES PORT B	N2-Alarm	
017	EMERGENCY WATER	No Alarm		049	SPOILER IN A	No Alarm	
018	SAFETY SW RP PORT	No Alarm		050	SPOILER IN B	No Alarm	
019	LIMIT SWITCH LIFT UP A	No Alarm		051	BUBBLER 1 LEVEL	No Alarm	
020	LIMIT SWITCH LIFT DOWN A	No Alarm		052	BUBBLER 2 LEVEL	No Alarm	
021	LIMIT SWITCH CLAMP A CLOSED INT	No Alarm		053	FRONT SHIELD CLOSED	Warning	
022	LIMIT SWITCH CLAMP A CLOSED EXT	No Alarm		054	N2 VACUUM PUMP	No Alarm	
023	CLAMP A OPEN	No Alarm		055	LIFT B PORT/QUARTZ GUARD SHIELD	Warning	
024	ROTATION FOOT SWITCH A	No Alarm		056	BUBBLER 3 LEVEL	No Alarm	
025	REACTOR H2 LEAK WARNING	Warning		057	VACUUM PUMP TROUBLE	No Alarm	
026	REACTOR H2 LEAK ALARM	N2-Alarm		058	COMPRESSED AIR VACUUM VALVES	No Alarm	
027	GAS PANEL H2 LEAK WARNING	Warning		059	LIMIT SWITCH LIFT UP B	No Alarm	
028	GAS PANEL H2 LEAK ALARM	N2-Alarm		060	LIMIT SWITCH LIFT DOWN B	No Alarm	
029	BLOWER MOTOR THERMAL SWITCH	H2-Alarm		061	LIMIT SWITCH CLAMP B CLOSED INT	No Alarm	
030	LAMINAR FLOW PRESSURE SWITCH	Warning		062	LIMIT SWITCH CLOSED EXT	No Alarm	
031	POWER FAIL	No Alarm		063	CLAMP B OPEN	No Alarm	
032	EXHAUST AIR VACUUM SWITCH	H2-Alarm		064	ROTATION FOOT SWITCH B	No Alarm	

Exit

Switch off the reactor main switch in case of maintenance.

(A-25) LAMINAR FLOW BLOWER SPEED REGULATOR

(A-25).1 Electric connections: see the “Schematic Wiring Machine Manual” comp. UO01210H

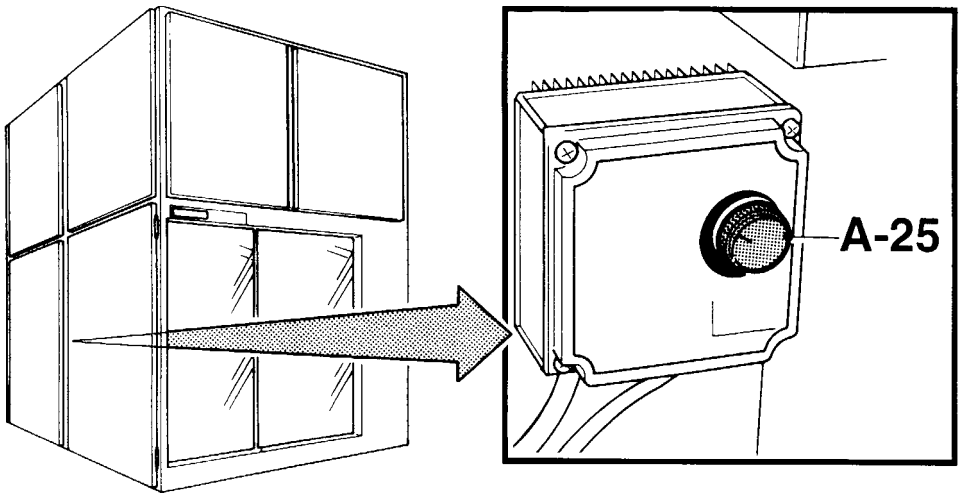

Move the blower speed regulator **(A-25)** clockwise in order to increase the velocity ad counterclockwise in order to reduce it.
In case of laminar speed calibration please see chapter **Q-17.**

CAUTION

For maintenance operations to the laminar flow speed regulator, bring the machine to power level “0, lock the reactor main switch and remove the key.

(A-27) (A-72) MICROSWITCH FOR LIFT INHIBIT STATION A and B

(A-27).1 (B) Electric connections: see the "Schematic Wiring Machine Manual" comp. AP387C
(A-72).1(A) Electric connections: see the "Schematic Wiring Machine Manual" comp. AP397C

(A-27).2/(A-72).2 Procedure T4 (safety sw port A and B lift and quartz-guard photocell)

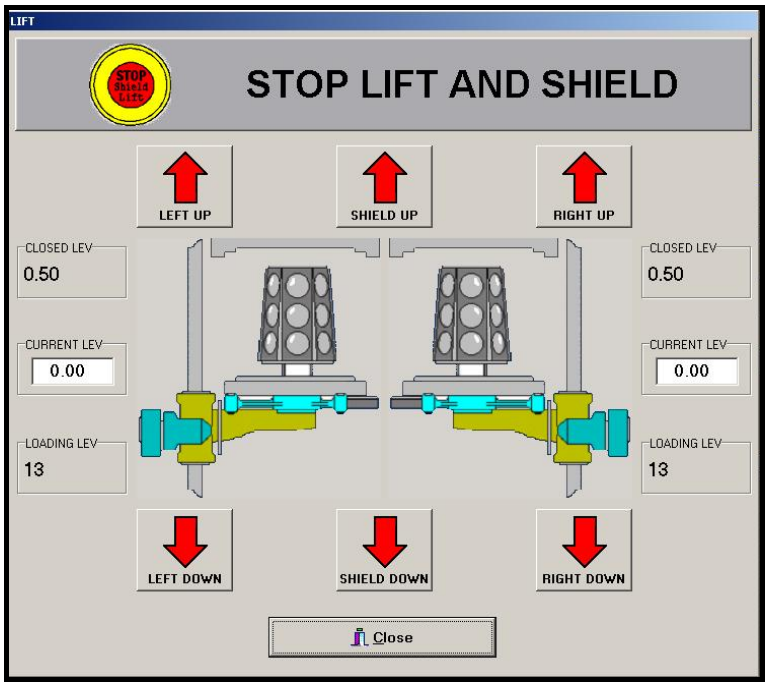

a. Using the Lift command window, move the elevator of the station in question (**A** or **B**).

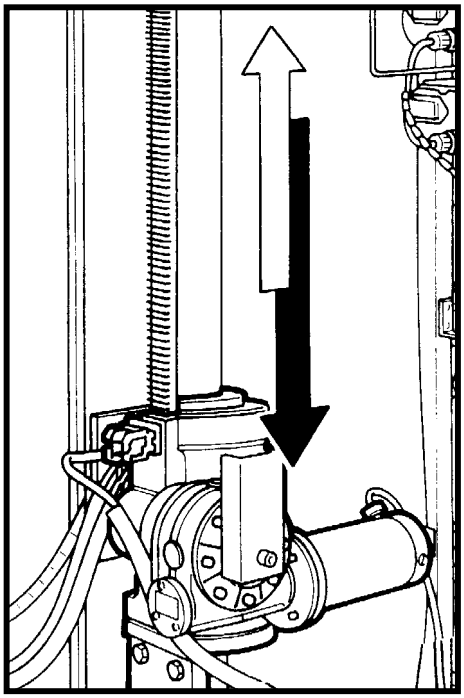

b. Make sure that, when the lateral doors are opened, the elevator stops and the **RED** indicator light illuminates on the **ALARMS** page.

c. Make sure that, when the quartz-guard is backed, the elevator stops and the **RED** indicator light illuminates on the **ALARMS** page.

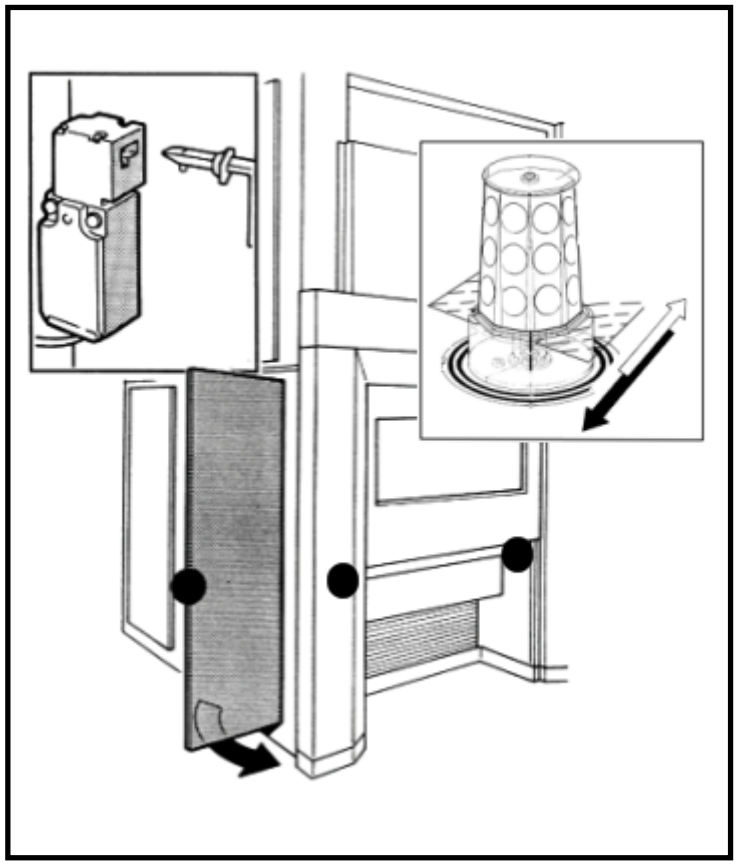

⚠ WARNING

The quartz-guard photocells are always in alarm, if the front semi-table is not in position.

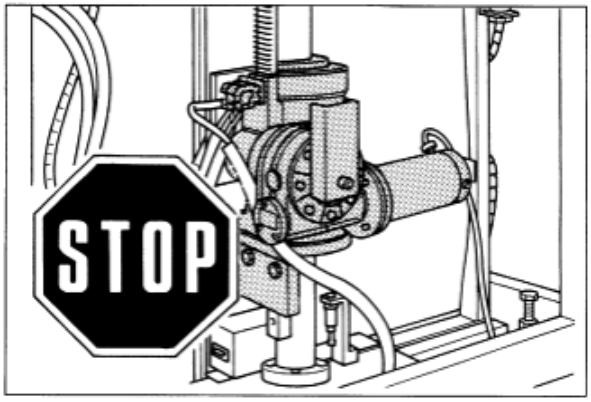

016	LIFT A PORT/QUARTZ GUARD SHIELD	Warning	048	SAFETY SWITCHES PORT B	N2-Alarm
017	EMERGENCY WATER	No Alarm	049	SPOILER IN A	No Alarm
018	SAFETY SW RP PORT	No Alarm	050	SPOILER IN B	No Alarm
019	LIMIT SWITCH LIFT UP A	No Alarm	051	BUBBLER 1 LEVEL	No Alarm
020	LIMIT SWITCH LIFT DOWN A	No Alarm	052	BUBBLER 2 LEVEL	No Alarm
021	LIMIT SWITCH CLAMP A CLOSED INT	No Alarm	053	FRONT SHIELD CLOSED	Warning
022	LIMIT SWITCH CLAMP A CLOSED EXT	No Alarm	054	N2 VACUUM PUMP	No Alarm
023	CLAMP A OPEN	No Alarm	055	LIFT B PORT/QUARTZ GUARD SHIELD	Warning

(A-29) (A-30) CONNECTING NOISE FILTER (230V - 400V or other voltages)

(A-29) (A-30).1 Electric connections: see the "Schematic Wiring Machine Manual" comp. AP119F AP1110F

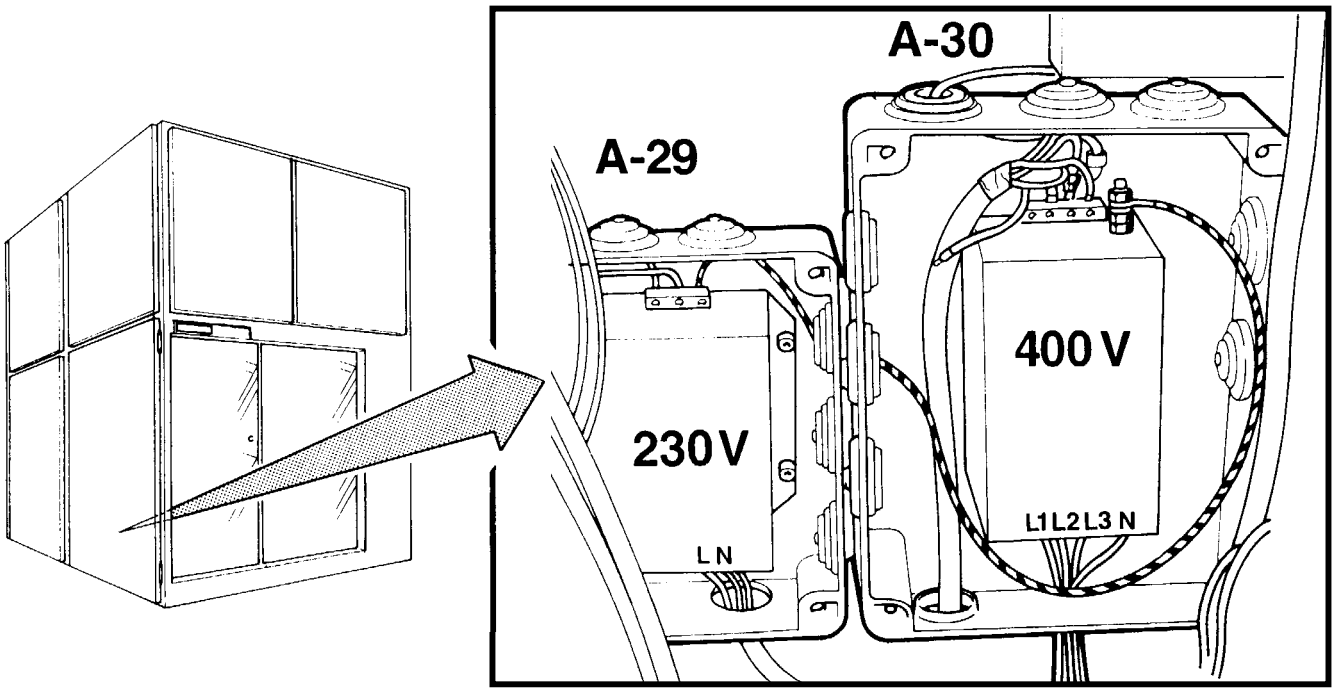

CAUTION

For maintenance operations to the reactor line filter:
- bring the machine to power level "0",
- lock the customer power supply switch;
- remove the key;
- switch off the UPS.

(A-31) (A-90) EMERGENCY BUTTON

(A-31) (A-90).1 Electric connections: see the "Schematic Wiring Machine Manual" comp. SB1312D SQ1310F

Verify periodically the efficiency of the reactor and generator emergency push button.

Emergency Power Off buttons are located:

1 - On the front of the reactor (Clean room) : Reactor EMO
2 - On the rear of the reactor (Gray room) : Reactor EMO
3 - On the front of the power generator : Generator EMO

Reactor Emergency Power Off:
Effects of activating the Reactor Emergency Power Off button:
1 - All power in the reactor and generator is turned off
2 - Nitrogen purge begins (through a normally open valve)
3 - Induction coils are no longer energized
4 - Reactor cooling air shut off
After the Reactor Emergency Power Off button has been activated, the reactor has to be restarted manually - this may damage epi wafers and reactor.
5- Cooling water is maintained

Generator Emergency Power Off:
Effects of activating the Generator Emergency Power Off button:
1 – Power in the generator is turned OFF
2- Reactor induction coil are no longer energized
2 - Reactor power is maintained
3 - Reactor alarm level H is usually triggered
4 - Cooling air is maintained
5 - Cooling water is maintained

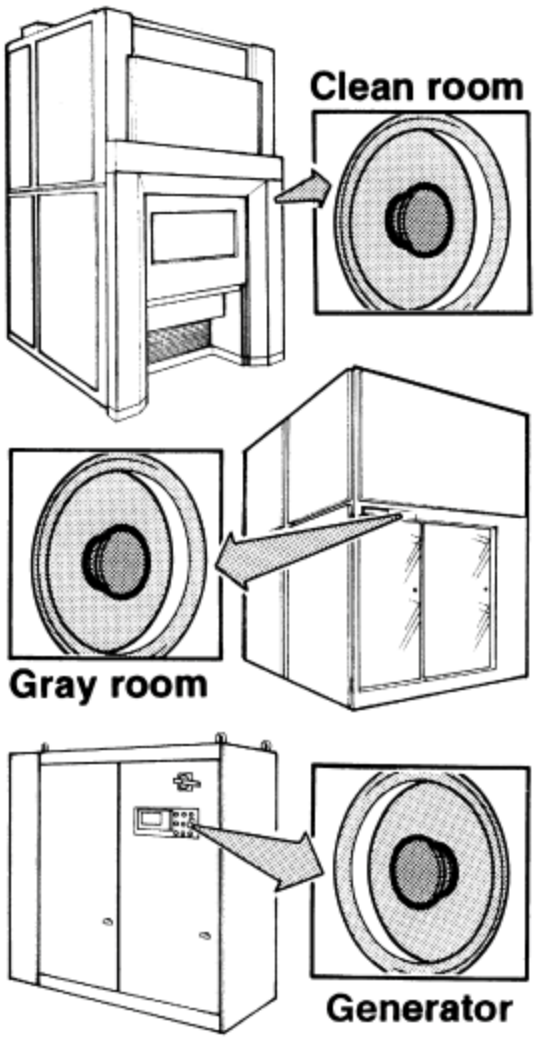

(A-32) CONNECTING MAIN SWITCH

(A-32).1 Connecting main switch for power supply (230V from UPS / 400V – or other voltages): see the "Schematic Wiring Machine Manual" comp. QS119D

CAUTION

To connect or to perform any maintenance to the reactor main switch:
- bring the machine to power level "0";
- lock the customer power supply switches;
- switch off the UPS.

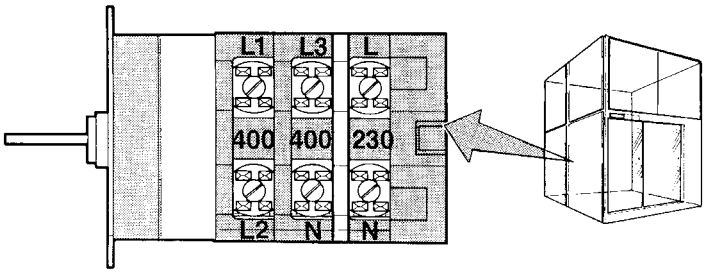

(A-34) (A-70) EMERGENCY WATER CIRCUIT (OPTIONAL)

(A-34) (A70) .1 Electric connections: see scheme RH4847E.. This circuit is available **only** if is available the "Emergency water kit".

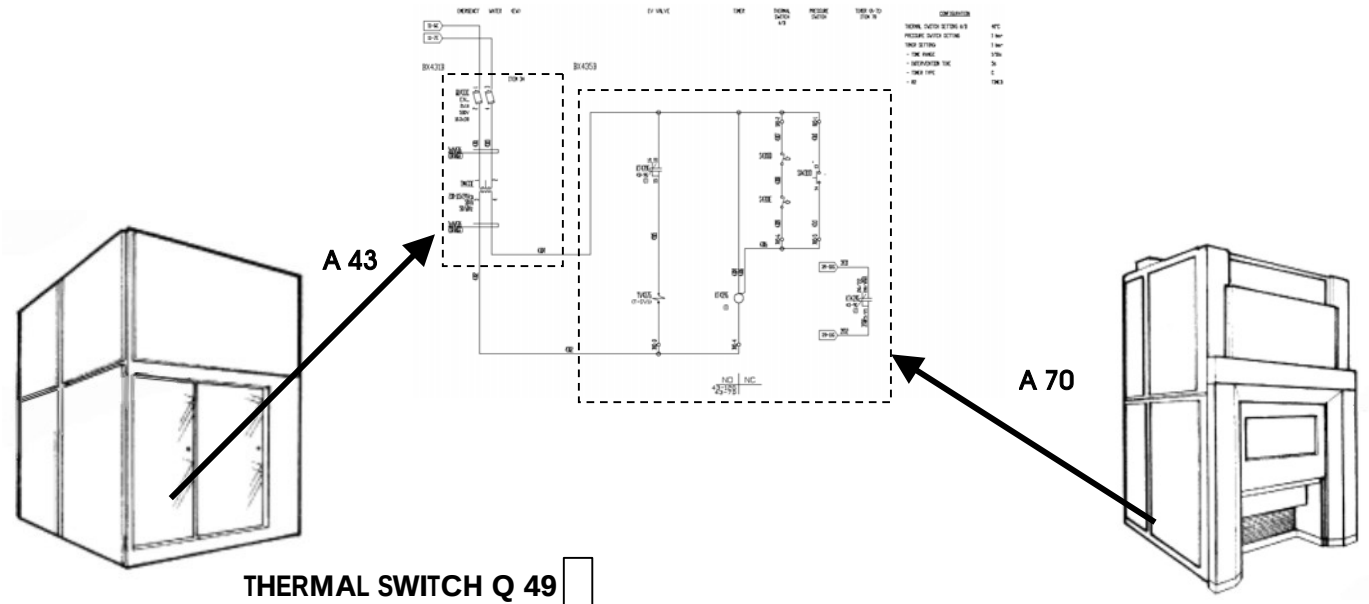

THERMAL SWITCH Q 49

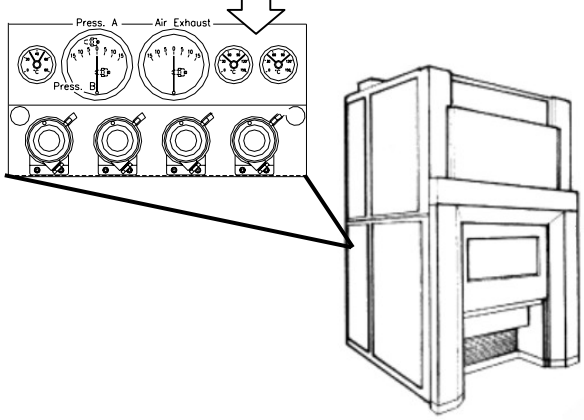

CAUTION

To connect or to perform any maintenance to the reactor main switch:
- close the emergency water input;
- bring the machine to power "0";
- lock the customer power supply switches
- switch off the UPS

(A-41) ROTATION PEDAL

Electric connections: see the “Schematic Wiring Machine Manual” comp. AP397C for station A

Electric connections: see the “Schematic Wiring Machine Manual” comp. AP387C for station B

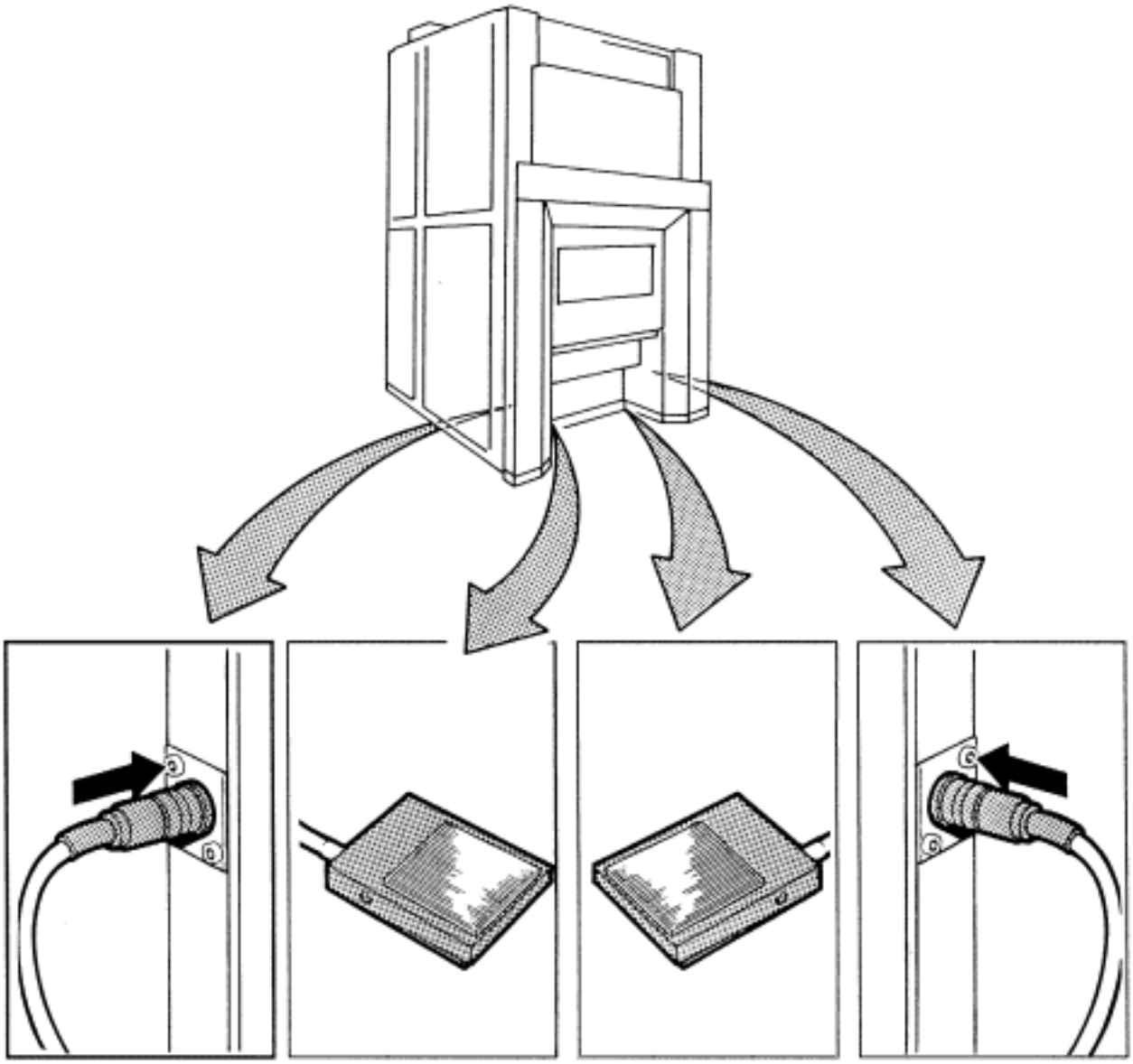

see wiring comp. SQ3814H
(side A)

see wiring comp. 3914H
(side B)

(A-41).1 Procedure T5 (rotation foot switch A/B)

a. While the shield is closed and the shutter-plate open, press the pedal (**A** or **B**) and check if:

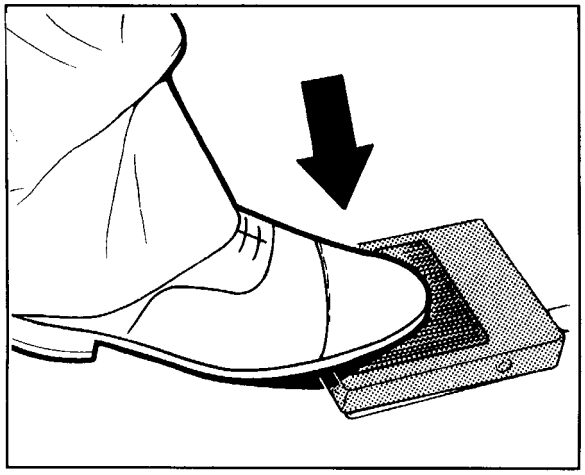

1 - the rotation rotates at **4 revs/min.** By using as reference the cut on the pulley, which can be viewed through the inspection window on the fiberglass guard, and a timer verify the correctness of rotation speed.

2 - Check that the relevant **LED (23)** and (**63**) becomes **GREEN** on the **ALARMS/DIGITAL INPUT** page station when the pedal is pressed.

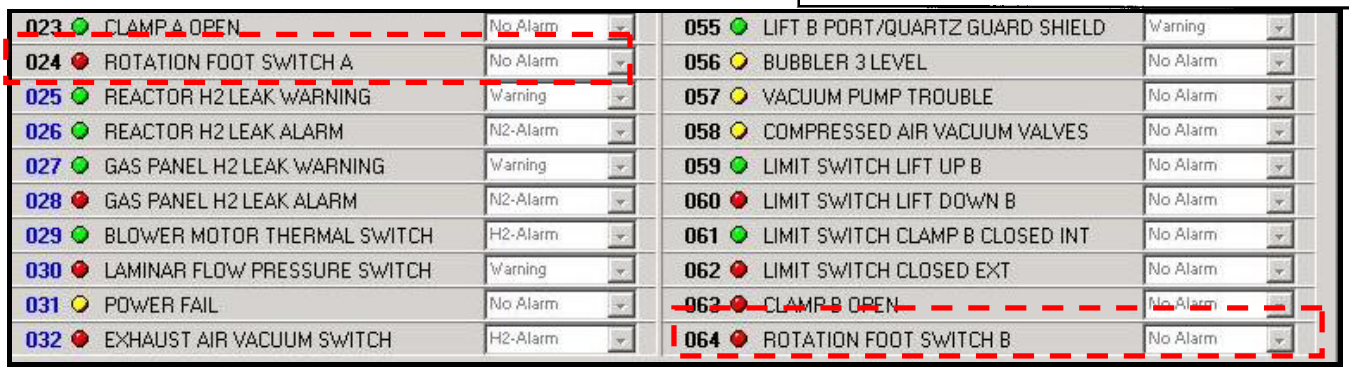

023	CLAMP A OPEN	No Alarm	055	LIFT B PORT/QUARTZ GUARD SHIELD	Warning
024	ROTATION FOOT SWITCH A	No Alarm	056	BUBBLER 3 LEVEL	No Alarm
025	REACTOR H2 LEAK WARNING	Warning	057	VACUUM PUMP TROUBLE	No Alarm
026	REACTOR H2 LEAK ALARM	N2-Alarm	058	COMPRESSED AIR VACUUM VALVES	No Alarm
027	GAS PANEL H2 LEAK WARNING	Warning	059	LIMIT SWITCH LIFT UP B	No Alarm
028	GAS PANEL H2 LEAK ALARM	N2-Alarm	060	LIMIT SWITCH LIFT DOWN B	No Alarm
029	BLOWER MOTOR THERMAL SWITCH	H2-Alarm	061	LIMIT SWITCH CLAMP B CLOSED INT	No Alarm
030	LAMINAR FLOW PRESSURE SWITCH	Warning	062	LIMIT SWITCH CLOSED EXT	No Alarm
031	POWER FAIL	No Alarm	063	CLAMP B OPEN	No Alarm
032	EXHAUST AIR VACUUM SWITCH	H2-Alarm	064	ROTATION FOOT SWITCH B	No Alarm

b. If the **LED** does not switch on, consult the **"ROTATION/PHOTOCELL TROUBLE"** point in the **TROUBLESHOOTING** chapter.

(A-43) DIGITAL INPUT CONNECTION CARD

(A-43).1 Electric connections: see the “Schematic Wiring Machine Manual” comp. AP387C

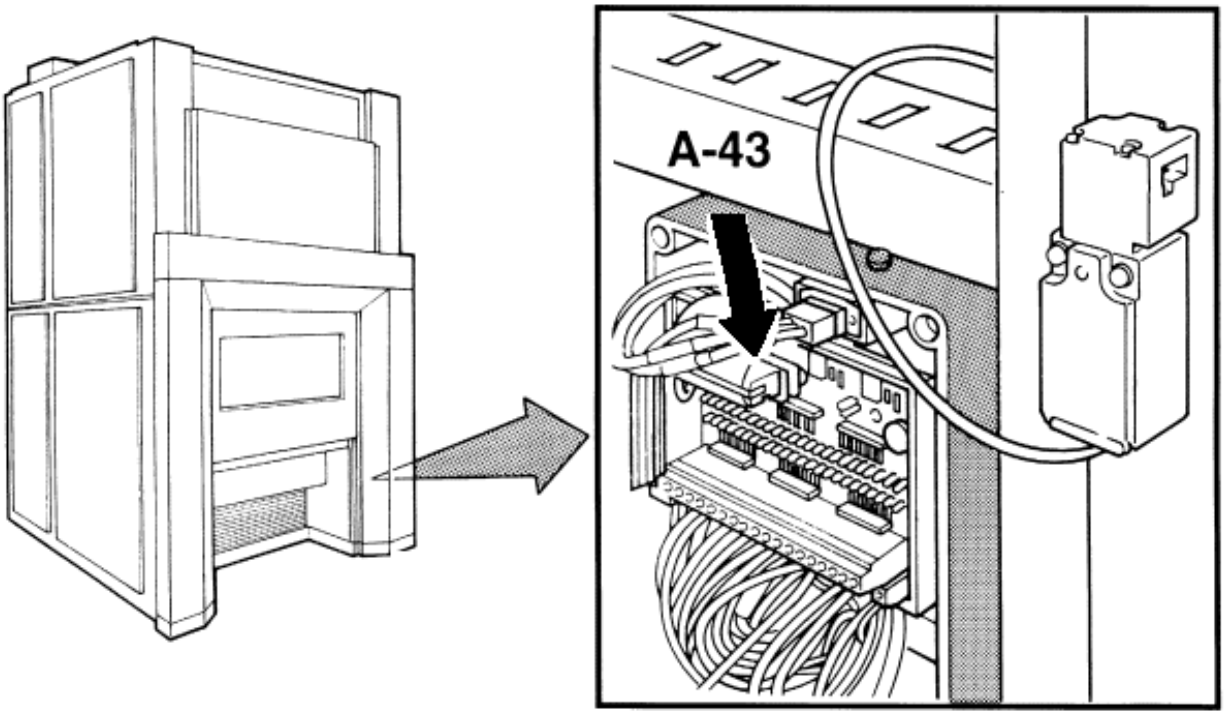

This is one of the three digital input connection board, see the manual for reference.
Alarms from 41 to 64 are managed from this board.

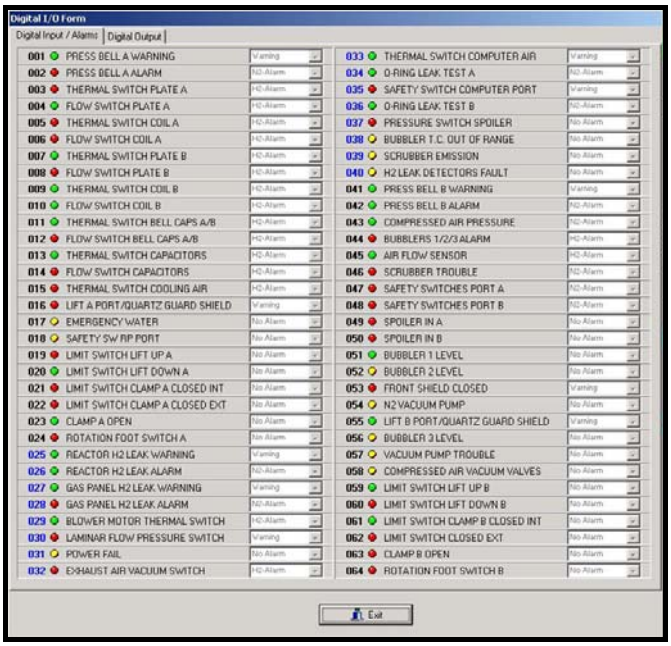

Digital I/O Form

Digital Input / Alarms | Digital Output

001	PRESS BELL A WARNING	Warning		033	THERMAL SWITCH COMPUTER AIR	Warning	
002	PRESS BELL A ALARM	N2-Alarm		034	O-RING LEAK TEST A	N2-Alarm	
003	THERMAL SWITCH PLATE A	H2-Alarm		035	SAFETY SWITCH COMPUTER PORT	Warning	
004	FLOW SWITCH PLATE A	H2-Alarm		036	O-RING LEAK TEST B	N2-Alarm	
005	THERMAL SWITCH COIL A	H2-Alarm		037	PRESSURE SWITCH SPOILER	No Alarm	
006	FLOW SWITCH COIL A	H2-Alarm		038	BUBBLER T.C. OUT OF RANGE	No Alarm	
007	THERMAL SWITCH PLATE B	H2-Alarm		039	SCRUBBER EMISSION	No Alarm	
008	FLOW SWITCH PLATE B	H2-Alarm		040	H2 LEAK DETECTORS FAULT	No Alarm	
009	THERMAL SWITCH COIL B	H2-Alarm		041	PRESS BELL B WARNING	Warning	
010	FLOW SWITCH COIL B	H2-Alarm		042	PRESS BELL B ALARM	N2-Alarm	
011	THERMAL SWITCH BELL CAPS A/B	H2-Alarm		043	COMPRESSED AIR PRESSURE	N2-Alarm	
012	FLOW SWITCH BELL CAPS A/B	H2-Alarm		044	BUBBLERS 1/2/3 ALARM	H2-Alarm	
013	THERMAL SWITCH CAPACITORS	H2-Alarm		045	AIR FLOW SENSOR	H2-Alarm	
014	FLOW SWITCH CAPACITORS	H2-Alarm		046	SCRUBBER TROUBLE	N2-Alarm	
015	THERMAL SWITCH COOLING AIR	H2-Alarm		047	SAFETY SWITCHES PORT A	N2-Alarm	
016	LIFT A PORT/QUARTZ GUARD SHIELD	Warning		048	SAFETY SWITCHES PORT B	N2-Alarm	
017	EMERGENCY WATER	No Alarm		049	SPOILER IN A	No Alarm	
018	SAFETY SW RIP PORT	No Alarm		050	SPOILER IN B	No Alarm	
019	LIMIT SWITCH LIFT UP A	No Alarm		051	BUBBLER 1 LEVEL	No Alarm	
020	LIMIT SWITCH LIFT DOWN A	No Alarm		052	BUBBLER 2 LEVEL	No Alarm	
021	LIMIT SWITCH CLAMP A CLOSED INT	No Alarm		053	FRONT SHIELD CLOSED	Warning	
022	LIMIT SWITCH CLAMP A CLOSED EXT	No Alarm		054	N2 VACUUM PUMP	No Alarm	
023	CLAMP A OPEN	No Alarm		055	LIFT B PORT/QUARTZ GUARD SHIELD	Warning	
024	ROTATION FOOT SWITCH A	No Alarm		056	BUBBLER 3 LEVEL	No Alarm	
025	REACTOR H2 LEAK WARNING	Warning		057	VACUUM PUMP TROUBLE	No Alarm	
026	REACTOR H2 LEAK ALARM	N2-Alarm		058	COMPRESSED AIR VACUUM VALVES	No Alarm	
027	GAS PANEL H2 LEAK WARNING	Warning		059	LIMIT SWITCH LIFT UP B	No Alarm	
028	GAS PANEL H2 LEAK ALARM	N2-Alarm		060	LIMIT SWITCH LIFT DOWN B	No Alarm	
029	BLOWER MOTOR THERMAL SWITCH	H2-Alarm		061	LIMIT SWITCH CLAMP B CLOSED INT	No Alarm	
030	LAMINAR FLOW PRESSURE SWITCH	Warning		062	LIMIT SWITCH CLOSED EXT	No Alarm	
031	POWER FAIL	No Alarm		063	CLAMP B OPEN	No Alarm	
032	EXHAUST AIR VACUUM SWITCH	H2-Alarm		064	ROTATION FOOT SWITCH B	No Alarm	

Exit

Switch off the reactor main switch in case of maintenance.

(A-49) PROXIMITY SWITCH AMPLIFIER

(A-49).1 Electric connections: see the "Schematic Wiring Machine Manual" comp. AP404D for station B and AP404H for station A

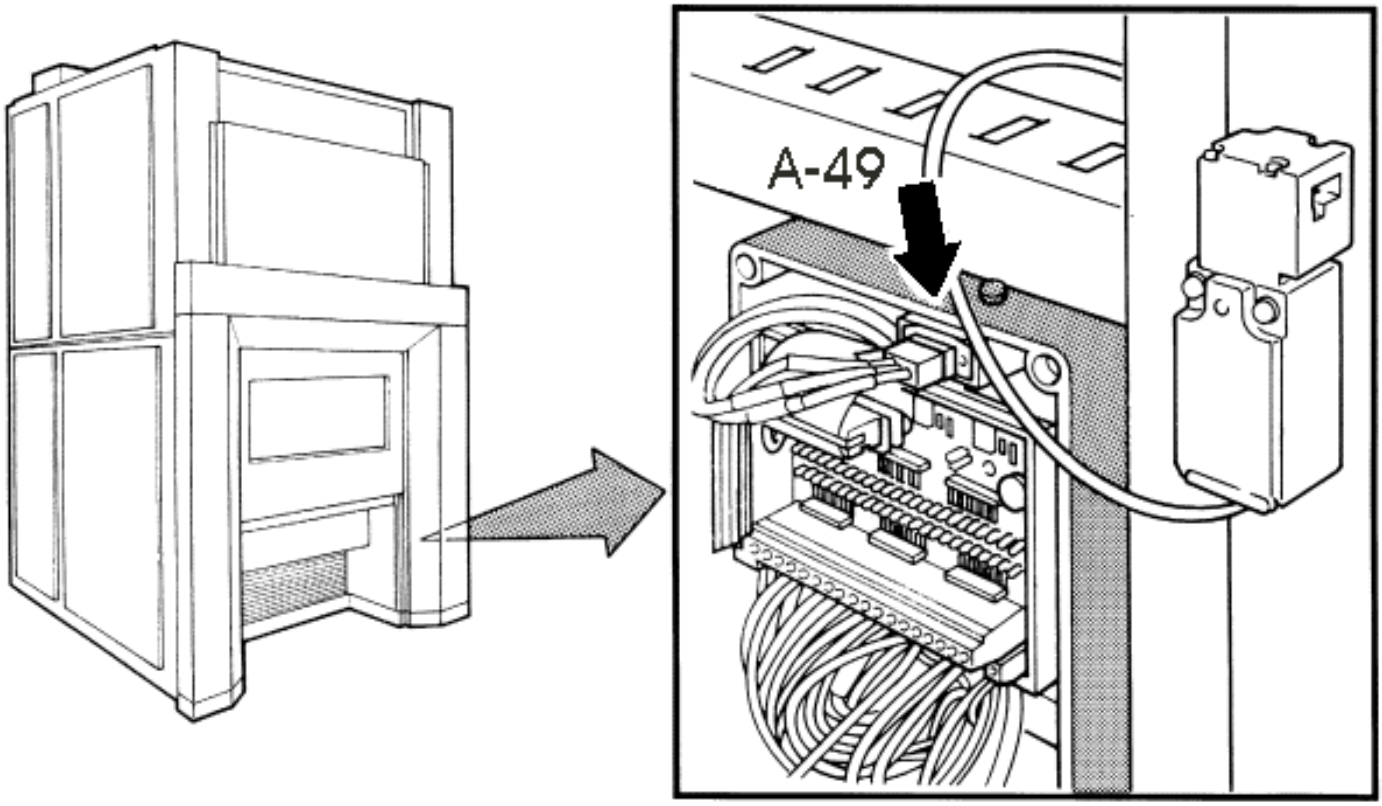

The amplifier manages the signal coming from the proximity switches placed in the internal and the external cam lever.
This signal is converted to the digital input:
- clamp **A** open;
- clamp **B** open.

See procedure **B-10** for sensor calibration.

019	LIMIT SWITCH LIFT UP A	No Alarm	051	BUBBLER 1 LEVEL	No Alarm
020	LIMIT SWITCH LIFT DOWN A	No Alarm	052	BUBBLER 2 LEVEL	No Alarm
021	LIMIT SWITCH CLAMP A CLOSED INT	No Alarm	053	FRONT SHIELD CLOSED	Warning
022	LIMIT SWITCH CLAMP A CLOSED EXT	No Alarm	054	N2 VACUUM PUMP	No Alarm
023	CLAMP A OPEN	No Alarm	055	LIFT B PORT/QUARTZ GUARD SHIELD	Warning
024	ROTATION FOOT SWITCH A	No Alarm	056	BUBBLER 3 LEVEL	No Alarm
025	REACTOR H2 LEAK WARNING	Warning	057	VACUUM PUMP TROUBLE	No Alarm
026	REACTOR H2 LEAK ALARM	N2-Alarm	058	COMPRESSED AIR VACUUM VALVES	No Alarm
027	GAS PANEL H2 LEAK WARNING	Warning	059	LIMIT SWITCH LIFT UP B	No Alarm
028	GAS PANEL H2 LEAK ALARM	N2-Alarm	060	LIMIT SWITCH LIFT DOWN B	No Alarm
029	BLOWER MOTOR THERMAL SWITCH	H2-Alarm	061	LIMIT SWITCH CLAMP B CLOSED INT	No Alarm
030	LAMINAR FLOW PRESSURE SWITCH	Warning	062	LIMIT SWITCH CLOSED EXT	No Alarm
031	POWER FAIL	No Alarm	063	CLAMP B OPEN	No Alarm
032	EXHAUST AIR VACUUM SWITCH	H2-Alarm	064	ROTATION FOOT SWITCH B	No Alarm

(A-64) LAMP FOR LOADING AREA

(A-64).1 Electric connections: see the "Schematic Wiring Machine Manual" comp. RP2210H for station A , RP2213H for station B

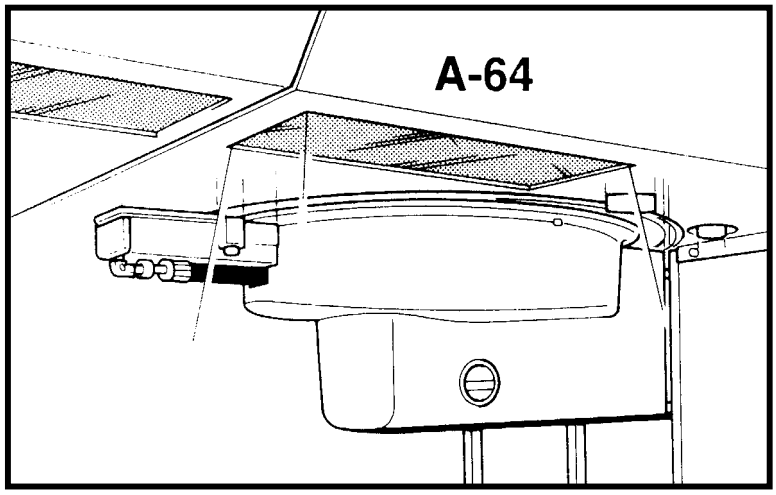

The lamp ensures that the operations in the loading/unloading station are performed in a safe and correct way.
To change the lamp:

(a) Open the shutter plate completely (LIFT DOWN command).

(b) Remove the susceptor and all the quartzware

(c) Remove the upper shield station **A** or **B** (**(A-65)** or **(A-66)**)

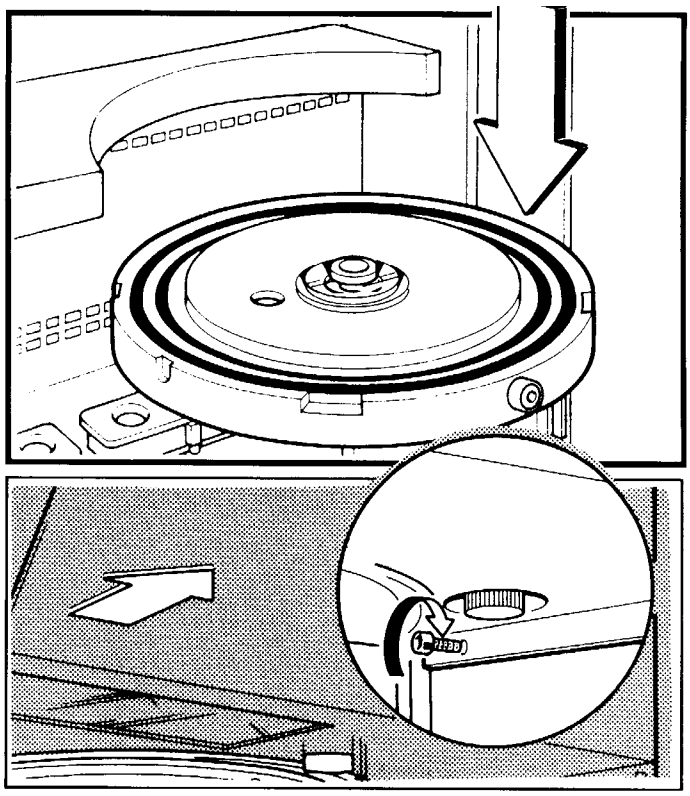

> ⚠ **CAUTION**
> When the upper shield station has been removed, pay main attention to the clamp pneumatic cylinders. For more safety close the reactor compressed air.

(A-67) (A-68) "WARNING"/"ALARM" PRESSURE SWITCH (B)

(A-67) (A-68).1 Electric connections: see the "Schematic Wiring Machine Manual" comp. SQ384H

(A-67) (A-68).2 Setting procedure

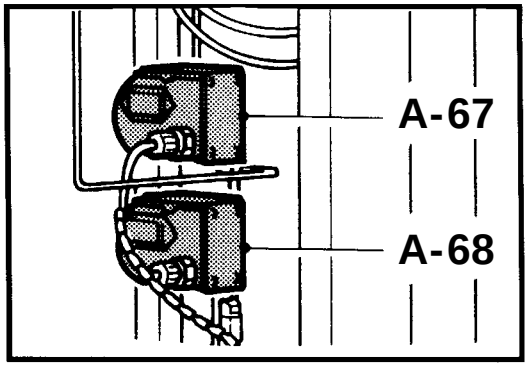

This procedure is identical both for **WARNING** and **ALARM** corresponding to station **A** and **B**:

(A-67) (A-68).2-1 Station B WARNING

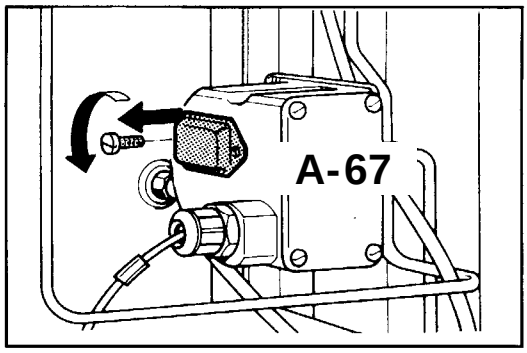

a. Remove the pressure switch **(A67)** cover;

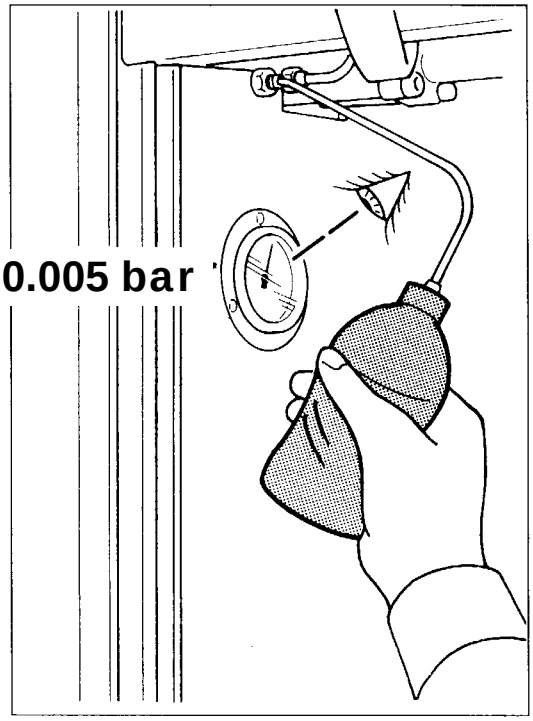

b. Using an empty bottle set the pressure switch input to pressure of **0.005 bar for WARNING**

c. Turn the screw until the **WARNING LED** light change status.

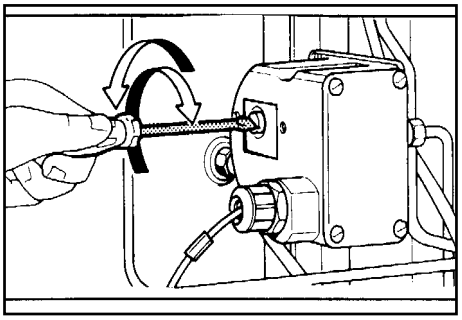

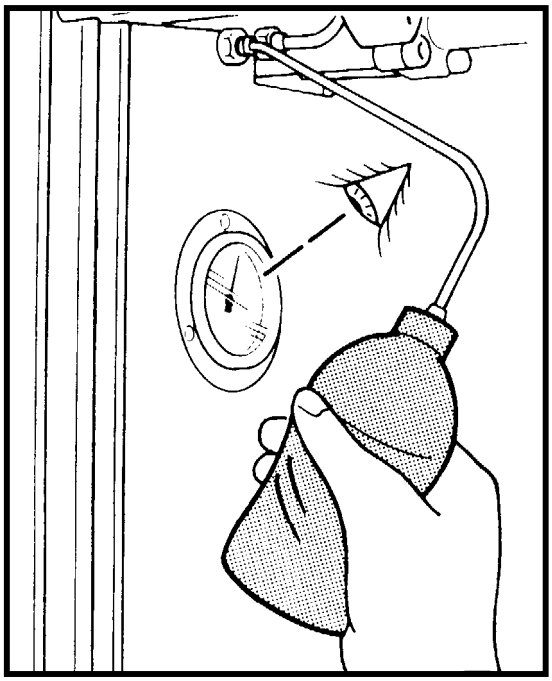

d. Re-check if **LEDs** are switching at the correct pressure values, using the pump but not the screw.

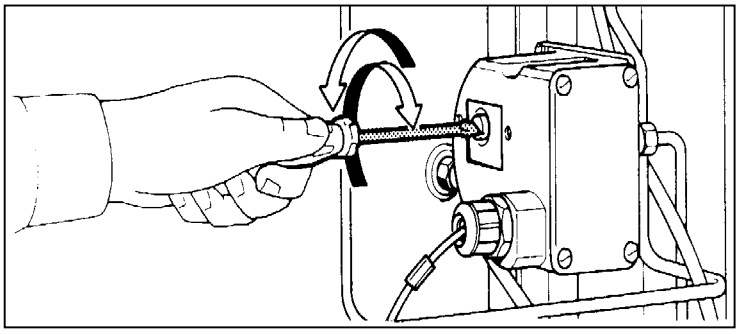

e. If this does not occur, turn the contact screw, maintaining the indicated pressure values.

041	PRESS BELL B WARNING	Warning	
042	PRESS BELL B ALARM	N2-Alarm	
043	COMPRESSED AIR PRESSURE	N2-Alarm	
044	BUBBLERS 1/2/3 ALARM	H2-Alarm	

(A-67) (A-68).2-2 Station B ALARM

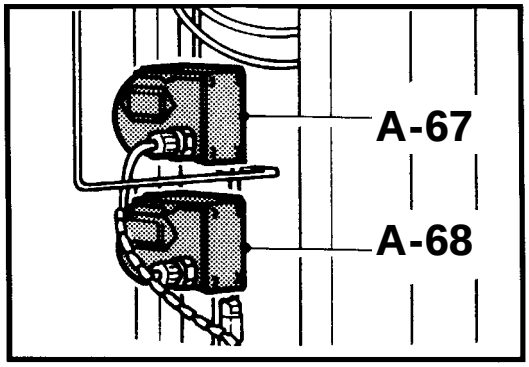

a. Remove the pressure switch **(A68)** cover;

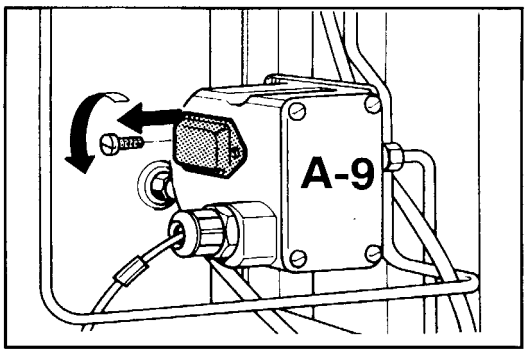

b. Remove the reactor loading area lamp shields

> ⚠ **CAUTION**
> When the upper shield station has been removed, pay main attention to the clamp pneumatic cylinders. For more safety close the reactor compressed air.

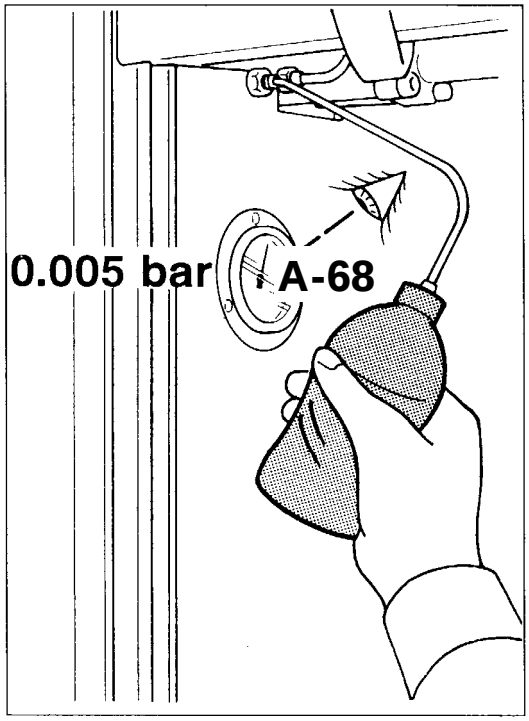

c. Disconnect the tube going to the pressure switch group shown in the picture.

d. Using an empty bottle set the pressure switch input to pressure of **0.015 bar for ALARM**

d. Turn the screw until the **ALARM LED** change status.

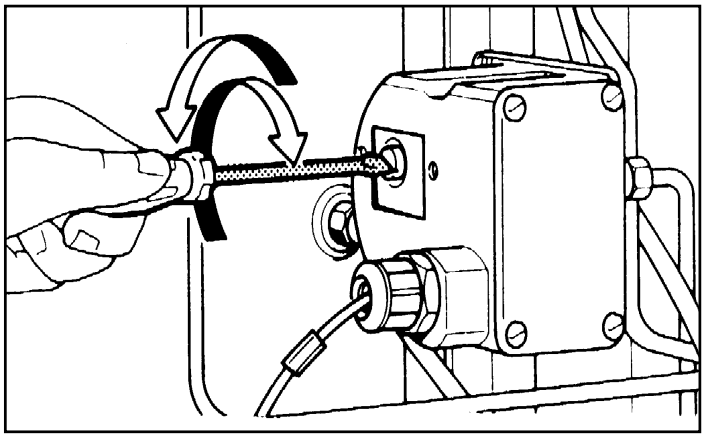

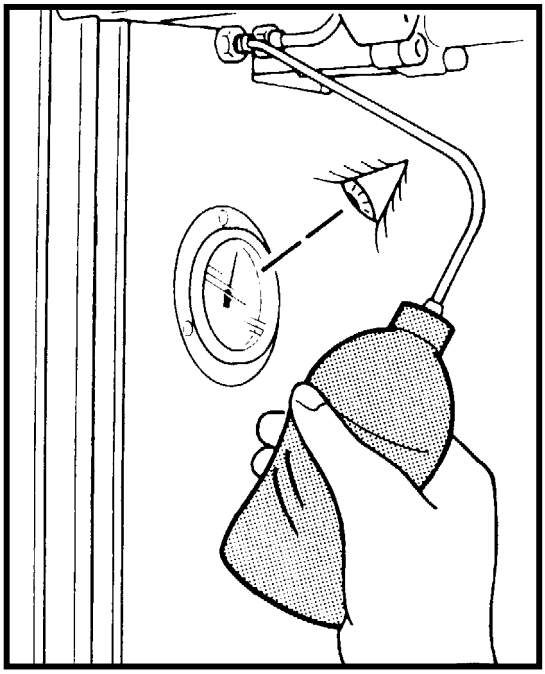

f. Using an empty bottle, but not turning the screw, re-check that the **LEDs** are switching at correct pressures.

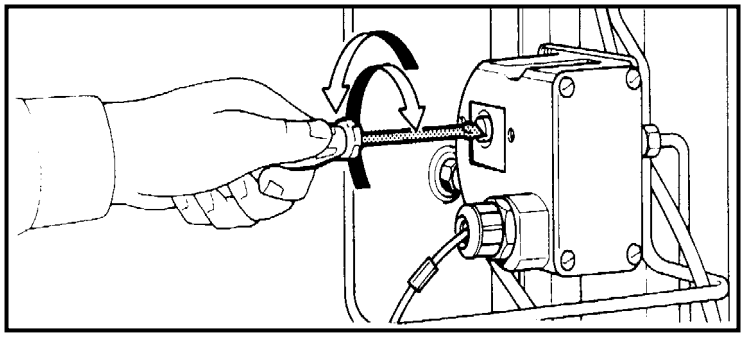

g. If they do not turn red, turn the contact screw to maintain the indicated pressures.

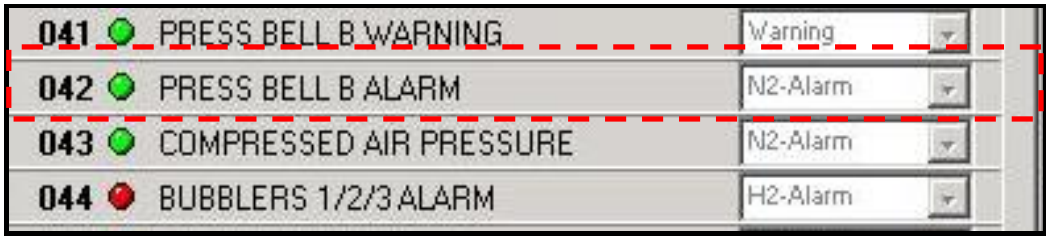

(A-67)(A-68) Controls :

Don't forget to connect back the tube going to the pressure switch group.

(A-69) PHOTOCELL EMITTER

(A-69).1 Electric connections: see the "Schematic Wiring Machine Manual" comp. BF158H

The photocell receiver ensures that the shield stops when the photocell emitter beam is interrupted. If the shield doesn't go down verify the photocell position by using the reference table.

Contacts status:

Led lit
reading beam unimpeded.
Thus the shield can go down.

Led off
reading beam shadowed.
Thus the shield cannot go down.

In case of any electrical maintenance to be carried out switch off the reactor by means of the reactor main switch.

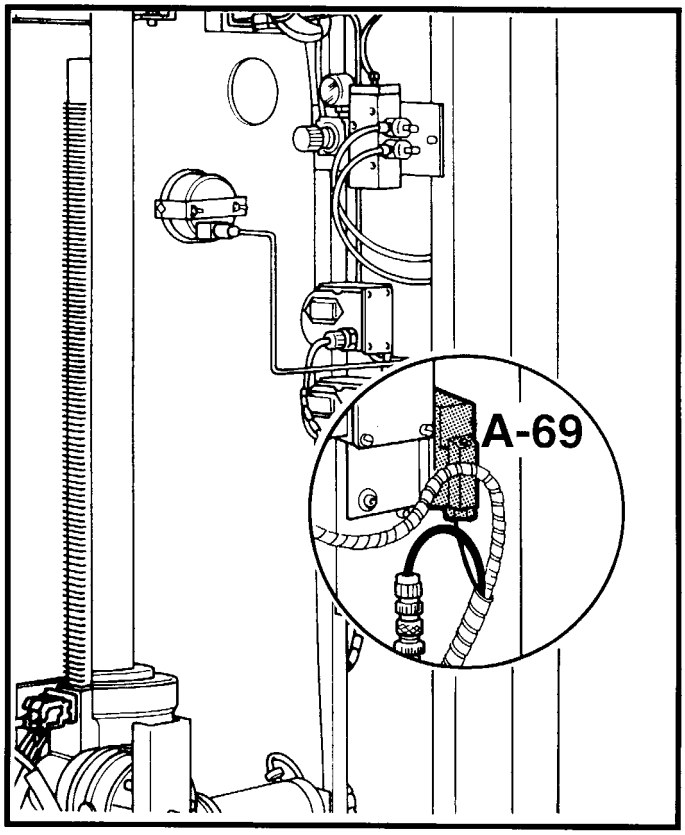

(A-71) DIGITAL INPUT CONNECTION CARD

(A-71).1 Electric connections: see the "Schematic Wiring Machine Manual" comp. AP297C

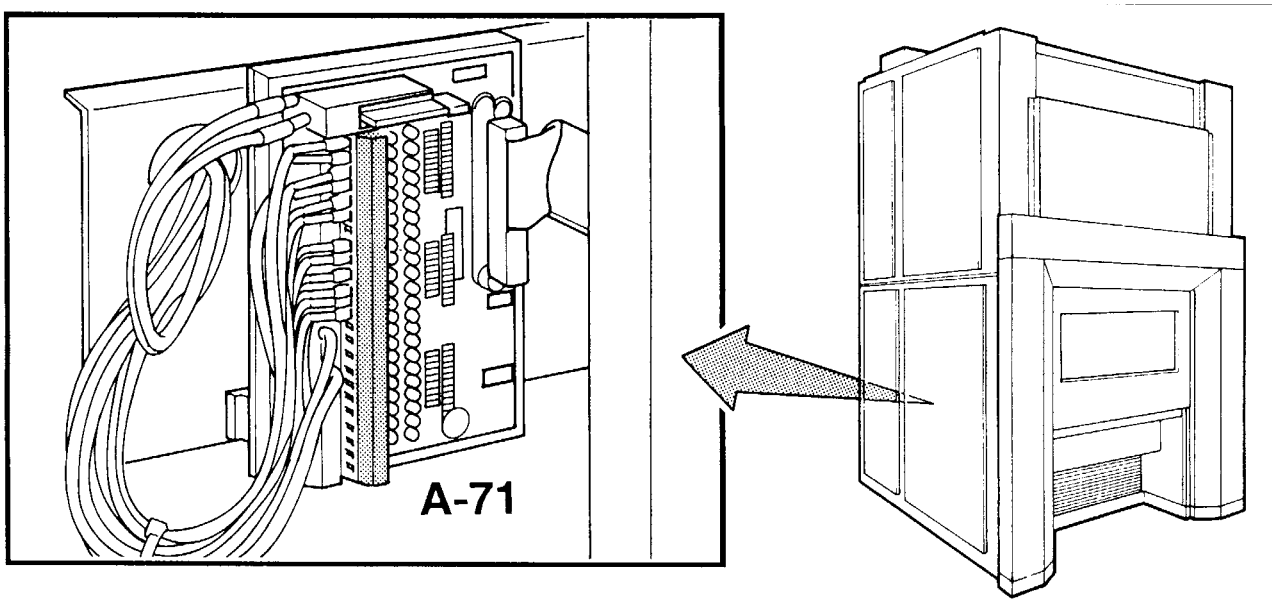

This is one of the three digital input connection board, see the manual for reference.
Alarms from 1 to 24 are managed from this board.

Digital I/O Form

Digital Input / Alarms | Digital Output

001	PRESS BELL A WARNING	Warning		033	THERMAL SWITCH COMPUTER AIR	Warning	
002	PRESS BELL A ALARM	N2-Alarm		034	O-RING LEAK TEST A	N2-Alarm	
003	THERMAL SWITCH PLATE A	H2-Alarm		035	SAFETY SWITCH COMPUTER PORT	Warning	
004	FLOW SWITCH PLATE A	H2-Alarm		036	O-RING LEAK TEST B	N2-Alarm	
005	THERMAL SWITCH COIL A	H2-Alarm		037	PRESSURE SWITCH SPOILER	No Alarm	
006	FLOW SWITCH COIL A	H2-Alarm		038	BUBBLER T.C. OUT OF RANGE	No Alarm	
007	THERMAL SWITCH PLATE B	H2-Alarm		039	SCRUBBER EMISSION	No Alarm	
008	FLOW SWITCH PLATE B	H2-Alarm		040	H2 LEAK DETECTORS FAULT	No Alarm	
009	THERMAL SWITCH COIL B	H2-Alarm		041	PRESS BELL B WARNING	Warning	
010	FLOW SWITCH COIL B	H2-Alarm		042	PRESS BELL B ALARM	N2-Alarm	
011	THERMAL SWITCH BELL CAPS A/B	H2-Alarm		043	COMPRESSED AIR PRESSURE	N2-Alarm	
012	FLOW SWITCH BELL CAPS A/B	H2-Alarm		044	BUBBLERS 1/2/3 ALARM	H2-Alarm	
013	THERMAL SWITCH CAPACITORS	H2-Alarm		045	AIR FLOW SENSOR	H2-Alarm	
014	FLOW SWITCH CAPACITORS	H2-Alarm		046	SCRUBBER TROUBLE	N2-Alarm	
015	THERMAL SWITCH COOLING AIR	H2-Alarm		047	SAFETY SWITCHES PORT A	N2-Alarm	
016	LIFT A PORT/QUARTZ GUARD SHIELD	Warning		048	SAFETY SWITCHES PORT B	N2-Alarm	
017	EMERGENCY WATER	No Alarm		049	SPOILER IN A	No Alarm	
018	SAFETY SW RP PORT	No Alarm		050	SPOILER IN B	No Alarm	
019	LIMIT SWITCH LIFT UP A	No Alarm		051	BUBBLER 1 LEVEL	No Alarm	
020	LIMIT SWITCH LIFT DOWN A	No Alarm		052	BUBBLER 2 LEVEL	No Alarm	
021	LIMIT SWITCH CLAMP A CLOSED INT	No Alarm		053	FRONT SHIELD CLOSED	Warning	
022	LIMIT SWITCH CLAMP A CLOSED EXT	No Alarm		054	N2 VACUUM PUMP	No Alarm	
023	CLAMP A OPEN	No Alarm		055	LIFT B PORT/QUARTZ GUARD SHIELD	Warning	
024	ROTATION FOOT SWITCH A	No Alarm		056	BUBBLER 3 LEVEL	No Alarm	
025	REACTOR H2 LEAK WARNING	Warning		057	VACUUM PUMP TROUBLE	No Alarm	
026	REACTOR H2 LEAK ALARM	N2-Alarm		058	COMPRESSED AIR VACUUM VALVES	No Alarm	
027	GAS PANEL H2 LEAK WARNING	Warning		059	LIMIT SWITCH LIFT UP B	No Alarm	
028	GAS PANEL H2 LEAK ALARM	N2-Alarm		060	LIMIT SWITCH LIFT DOWN B	No Alarm	
029	BLOWER MOTOR THERMAL SWITCH	H2-Alarm		061	LIMIT SWITCH CLAMP B CLOSED INT	No Alarm	
030	LAMINAR FLOW PRESSURE SWITCH	Warning		062	LIMIT SWITCH CLOSED EXT	No Alarm	
031	POWER FAIL	No Alarm		063	CLAMP B OPEN	No Alarm	
032	EXHAUST AIR VACUUM SWITCH	H2-Alarm		064	ROTATION FOOT SWITCH B	No Alarm	

Exit

Switch off the reactor main switch in case of maintenance.

(A-82) BLOWERS FOR COMPUTER

(A-82).1 Electric connections: see the "Schematic Wiring Machine Manual" comp. EV146I

Verify periodically that the blowers are turning.
In particular with the reactor switched OFF verify by rotating by hand the blowers that are moving freely.

CAUTION
For maintenance operations to the blowers for computer, bring the machine to power level "0", lock the reactor main switch and remove the key.

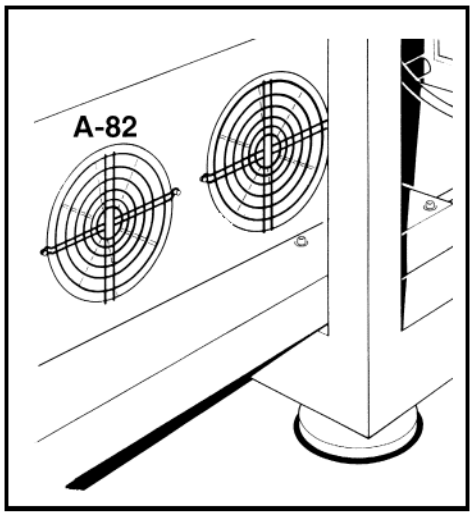

(A-84) BLOWERS FOR POWER SUPPLY

(A-84).1 Electric connections: see the "Schematic Wiring Machine Manual" comp. EV148I

Verify that the blowers are turning.
In particular with the reactor switched OFF verify by rotating by hand the blowers that are moving freely.

CAUTION
For maintenance operations to the blowers for power supply, bring the machine to power level "0", lock the reactor main switch and remove the key.

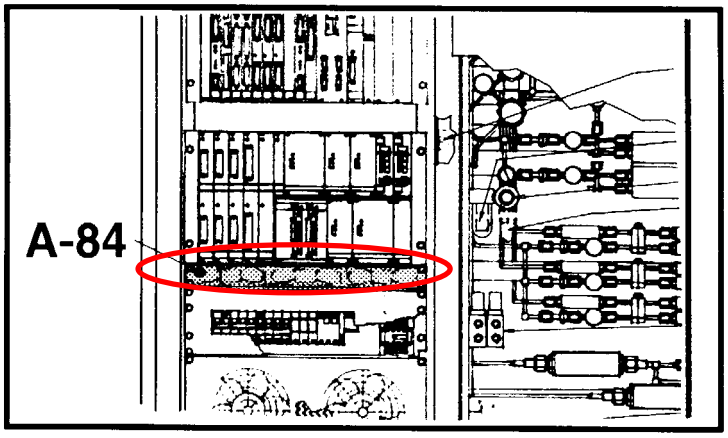

(A-85) THERMOSWITCH COMPUTER

(A-85).1 Electric connections: see the "Schematic Wiring Machine Manual" comp. SQ366H

Set Point: **30°C**

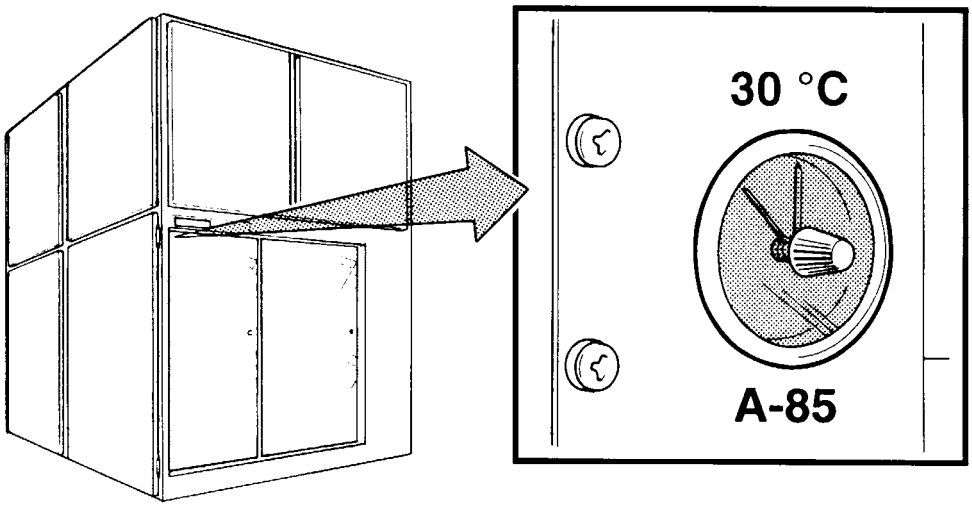

The thermal switch computer cooling air ensures that no overheating of the reactor electronic rack occurs.
The "thermal sw. computer air" warning message is released when the temperature inside the computer cabinet exceed 30° C and the reactor will be automatically switched off after one minute.

(A-85).2 Procedure C6 (thermal switch computer cooling air)

a. While turning the knob on the instrument (until the **RED MARK** goes below the **BLACK MARK),** check if the **RED** indicator light, referring to the **ALARMS** page, illuminates.

b. Turning the knob, align it up with the RED MARK to **30 °C**.

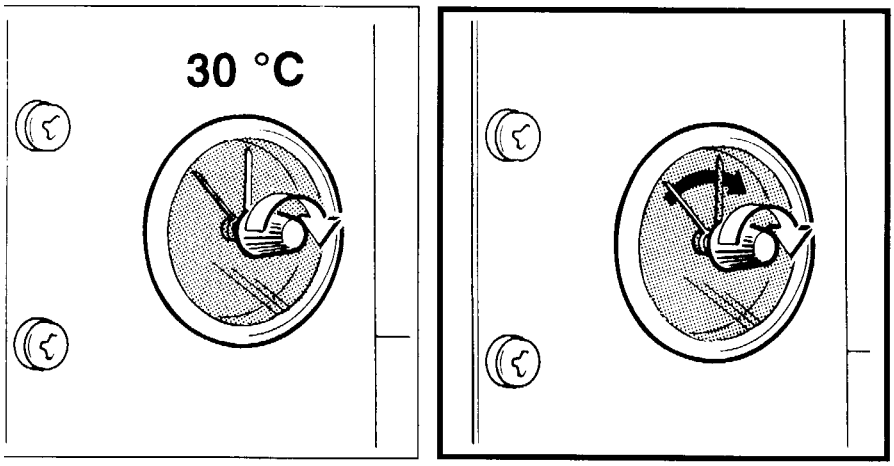

c. If the **LED** does not switch on, consult the .**"THERMAL SW COMPUTER AIR"** point, in the **TROUBLESHOOTING** chapter.

(A-97) REACTOR HYDROGEN SENSOR

(A-97).1 Electric connections: see the "Schematic Wiring Machine Manual" comp. AP243E AP249E

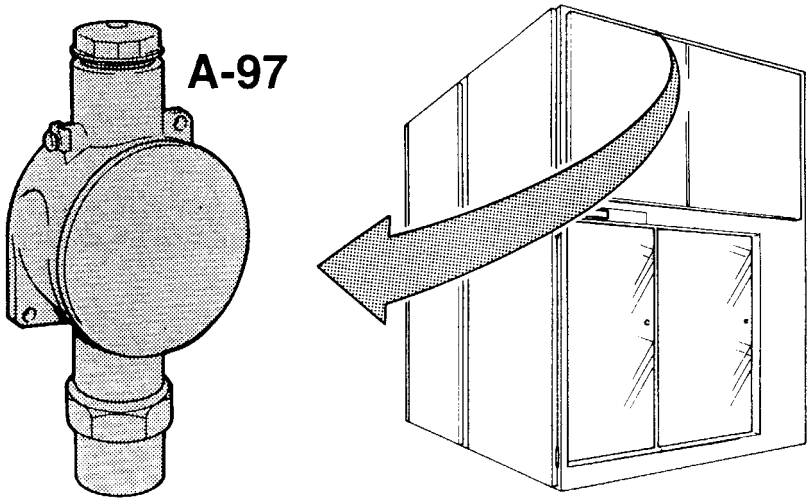

(A-97).2 Procedure C3 (Zero and full scale setting of H2 LEAK DETECTOR WARNING/ALARM 1/2)

There are three different kinds of Hydrogen Sensor used in LPE PE2061 S reactors. All the models are equivalent but differs in the regulation details. Please refer to the corresponding **MP0/LIE** or **MP1** Manual provided with the machine for more information.

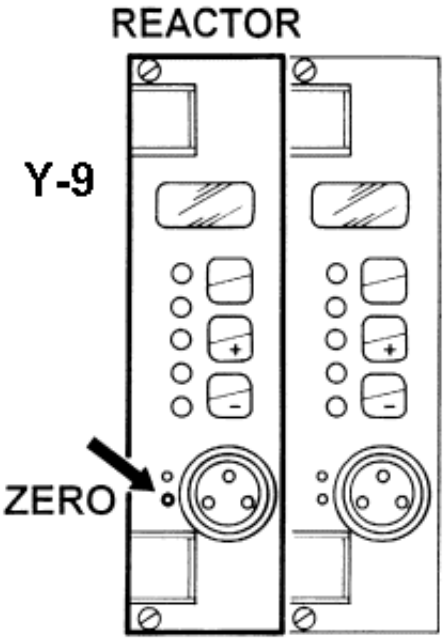

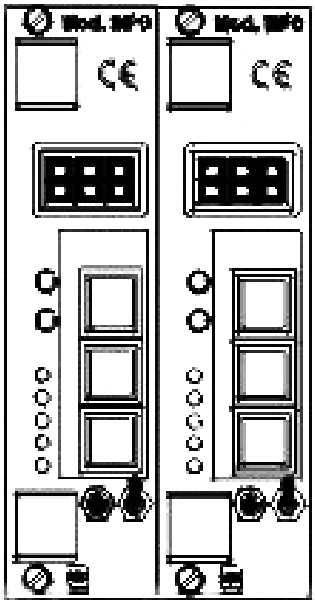

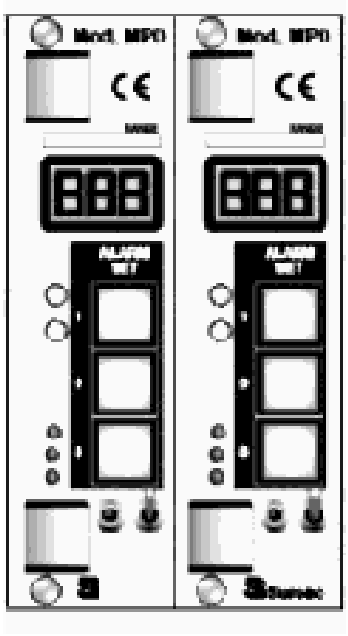

The instrument must indicate **ZERO** in the presence of clean air, and 100 or other value in regard to full scale.

Two methods are possible, depending on the model provided, both for zero and full scale settings:

a. **approximate trimmers (analog circuit)**
b. **push-buttons (digital circuit)**

The trimmer adjusts from a starting to a finishing point

depending on the number of revs. (**20**) permitted by the trimmer design. Push-button adjustment is controlled by the card's software. Control start and finishing positions are defined, within the card's work ambient, by the numbers illustrated here and visible on the card by following the relevant instructions. For zero setting, the adjustment range is **-10** to **+10**.

Adjustment range for LEL version:

starting point -5 (the cards are delivered with this OFFSET value); **minimum value -10; maximum value +5. In addition to these values, zero must be set with the zero trimmer.**

FULL SCALE SETTING (minimum value 10; maximum value 200).

The instruments are normally supplied with the SPAN value set at approx. 110. When this value reaches 200, maximum threshold has been reached and the push-button is of no further use. If you wish to further increase the value shown on the display, use the SPAN trimmer.

SETTING VALUES

WARNING = 10% LEL (LOWER EXPLOSIVE LEVEL)

ALARM = 20% LEL (LOWER EXPLOSIVE LEVEL)

NOTE: for particular information about **MP0/LIE** and **MP1** installation and setting, see the enclosure **MP0/LIE** and **MP1** manual.

(A-105) BOX CONNECTION

(A-105).1 Wires connecting point between upper and lower station and connecting box for external supplies (scrubber , bubbler etc.) (see scheme (A-105)

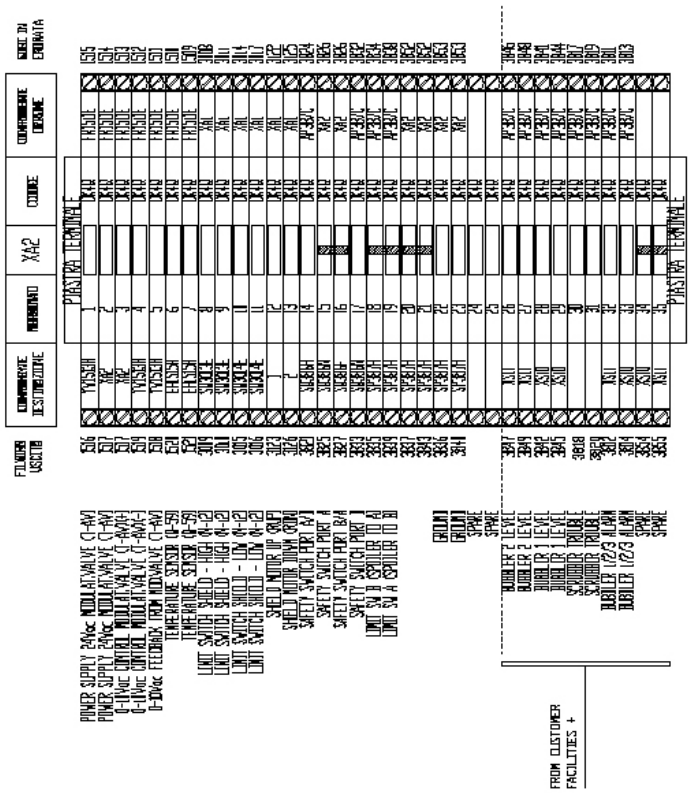

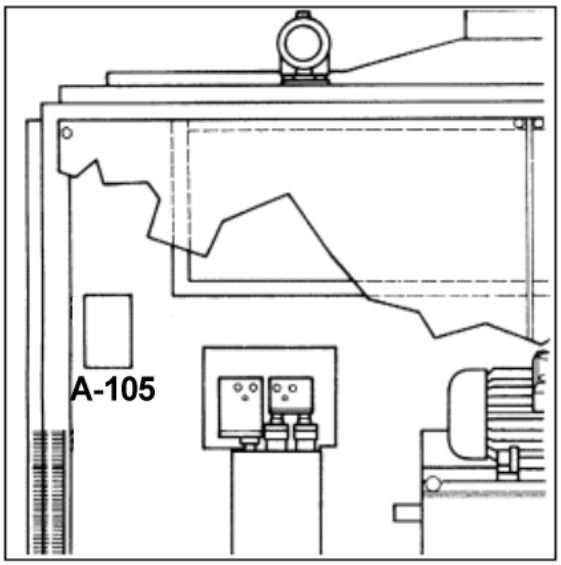

(B-8) CAMS

CAUTION Before beginning the following maintenance operations, make sure that the quartz-guard is always backed, because in REACTOR MAINTENANCE, the safety photocell of the quartz-guard does not work and there can be interference with quartz-guard during shutter plate movement, with possible damages.

Before proceeding to any cleaning or maintenance, return to the MAIN MENU and select the REACTOR MANAGEMENT command.
This command is available only if the safety requirements are met (see the Operator manual).

(B-8).1 Special equipment needed for this item :

None

(B-8).2 Special tools needed for this item :

None

(B-8).3 Controls :

(a) The cams movement.

During the shutter plate closing/opening the cams movement must be smooth.
If the movement is not smooth or if one cam is faster than the other **(max 3 seconds difference)** the problem can be due to the wear of the bearings **(B-4) (B-5)** or to the wear of the cylinder **(B-12)**.

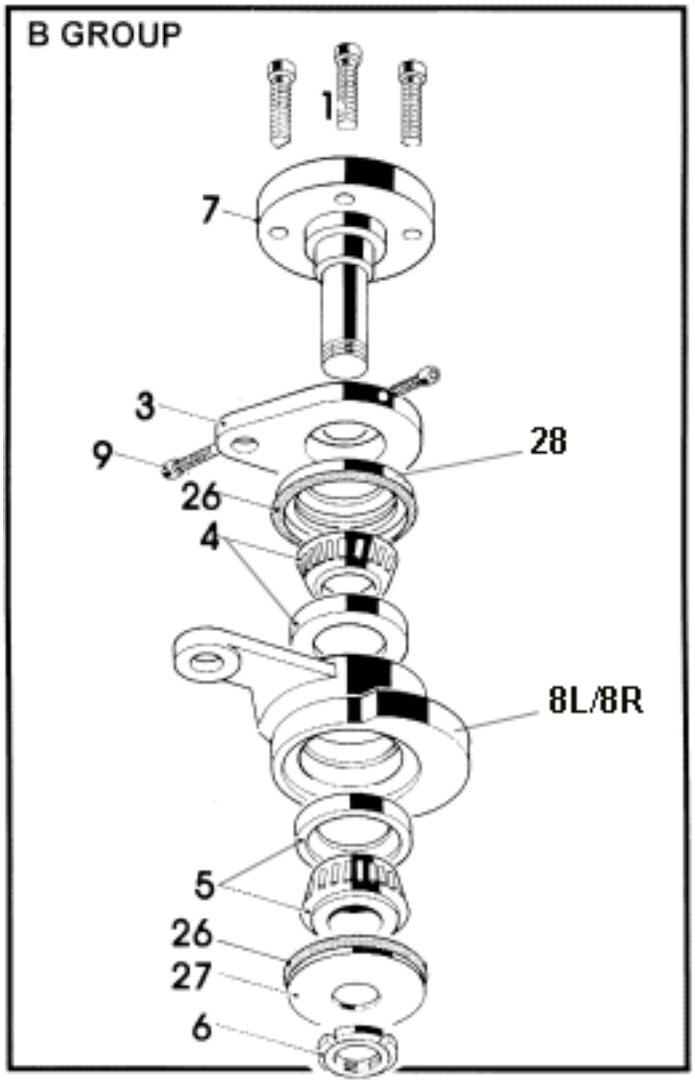

To understand whether the problem is due to the bearings:

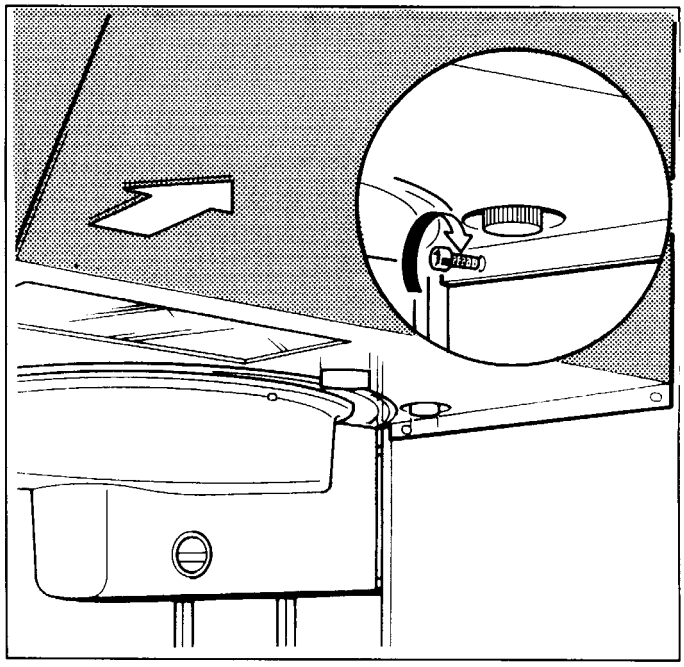

(a.1) Remove the upper shield station **A** or **B (A-65) (A-66)**

> ⚠ **CAUTION**
> When the upper shield station has been removed, pay main attention to the clamp pneumatic cylinders. For more safety close the reactor compressed air.

and remove the half table.

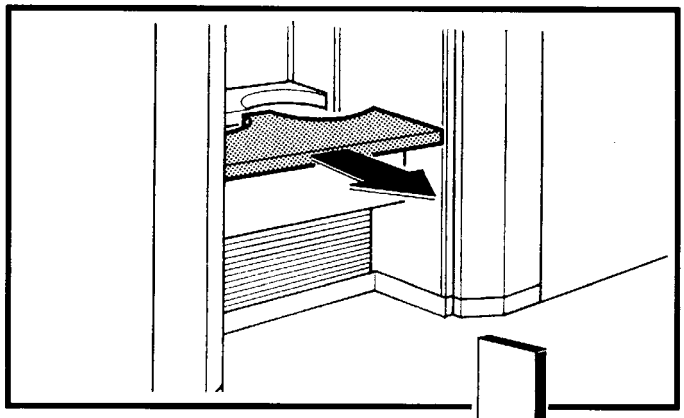

(a.2) Open the shutter plate (lift down).

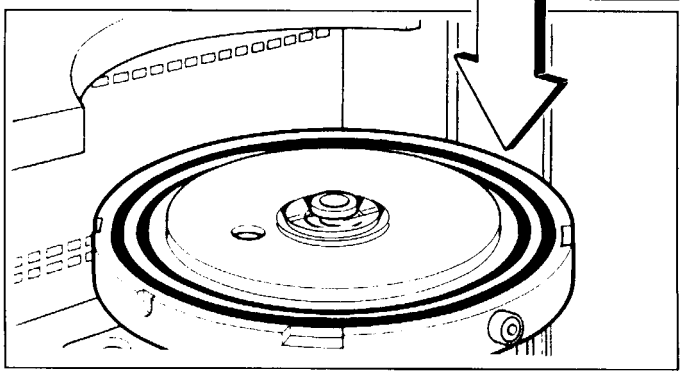

(a.3) Remove the pin from the fork **(B-11)**.

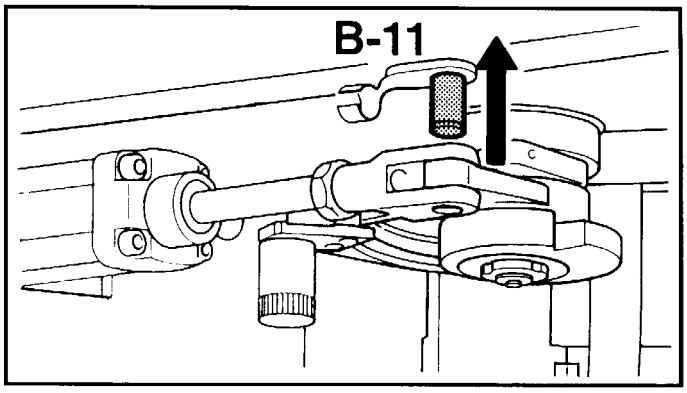

(a.4) Manually rotate the cam: the movement must be smooth even with some resistance due to the 2 O-rings **(B-26)**.

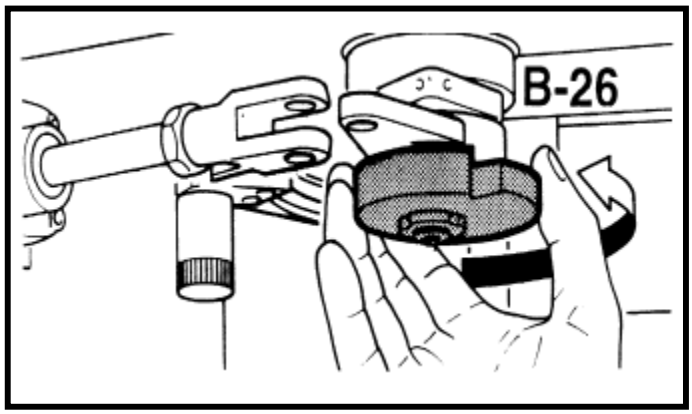

(a.5) If the movement is not smooth replace the 2 bearings (see forth cams removal).

(b) **The surface of contact with the pin roller (D-19).**

The cam is to be replaced once the surface of contact with the pin roller is not smooth and there is a 3" higher step.

To understand whether the problem is due to the cylinder :

See **(B-12)** (Pneumatic cylinder)

(B-8).4 Scheduled maintenance (PM) :

None

(B-8).5 Long term maintenance :

(a) Remove the cams (see cams removal).
(b) Clean the parts (diluent bath).
(c) Spread a thin layer of silicone grease on the bearings seat **(B5 - B4)**.
(d) Spread a thin layer of silicone grease on the O-rings **(B26 - B28)**.

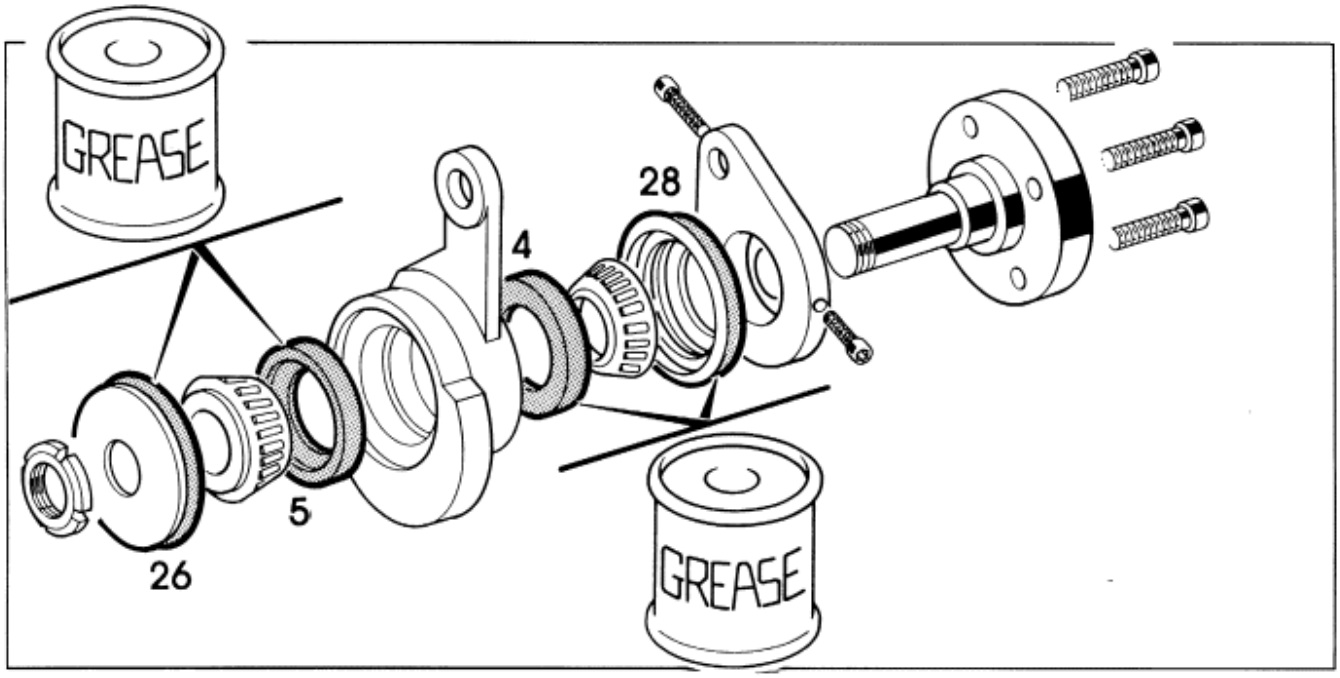

(e) Reassemble the cams (see cams reassemble).

(B-8).6 Cams removal

(a) Remove the upper shield station **A** or **B (A-65)(A-66).**

> ⚠ **CAUTION**
> When the upper shield station has been removed, pay main attention to the clamp pneumatic cylinders. For more safety close the reactor compressed air.

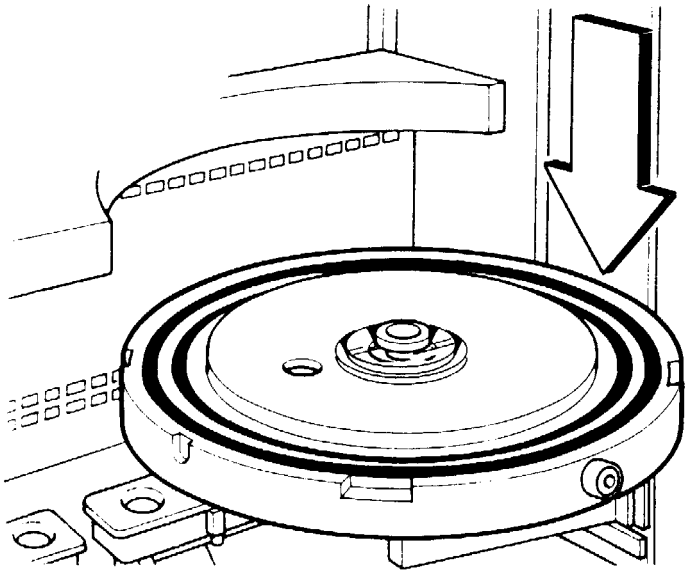

(b) Open the shutter plate (lift down).

(c) Remove the pin in the fork **(B-11).**

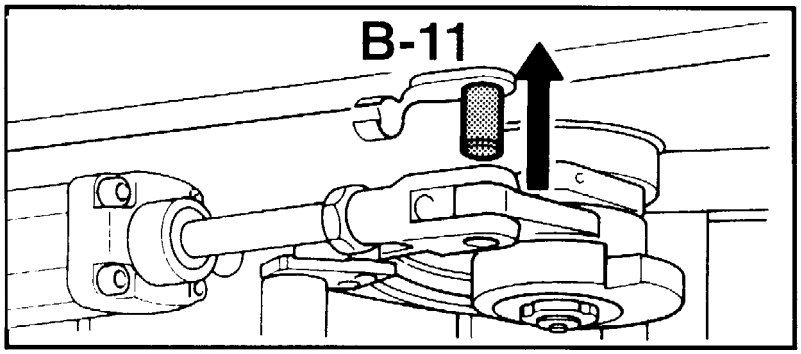

(d) Unscrew the squeezing ring **(B-6)**.

(e) Slip the cam out of the shaft **(B-7)** together with the bearings **(B-5/B-4)** and the O-rings **(B-26)** and the lower and upper gasket disks **(B27 / B28)**.

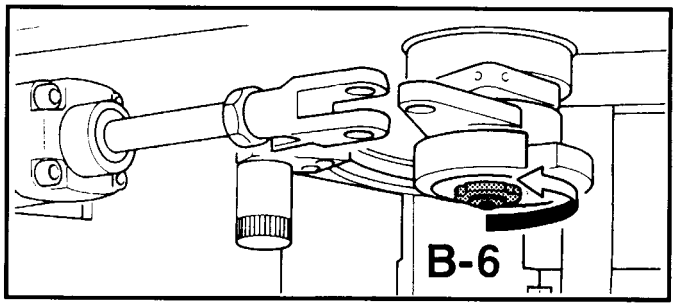

(B-8).7 Cams reassemble

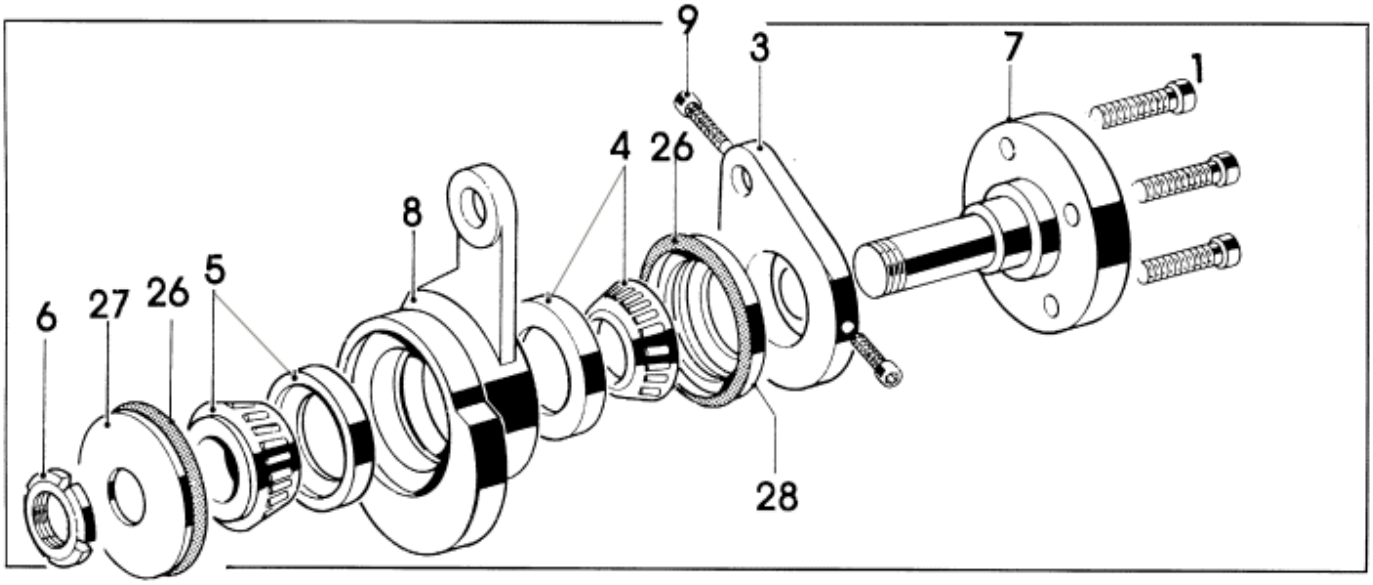

(a) Slip the inner and outer bearings into the cam (see drawing **group B** for orientation).

(b) Insert the O-ring and the upper gasket disk **(B-28)**, push against the bearing **(B-4)**.

(c) Insert the O-ring and the lower gasket disk **(B-27)**, push against the bearing **(B-5)**.

(d) Slip the whole part in the shaft **(B-7)**, use the lower gasket disk **(B-27)** to push.

(e) Screw the squeezing ring **(B-6)**.

(f) See Cams calibration chapter.

(B-8).8 Cams calibration

(a) Screw the squeezing ring **(B-6),** tighten it until the 2 bearings are well compressed.

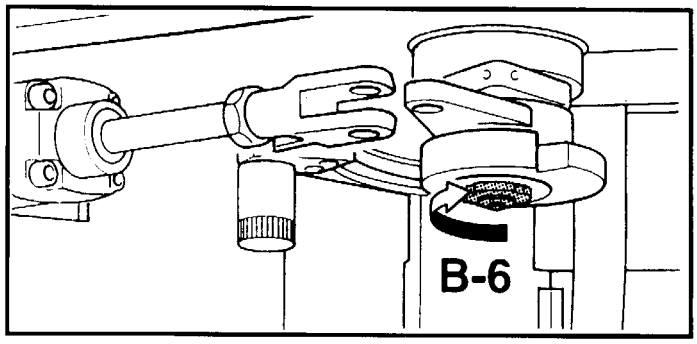

(b) Slowly release the squeezing ring **(B-6)** and at the same time manually rotate the cam

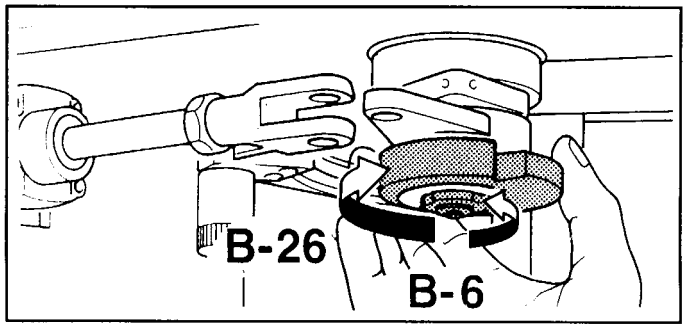

(c) Repeat (**"a" and "b"**) until the lower gasket disk **(B-27)** starts to move

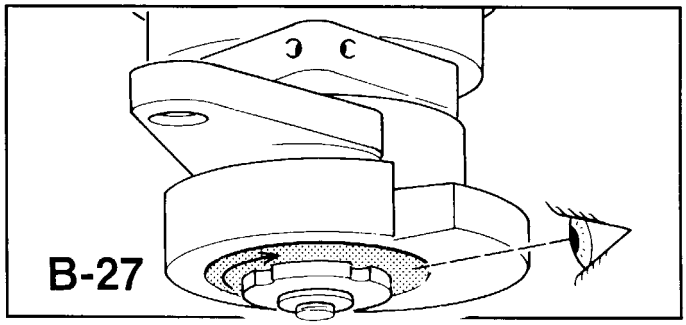

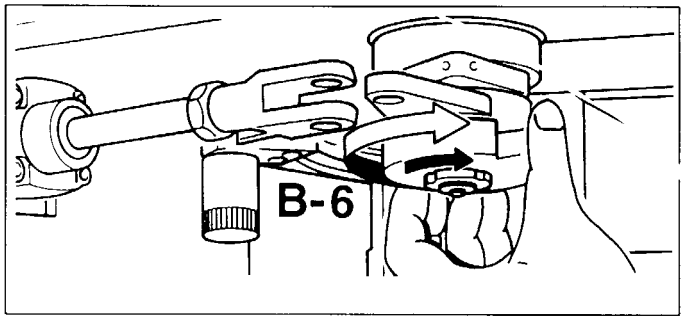

(d) Manually rotate the cam and, at the same time, slowly tighten the squeezing ring **(B-6)** until the lower gasket disk stops.

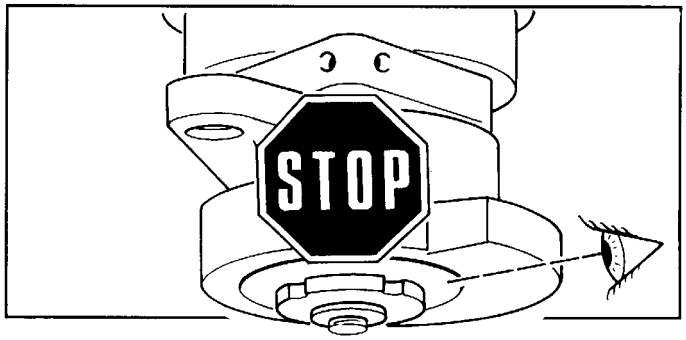

(e) Insert the pin in the fork **(B-11)**.

(f) Close the shutter plate (lift up).

(g) Replace the upper shield station **A** or **B (A-65) (A-66)**.

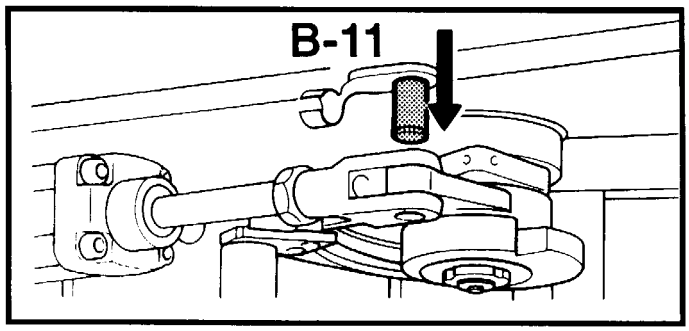

(B-8).9 Suggestions

Check the air compressed pressure value on the manometer **(B-21)** of the pressure regulator **(B-20)**.
It must not exceed **2 bar**.
See MAINTENANCE OPERATIONS **B-20: PRESSURE REGULATOR** chapter, to calibrate the pressure value.

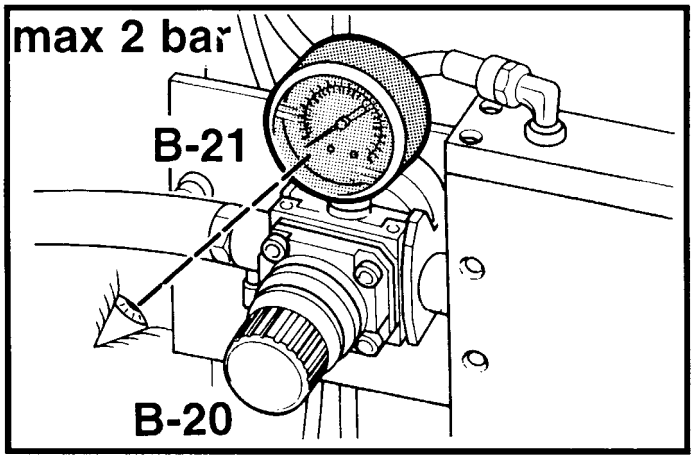

(B-10) SENSOR

CAUTION Before beginning the following maintenance operations, make sure that the quartz-guard is always backed, because in REACTOR MAINTENANCE, the safety photocell of the quartz-guard does not work and there can be interference with quartz-guard during shutter plate movement, with possible damages.

Before proceeding to any cleaning or maintenance, return to the MAIN MENU and select the REACTOR MANAGEMENT command.
This command is available only if the safety requirements are met (see the Operator manual).

(B-10).1 Special equipment needed for this item :

None

(B-10).2 Special tools needed for this item :

None

(B-10).3 Controls :

None

B-10).4 Scheduled maintenance (PM) :

None

(B-10).5 Long term maintenance :

None

(B-10).6 Sensor removal

(a) Close the shutter plate (lift up) (the locker group must be locked).

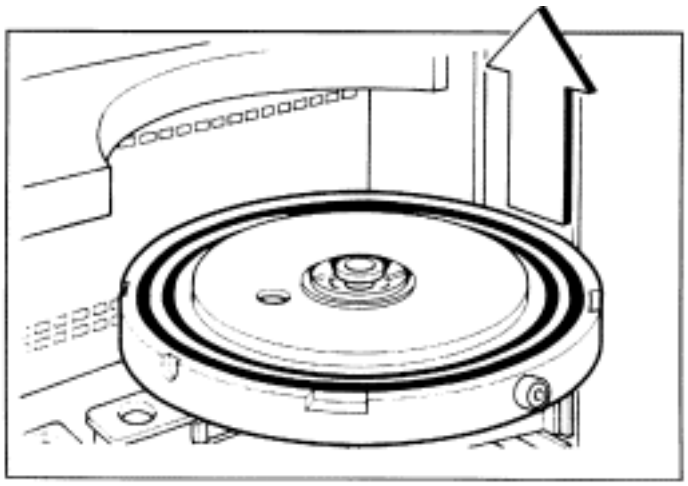

(b) Remove the upper shield station **A** or **B (A-65) (A-66)**.

> ⚠ **CAUTION**
> When the upper shield station has been removed, pay main attention to the clamp pneumatic cylinders. For more safety close the reactor compressed air.

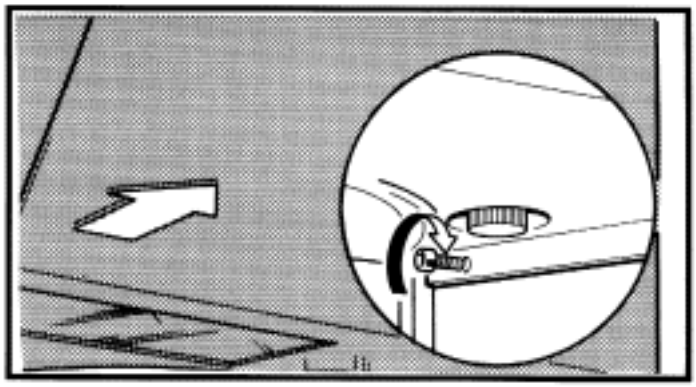

(c) Open the shutter plate (lift down).

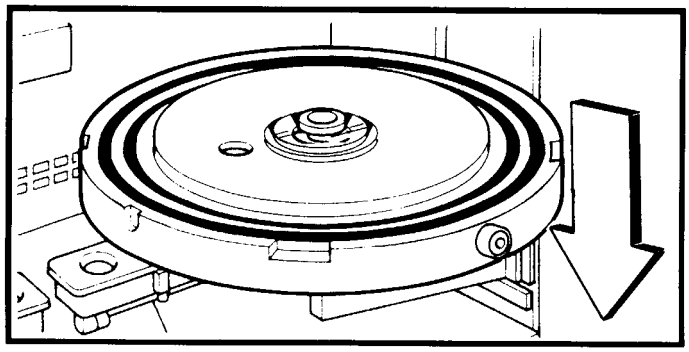

(d) Disconnect the interested sensor wire from the proximity sw. amplifier card **(A-49)**.

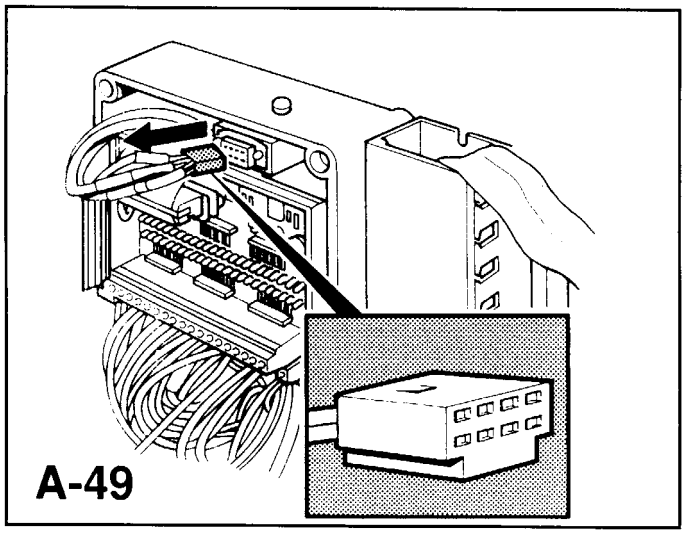

(e) Loose the screw **(B-9)**.

(f) Slip off the sensor and the wire (pull them down).

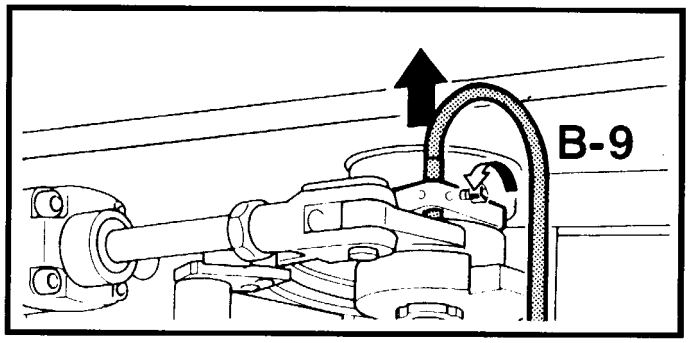

(B-10).7 Sensor reassemble

(a) Slip in the new wire first and the new sensor next.

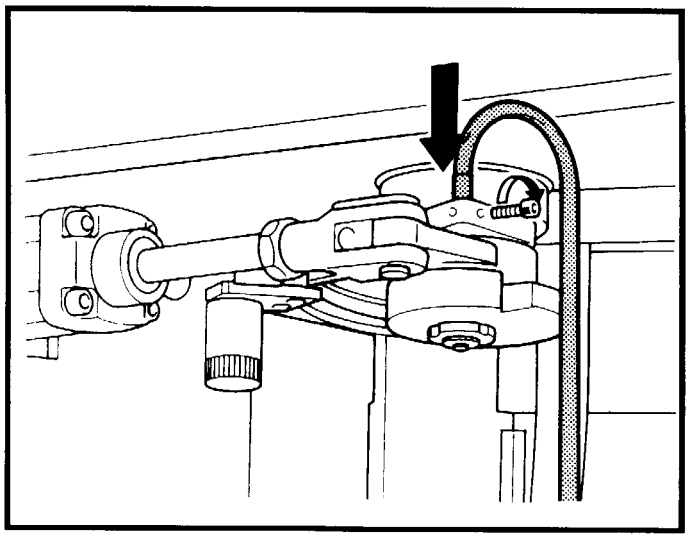

(b) Connect the sensor wire to the proximity sw. amplifier card **(A-49)** See "Schematic Wiring Machine Manual" comp. **AP404M** for station **A**, **AP404D** for station **B** electrical connections.

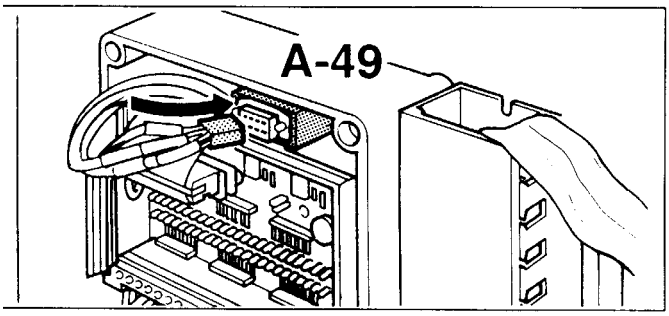

⚠ **CAUTION** Pay attention to the polarity

There are 2 leds on the proximity sw. amplifier card **(A-49)** , one each sensor.
The leds light up when the sensor is off position (not activated).

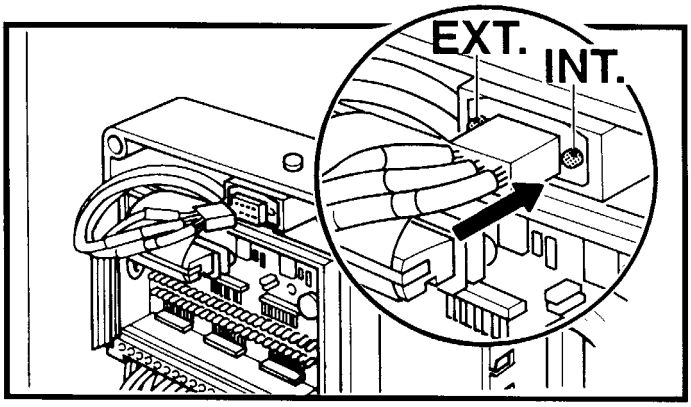

(c) See Calibration - gap calibration.

(d) See Calibration - position calibration.

(e) Close the shutter plate (lift up).

(f) Reassemble the upper shields.

(B-10).8 Sensor calibration

(B-10).8.1 Gap calibration

(a) Close the shutter plate (lift up) (the locker group must be locked)

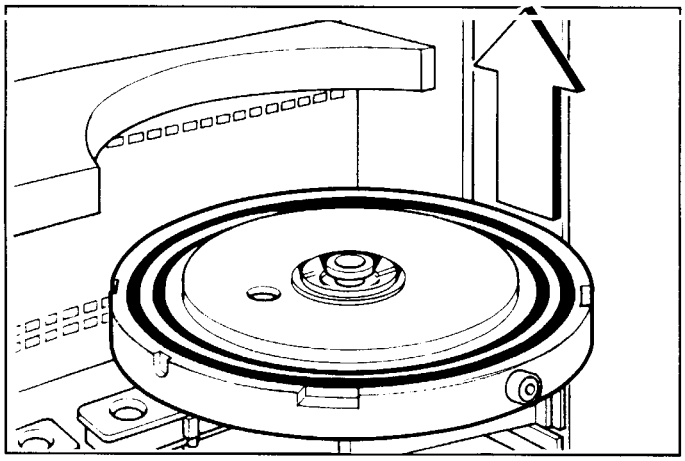

(b) Remove the upper shield station **A** or **B (A-65) (A-66)**.

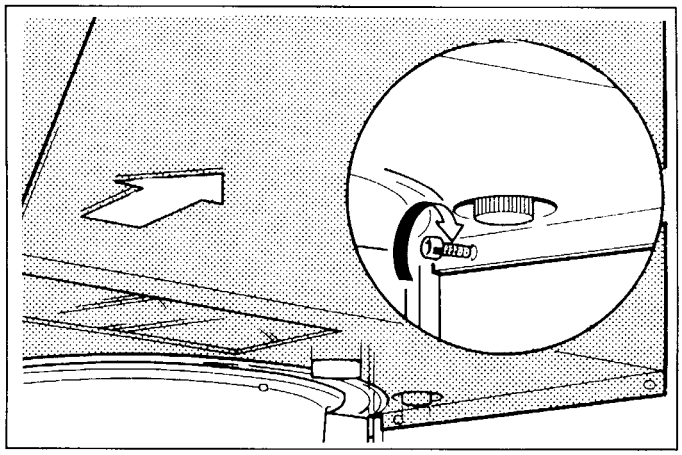

(c) Loose the screw **(B-9)**.

(d) Position the sensor in order to have **0,5 mm** gap between sensor and cam lever see locker group **(B)**).

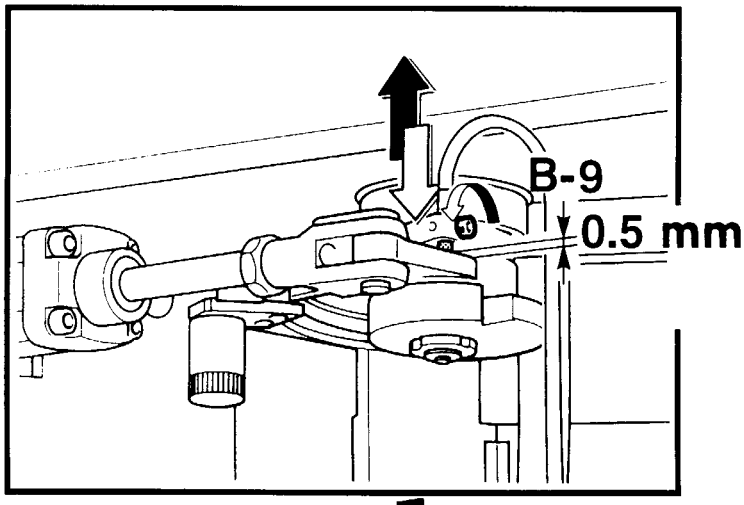

(e) Tighten the screw **(B-9)**.

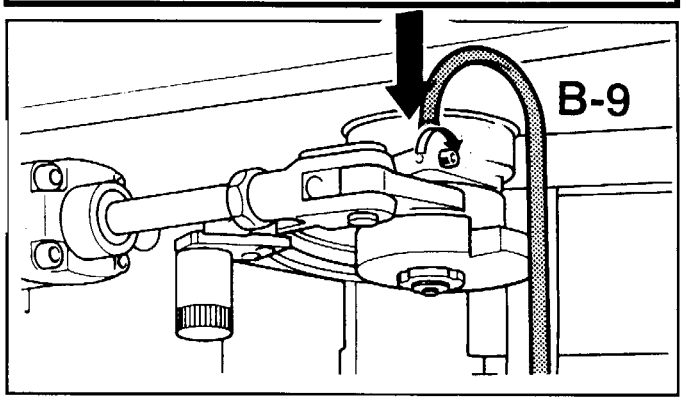

WARNING The sensor can be damaged if the screw **(B-9)** is too tight.

(B-10).8.2 Position calibration.

(a) Close the shutter plate (lift up) (the locker group must be locked).

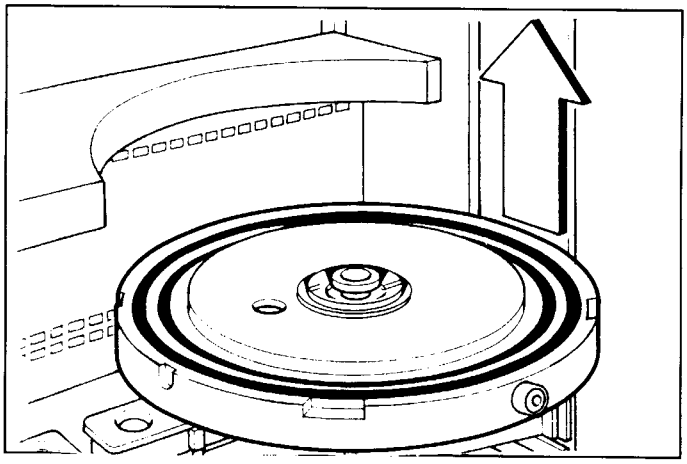

(b) Remove the upper shield station **A** or **B (A-65) (A-66)**.

> ⚠ **CAUTION**
> When the upper shield station has been removed, pay main attention to the clamp pneumatic cylinders. For more safety close the reactor compressed air.

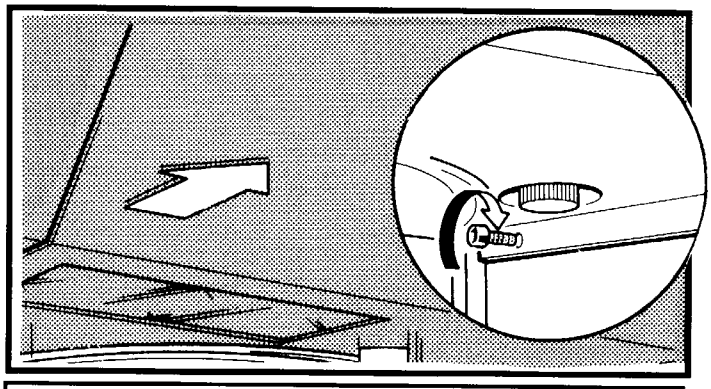

(c) Loose the screw **(B-2)**.

(d) Position the sensor in order to have the sensor **10 mm** inside the cam lever.

(d) Tighten the screw **(B-2)**.

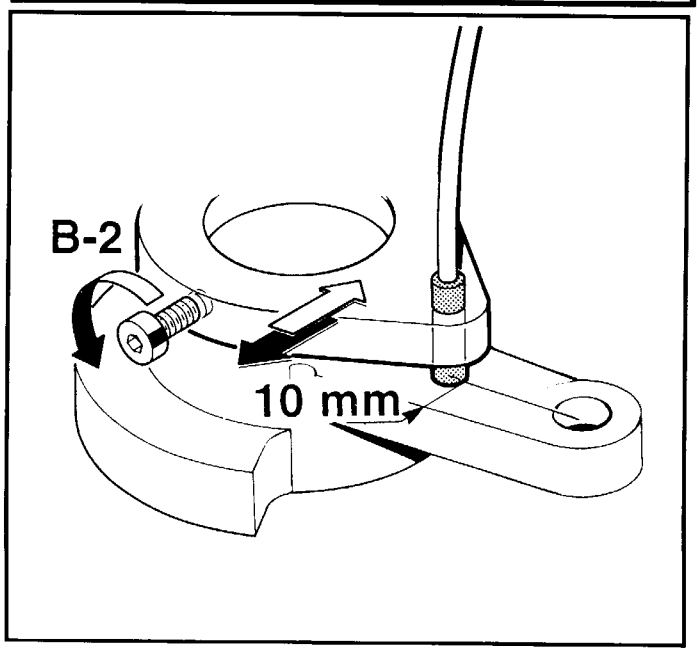

(B-10).9 Suggestions

None

(B-12) PNEUMATIC CYLINDER

CAUTION Before beginning the following maintenance operations, make sure that the quartz-guard is always backed, because in REACTOR MAINTENANCE, the safety photocell of the quartz-guard does not work and there can be interference with quartz-guard during shutter plate movement, with possible damages.

Before proceeding to any cleaning or maintenance, return to the MAIN MENU and select the REACTOR MANAGEMENT command.
This command is available only if the safety requirements are met (see the Operator manual).

(B-12).1 Special equipment needed for this item :

None

(B-12).2 Special tools needed for this item :

None

(B-12).3 Controls :

- The shaft movement must be smooth
- There must not be leakage from the shaft seals

(B-12).4 Scheduled maintenance (PM) :

- Keep the shaft clean

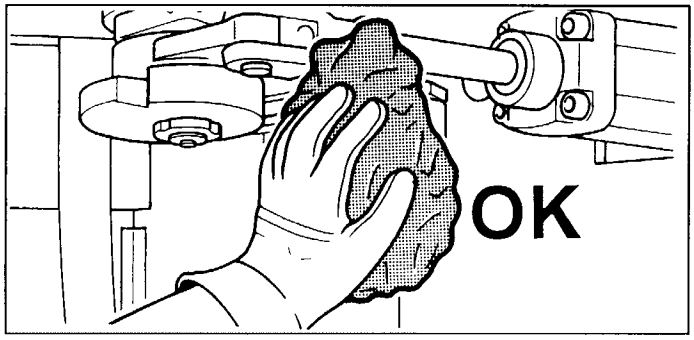

(B-12).5 Long term maintenance :

None

(B-12).6 Cylinder removal

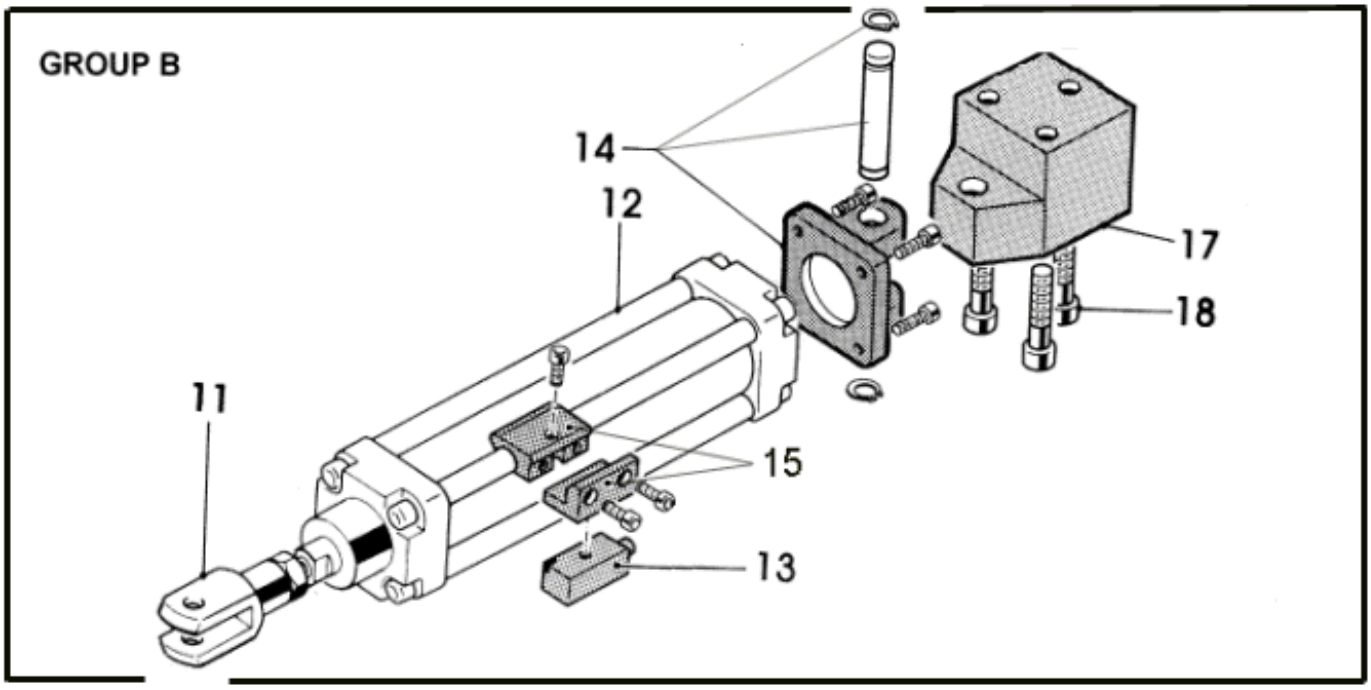

(a) Close the shutter plate (lift up) (the locker group must be locked).

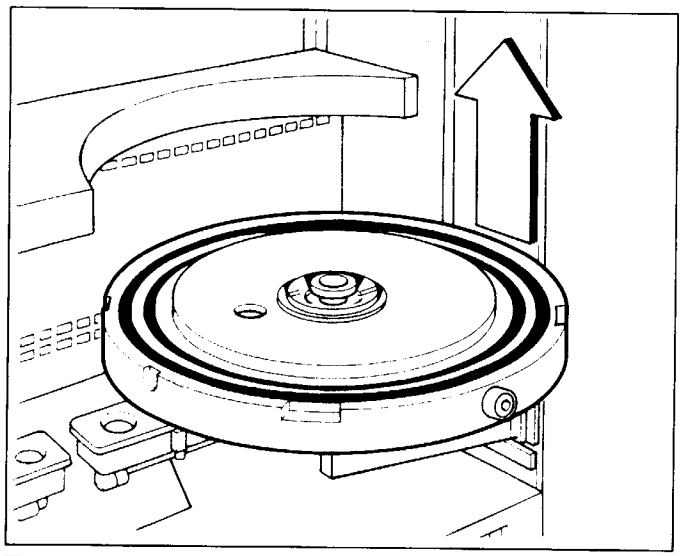

(b) Remove the upper shield station **A** or **B (A-65)(A-66)**.

> ⚠ **CAUTION**
> When the upper shield station has been removed, pay main attention to the clamp pneumatic cylinders. For more safety close the reactor compressed air.

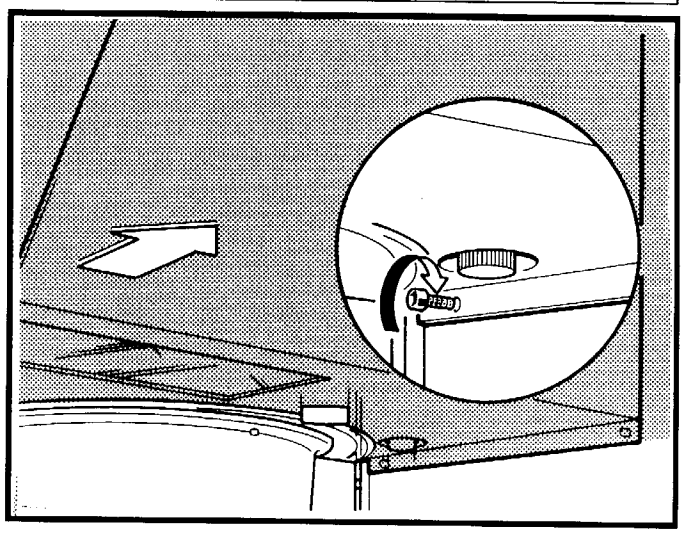

(c) Shut the compressed air off

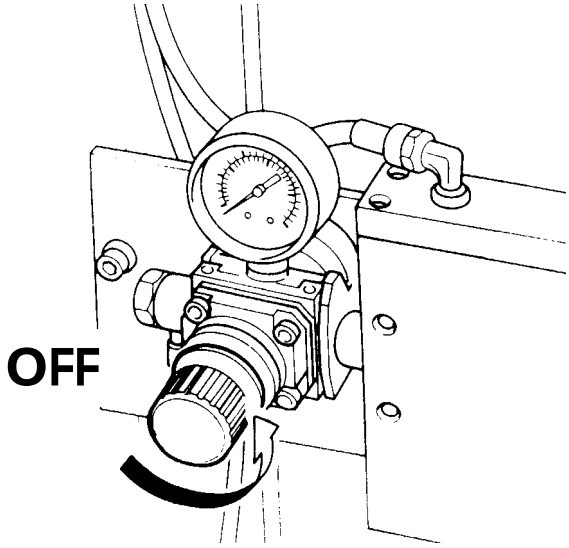

(d) Disconnect the tube **(B-16)** and the cable **(B-33)** of the magnetic limit switch **(B-13)**.

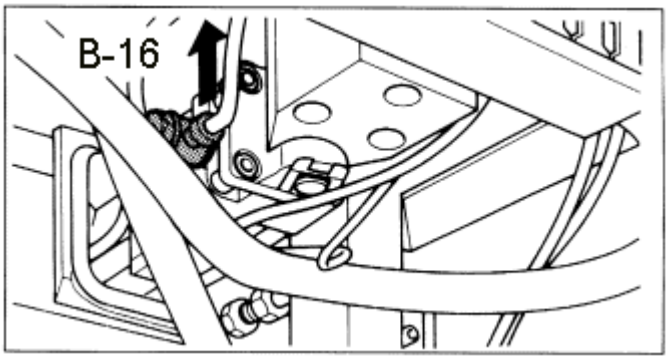

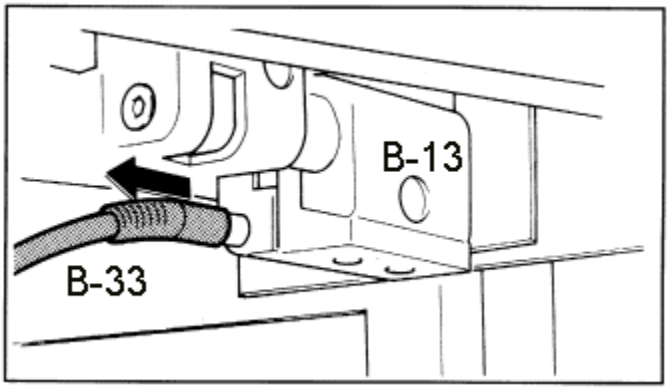

(e) Remove the pin from the fork **(B-11)**.

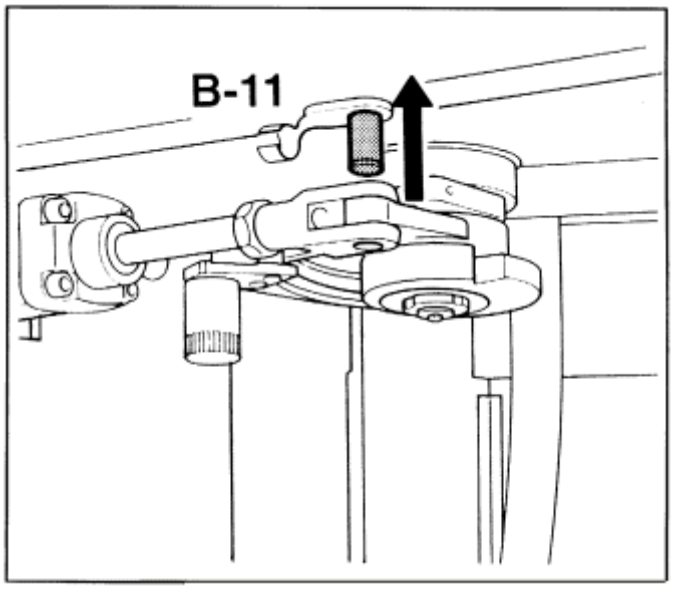

(f) Unscrew the 3 screws **(B-18)** that hold the block **(B-17)**.

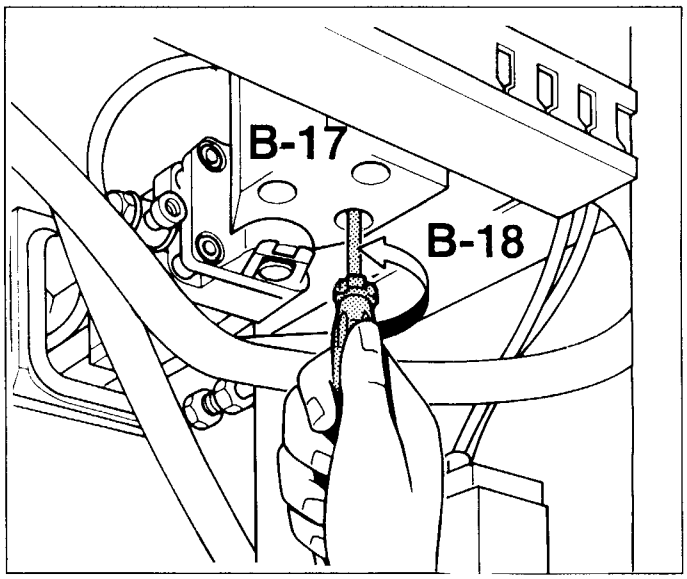

(g) Slip the whole group off sideways.

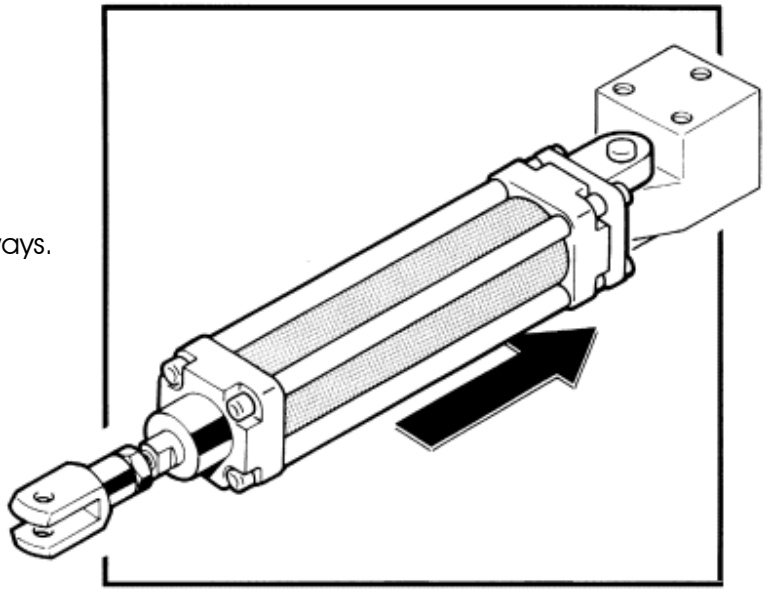

(h) On the workbench unscrew the 4 screws that hold the cylinder on the hinge **(B-14)**.

(i) Disconnect the cylinder from the hinge **(B-14)**.

(j) Unscrew the fork **(B-11)**.

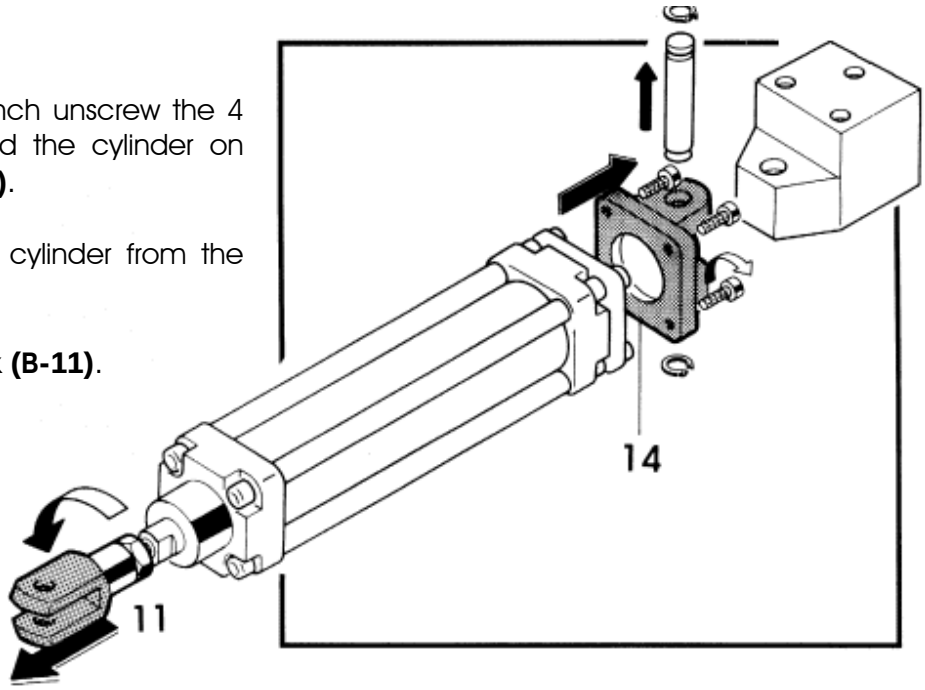

(B-12).7 Cylinder reassemble

The following operation must be done before placing the cylinder in the reactor .
On the cylinder there are 2 stroke end decelerators.
Their position is next to the air compressed inlets on the cylinder.

(a) Totally screw the 2 calibration screws

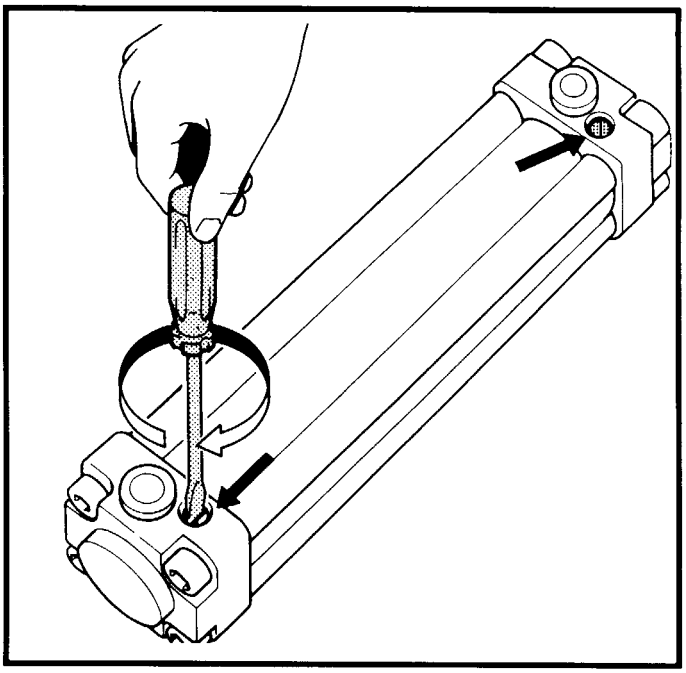

(b) Unscrew the 2 calibration screws ;
(2 complete turns each).

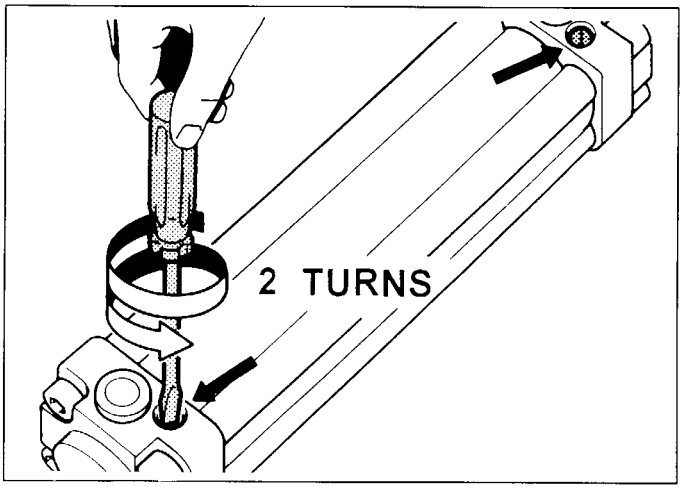

(c) Reassemble the fork **(B-11)** (see proper distance on the dwg group **(B)**).

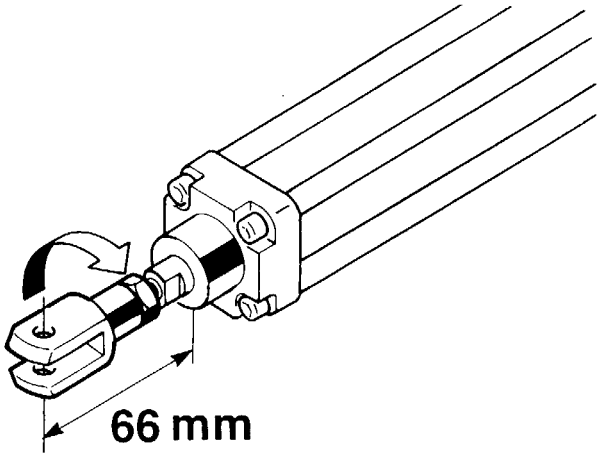

Place the cylinder in the reactor :

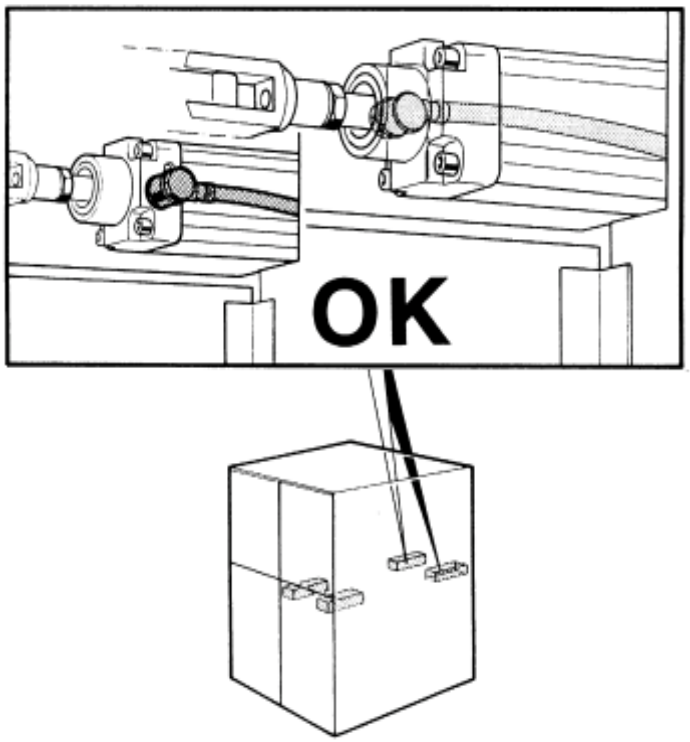

(a) Follow the removal procedure backward.
The air compressed inlets must be toward the opposite cylinder.

(B-12).8 Cylinder calibration

(B-12).8.1 Magnetic limit switch reassembling and calibration.

See the MAINTENANCE OPERATIONS **B-13 MAGNETIC LIMIT SWITCH** chapter

(B-12).9 Suggestions

Pneumatic connections

See the dwg. group (B) and
the pneumatic scheme (G)

(B-13) MAGNETIC LIMIT SWITCH

Before proceeding to any cleaning or maintenance, return to the MAIN MENU and select the REACTOR MAINTENANCE command.
This command is available only if the safety requirements are met (see the Operator manual).

(B-13).1 Special equipment needed for this item :

None

(B-13).2 Special tools needed for this item :

None

(B-13).3 Controls :

None

(B-13).4 Scheduled maintenance (PM) :

None

(B-13).5 Long term maintenance :

None

(B-13).6 Magnetic limit switch removal

None

(B-13).7 Magnetic limit switch reassemble

None

(B-13).8 Magnetic limit switch calibration

(a) Open completely the cam.

(b) Make sure that the pneumatic cylinder is at working stroke end.

(c) Unscrew the screw **(B-19)** that locks the limit switch.

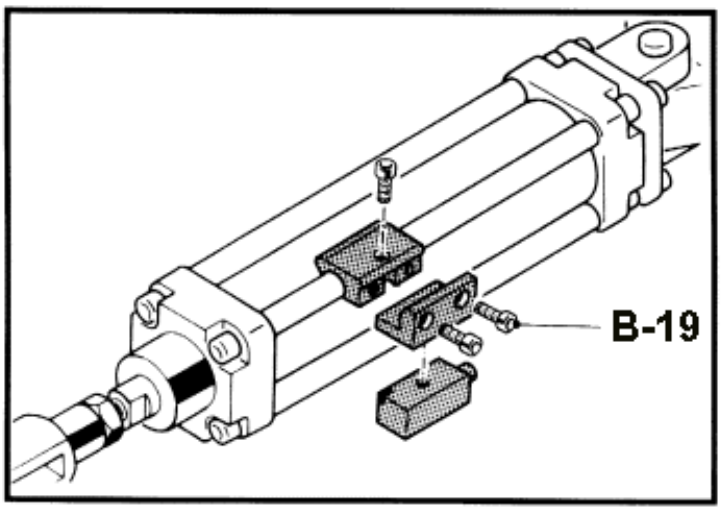

(d) Hold the limit switch onto the cylinder and move it back and forth until the relevant LED on the card **(4-5)** for station **A** or **(4-5)** for station **B** lights up (see "Schematic Wiring Machine Manual" **AP387C** for station **A**, **AP397C** for station **B** electrical connections, for further information).

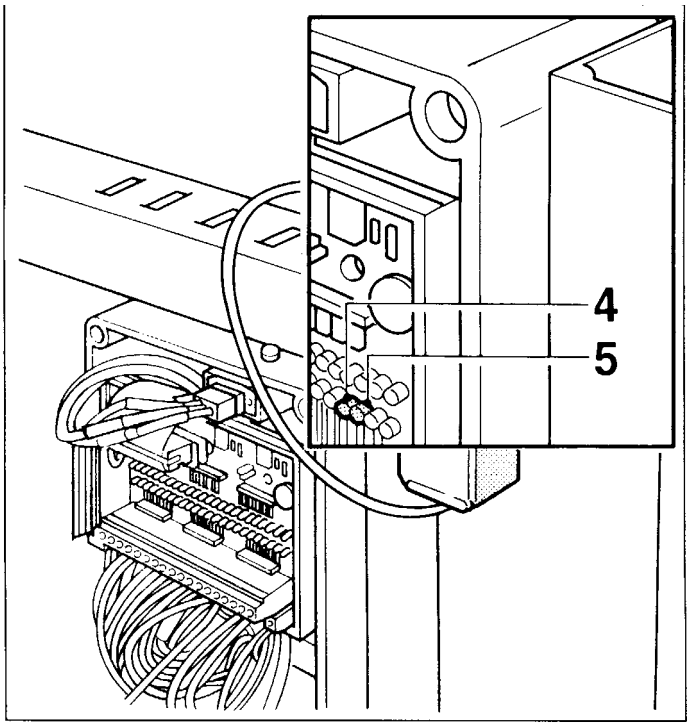

(e) Move the limit switch back and forth again and identify the area where the LED stays on.

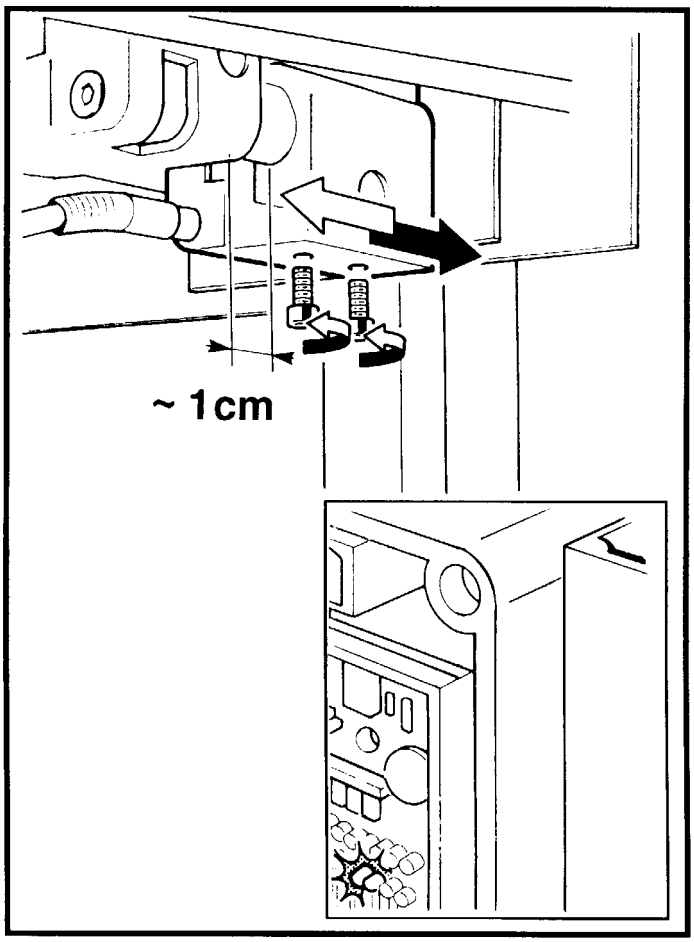

(f) Place the limit switch in the middle of this area.

(g) Push the limit switch against the cylinder and lock it through the screw.

(B-13).9 Suggestions

None

(B-20) PRESSURE REGULATOR

Before proceeding to any cleaning or maintenance, return to the MAIN MENU and select the REACTOR MAINTENANCE command.
This command is available only if the safety requirements are met (see the Operator manual).

(B-20).1 Special equipment needed for this item :

None

(B-20).2 Special tools needed for this item :

None

(B-20).3 Controls :

The pressure regulator controls, through the air compressed pressure value, the cams **(B-8)** clamping action force.
The pressure can be checked on the manometer **(B-21)**.
The pressure value must be between **1,6** and **2 bar**.

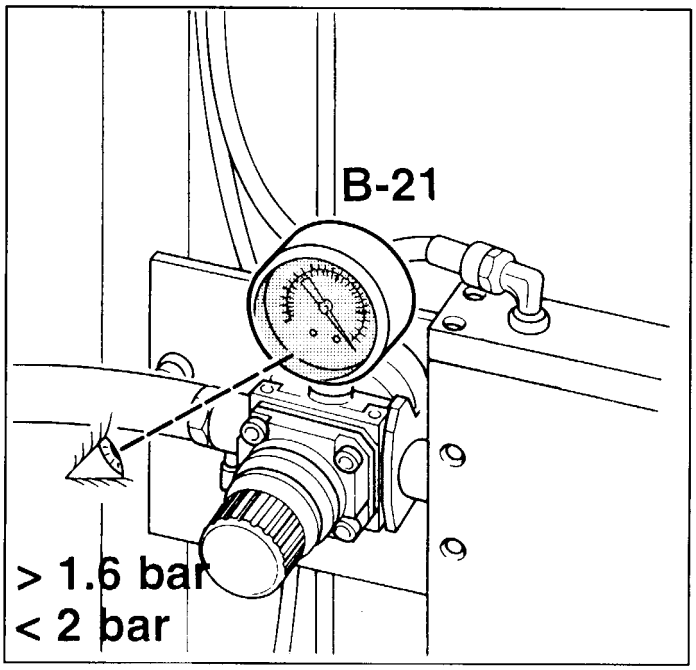

(B-20).4 Scheduled maintenance (PM) :

None

(B-20).5 Long term maintenance :

None

(B-20).6 Pressure regulator removal

This is a simple operation which does not require special instructions.

(B-20).7 Pressure regulator reassemble

This is a simple operation which does not require special instructions.

WARNING	Rotate the pressure regulation handle counterclockwise to shut off the regulator before connecting the air compressed to it. This is to avoid damages to the manometer due to initial overpressure .

(B-20).8 Pressure regulator calibration

Rotate the pressure regulation handle in order to read a pressure value between **1,6** and **2 bar** on the manometer **(B-21)**.

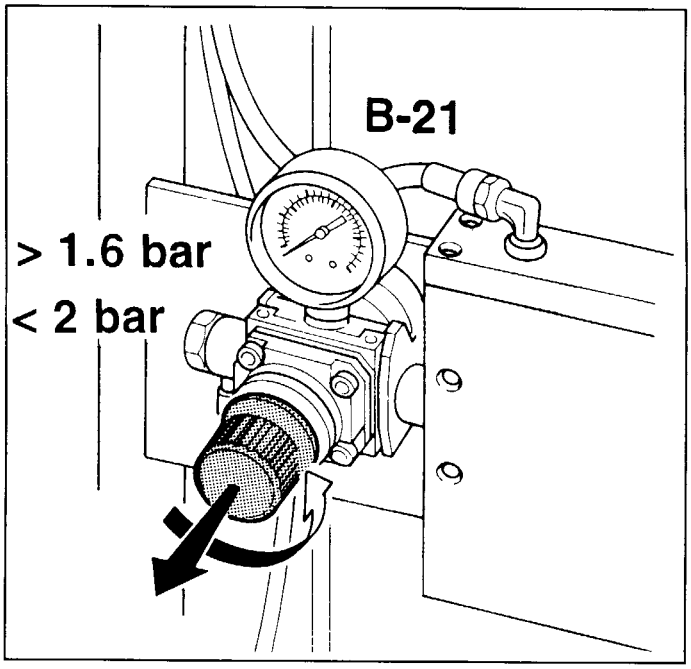

(B-20).9 Suggestions

If the cams do not properly work with a pressure lower than or equal to **2 bar**, the locker group **(B)** needs maintenance, refer to the proper section.

(B-24) FLOW REGULATOR

Before proceeding to any cleaning or maintenance, return to the MAIN MENU and select the REACTOR MAINTENANCE command.
This command is available only if the safety requirements are met (see the Operator manual).

(B-24).1 Special equipment needed for this item :

None

(B-24).2 Special tools needed for this item :

None

(B-24).3 Controls :

None

(B-24).4 Scheduled maintenance (PM) :

None

(B-24).5 Long term maintenance :

None

(B-24).6 Flow regulator removal

No special instructions

(B-24).7 Flow regulator reassemble

No special instructions

(B-24).8 Flow regulator calibration

The flow regulator connection to the outlet **A** of the distributor **(B-23)** controls the opening speed.
The flow regulator connection to the outlet **B** of the distributor **(B-23)** controls the closing speed.
Trim the micrometric screws until the pneumatic cylinder **(B-12)** fully opens/closes in **3** to **5** seconds.

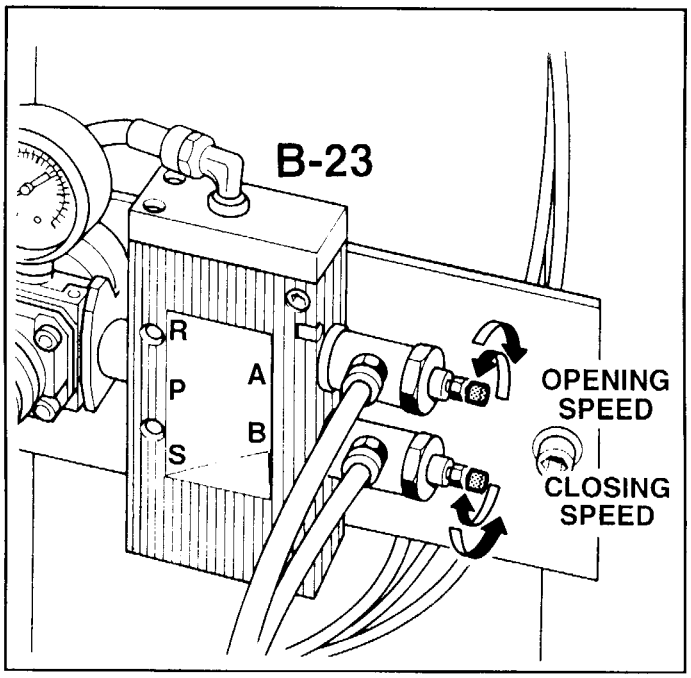

(B-24).9 Suggestions

None

(D-1) SHUTTER PLATE

CAUTION Before beginning the following maintenance operations, make sure that the quartz-guard is always backed, because in REACTOR MAINTENANCE, the safety photocell of the quartz-guard does not work and there can be interference with quartz-guard during shutter plate movement, with possible damages.

Before proceeding to any cleaning or maintenance, return to the MAIN MENU and select the REACTOR MANAGEMENT command.
This command is available only if the safety requirements are met (see the Operator manual).

(D-1).1 Special equipment needed for this item :

- Safety glass
- Special gloves,

(D-1).2 Special tools needed for this item :

- Caliper
- A small tank to collect the residual water
- DI water solution

(D-1).3 Controls :

None

(D-1).4 Scheduled maintenance (PM) :

Cleaning

• external surface of the shutter plate

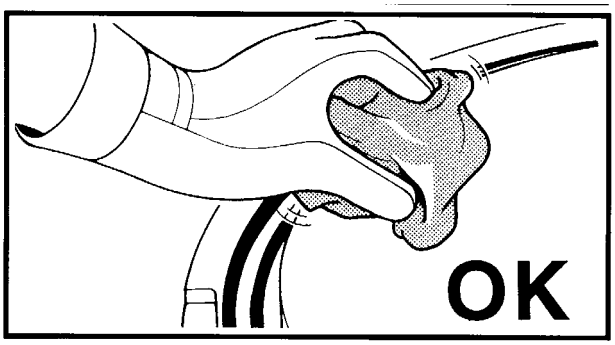

• external surface of the exhaust gas manifold, (particularly where there is the sealing with the exhaust valve O-ring)

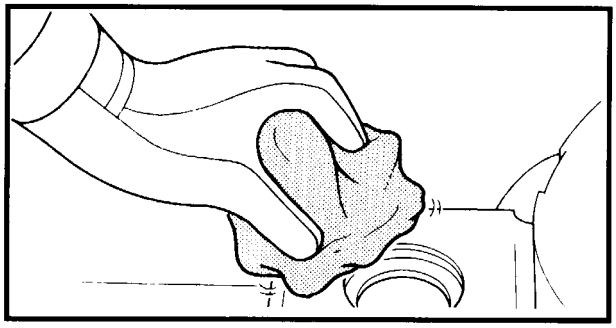

• inner surface of the O-ring grooves **(D-2) (D-22)** in case of O-ring replacement
These parts must be cleaned at every scheduled PM and must be kept free from scale and deposits .
To clean these parts , gently use a soft lintfree wet cloth soaked in DI water.
To clean the O-ring grooves , use a soft lintfree wet cloth and gently clean the groove using it wrapped around a plastic stick of the proper size.
Be careful in order to avoid damages / scratches to the groove surface or edge.
After cleaning carefully wipe with a soft lintfree soft cloth .

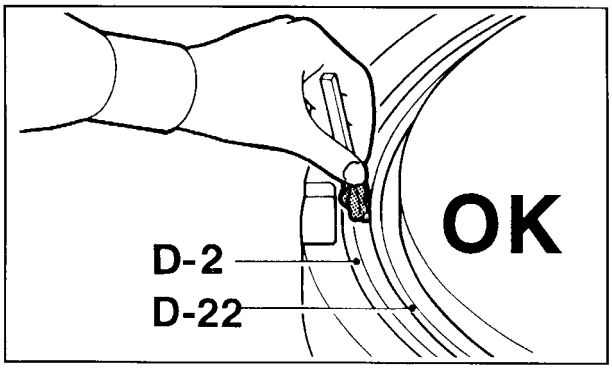

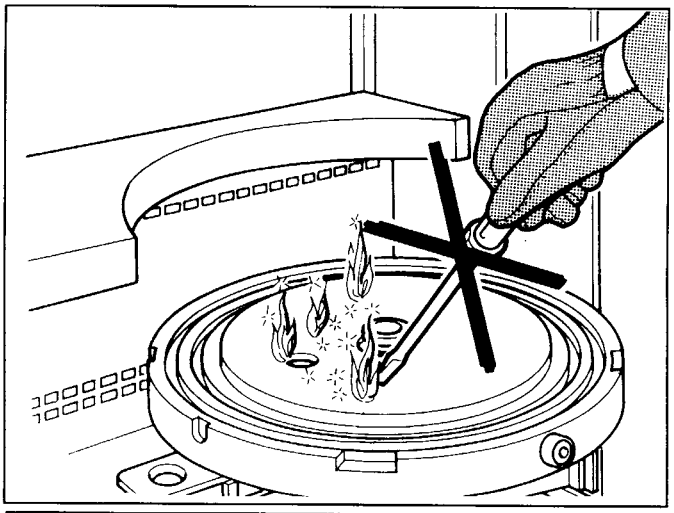

CAUTION The scale and the deposits on the shutter plate can easily catch fire in case of wrong handling .
Do not use dry cloths , do not use screw drivers or similar tools to remove the scale and the deposit.

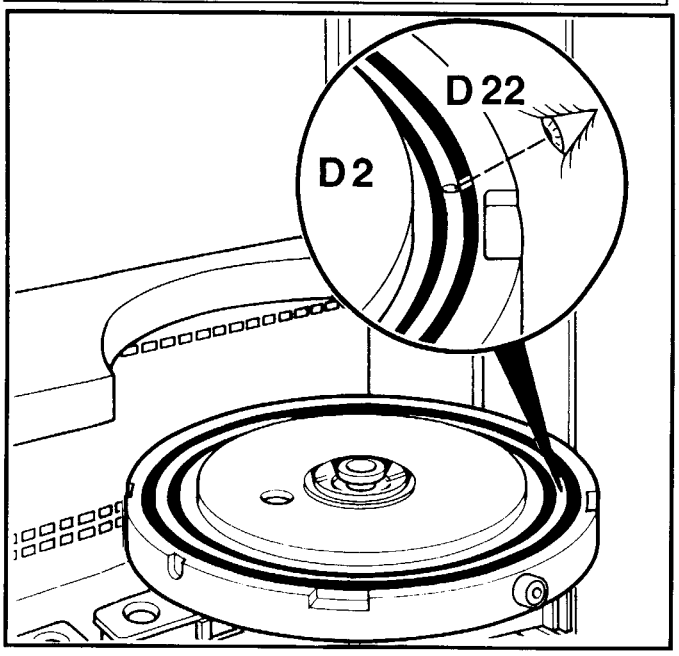

WARNING During the cleaning procedure make sure that the hole used for the O-ring leak test is not clogged .

The hole is situated between the O-rings **(D-2) (D-22)** and close to the connection **(D-23)**.
The O-rings **(D-2) (D-22)** must be replaced according to the PM program and in any case when there are signs of abrasion or cut.
The O-rings groove must be always cleaned before the O-ring replacement.

In order to clean the hole, to test the vacuum among the O/R, carry out the following operations:

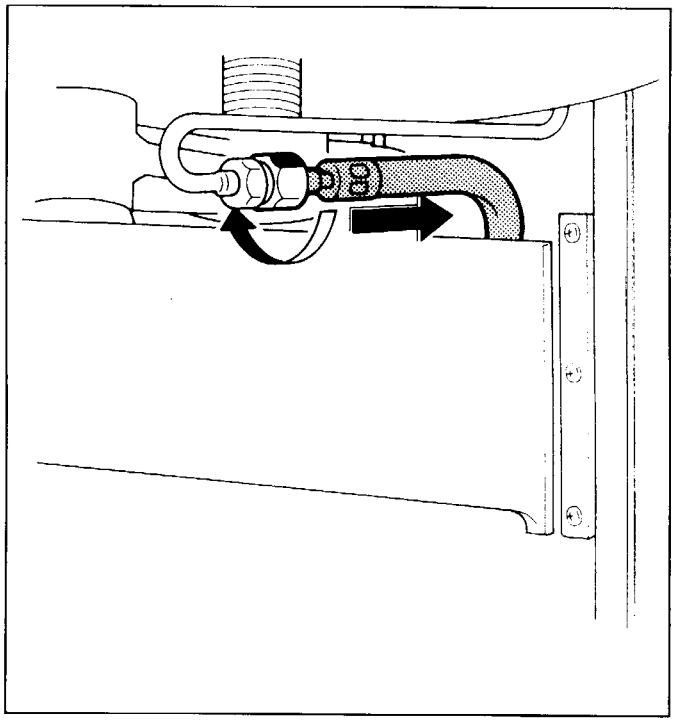

CAUTION Check that the vacuum pump is disconnected.

(a) Disconnect from the rubber tube the vacuum small pipe placed under the shutter plate.

CAUTION Moisten all the tubes and pipes with a wet rag before puffing nitrogen inside.

(b) Let nitrogen into the pipe so that all impurities go out of the hole over the shutter plate.

CAUTION In the pipe there can be dangerous process residual, provide yourself with safety glass and pay main attention not to get splashed with the nitrogen flow.

(c) Verify that the nitrogen comes out of the hole. If it doesn't, keep the duct blown with nitrogen for a while, until it is free.

(d) Disconnect the rubber tube from the manual valve of the vacuum pump.

(e) Blow nitrogen into the rubber tube downstream, towards the manual valve just disconnected.

(f) Reconnect the rubber tube with the manual valve of the vacuum pump and with the small pipe under the shutter plate.

(g) Following the procedure described in cap. 24 pag.144 verify that the vacuum value is below **-0.2 bar** with shutter plate open.

(h) If the test fails and the duct is still clogged, repeat all the disassembly operations up to the rubber tube disconnection from the small pipe under the shutter plate.

(i) Using non-metallic tools penetrate into the hole to remove the impurities from the top; then blow nitrogen into it and verify that the gas comes out of the hole.

CAUTION Take care not to cause sparks with sharpened tools, while penetrating into the shutter plate hole.

(j) If, nevertheless, the duct is still clogged, do the following steps: at first, place the shutter plate at a distance of about 230 mm from the load chamber roof.

(k) Remove the rotation group (see group H). Remove nut, belt and pulley. Slip the shaft off.

(l) Unscrew the four screws that keep the group together. Now the group is free to rotate

(m) Spin the shutter plate clockwise, lifting it slightly to jump the jutting nut. Pay attention that the water inlet and outlet pipes don't hamper the rotation (in such a case it could be worthwhile to cut the wrapper and push the outlet pipe inwards). Place the shutter plate with the locking nut leaned on the shutter plate support (be sure that the distance between the outer profile of the elbow connection and the reactor wall is about 70 mm).

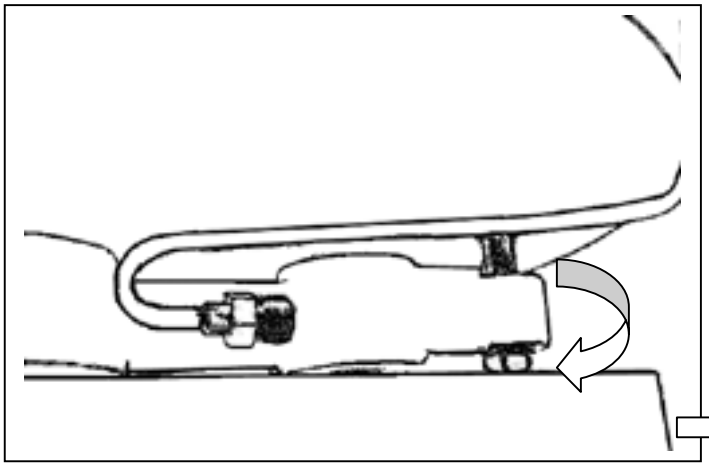

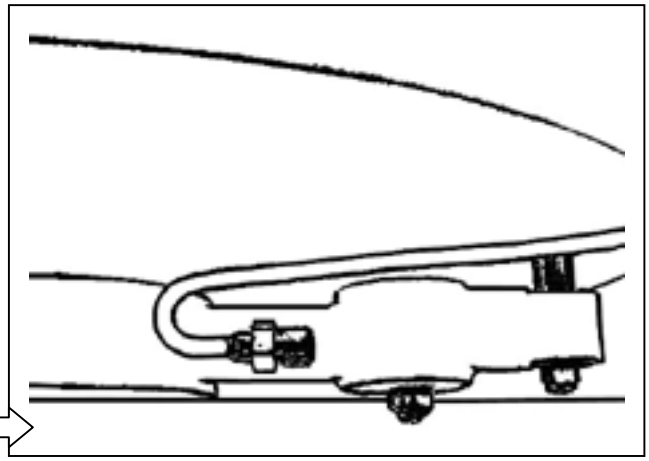

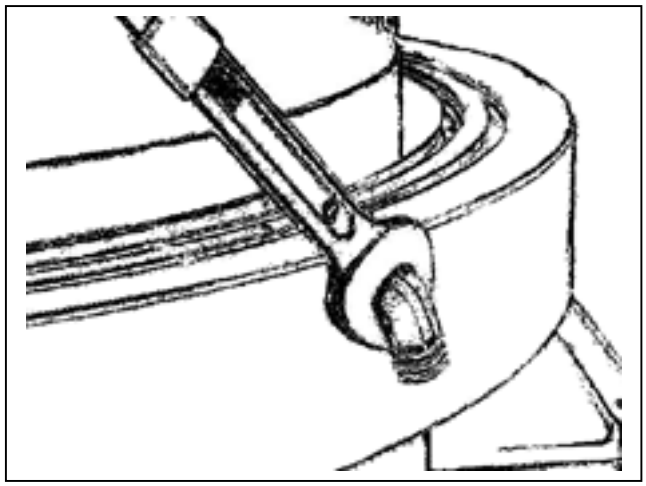

(n) Remove the pipe (ST. ST. tube 6,35).

(o) Dismantle the connection SS-400-2-2, unscrew the elbow 1/8 NPT/Swagelok (SWK) 6,35 plug.

(p) Remove the dirt inside the duct using non-metallic tools to penetrate into it (pay attention not to cause sparks!). Finally blow within it with nitrogen.

(q) Verify that the pipe itself (ST. ST. tube 6,35) is not clogged. If it is blocked clean it up by dipping it in de-ionized water and then air out with nitrogen.

(r) Restore the elbow connection SS-400-2-2 in the former position (maximum distance from the shutter plate edge: 16-17 mm) so that one of the sides of the hexagon is perfectly parallel to the wall.

(s) Assemble the pipe (ST. ST. tube 6,35) connecting it with the elbow 1/8 NPT/Swagelock (SWK) 6,35 plug. Be sure that it is placed the closest as possible to the shutter plate.

(t) Lift the shutter plate very slowly, so to adjust manually, step by step, its position with respect to the valve. When the shutter plate has been properly centred, tighten the four screws.

(u) Control the centring, moving up and down the shutter plate.

(v) Connect the pipe (ST. ST. tube 6,35) with the VCO.

(w) Reinstall the rotation group.

(x) Reconnect the vacuum small pipe and, if necessary, power up the pump again.

(y) After having reassembled the bell, carry out the vacuum test and verify that the pressure value measured in the manometer has reached **-0.8 bar**.

(D-1).5 Long term maintenance :

Contact LPE offices for information on shutter plate refurbishing

(D-1).6 Shutter plate removal

Remove the rotation group.
This operation involves the whole disassembling of the **D group**.

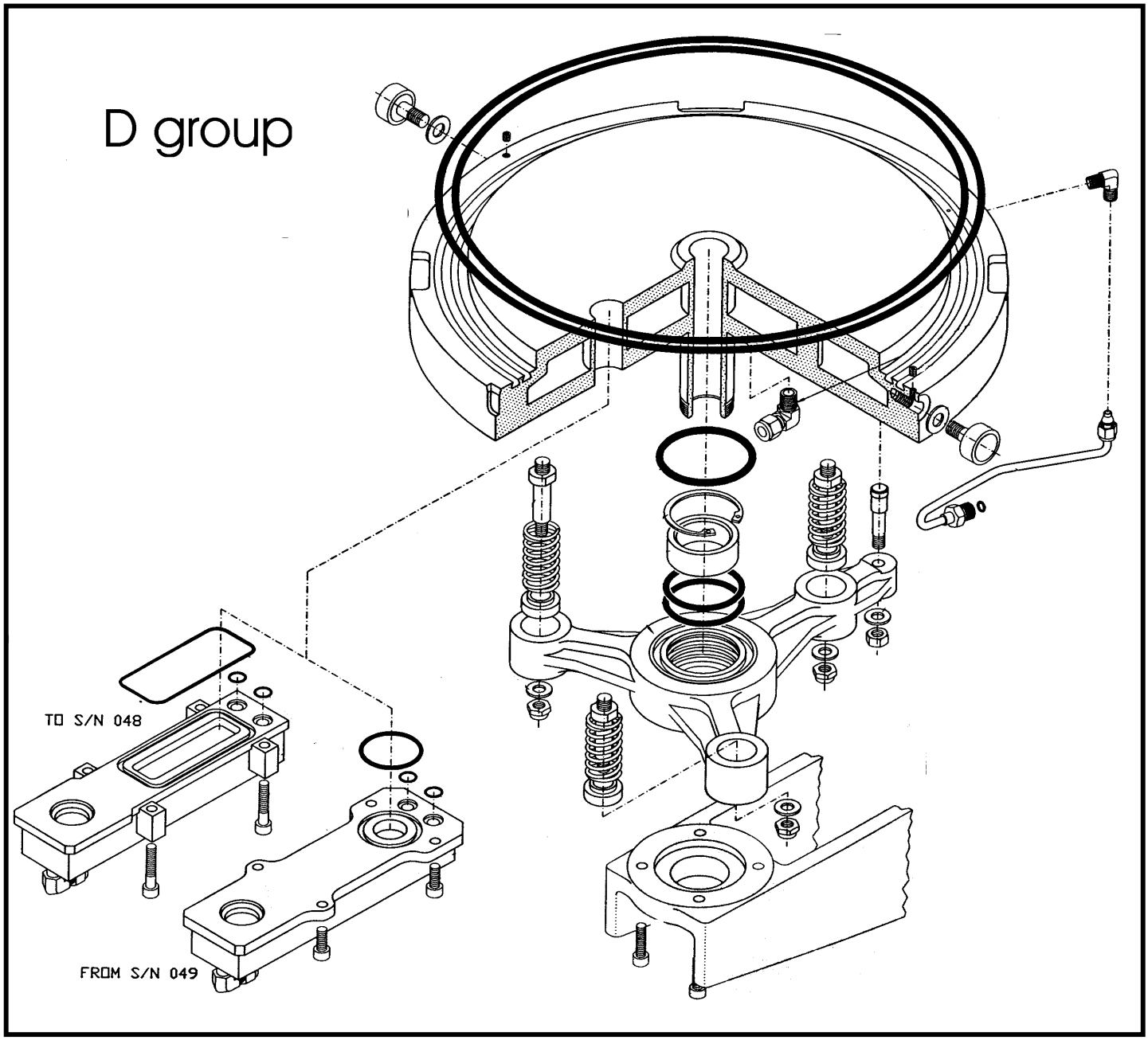

(D-1).6-1 On the reactor

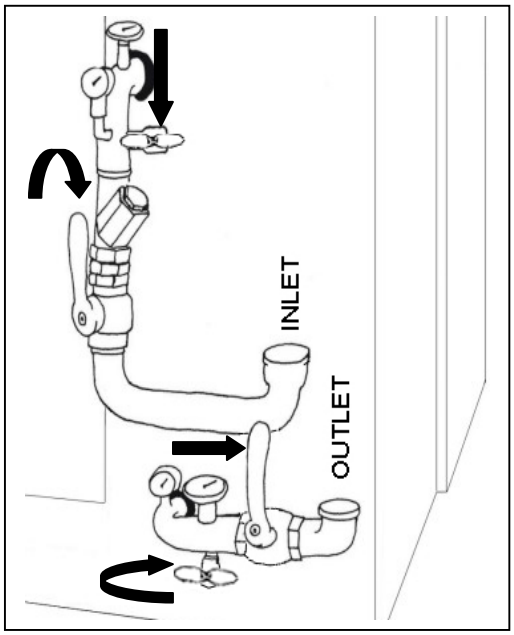

(a) Shut off the **DI** water outlet

(b) Shut off the **DI** water inlet

(c) Empty the water left in the reactor from the lowest point.

(D-1).6-2 On the shutter plate

WARNING	Provide a small tank before this operation, there could be some residual water in the shutter plate.

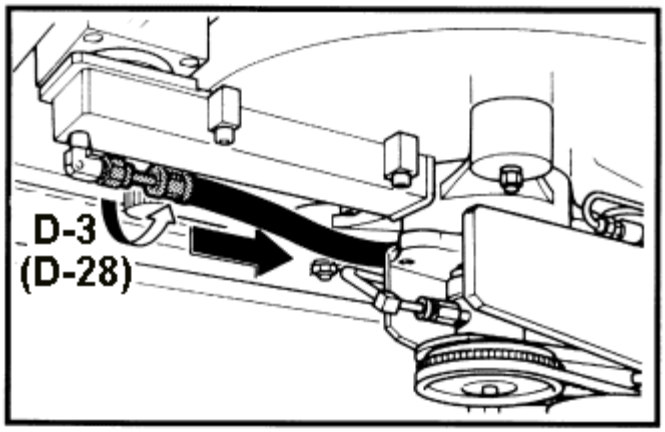

(a) Disconnect the water pipe on the exhaust collector **(D-3** from s/n 049 and **D-28 to** s/n 048**)**

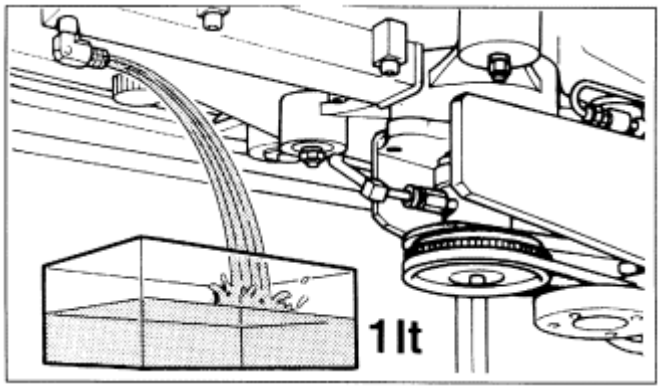

(b) Unplug the water inlet pipe and empty the water left in the connection and in the pipe **(about 1 liter)**.

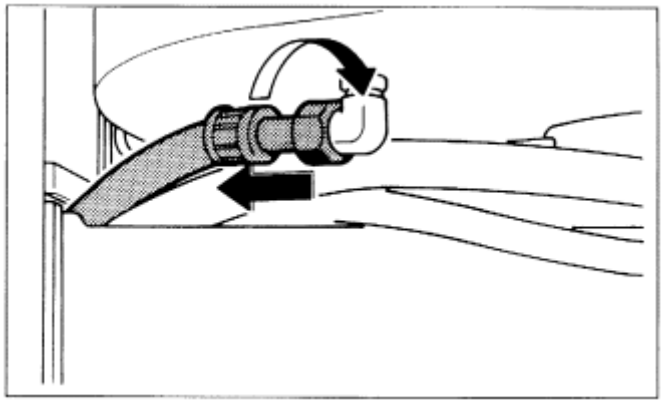

(c) Disconnect the water pipe on the shutter plate.

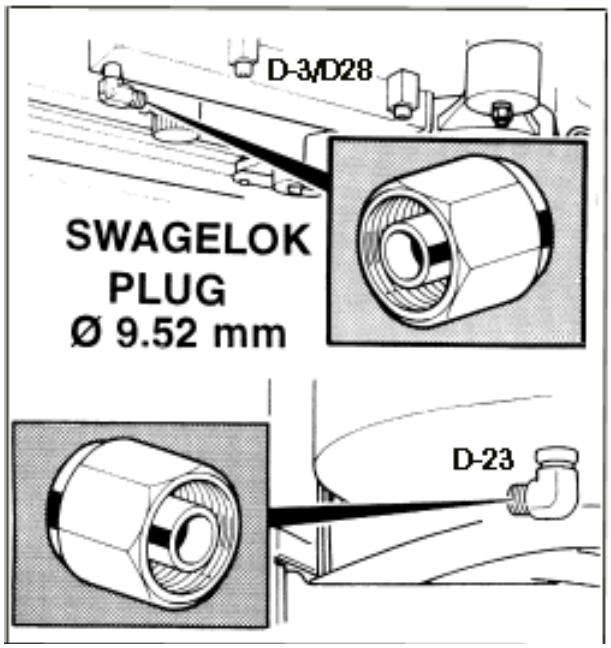

(d) Plug with a Swagelok plug (dia 9,52) the two connections just opened

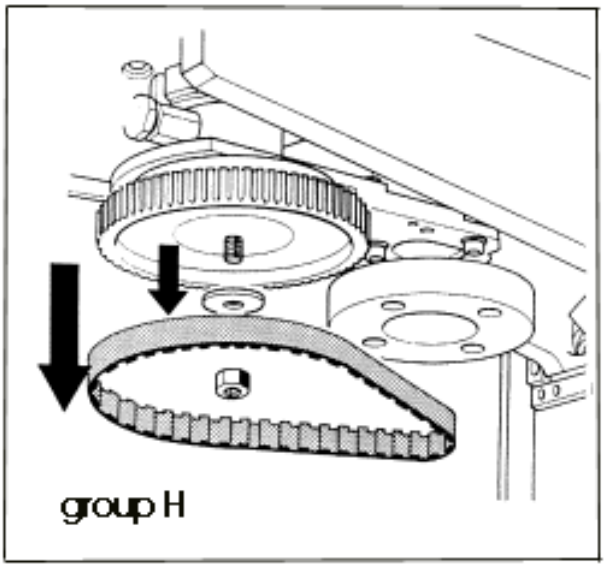

(e) Remove the rotation group (see **group H**).

(f) Remove nut, belt and pulley.

⚠ CAUTION **The weight of this group is about 60 kg.**

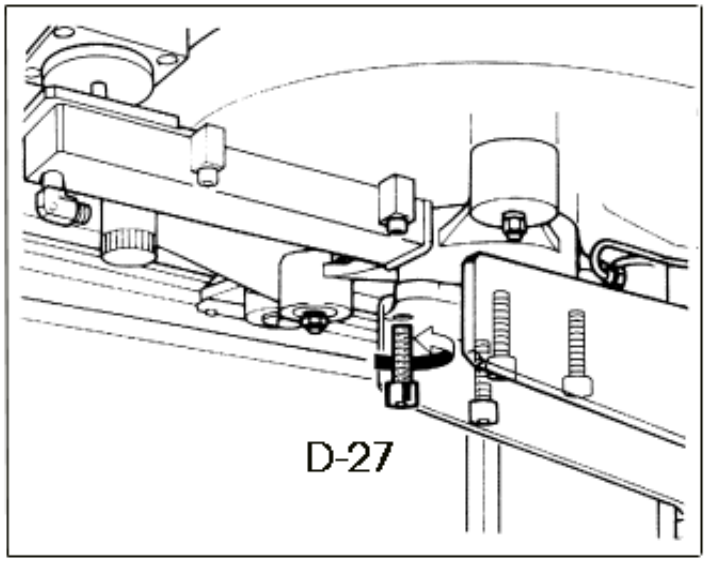

(g) Remove the shutter plate by unscrewing **(D-27)**.

(h) Turn the shutter plate upside down.

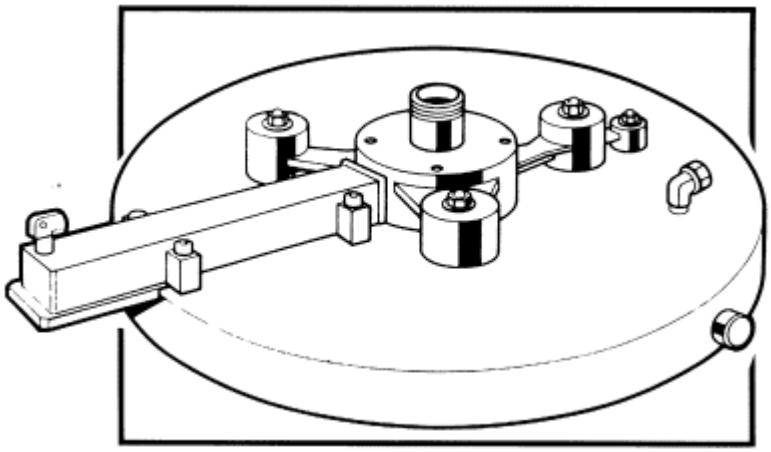

(i) Uniformly unscrew the 3 locking nuts **(D-13)**.

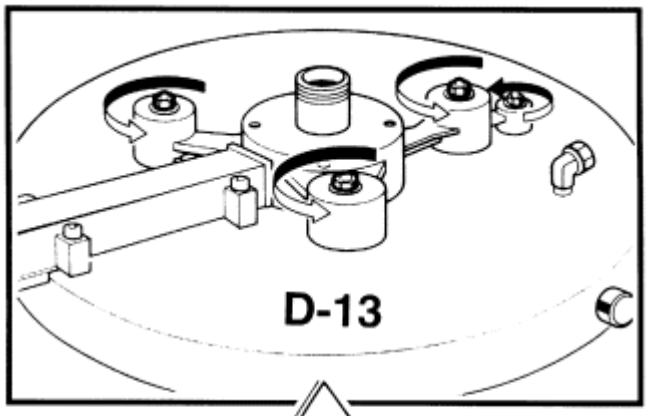

(j) Remove the 3 stud bolts **(D-15)**.

(k) Remove the 4 screws **(D-21)** from s/n 049 or **(D30)** to s/n 048.

(l) Remove the exhaust manifold **(D-3)** from s/n 049 or **(D-28)** to s/n 048.

(m) Dismantle the **1/4NP connections (D-26)**, unscrew the elbow, pay attention to the orientation.

(n) Unscrew the grub-screw **(D-18)** and remove the pin-rollers **(D-19).**

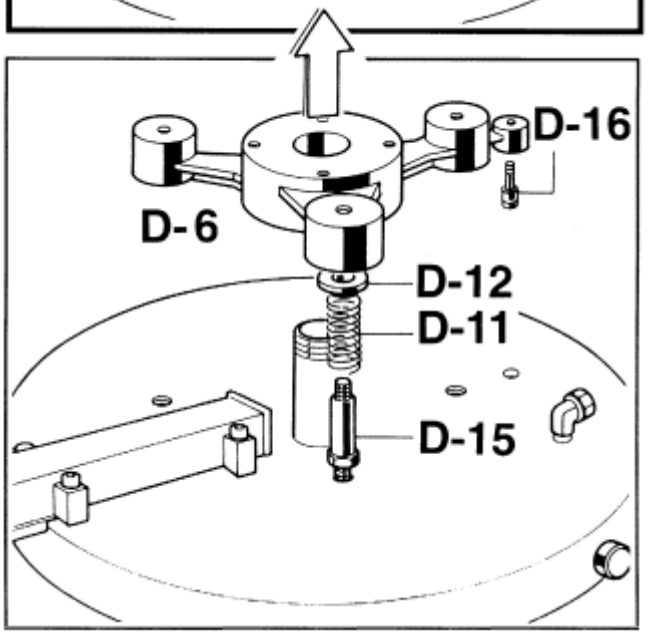

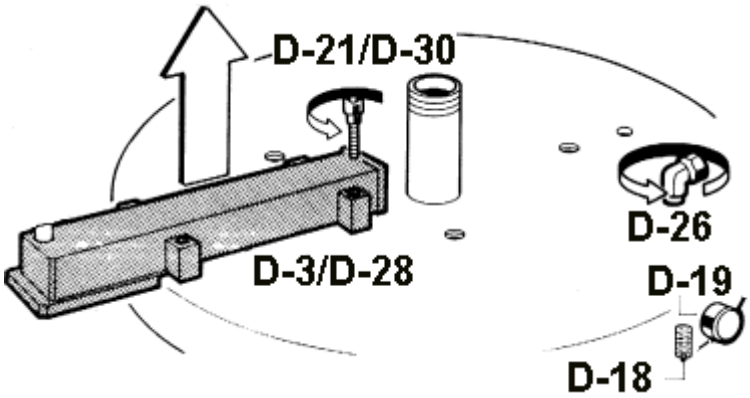

(D-1).7 Shutter plate reassemble

(a) Keep the shutter plate upside down

(b) Tighten the 3 stud bolts **(D-15)**.

For each bolt :

(c) Insert in the stud bolt the spring **(D-11)**.

(d) Insert the collar **(D-12)**.

(e) Screw the water outlet connection **1/4 NPT** with the correct orientation (see shutter plate disassembling, item **(k) .**

(f) Fit up the support **(D-6)**.

WARNING	The position of the pin **(D-16)** must be in correspondence of the shutter plate groove.

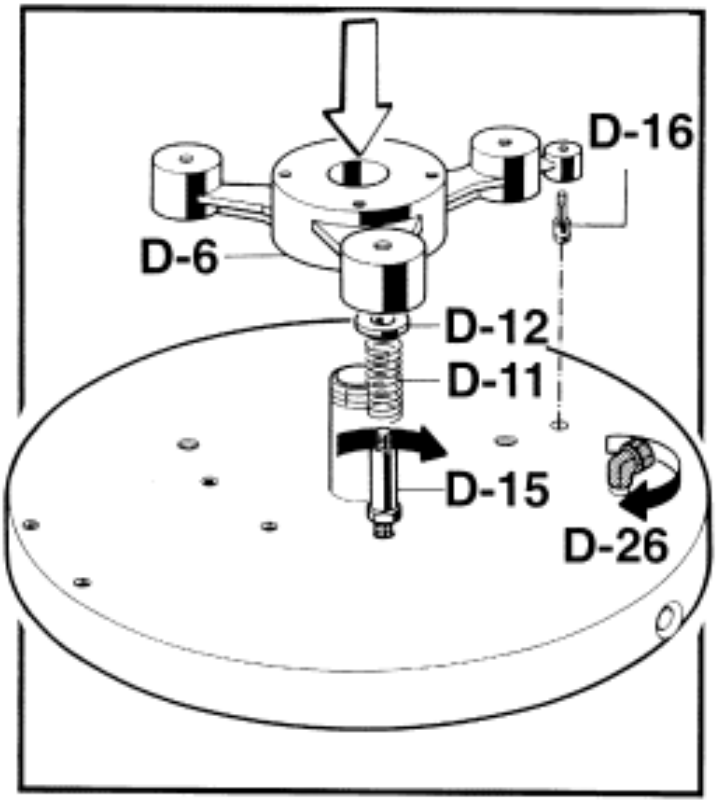

(g) Fit up the 3 washers **(D-14)**.

(h) Uniformly screw the 3 locking nuts **(D-13)** as much as possible (anyway do not tighten them).

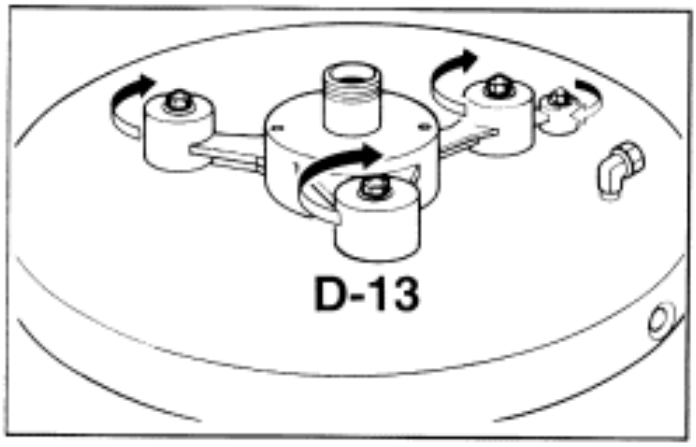

(i) Fit up the 2 pin rollers **(D-19)** the washer **(D-20)** and tighten the grub- screw **(D-18)**.

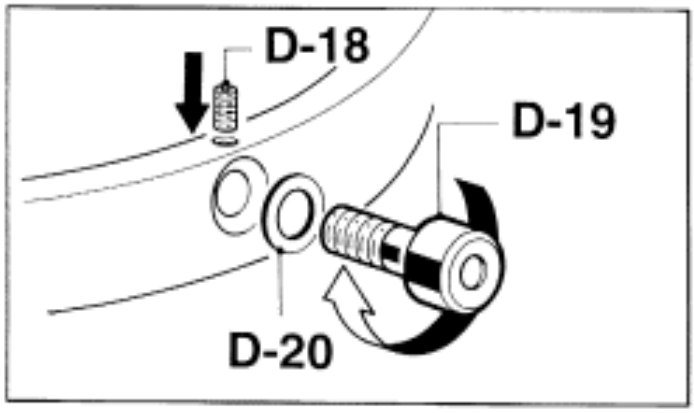

(j) Put back the shutter plate on the lift mechanism.

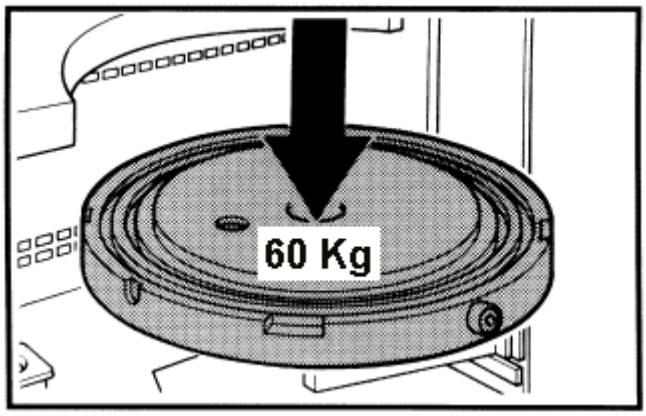

CAUTION **The weight of this group is about 60 kg.**

(k) Screw the 4 screws **(D-27)** but do not tighten them

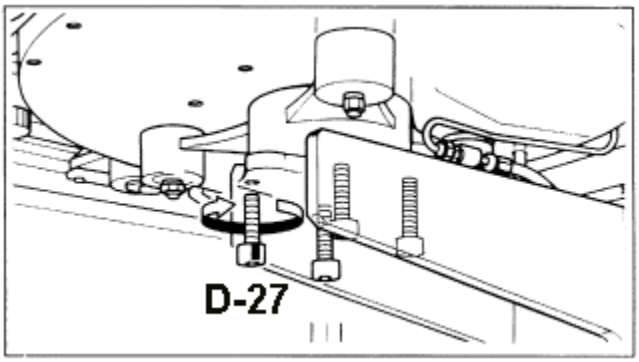

(k) Lift up the shutter plate and stop the movement at about **20 mm** from the bell-jar ring **(C-1)**.

(m) Rotate the shutter plate in order to align the shutter plate groove with the milled tooth on the bell-jar ring **(C-1)**.

(n) Lift up the shutter plate completely (against the bell-jar ring **(C-1)**).

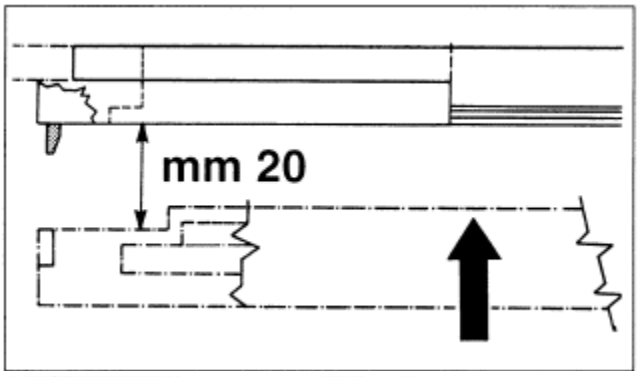

(o) Tighten the 4 screws **(D-27)**.

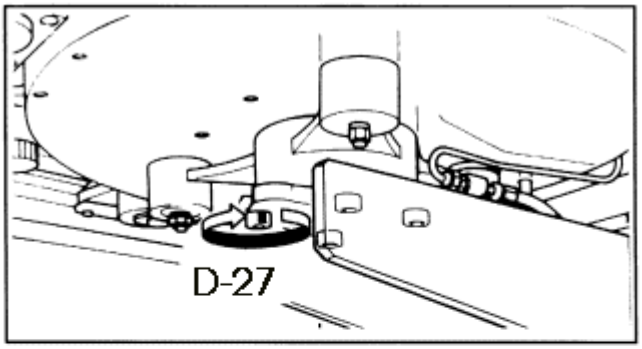

(o) Fit up the exhaust manifold **(D-3)** from s/n 049 or **(D-28)** to s/n 048 (see description in the MAINTENANCE OPERATIONS **D-3 EXHAUST MANIFOLD**)

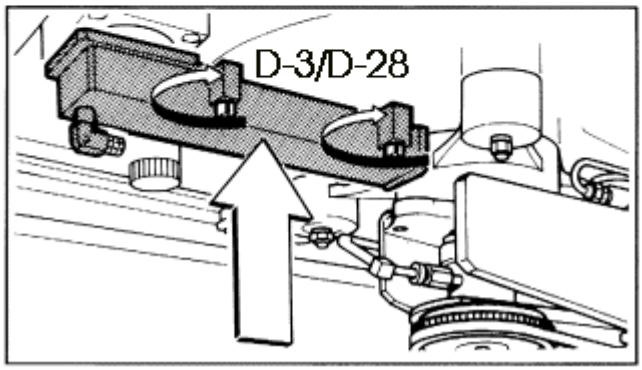

(D-1).8 Shutter plate calibration

(D-1).8.1 Shutter plate levelling.

WARNING The shutter plate levelling is normally performed **after** a shutter plate removal and assembling. If the shutter plate levelling is made **without** having performed the assembling, then it is **mandatory** to uniformly screw the 3 locking nuts **(D-13)** as much as possible (anyway do not tighten them) **before** proceeding with the levelling operation described forth. This is to give enough load to the springs even after the levelling. If the springs do not have enough load , the lift motion , due to the susceptor weight , is not smooth.

(a) Get a caliper ready

(b) Remove the SS upper shield **(A-65)** for **A** side or **(A-66)** for **B** side.

(c) Lift down the shutter plate and stop the movement at about **20 mm** from the bell-jar ring **(C-1)**.

(d) Measure the gap between shutter plate and bell-jar ring in three positions (in correspondence to the 3 locking nuts **(D-13)**).

(e) The alignment is correct if the difference among the three measures does not exceed **0,2 mm**.

If the difference exceeds **0,2 mm** the three locking nuts **(D-13)** must be adjusted.

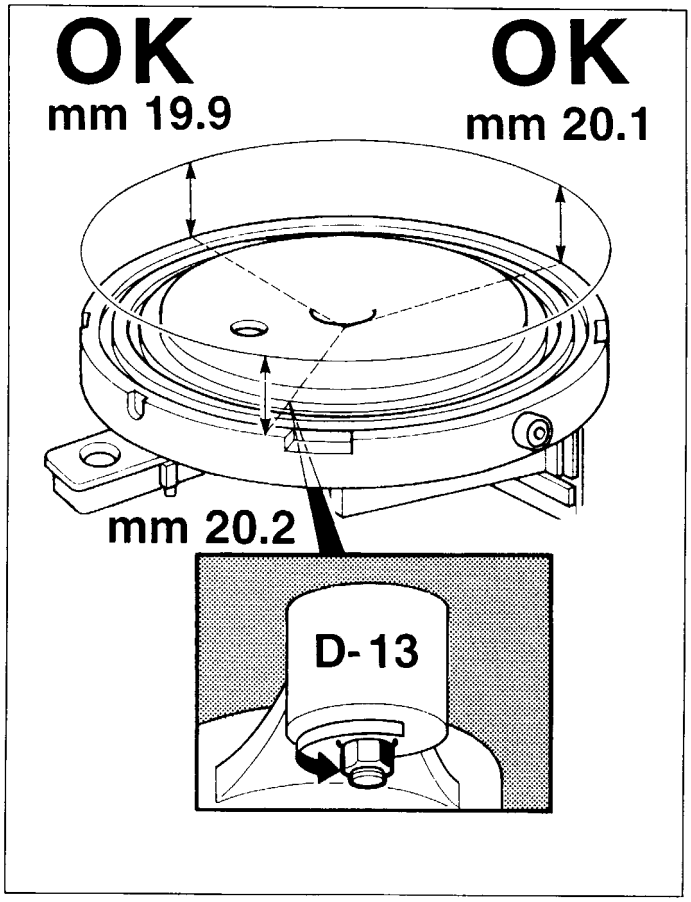

To adjust the three locking nuts :

(f) Unscrew the locking nut with the highest distance.

WARNING Unscrewing the locking nut , the shutter plate is lifted up by **1,5 mm** per each turn of the locking nut

(g) Repeat step **(f)** until levelling is correct but make sure not to unscrew the locking nut that originally had the shortest distance.

(D-1).9 Suggestions

None

(D-3) EXHAUST MANIFOLD

Before proceeding to any cleaning or maintenance, return to the MAIN MENU and select the REACTOR MAINTENANCE command.
This command is available only if the safety requirements are met (see the Operator manual).

CAUTION Only the personnel authorized to handle acids is allowed to carry out any cleaning and washing operation on this group.

CAUTION Dip the EXHAUST MANIFOLD in water and wash it before using acids. Failing to do so would cause violent explosions with serious damage to the maintenance engineer.

(D-3).1 Special equipment needed for this item :

- Acid fumes hood
- All individual protections for the personnel working in contact with acids.

(D-3).2 Special tools needed for this item :

- A small tank to collect the residual water
- Solution of 100cc Nitric, 300cc Hydrofluoric in 1000cc Water (H_2O)
- Metric wrenches (M8).

(D-3).3 Controls :

None

(D-3).4 Scheduled maintenance (PM) :

Keep the following parts clean :

- external surface, particularly where there is the sealing with the exhaust valve O-rings **(L-4)**, **(L-5)**.

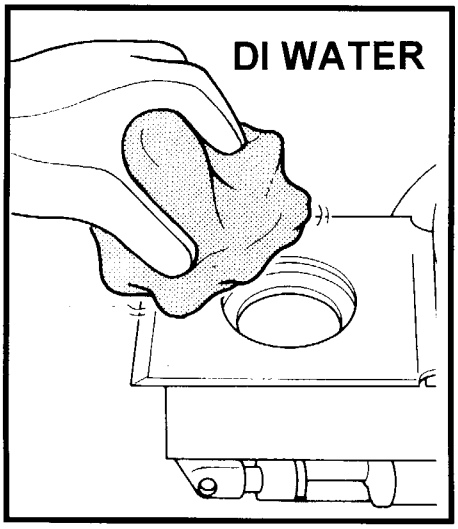

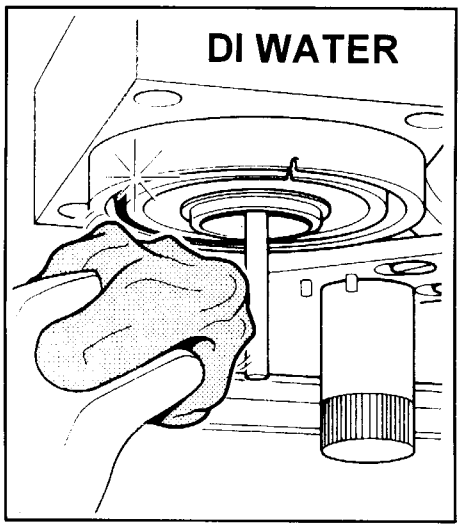

These parts must be cleaned at every scheduled PM and must be kept free from scale and deposits .
To clean these parts , gently use a soft lintfree wet cloth soaked in DI water.
Be careful in order to avoid damages / scratches to the surface or edge.
After cleaning carefully wipe with a soft lintfree soft cloth .

CAUTION The scale and the deposits on the exhaust manifold can easily catch fire in case of wrong handling . Do not use dry cloths , do not use screw drivers or similar tools to remove the scale and the deposit.

(D-3).5 Long term maintenance :

(a) Remove the exhaust manifold (see Exhaust manifold removal)

(b) Clean it in a acid fumes hood with a nitric / Hydrofluoric solution

⚠ **CAUTION** Only the personnel authorized to handle acids is allowed to carry out any cleaning and washing operation on this group.

⚠ **CAUTION** Dip the EXHAUST MANIFOLD in water and wash it before using acids. Failing to do so would cause violent explosions with serious damage to the maintenance engineer.

(c) Reassemble it (see Exhaust manifold removal).

(D-3).6 Exhaust manifold removal

(a) Close the shutter plate (lift up) (**the locker group must be locked**).

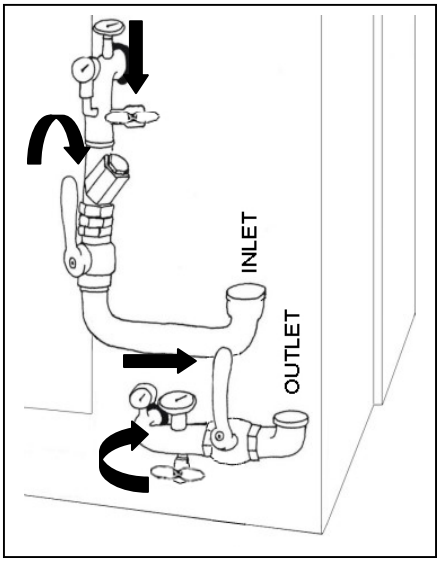

On the reactor

(b) Shut off the DI water outlet

(c) Shut off the DI water inlet

(d) Empty the water left in the reactor from the lowest point

On the exhaust manifold

WARNING Provide a small tank before this operation, there will be some residual water in the exhaust manifold.

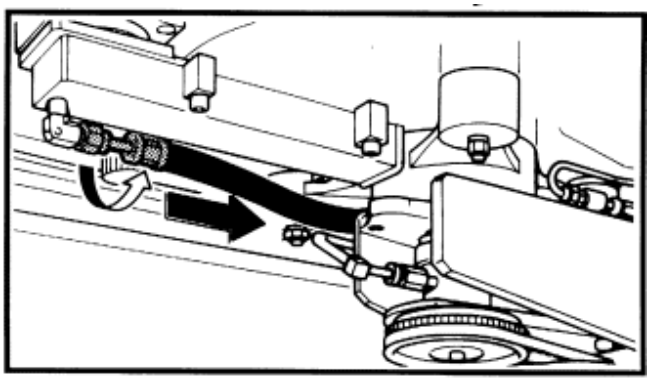

(e) Unplug the water inlet pipe and empty the water left in the connection and in the pipe (about 1 liter).

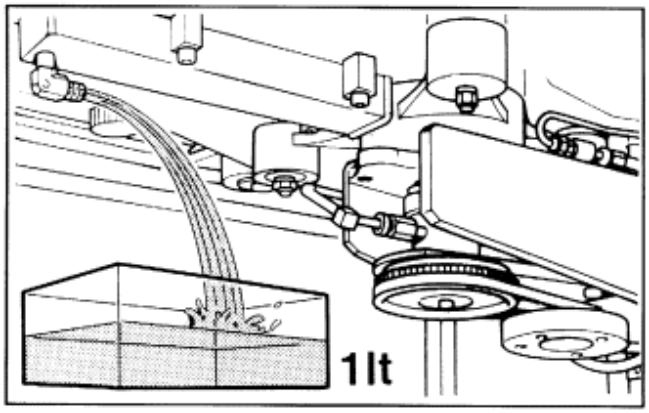

(f) Unscrew the 4 screws **(D-21)** from s/n 049 or **(D-30)** to s/n 048, by means of the metric wrenches **(M8)**.

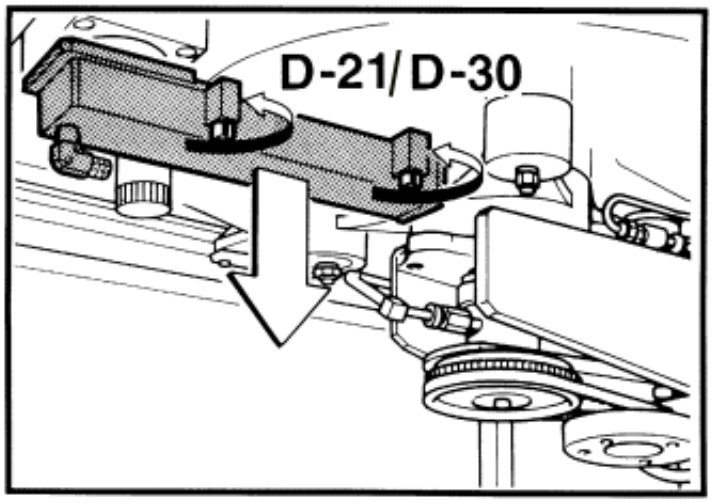

(D-3).7 Exhaust manifold reassemble

WARNING (a)	When disassembling the EXHAUST MANIFOLD, ALWAYS replace the O-ring **(D-4)** and the **2** O-rings **(D-5)** from s/n 049, or **(D-29)** and **(D-5)** to s/n 048

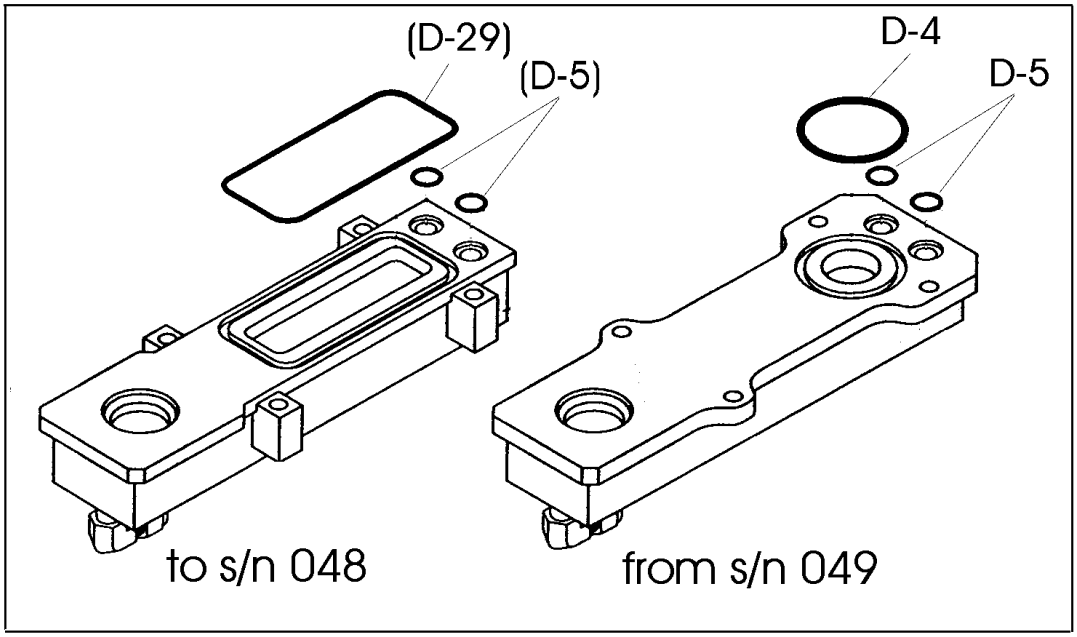

(b) Open the shutter plate of about **300 mm**.

(c) Reassemble the exhaust manifold without tightening the screws **(D-21)** or **(D-30)** metricwrenches **(M8)**.

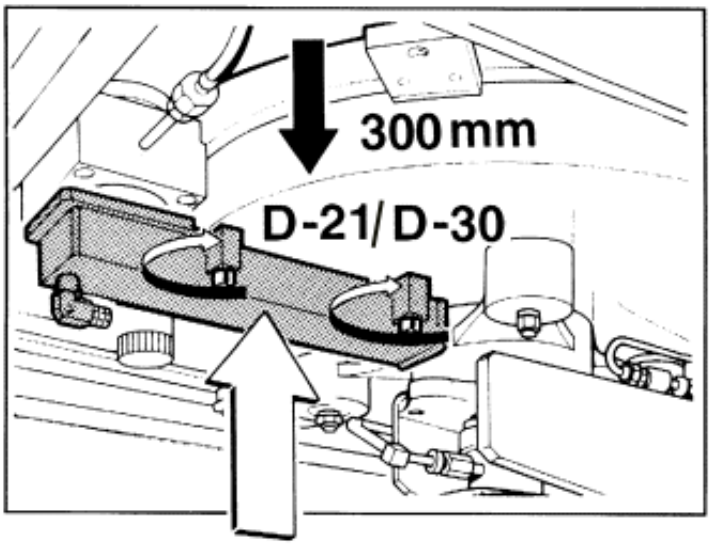

(d) Close the shutter plate centering the exhaust manifold hole on the exhaust valve inlet.

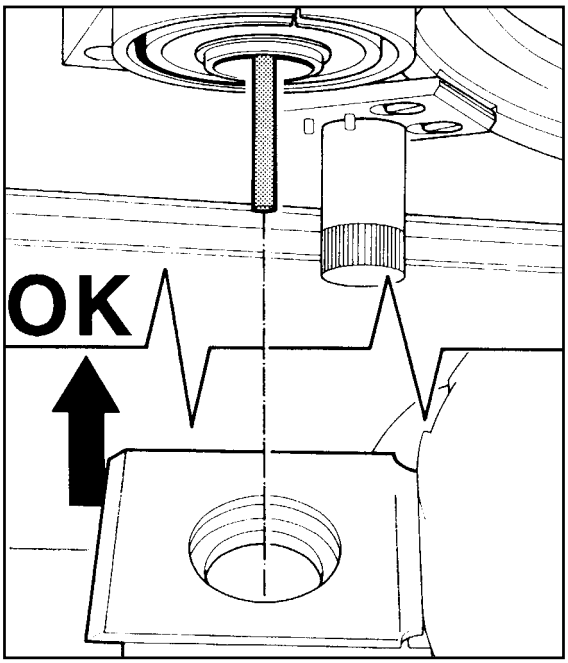

(e) Tighten the screws **(D-21)** from s/n 049 or **(D-30)** to s/n 048.

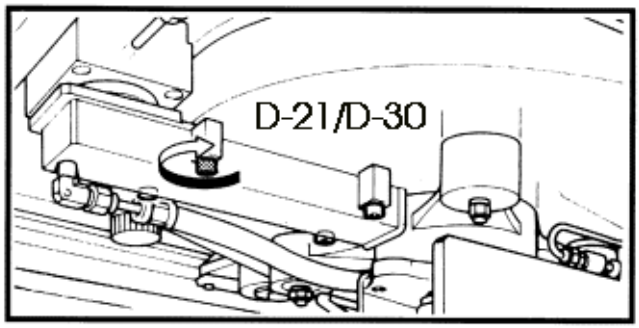

(f) Plug the water inlet pipe.

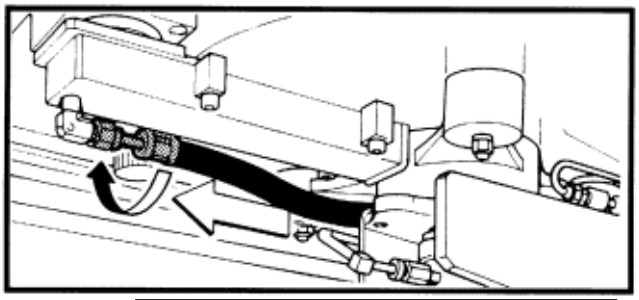

(g) Turn the water on.

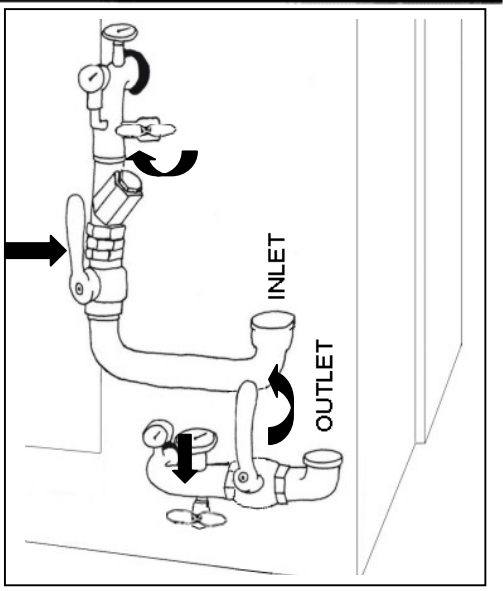

(D-3).8	**Exhaust manifold calibration**
	None

(D-3).9	**Suggestions**
	None

(D-19) PIN ROLLERS

Before proceeding to any cleaning or maintenance, return to the MAIN MENU and select the REACTOR MAINTENANCE command.
This command is available only if the safety requirements are met (see the Operator manual).

(D-19).1 Special equipment needed for this item :

None

(D-19).2 Special tools needed for this item :

None

(D-19).3 Controls :

The pin rollers must be replaced when they cannot easily be rotated by hand.

(D-19).4 Scheduled maintenance (PM) :

The pin rollers must be kept clean .

(D-19).5 Long term maintenance :

None

(D-19).6 Pin rollers removal

(a) Loose the grub screw **(D-18)**.

(b) Unscrew the pin roller

(D-19).7 Pin rollers reassemble

(a) Screw the pin roller

(b) Tighten the grub screw **(D-18)**.

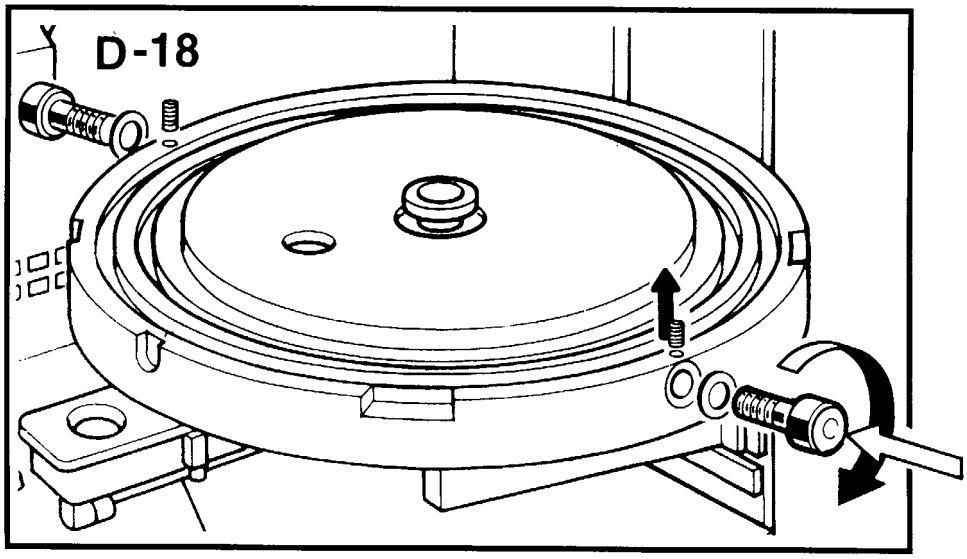

(D-19).8 Pin rollers calibration

None

(D-19).9 Suggestions

None

(F-0) LIFTING GROUP

CAUTION Before beginning the following maintenance operations, make sure that the quartz-guard is always backed, because in REACTOR MAINTENANCE, the safety photocell of the quartz-guard does not work and there can be interference with quartz-guard during shutter plate movement, with possible damages.

Before proceeding to any cleaning or maintenance, return to the MAIN MENU and select the REACTOR MANAGEMENT command.
This command is available only if the safety requirements are met (see the Operator manual).

(F-0).1 Special equipment needed for this item :

- Safety glass
- Safety gloves

(F-0).2 Special tools needed for this item :

None

(F-0).3 Controls :

Check the reduction gear **(F-46)**

(F-0).4 Scheduled maintenance (PM) :

CAUTION
Cleaning and lubrication of the rack is to be carried out only when the lift is not in motion.

Every 4 weeks:

Lift pole lubrication

(a) Open side lower doors.

(b) Lubricate the lift pole using a cloth soaked of silicone oil.

Lift pole cleaning

(a) Open side lower doors

(b) Clean the lift rack pole with petroleum.

(c) Grease the ball bearings with little spray silicone oil.

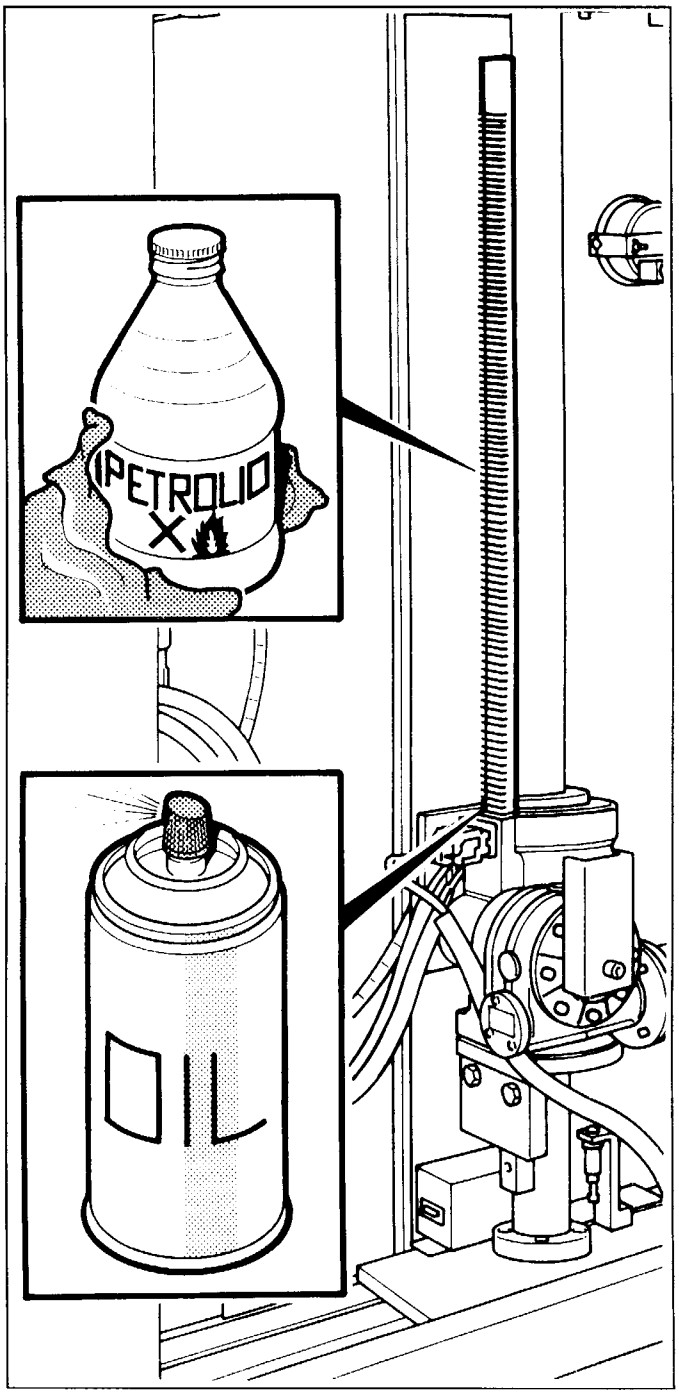

(F-0).5 Long term maintenance :

None

(F-0).6 Lifting group removal

None

(F-0).7 Lifting group reassemble

None

(F-0).8 Lifting group calibration

None

(F-0).9 Suggestions

Let the lift run and use a rag to remove excess silicone oil.

(F-46) REDUCTION GEAR

Before proceeding to any cleaning or maintenance, return to the MAIN MENU and select the REACTOR MAINTENANCE command.
This command is available only if the safety requirements are met (see the Operator manual).

(F-46).1 Special equipment needed for this item :

None

(F-46).2 Special tools needed for this item :

(a) Wrench size **10 and 17.**

(b) Hexagon L key size **5**.

(d) Spacer **250 mm** approx. long to sustain the lifting group when the reduction gear has been removed

(F-46).3 Controls :

(a) There must NOT be oil leak

(b) In case of leaks, replace the reduction gear.
After reassembly, top oil up again.

(F-46).4 Long term maintenance :

(a) Replace oil every 4 years with oil suitable for reduction gears, viscosity **SAE 120**, quantity **240 cc** approx.

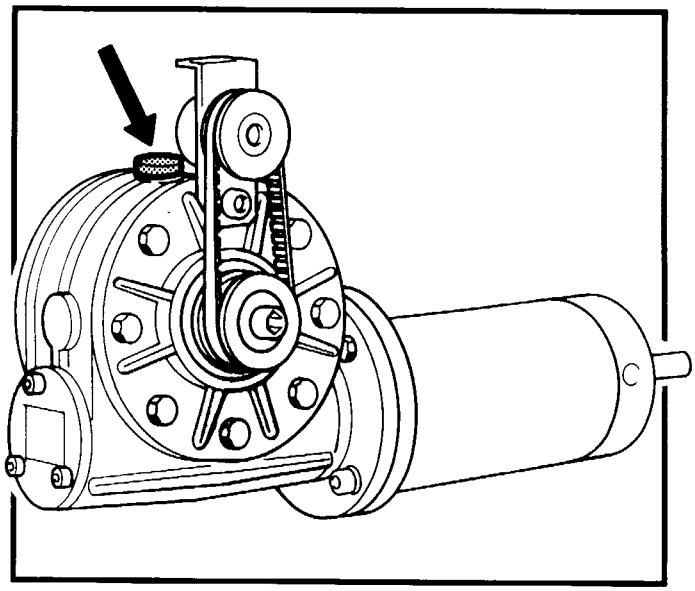

(F-46).5 Reduction gear removal

(a) Insert the metal spacer on the lower plate **(F-8)**.

(b) Lower the lift through the proper command until the flange **(F-11)** is close to the spacer, **THEN STOP THE LIFT.**

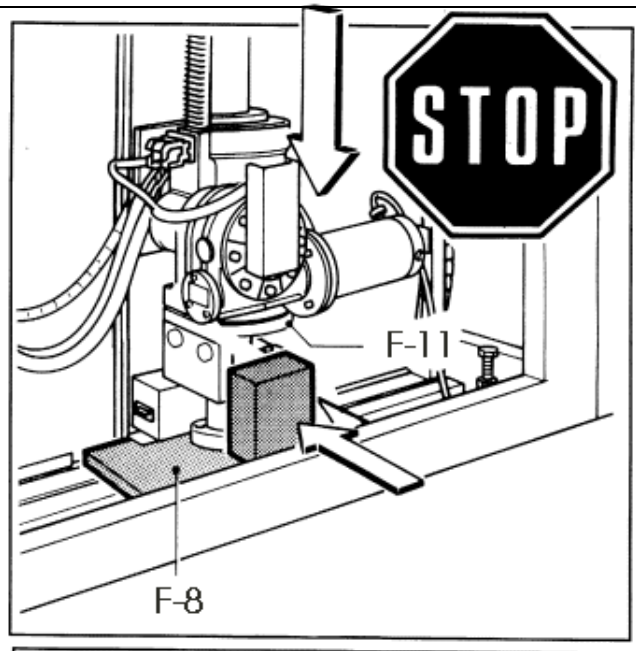

WARNING Make sure not to hit the spacer when lower the lift through the proper command, the parts could be damaged

(c) With pliers hold the protruding part of the lift motor shaft.

(d) Through the pliers make the shaft rotate in order to manually lower the lift until the lifting group is supported by the spacer.

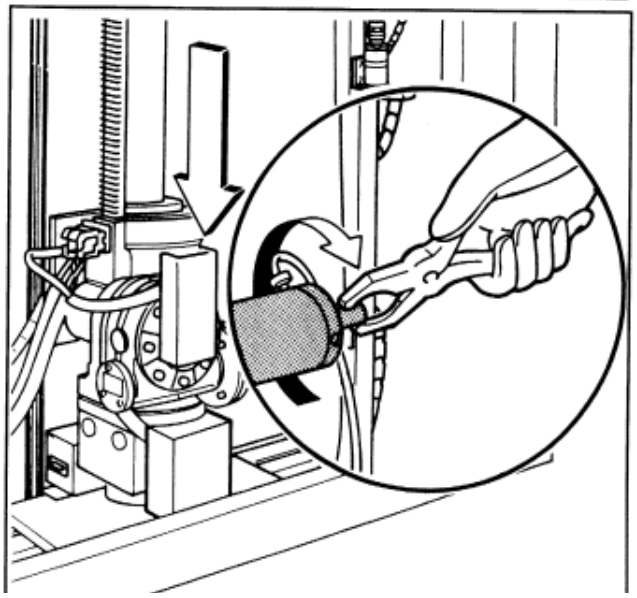

CAUTION Make sure the lift unit is well sustained by the spacer.
If the spacer does not properly sustain the lift unit, the lift unit will fall after removing the reduction gear with possibility of serious damage also for the operator.

(e) Disconnect the electrical wires of the motor (see scheme **(Z-1)**) and of the potentiometer **(F-57)**.

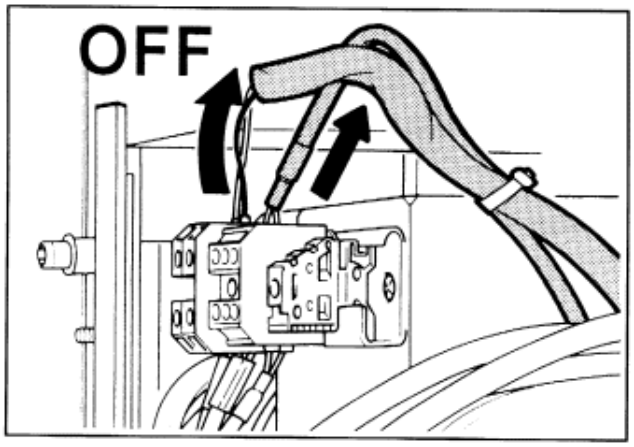

(f) Remove the pulley-protection and unscrew the screw **(F-6)**.

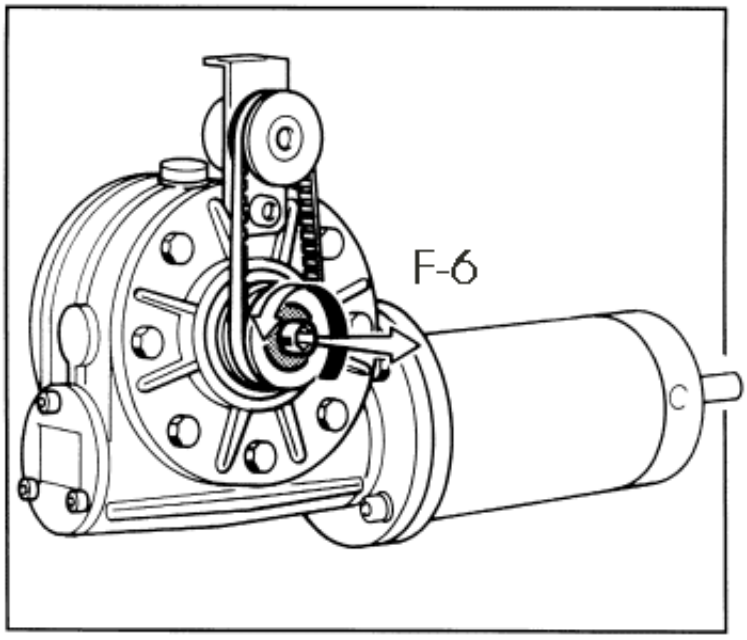

(g) Remove the pulley **(F-62)** and the belt **(F-60)**.

(h) Remove the support **(F-58)** together with the potentiometer by operating on the socket head screw **(F-59)**.

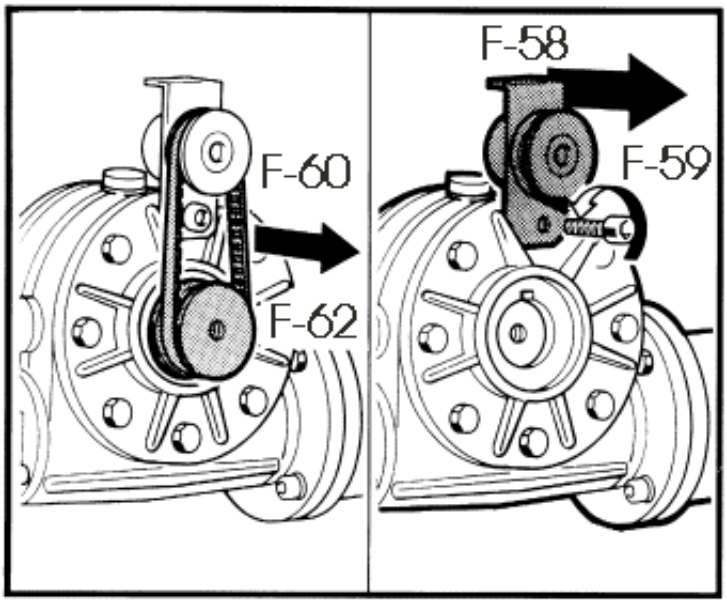

(i) Pull the whole reduction gear group out from the pinion **(F-19)**.

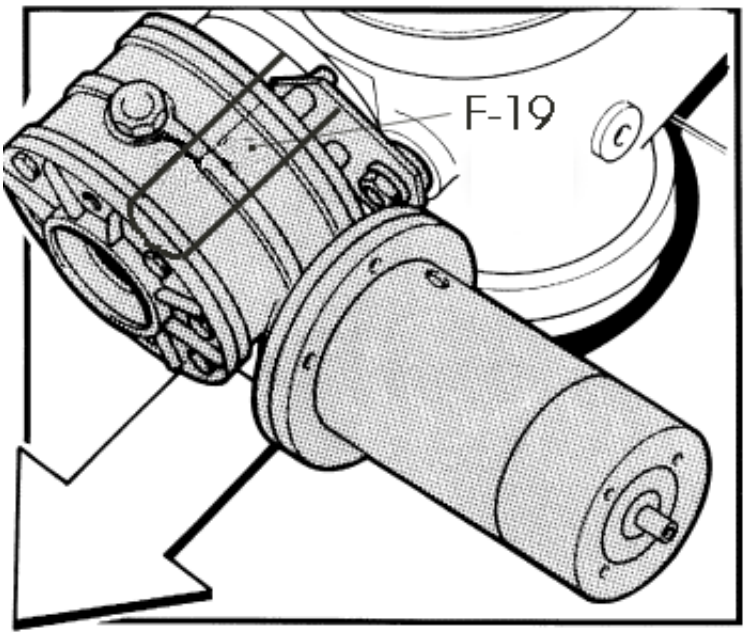

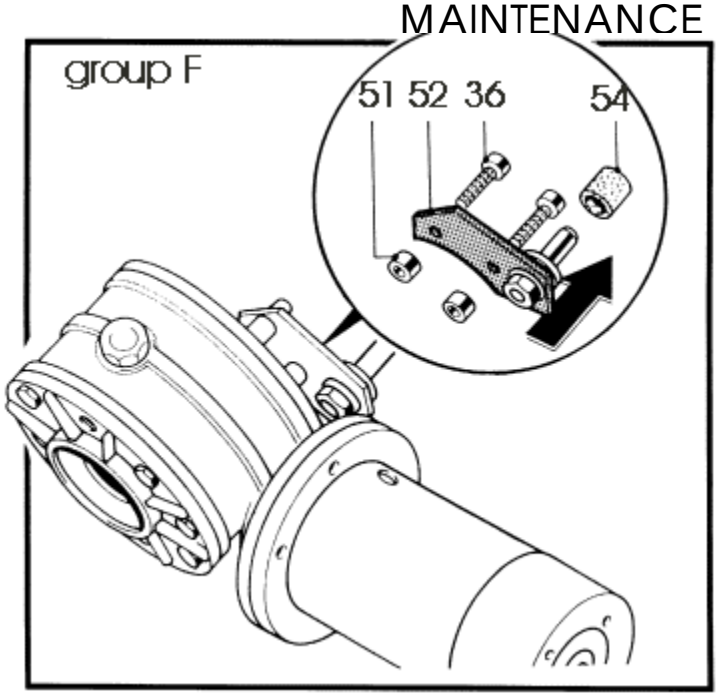

(j) On the workbench remove the plate for reduction gear **(F-52)**, keep with care the two tommy headscrews **(F-56)** (hexagon L key 5) and the two brass spacers **(F-51)**.

Recover the shock-absorber **(F-54)**.

(F-46).6 Reduction gear reassemble

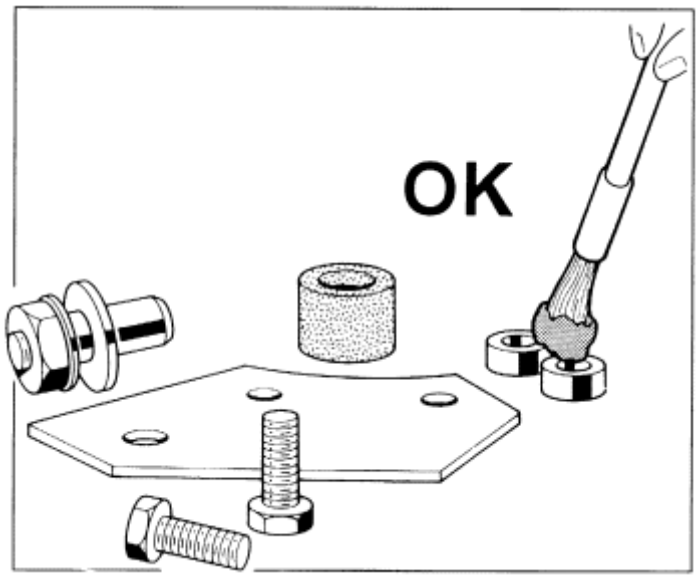

(a) Before reassembling the plate for reduction gear **(F-52)**, remove the properthree hexagon head cap screws (painted) on the new reduction gear in such a position to fit the plate **(F-52)**.

(b) To reassemble the plate for reduction gear **(F-52)** use the two tommy head screws (hexagon L key 5) and the two brass spacers previously used during removal.
Put a thin layer of Loctite (suitable for gaskets) on the area of contact
and tighten the two screws.

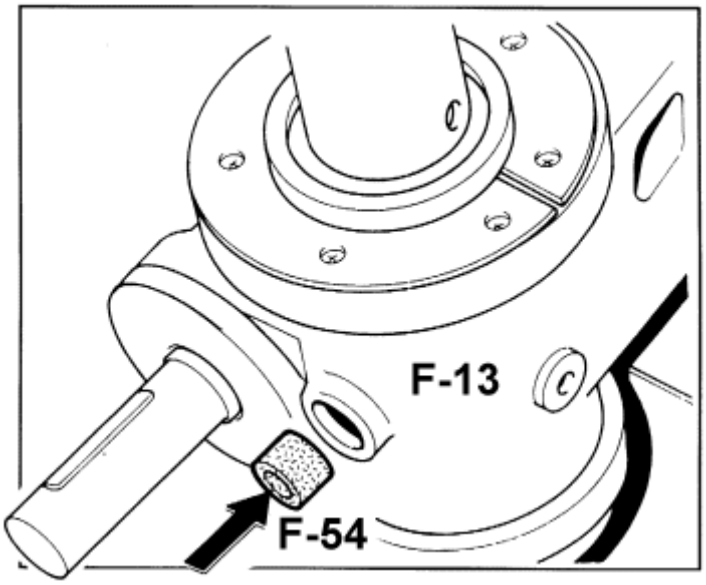

(c) Slip the shock-absorber **(F-54)** in the hole in the support **(F-13)**.

(d) With pliers hold the protruding part of the lift motor shaft .
Use pliers to rotate the motor shaft in order to keep the motor in the horizontal position and to align the seat on the reduction gear **(F-46)** with the tangent wedge on the pinion **(F-19)**.

(e) Slip the whole reduction gear assembly on the pinion **(F-19)** until the plug **(F-53)** is close to the hole in the support **(F-13)** (this hole already contains the shock - absorber **(F-54)**).

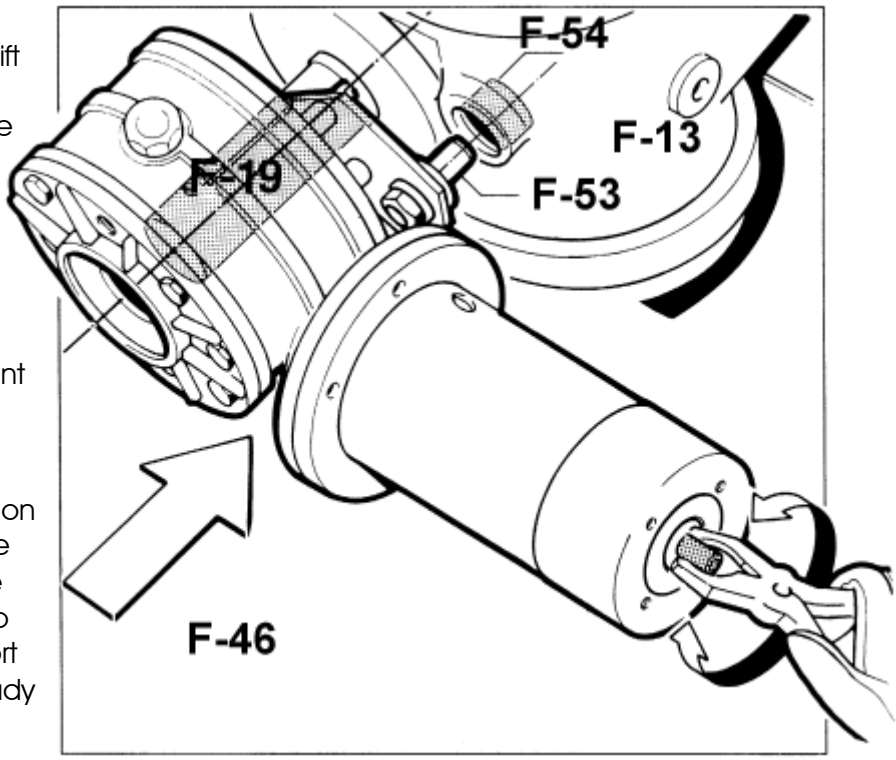

(f) Use pliers again to rotate the motor shaft in order to have the plug **(F-53)** fit the hole in the support **(F-13)**.

(g) Slip the whole reduction gear assembly completely in the hole in the support **(F-13)**.

(h) Put the pulley **(F-62)** on.

(i) Tighten the screw **(F-6)** with the washer.

(j) Use the Command LIFT UP and lift up the lift group till the closing position.

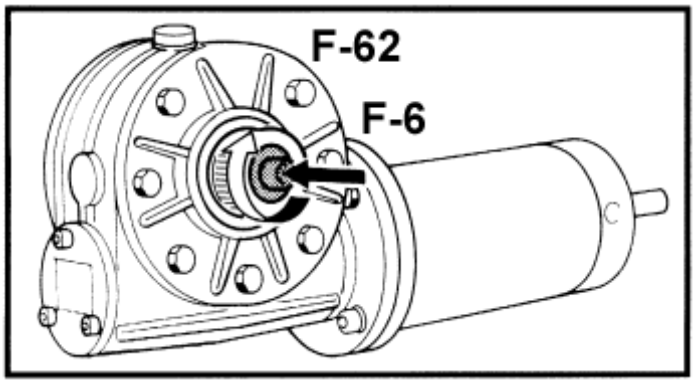

WARNING	The potentiometer must be replaced with the lift closed and the locker group in the closed position. It is mandatory to close the lift if it is open in order to be in the above said situation. Use the LIFT UP command to lift up. Please note that the potentiometer has not been mounted yet , therefore the reactor computer will stop the lift movement after few seconds with an alarm message. Just press the LIFT UP command how many times are necessary to reach the closing position (the locker group must also be in the closed position)

(k) Reassemble the plate potentiometer **(F-58)** and at the end the belt **(F-60)**.
See the description of this operation in the MAINTENANCE OPERATIONS **F-57 POTENTIOMETER**.

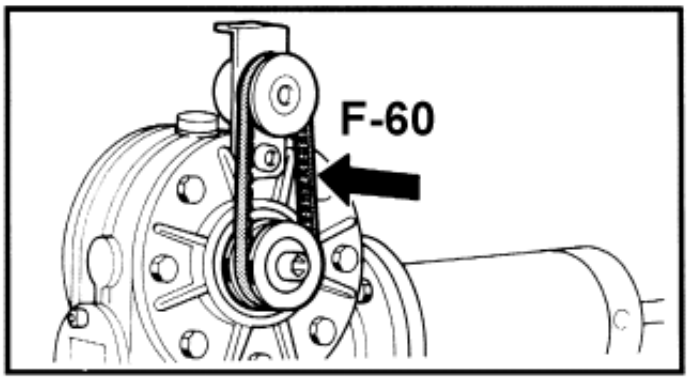

(l) Reset the motor (see "Schematic Wiring Machine" Manual and potentiometer electrical connections.

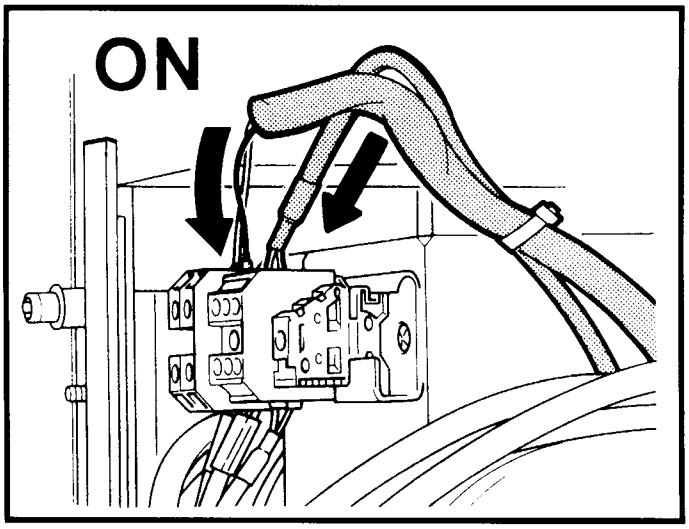

(F-46).7 Reduction gear calibration

See potentiometer calibration **(F-57)**.

(F-46).8 Suggestions

None

(F-50) LIFT MOTOR

CAUTION Before beginning the following maintenance operations, make sure that the quartz-guard is always backed, because in REACTOR MAINTENANCE, the safety photocell of the quartz-guard does not work and there can be interference with quartz-guard during shutter plate movement, with possible damages.

Before proceeding to any cleaning or maintenance, return to the MAIN MENU and select the REACTOR MANAGEMENT command.
This command is available only if the safety requirements are met (see the Operator manual).

(F-50).1 Special equipment needed for this item :

None

(F-50).2 Special tools needed for this item :

(a) Wrench size **10** and **17**.

(b) Hexagon **L** key size **5**.

(c) Spacer **250 mm** approx. long to sustain the lifting group when the reduction gear has been removed.

(F-50).3 Controls :

None

(F-50).4 Scheduled maintenance (PM) :

None

(F-50).5 Long term maintenance :

None

(F-50).6 Lift motor removal

(a) Disconnect the electrical wires (see "Schematic Wiring Machine" Manual).

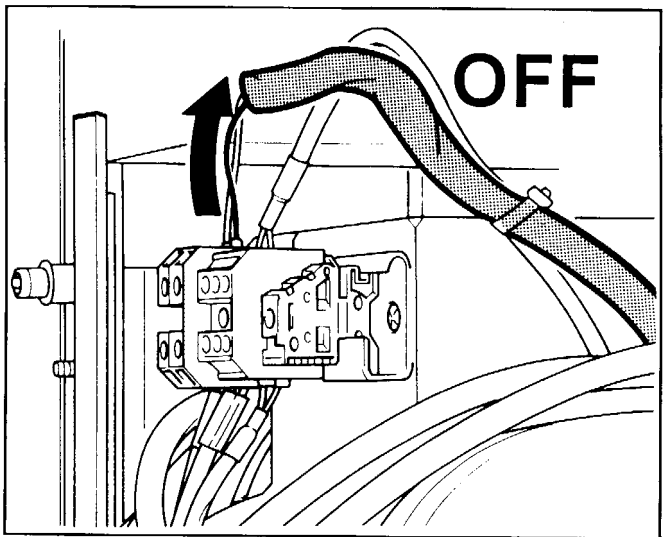

(b) Unscrew the two tommy head screws **(hexagon L key size 5).**

(c) Unscrew the two hexagon head cap screws **(wrench size 10).**

(d) Pull the motor out.

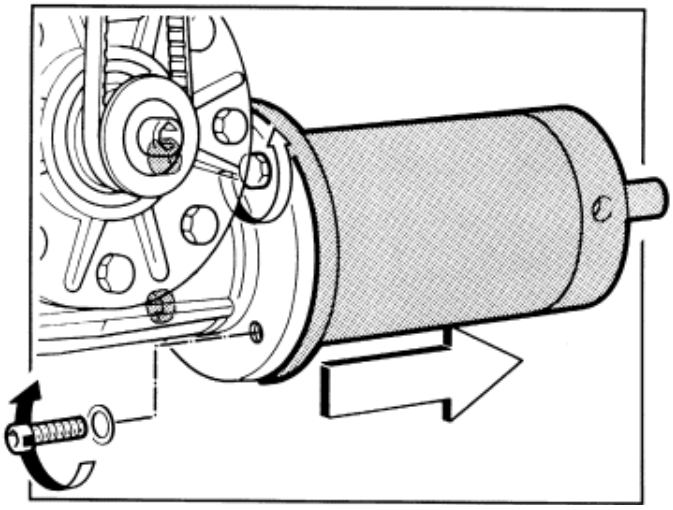

(e) Unscrew the four screws **(F-48)**.

(f) Remove the motor support **(F-49)**

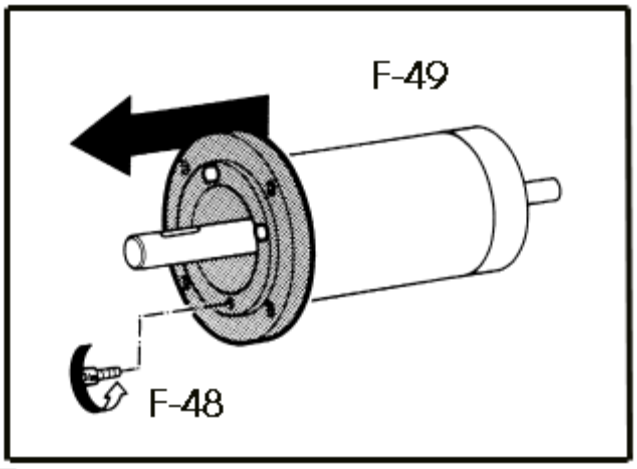

(F-50).7 Lift motor reassemble

(a) Insert the motor support **(F-49)**.

(b) Tighten the four screws **(F-48)**.

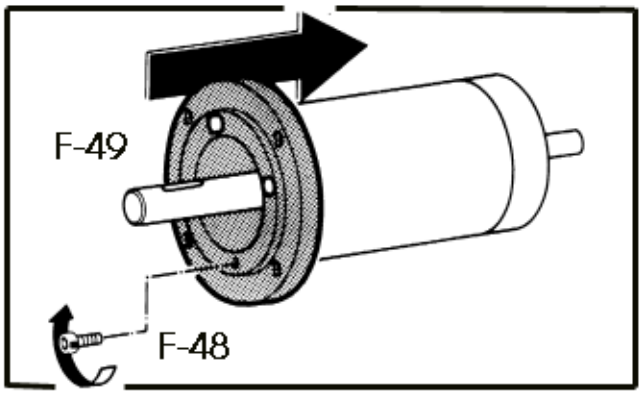

(c) Align the seat on the reduction gear with the tangent wedge on the shaft.

(d) Slip the motor in.

(e) Tighten the two hexagon head cap screws **(wrench size 10).**

(f) Tighten the two tommy head screws **(hexagon L key size 5).**

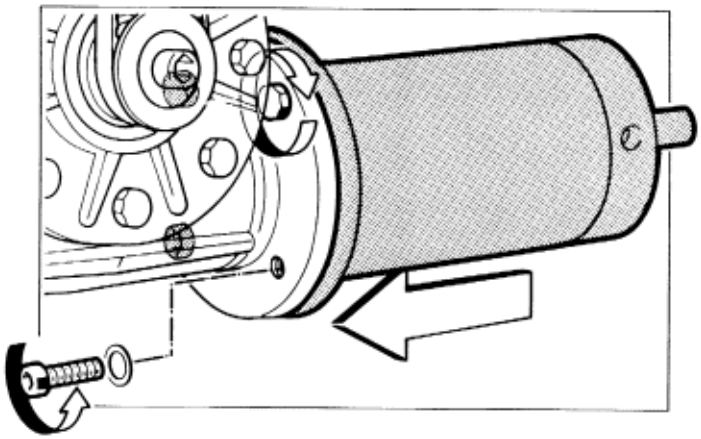

(h) Connect the electrical wires, **make sure that the polarity is correct** (see scheme **(Z-1)**)

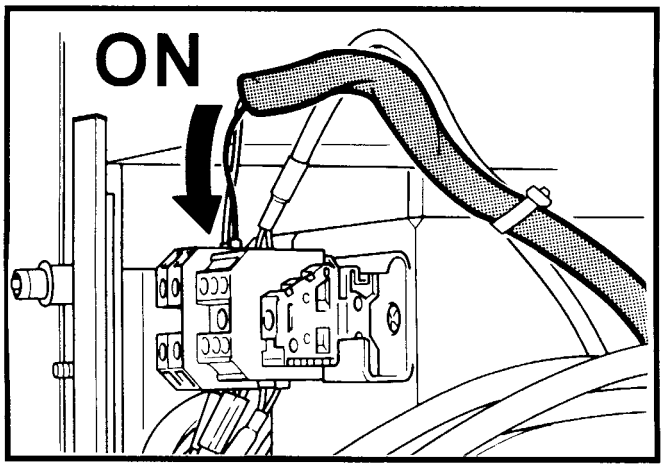

(F-50).8 Lift motor calibration

See potentiometer calibration **(F-57)**.

(F-50).9 Suggestions

None

(F-57) POTENTIOMETER

Before proceeding to any cleaning or maintenance, return to the MAIN MENU and select the REACTOR MAINTENANCE command.
This command is available only if the safety requirements are met (see the Operator manual).

(F-57).1 Special equipment needed for this item :

None

(F-57).2 Special tools needed for this item :

Hexagon L key set

(F-57).3 Controls :

None

(F-57).4 Scheduled maintenance (PM) :

None

(F-57).5 Long term maintenance :

None

(F-57).6 Potentiometer removal

WARNING The potentiometer must be replaced with the lift closed and the locker group in the closed position. It is mandatory to close the lift if it is open in order to be in the above said situation.
Use the LIFT UP command to lift up.
If the potentiometer has not been mounted yet the reactor computer will stop the lift movement after few seconds with an alarm message.
Just press the LIFT UP command how many times are necessary to reach the closing position (the locker group must also be in the closed position).

(a) Disconnect the electrical wires of the potentiometer (see scheme **(Z1)**)

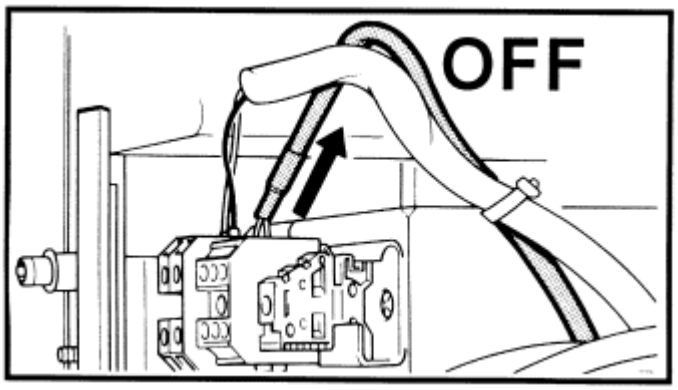

(b) Unscrew the screw **(F-6)**.

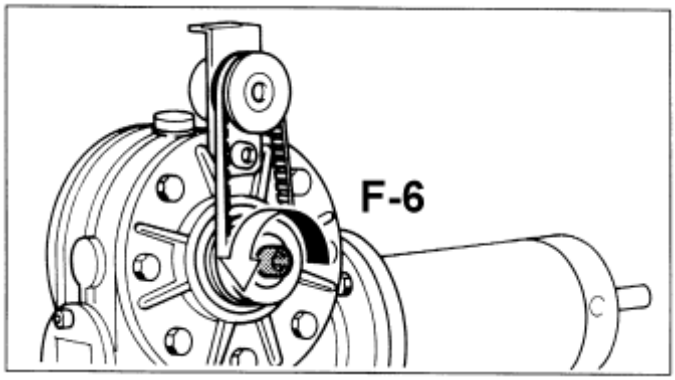

(c) Remove the pulley **(F-62)** and the belt **(F-60)**.

(d) Unscrew the dowel **(F-33)** and remove the pulley **(F-63)**.

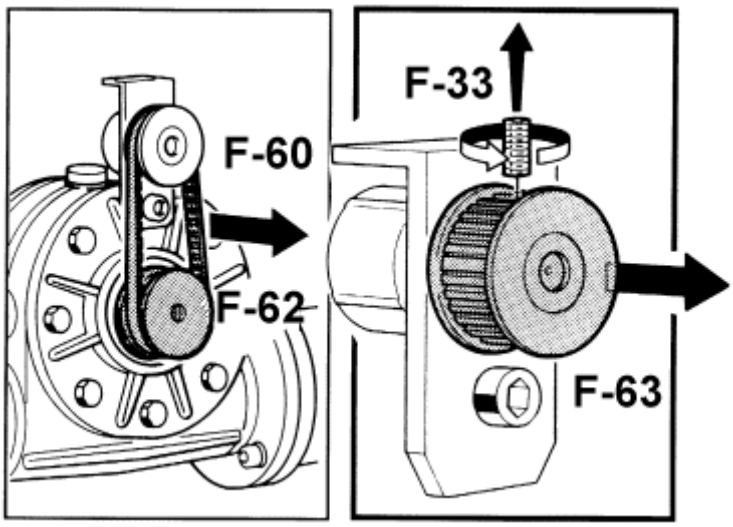

(e) Unscrew the potentiometer nut **(F-57)** and remove it.

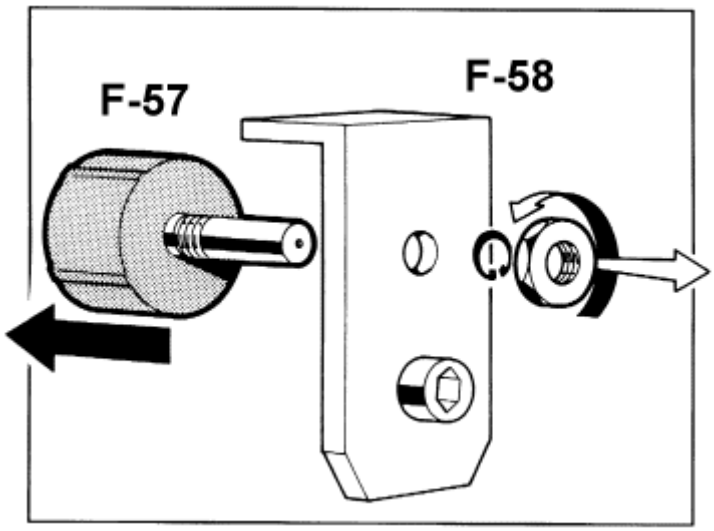

(F-57).7 Potentiometer reassemble

WARNING The potentiometer must be replaced with the lift closed and the locker group in the closed position.
It is mandatory to close the lift if it is open in order to be in the above said situation.
Before mounting the potentiometer close the lift with the LIFT UP command .
If the lift is open and the potentiometer has not been mounted yet the reactor computer will stop the lift movement after few seconds with an alarm message.
Just press the LIFT UP command how many times are necessary to reach the closing position (the locker group must also be in the closed position)

(a) Mount the potentiometer on its support **(F-58)**.

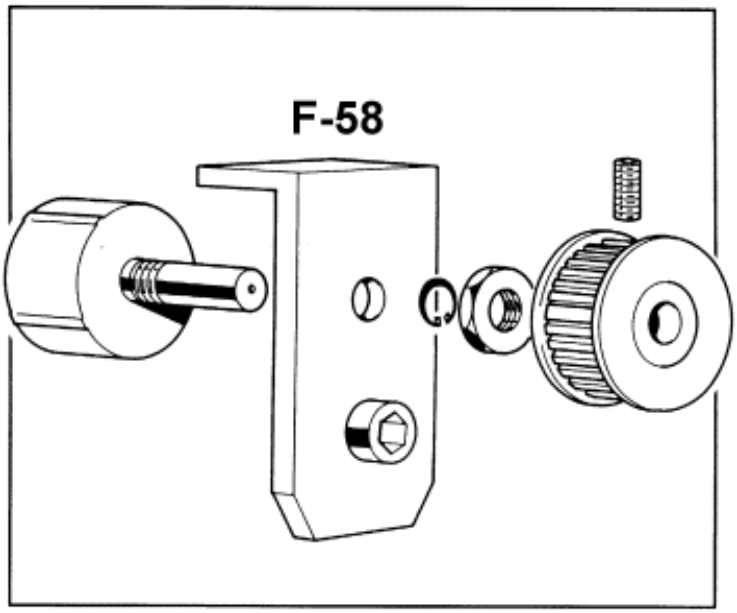

(b) Put the pulley **(F-63)** on and screw the grub screw **(F-33)**.

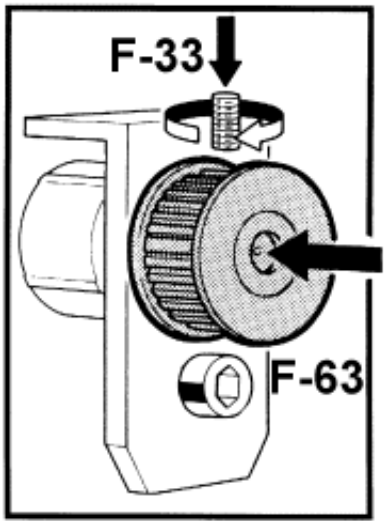

(c) Put the belt **(F-60)** on.

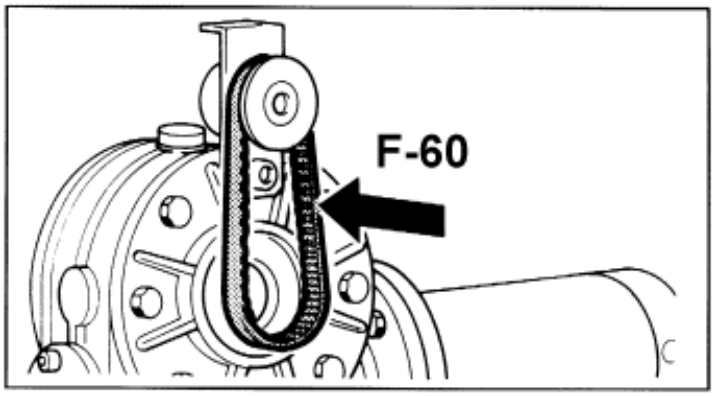

(d) Put the pulley **(F-62)** on and screw the screw **(F-6)**.

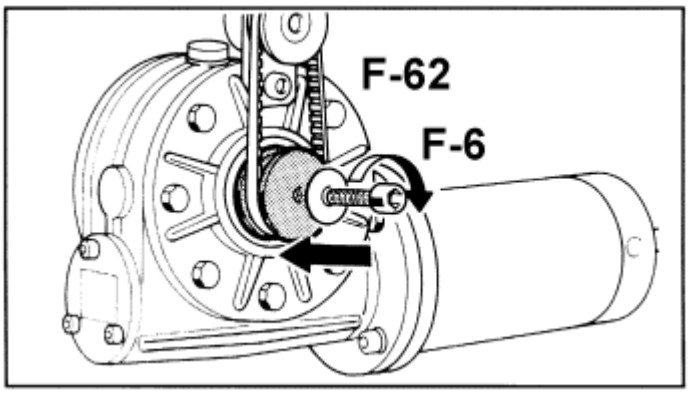

(F-57).8 Potentiometer calibration

(a) Loose the screw bolt **(F-16)**.

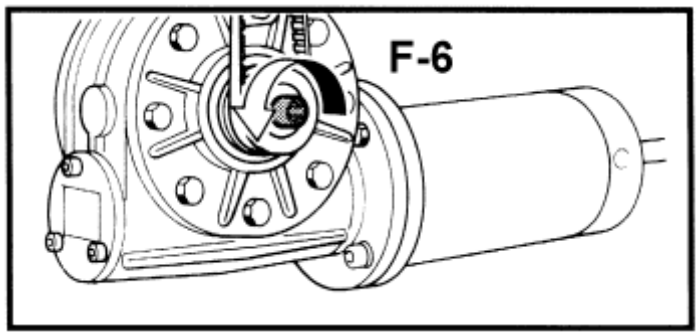

(b) Use a screwdriver to turn the potentiometer clockwise until the limit position

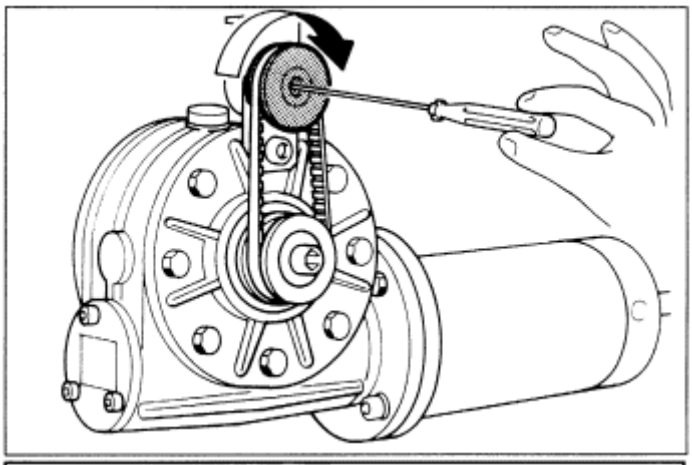

(c) Turn it counterclockwise for about **60 deg.**

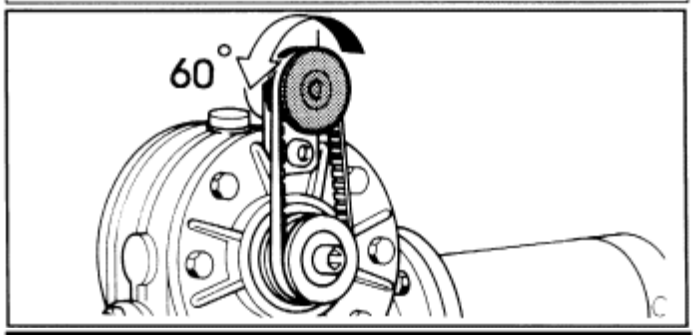

(d) Lock the bolt screw **(F-6)**.

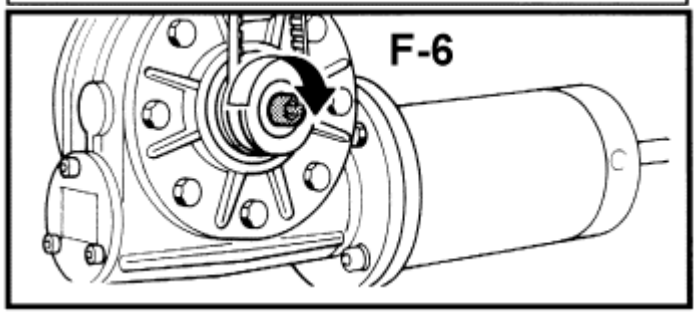

(e) For electrical reference see scheme **(Y-4)**.

(f) For quick reference check on the page "Analog input/out", inside the Diagnostic Pgm. The correct calibration value.

(F-57).9 Suggestions

None

(G-1) (G-2) COMPRESSED AIR FILTER / PRESSURE REGULATOR

Rated pressure: **6 bar**

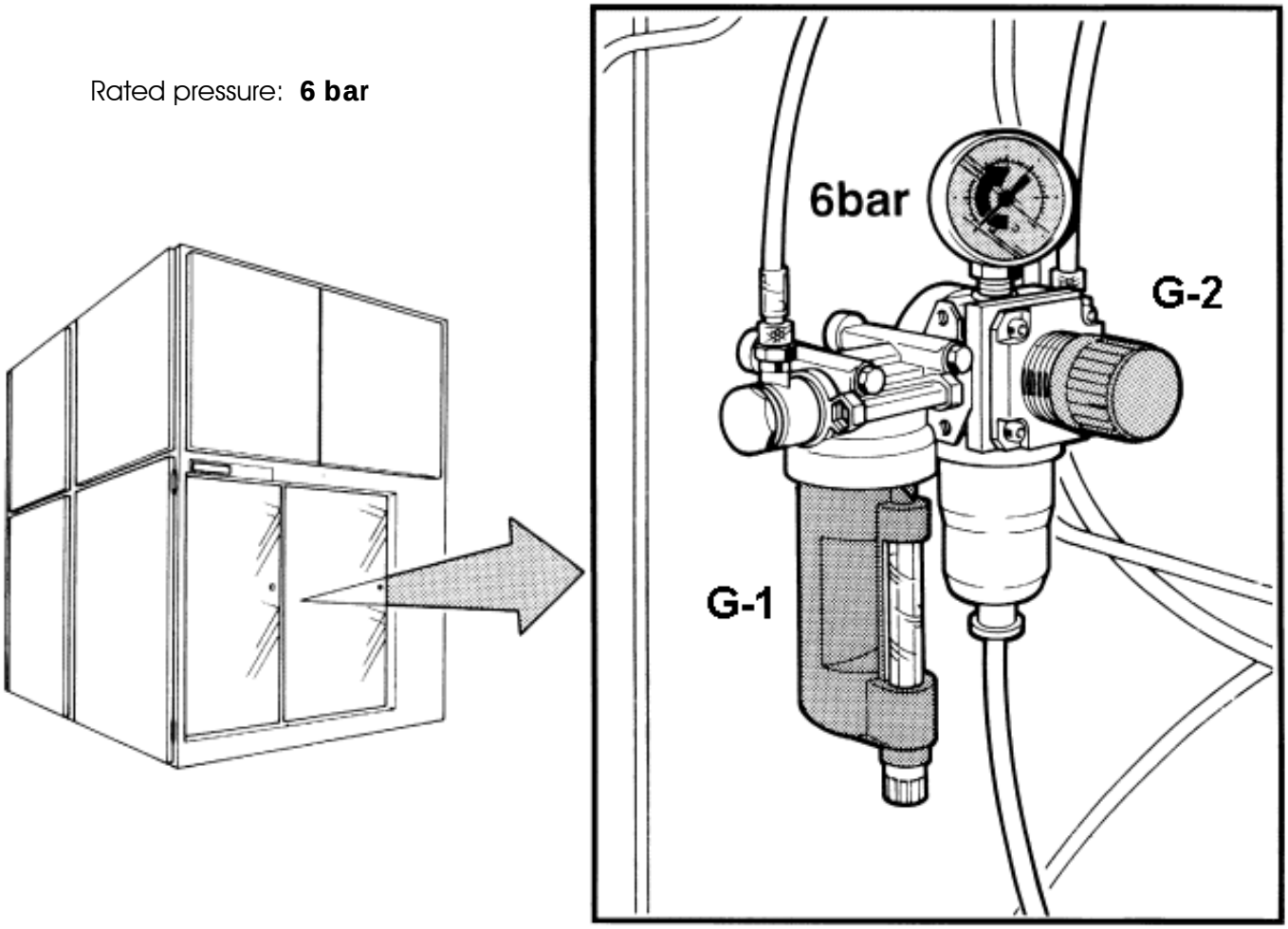

(G-4) COMPRESSED AIR PRESSURE SWITCH

(G-4).1 Electric connections: see “Schematic Wiring Machine Manual” comp. SQ384H

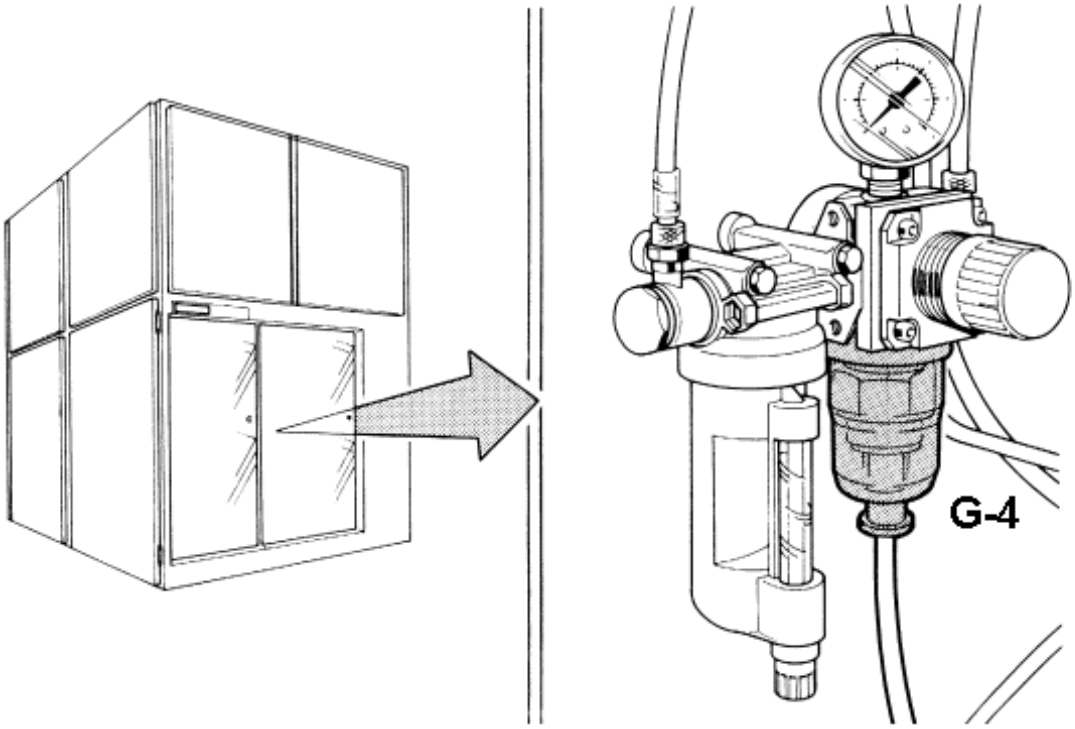

(G-4).2 Procedure C8 (Pressure sw compressed air)

a. Open the compressed air on/off valve.

b. Turn the knob and set pressure at **5 bar**.

c. Remove the rubber cap and turn the pressure switch screw so that the alarm (**RED LED**) is triggered on the **ALARMS** page.

d. Reset pressure value to **6 bar** and make sure that the LED switches to **GREEN**.

e. If the **LED** does not switch on, consult the **“ PRESSURE SWITCH COMPRESSED AIR ”** point in the **TROUBLESHOOTING** chapter.

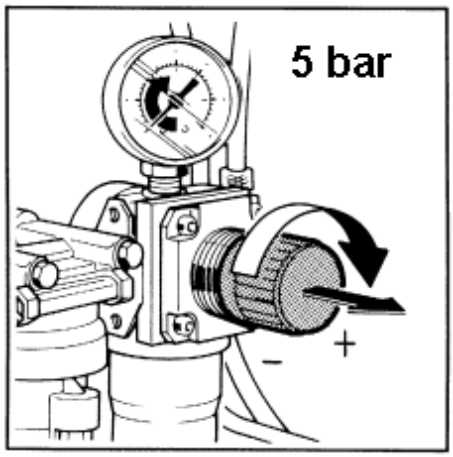

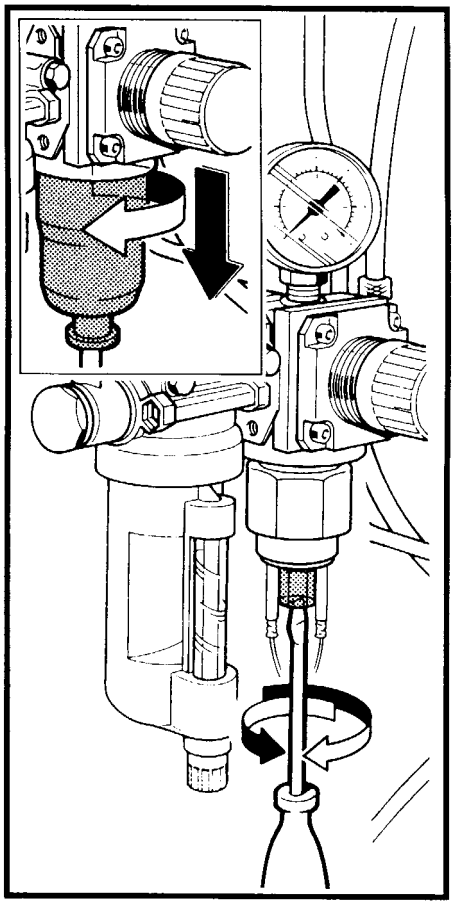

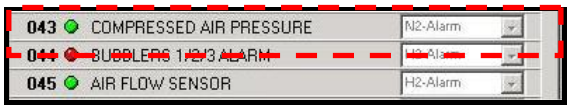

(G-5) AIR CONVEYOR VALVE

(G-5).1 Pneumatic connections: see groups (G) and (Q)

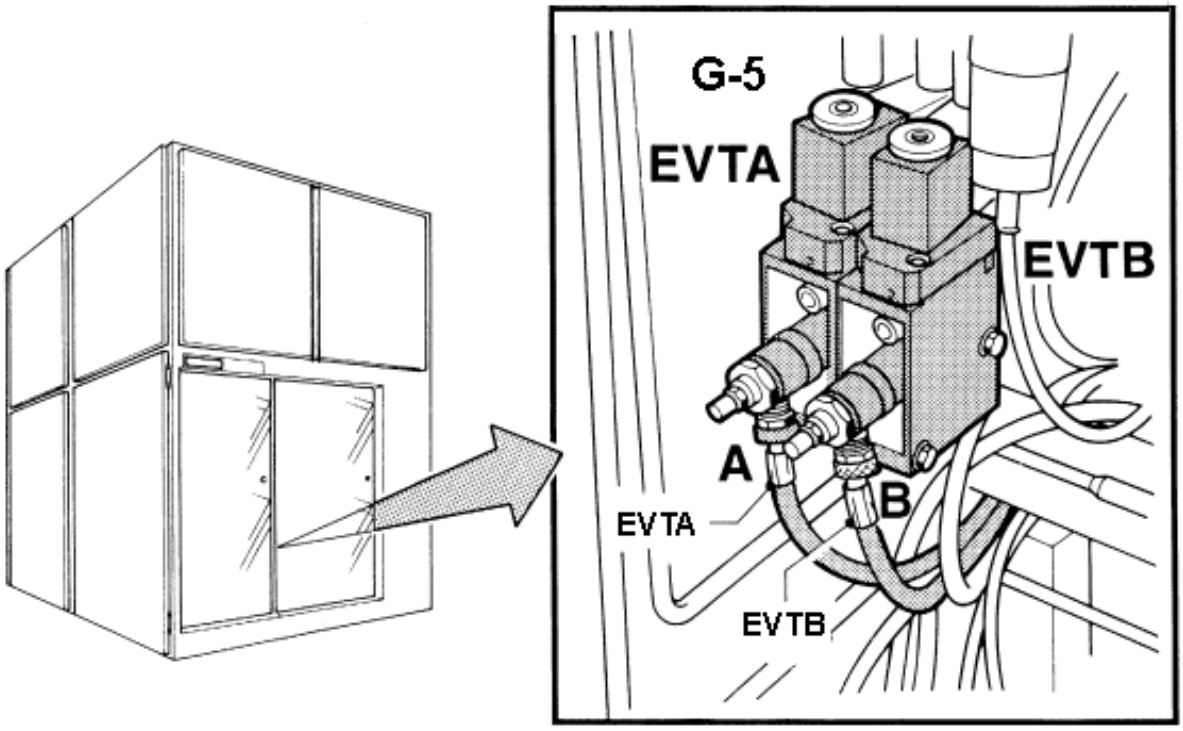

Note	Remember that the tube marked with **EVTA** connects the solenoid valve **EVTA** to connector **A** of the **SPOILER**. The tube marked with **EVTB** connects the solenoid valve **EVTB** with connector **B** of the **SPOILER**.

The regulators placed on the solenoid valve outlets control the **SPOILER** motion speed.

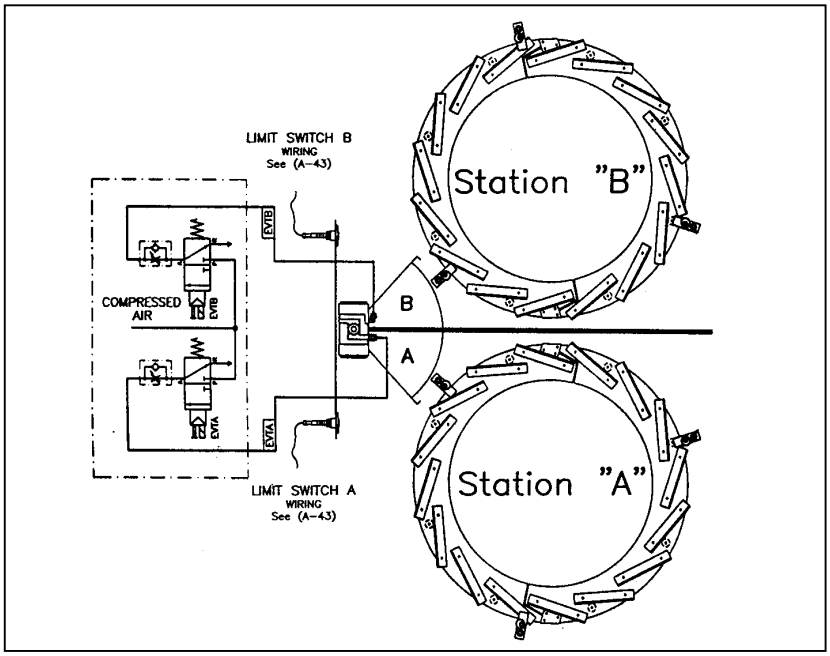

(G-9) BALL FLOWMETER FOR ELECTRONIC CABINET N2 PURGE

(G-9).1 Set Point : 10 slm

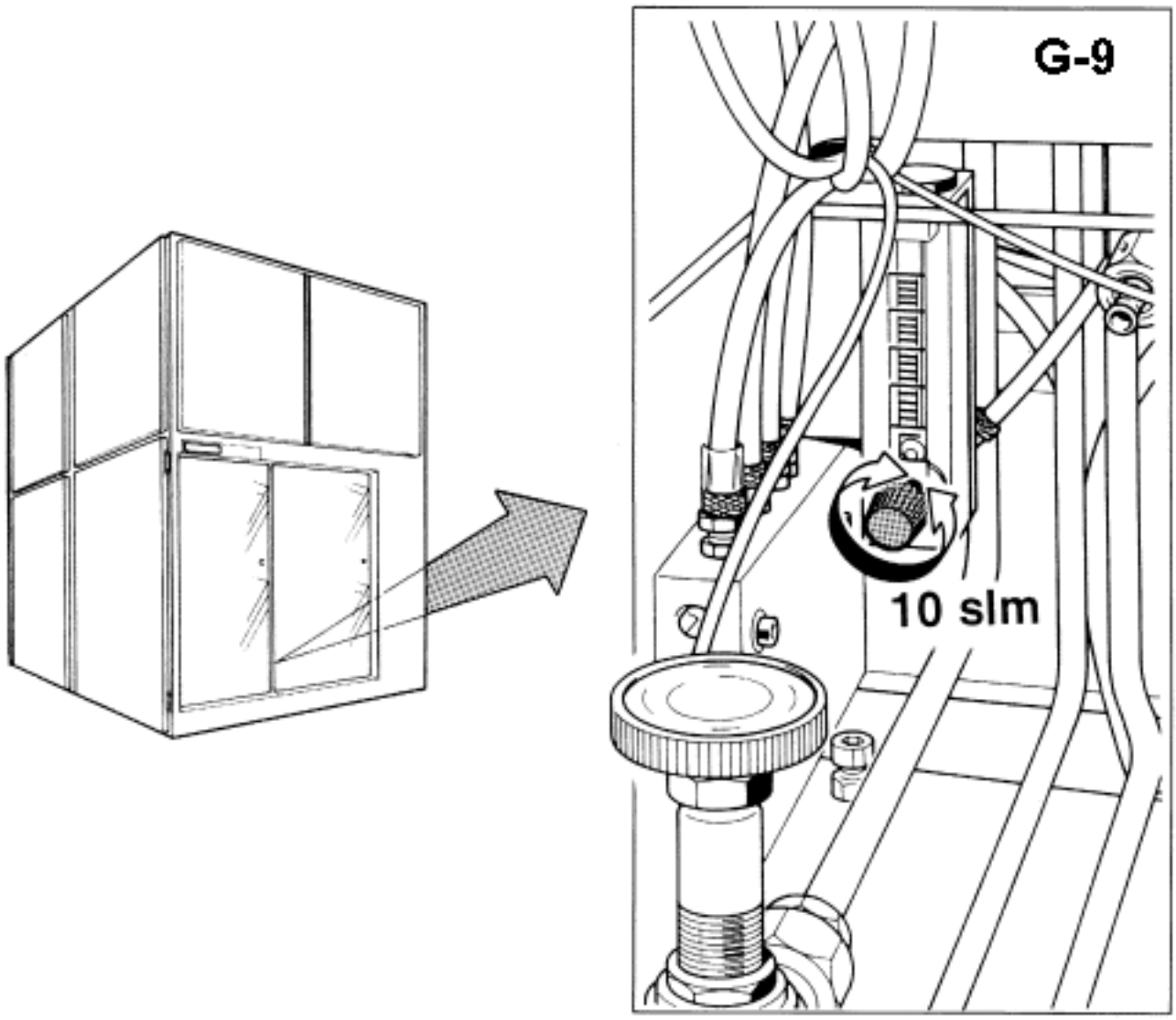

(H-0) TURN PLATE GROUP

CAUTION Before beginning the following maintenance operations, make sure that the quartz-guard is always backed, because in REACTOR MAINTENANCE, the safety photocell of the quartz-guard does not work and there can be interference with quartz-guard during shutter plate movement, with possible damages.

Before proceeding to any cleaning or maintenance, return to the MAIN MENU and select the REACTOR MANAGEMENT command.
This command is available only if the safety requirements are met (see the Operator manual).

(H-0).1 Special equipment needed for this item :

None

(H-0).2 Special tools needed for this item :

Set of spanner , wrench, centesimal comparator

(H-0).3 Controls :

At every susceptor change remove scale from the shaft head and from the quartz plate **(H-2)**.

After maintenance always perform H2 leak test. Before performing the test all the connection have been tighten.
- Then proceed with the leak test:

From the **GAS PANEL** page, open the hydrogen supply using the **H2A PURGE** command and setting at **200 liters**. Make sure that **200 lt** effectively pass through the **PURGE flowmeter** - this is visible at the **GAS PANEL** on the reading column-.
Using the **LEAK detector**, check for any at the following points:

a. Rotation plate **VCR** union.
b. Between pulley and rotation body.
c. Hydrogen purge flexible tube

When you have finished the test, shut the **H2A PURGE** valve via valve **N2A.**

(H-0).4 Scheduled maintenance (PM) :

Every 2 weeks :

Cleaning

(a) Remove susceptor and quartzware (see **Group V**).

(b) Remove the turn plate group protection carter **(A-51)**.

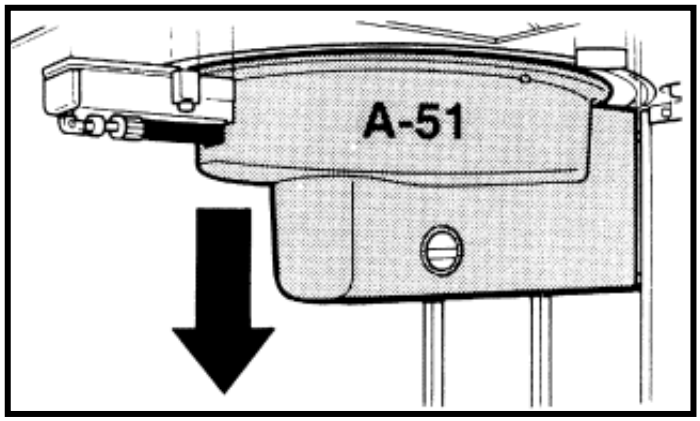

(c) Unscrew the nut **(H-25)** that holds the pulley **(H-6)** (polygonal wrench #13).

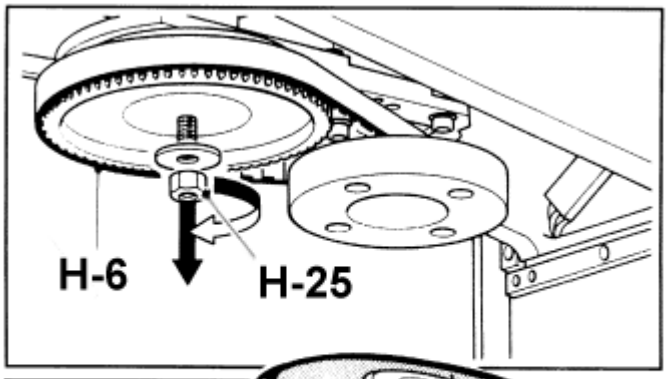

(d) Slip the rotating part off the top.

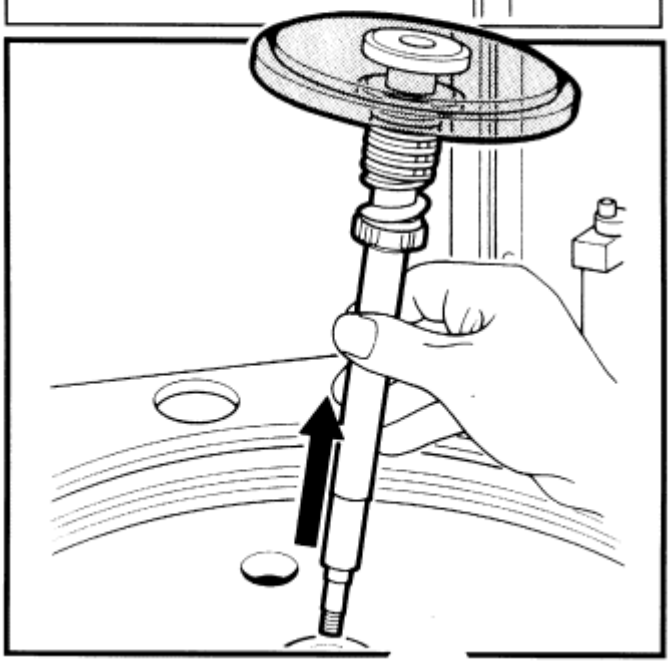

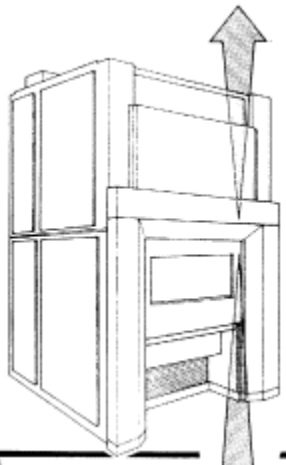

(e) Hold the pulley **(H-6)** and the belt **(H-35)** during the preceding operations. Therefore remove the pulley and the belt.

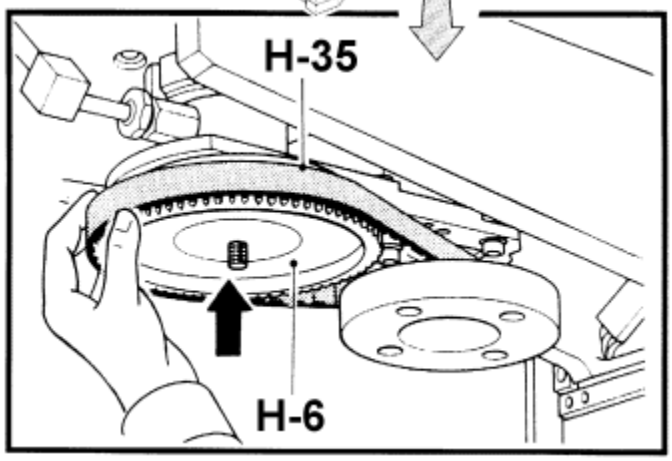

(f) Clean the internal part of the shaft and remove the scale especially from the gaskets **(H-17)** and **(H-21)** and from the teflon bush **(H-16)**.

(g) Blow with nitrogen the inside of the steady part.

(h) Reassemble (see rotating part reassemble where applicable).

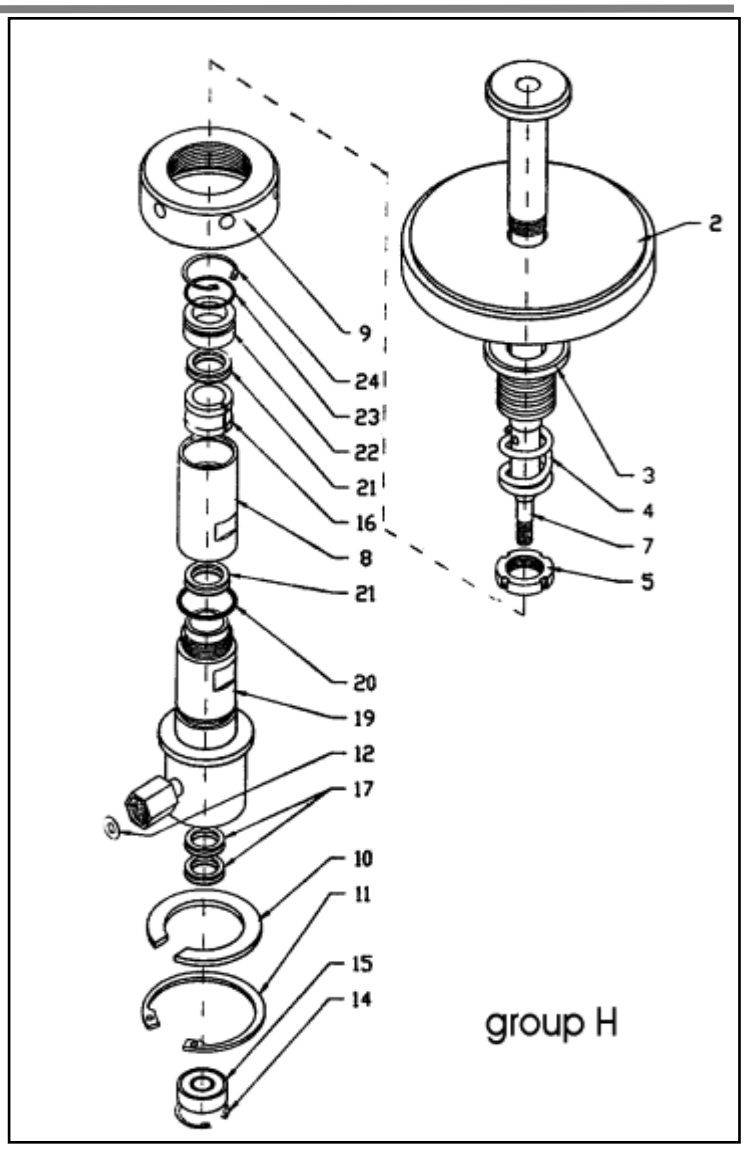

Every 8 weeks :

Replace at least the following items :

- Pusher **(H-3)**
- Spring **(H-4)**
- Threaded ring **(H-5)**
- Pulley **(H-6)**
- Shaft **(H-7)**
- Seeger **(H-14)** and **(H-24)**
- Bearing **(H-15)**
- Teflon bush **(H-16)**
- Gaskets **(H-12) (H-17) (H-20) (H-21)** and **(H-23)**

(see rotating part and inside removal / reassemble)

In addition to the usual 8 weeks maintenance replace the following parts:

Every 12 weeks :

Replace the Hydrogen Purge Flexible Tube **(H-30)** and the gaskets **(H-12)** at the both ends

Every 24 weeks :

Replace Pulley **(H-6)**

Every 48 weeks :

Replace the Belt **(H-35)**

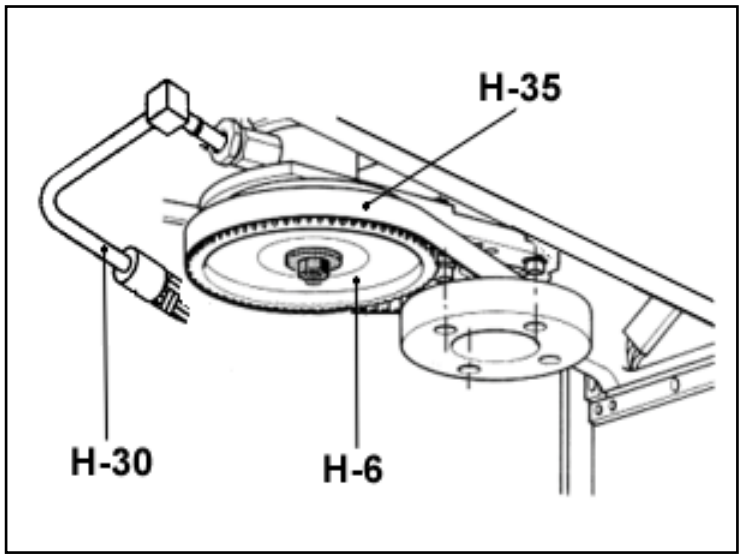

(H-0).5 Hints

(H-0).5-1 Rotating part removal

(a) Remove susceptor and quartzware (see **V Group**).

(b) Remove the turn plate group protection carter **(A-51)**.

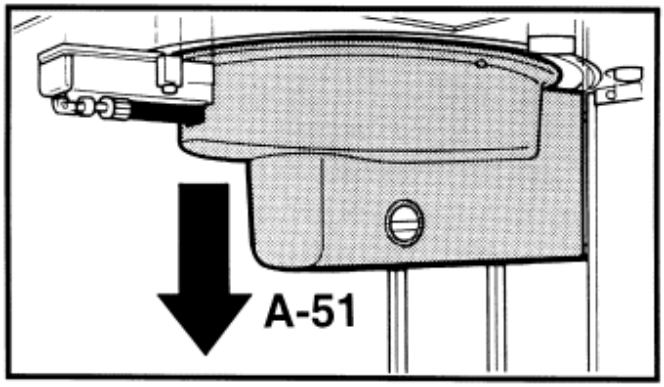

(c) Unscrew the nut that holds the pulley **(H-6)** (polygonal wrench #13).

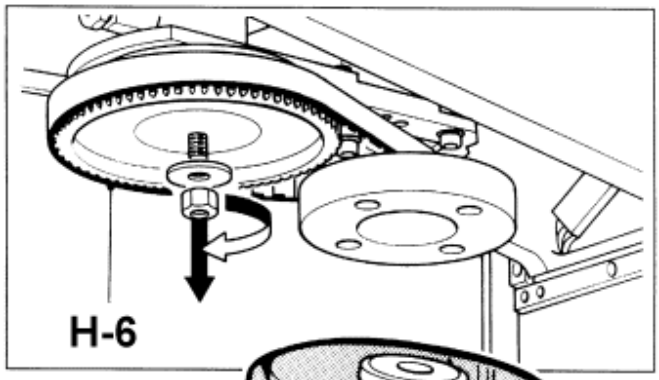

(d) Slip the rotating part off the top.

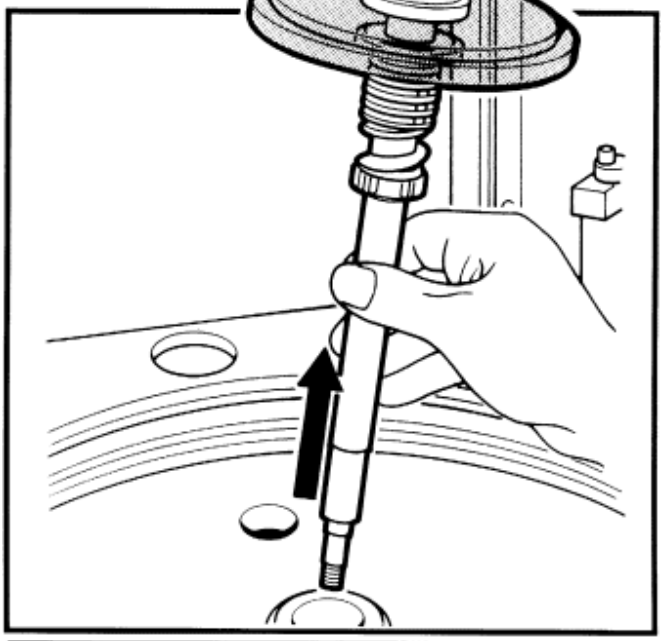

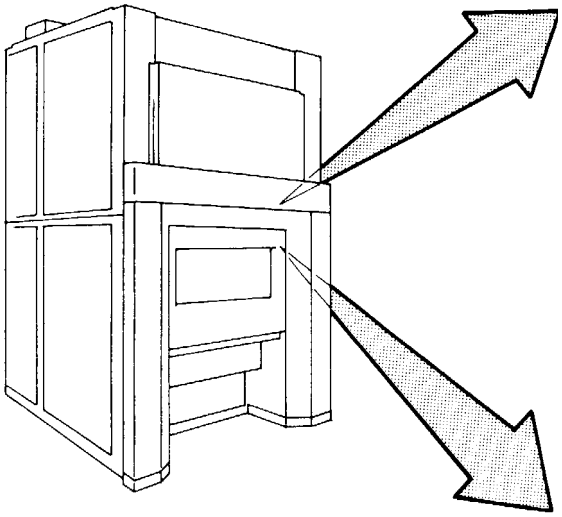

(e) Hold the pulley **(H-6)** and the belt **(H-33)** during the preceding operations. Therefore remove the pulley and the belt.

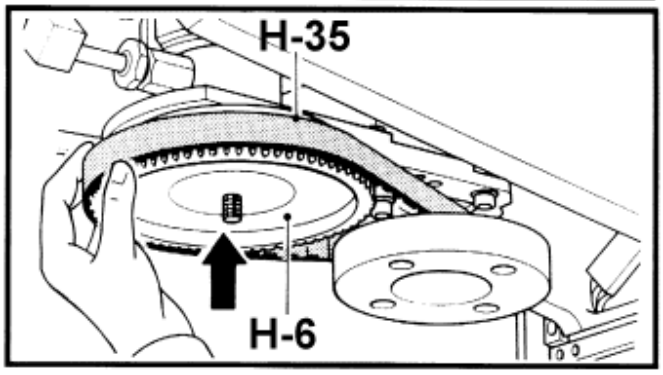

(f) Clamp the shaft with a vice in the clamping area, in horizontal position.

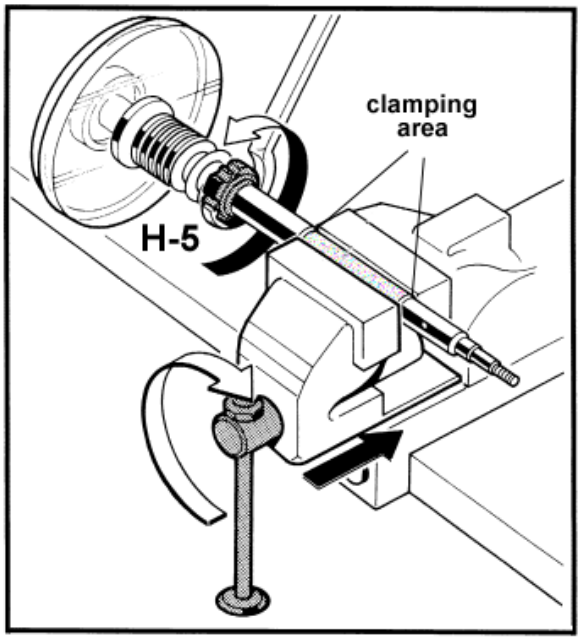

> ⚠ **CAUTION**
> Interpose a soft metal plate between the shaft and the vice's jaw (ex. Aluminum) no to damage the shaft

(g) Unscrew the threaded ring **(H-5)** with a pin wrench (size 25-32).

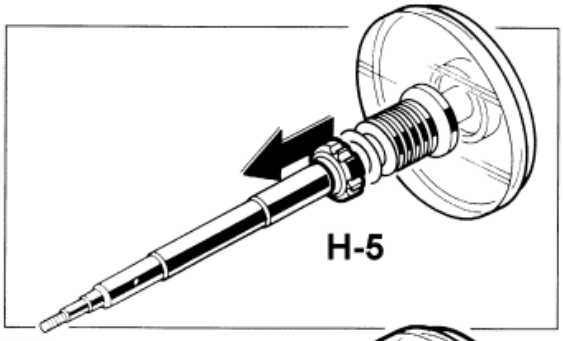

(h) Take the shaft off the vice and remove the threaded ring **(H-5)**

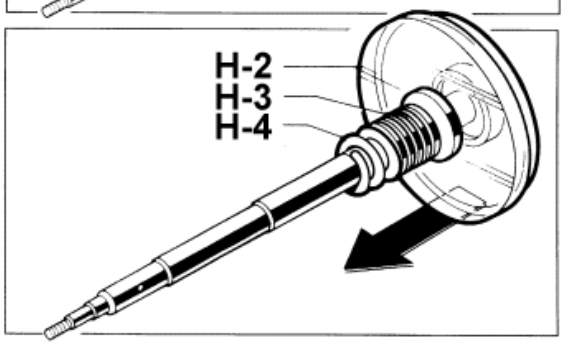

(i) Remove the spring **(H-4)**.

(j) Remove the pusher **(H-3)**.

(k) Remove the quartz plate **(H-2)**.

(H-0).5-2 Steady part removal

(a) Remove the shaft **(H-7)** and the pulley **(H-6)** (as the Rotating part removal chapter)

(b) Disconnect the connector of the motor **(H-33)**

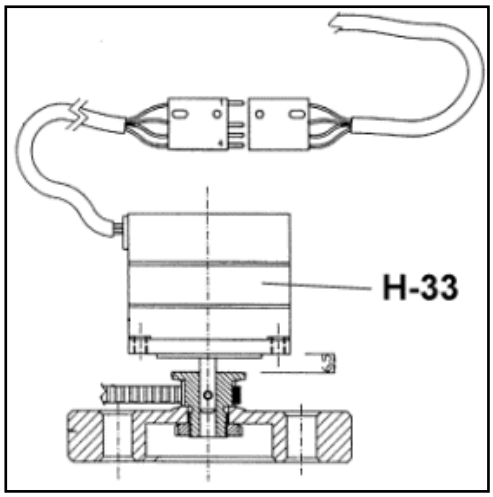

(c) Disconnect the flexible tube VCR connection

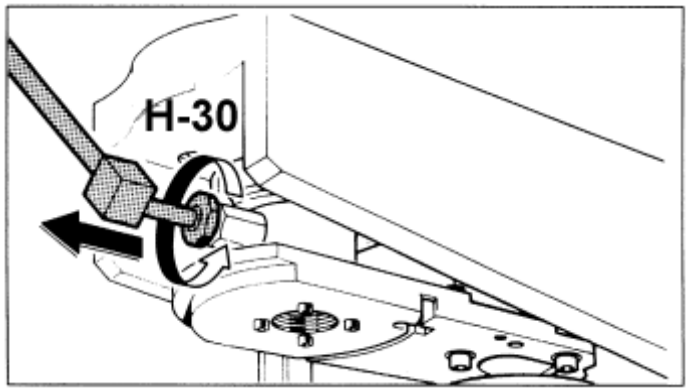

Note: remember to change the Hydrogen Purge Flexible Tube **(H-30)** every 12 weeks

(d) Unscrew the threaded ring **(H-9).** Insert a steel rod dia. 8 mm into the hole and turn counterclockwise

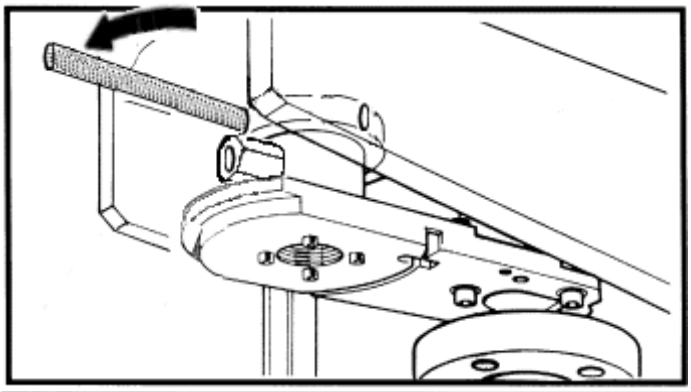

CAUTION
Check that the tool is inserted to end run

(e) Slip the whole group off from the bottom

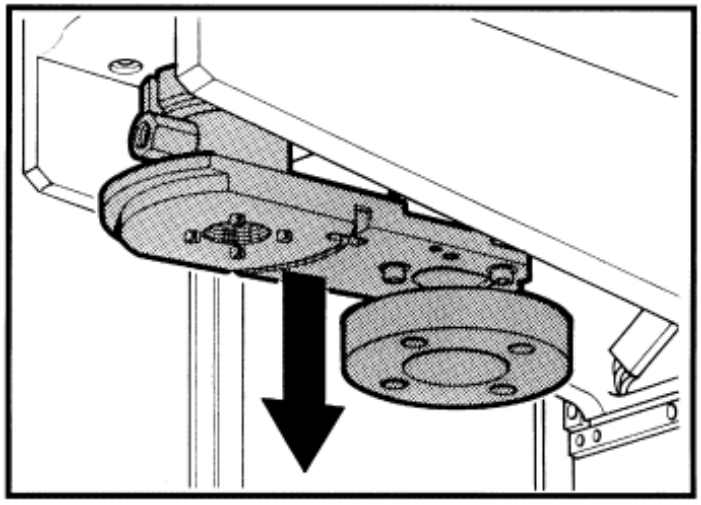

CAUTION
Do not stretch the Photocell **(H-18)** wire

(f) On the workbench unscrew the photocell from the connector.

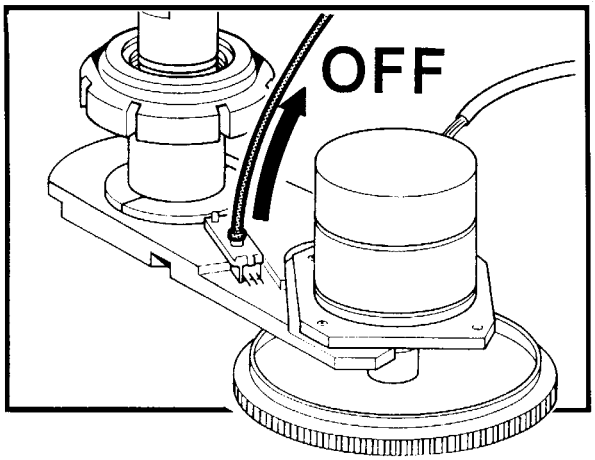

(g) Unscrew the four screws **(H-29)** that lock the motor support **(H-13)**.

(h) Remove the gasket **(H-17)** and **(H-12)**.

(i) Clamp the support **(H-19)** and the holder **(H-8)** with two polygonal wrenches #28

(j) Remove the bearing holder socket **(H-8)**.

(k) Remove the seeger **(H-24)**.

(l) Remove the gasket reduction **(H-22)** and the teflon bush **(H-16)**.

(m) Clean the usable parts with alcohol and dry them with nitrogen.

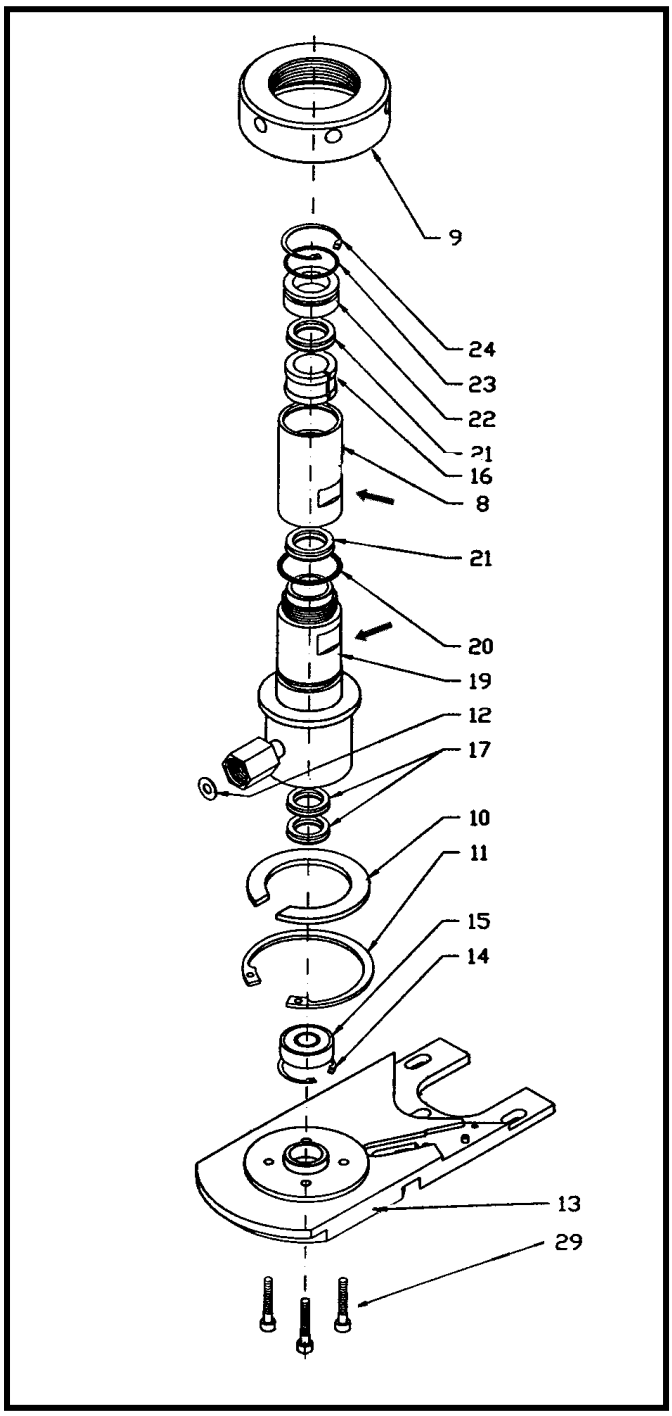

(H-0).5-3 Steady part reassemble

(a) Reassemble the fixed part by reverse procedure and by replacing the worn out parts.

(H-0).5-4 Rotating part reassemble

The head of the shaft **(H-7)** must be clean and without scale in the contact area with the quartz plate **(H-2)**.
See drawing for orientation and

(a) Slip on the shaft **(H-7)** the quartz plate **(H-2)**.
(b) Slip on the shaft **(H-7)** the pusher **(H-3)**.
(c) Slip on the shaft **(H-7)** the spring **(H-4)**.

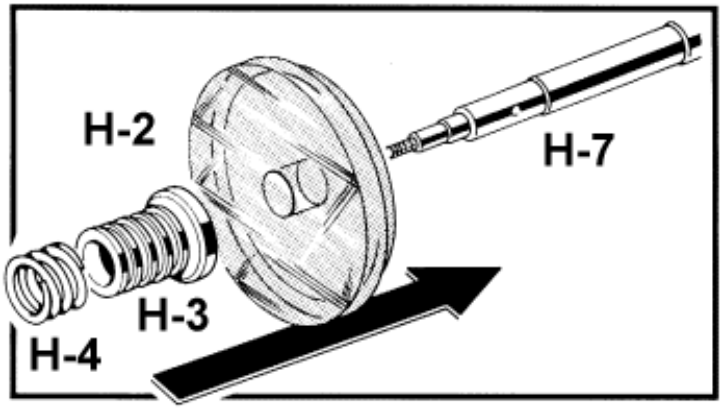

(d) Slip on the shaft **(H-7)** the threaded ring **(H-5)**.

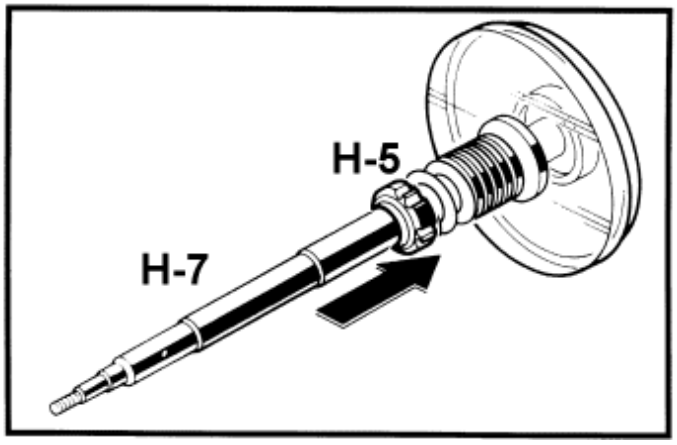

(e) Clamp the shaft with a vice in the clamping area, in horizontal position.

> ⚠ **CAUTION**
> Interpose a soft metal plate between the shaft and the vice's jaw (ex. Aluminum) no to damage the shaft

(f) With a pin wrench (size 25-32), tighten the threaded ring **(H-5)**. The ring must be completely end run.

> ⚠ **CAUTION**
> Check that the gap between the pusher end **(H-3)** and the ring head **(H-5)** is not higher **17 mm**

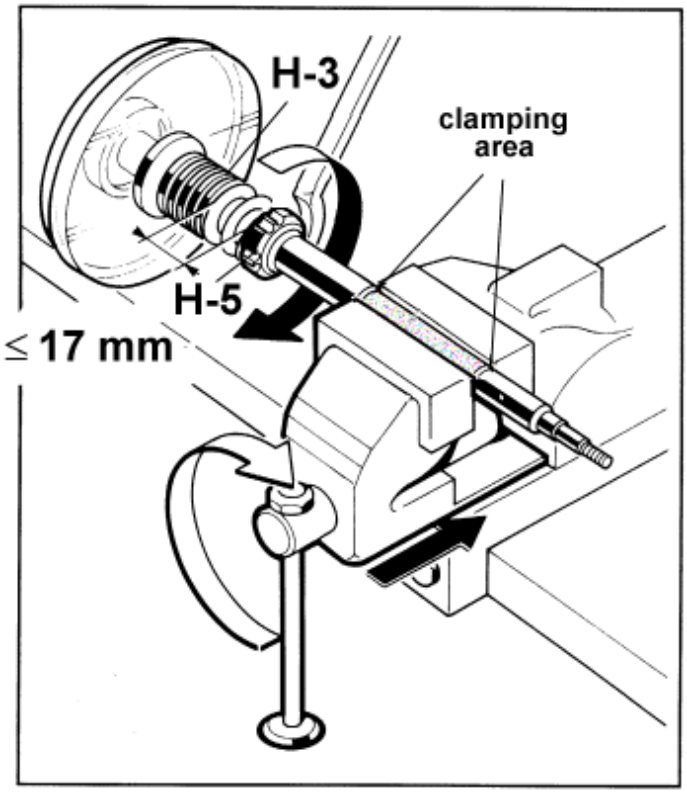

(g) Slip the shaft in the shutter plate and make sure it fits the bearing perfectly **(H-15)** so as to let the terminal part protrude of about **25mm.**

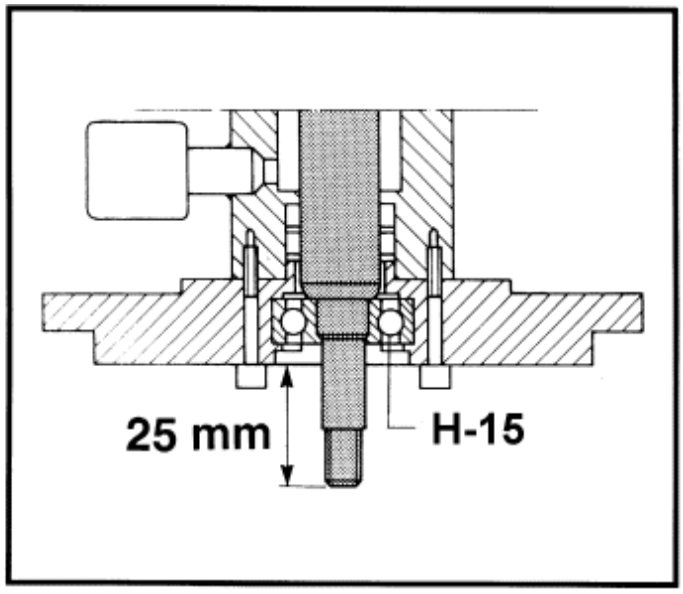

(h) Slip the belt **(H-35)** in the motor pulley **(H-33)**.

(i) Wrap the belt **(H-35)** around the pulley **(H-6)**.

(j) Keep the belt **(H-35)** stretched out and slip the pulley **(H-6)** in the threaded part of the shaft against the bearing **(H-15)**.

(k) Push the pulley **(H-6)** against the bearing **(H-15)** until the shaft **(H-7)** threaded end sticks out of the pulley **(H-6)** (help the shaft movement with small strokes on the shaft head).

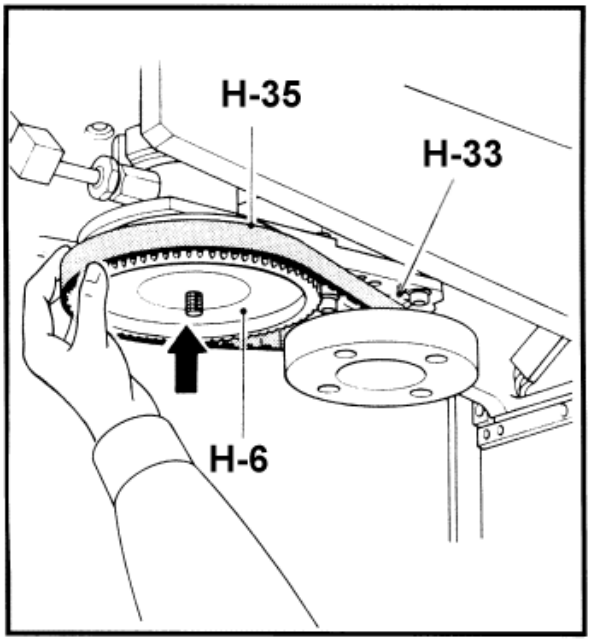

⚠ WARNING
During the preceding operation, firmly hold the pulley **(H-6)** in contact with the bearing **(H-15)**.
Failing to do so could bend the motor shaft

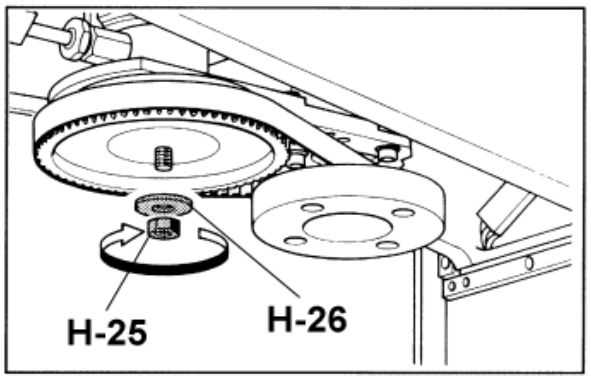

(l) Insert the washer **(H-26)** and the nut **(H-25)** on the shaft **(H-7)**. Hold the shaft head with a pin wrench (size 40-50) and tight the nut with a polygonal wrench # 13

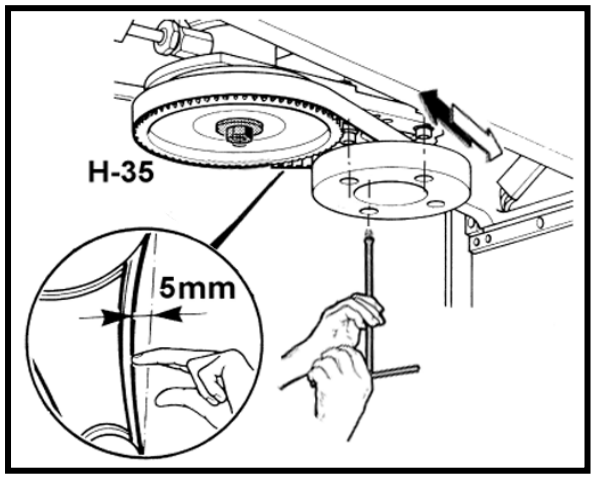

⚠ WARNING
Check the correct stretch of the belt (H-35).
The belt is correctly stretch, when it doesn't get out to the pulley **(H-6)** and when, pushing the belt between the two pulley with a light applied force (approx. 0,5 Kg), the bend will be around **5mm**.
To stretch the belt, align the flywheel **(H-34)** holes with the motor-support screws; loose the screws with Allen wrench (size #5), move the motor and the flywheel block and tighten the screws.

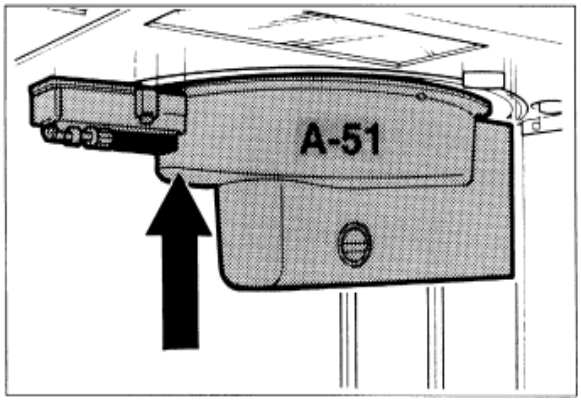

(m) reassemble the turn plate group protection carter **(A-51)**.

(H-0).6 Turn plate group calibration

For to control the quartz support plate flatness, place a centesimal comparator with magnetic base onto shutter plate.
Place comparator tip on Susceptor support tube rest surface and use foot-lever to rotate the quartz support plate. Measure max and min points. The difference between the two points must not be greater than 13 hundredths. When this value is exceeded, replace the rotation shaft or some of its internal components (teflon bush, pusher, spring, bearing, seals).

(H-0).7 Suggestions

None

(H-30) STAINLESS STEEL FLEXIBLE TUBE

CAUTION Before beginning the following maintenance operations, make sure that the quartz-guard is always backed, because in REACTOR MAINTENANCE, the safety photocell of the quartz-guard does not work and there can be interference with quartz-guard during shutter plate movement, with possible damages.

Before proceeding to any cleaning or maintenance, return to the MAIN MENU and select the REACTOR MANAGEMENT command.
This command is available only if the safety requirements are met (see the Operator manual).

(H-30).1 Special equipment needed for this item :

VCR gasket

(H-30).2 Special tools needed for this item :

Set of fixed key

(H-30).3 Controls :

After maintenance always perform H2 leak test. Before performing the test all the connection have been tighten.
Then proceed with the leak test:
From the **GAS PANEL** page, open the hydrogen supply using the **H2A PURGE** command and setting at **200 liters**. Make sure that **200 lt** effectively pass through the **PURGE flow meter** - this is visible at the **GAS PANEL** on the reading column-.
Using the **LEAK detector**, check for any at the following points:

a. Rotation plate **VCR** union.
b. Between pulley and rotation body.
c. Hydrogen purge flexible tube

When you have finished the test, shut the **H2A PURGE** valve opening **N2A.**

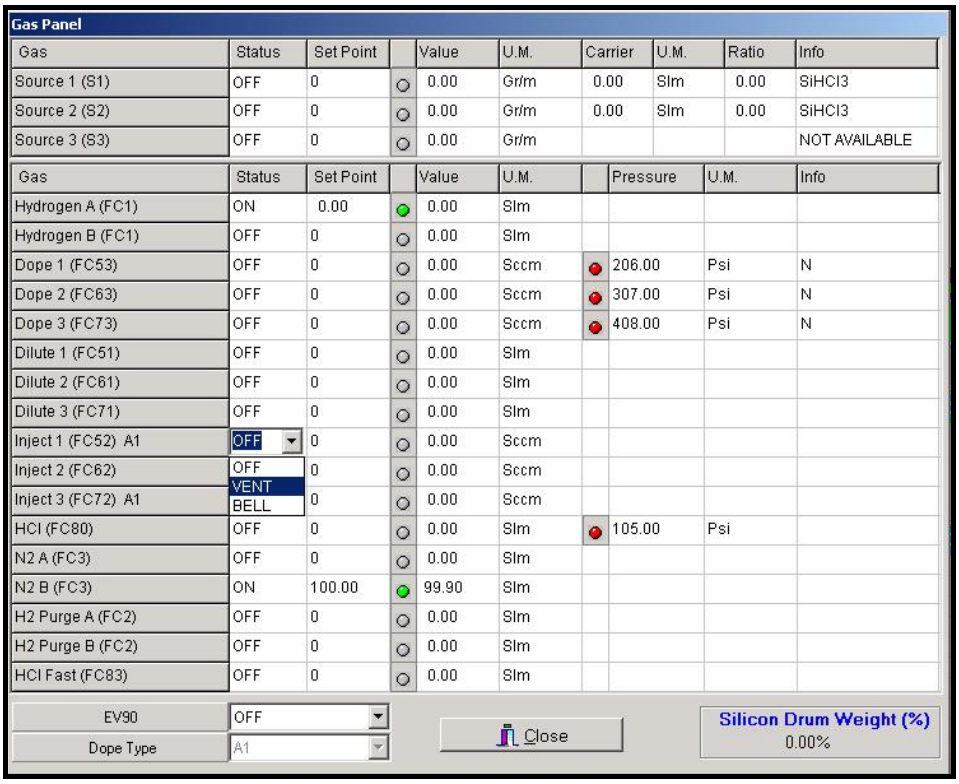

Gas Panel

Gas	Status	Set Point		Value	U.M.	Carrier	U.M.	Ratio	Info
Source 1 (S1)	OFF	0		0.00	Gr/m	0.00	Slm	0.00	SiHCl3
Source 2 (S2)	OFF	0		0.00	Gr/m	0.00	Slm	0.00	SiHCl3
Source 3 (S3)	OFF	0		0.00	Gr/m				NOT AVAILABLE

Gas	Status	Set Point		Value	U.M.		Pressure	U.M.	Info
Hydrogen A (FC1)	ON	0.00		0.00	Slm				
Hydrogen B (FC1)	OFF	0		0.00	Slm				
Dope 1 (FC53)	OFF	0		0.00	Sccm		206.00	Psi	N
Dope 2 (FC63)	OFF	0		0.00	Sccm		307.00	Psi	N
Dope 3 (FC73)	OFF	0		0.00	Sccm		408.00	Psi	N
Dilute 1 (FC51)	OFF	0		0.00	Slm				
Dilute 2 (FC61)	OFF	0		0.00	Slm				
Dilute 3 (FC71)	OFF	0		0.00	Slm				
Inject 1 (FC52) A1	OFF	0		0.00	Sccm				
Inject 2 (FC62)	OFF	0		0.00	Sccm				
Inject 3 (FC72) A1	VENT	0		0.00	Sccm				
HCl (FC80)	BELL	0		0.00	Slm		105.00	Psi	
N2 A (FC3)	OFF	0		0.00	Slm				
N2 B (FC3)	ON	100.00		99.90	Slm				
H2 Purge A (FC2)	OFF	0		0.00	Slm				
H2 Purge B (FC2)	OFF	0		0.00	Slm				
HCl Fast (FC83)	OFF	0		0.00	Slm				

EV90 OFF

Dope Type A1

Close

Silicon Drum Weight (%) 0.00%

(H-30).4 Scheduled maintenance (PM) :

Every 12 weeks :

Remove the rotation group protection carter **(A-51)**

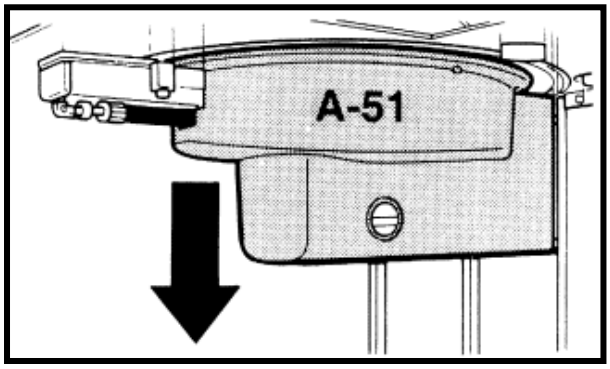

Use two fixed key, (nr°16 and nr°17), disconnect the flexible tube from the gas panel piping output placed behind the lift door.

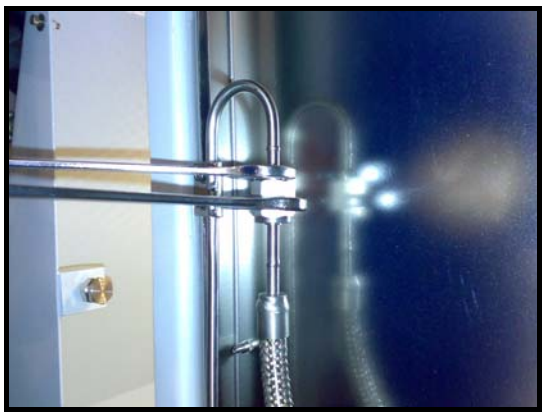

Disconnect too, the VCR connection on the rotation group and pull it out slowly, paying attention to do not damage the others tube.

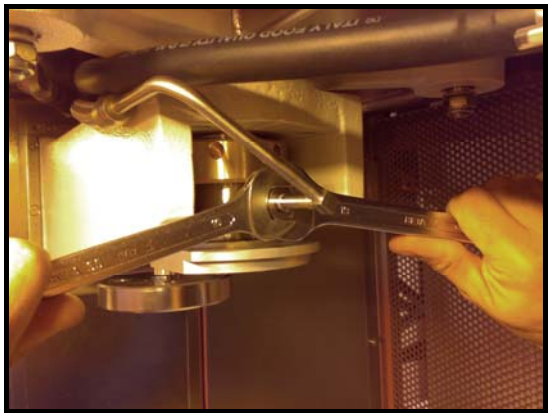

Insert the new flexible tube **(H-30)** slowly from the loading bay.

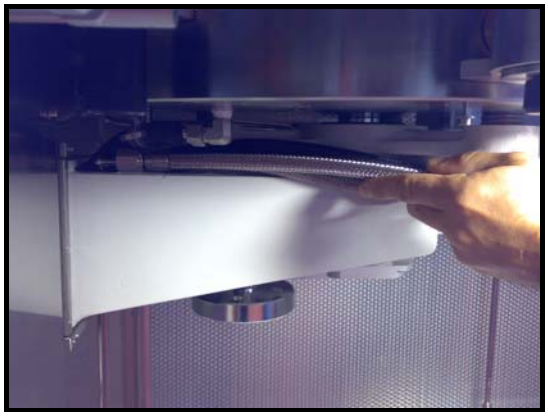

Follow the others tube route.

Insert the new ¼ VCR gasket and than by means of the two fixed keys tight the connection.

⚠ WARNING

Use only Nichel' VCR gasket.
Do not overtight the VCR otherwise it will leak.
Please see the reactor enclosure manual to have more reference about VCR fittings.

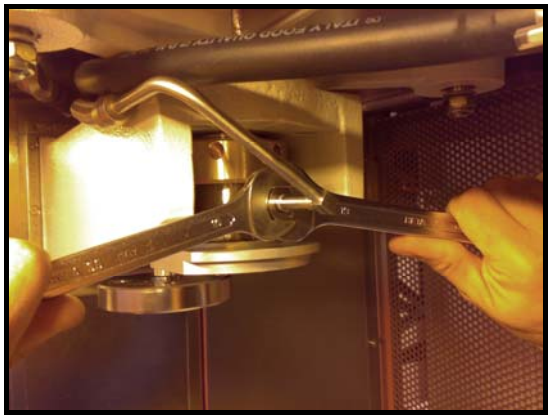

Please note that the tube should remain as much more than possible near the shutter plate support **(F-13),** otherwise the protection carter **(A-51)** would not fit.

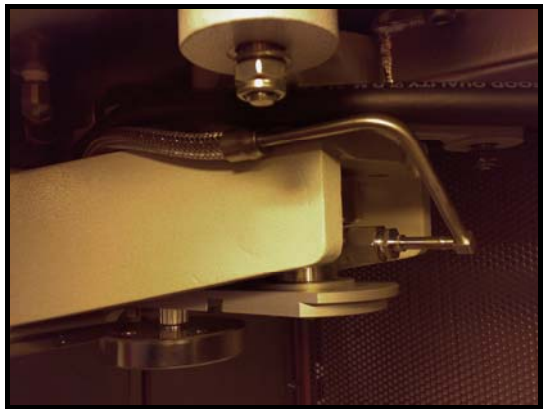

Insert the new ¼ VCR gasket and than by means of the two fixed keys tight the connection.

⚠ WARNING

Use only Nichel' VCR gasket.
Do not overtight the VCR otherwise it will leak.
Please see the reactor enclosure manual to have more reference about VCR fittings.

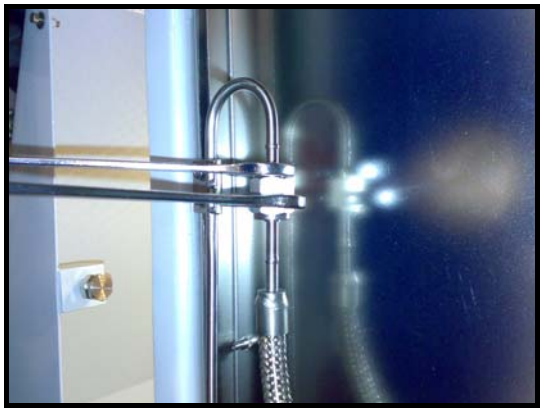

At the end of the installation the purging tube **(H-30)** must lay naturally and it should not be bended at all.

Reassemble the turn
plate group protection carter **(A-51)**.

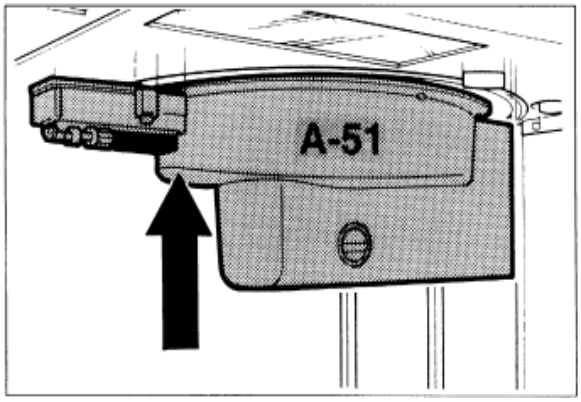

(L-0) EXHAUST VALVE AND EXHAUST TUBE

CAUTION Before beginning the following maintenance operations, make sure that the quartz-guard is always backed, because in REACTOR MAINTENANCE, the safety photocell of the quartz-guard does not work and there can be interference with quartz-guard during shutter plate movement, with possible damages.

Before proceeding to any cleaning or maintenance, return to the MAIN MENU and select the REACTOR MANAGEMENT command.
This command is available only if the safety requirements are met (see the Operator manual).

CAUTION Only the personnel authorized to handle acids is allowed to carry out any cleaning and washing operation on this group.

CAUTION Dip the EXHAUST VALVE and the EXHAUST TUBE in water and wash it before using acids. Failing to do so would cause violent explosions with serious damage to the maintenance engineer.

CAUTION To avoid that pyrophoric deposits in the exhaust line come in contact with air and cause explosions, when the exhaust line is opened for cleaning or other maintenance operations it is advisable to :
1. Switch OFF the scrubber in order to prevent air sucking in the exhaust line
2. Fit a blank to the line from the open point to the scrubber. The blank must be fitted as soon the pipe is open.
3. Be sure that a N2 purge from the reactor to the open point is guaranteed.

(L-0).1 Special equipment needed for this item :

- Washing hood suitable for Nitric / Hydrofluoric solution.
- All individual protections for the personnel working in contact with acids.

(L-0).2 Special tools needed for this item :

- Bench vise or a similar tool.
- Wrench size 32.
- Acid solution of 100cc Nitric, 300cc Hydrofluoric in 1000cc Water (H_2O).
- Feeler gauge.

(L-0).3 Controls :

After maintenance always perform H2 leak test. Before performing the test:
- Switch on the scrubber
- Verify that there are no blanks in the line
- All the connection have been tighten.
- Then proceed with the leak test:

From the **GAS PANEL** page, open the hydrogen supply using the **H2A PURGE** command and setting at **200 liters**. Make sure that **200 lt** effectively pass through the **PURGE flowmeter** - this is visible at the **GAS PANEL** on the reading column-.
Using the **LEAK detector**, check for any at the following points:

a. Around the manifold.
b. Manifold valve seal (metal O-ring).
c Discharge tube valve seal (metal O-ring).
d. Seal at outlet of customer lines discharge tube.

When you have finished the test, shut the **H2A PURGE** valve via valve **N2A.**

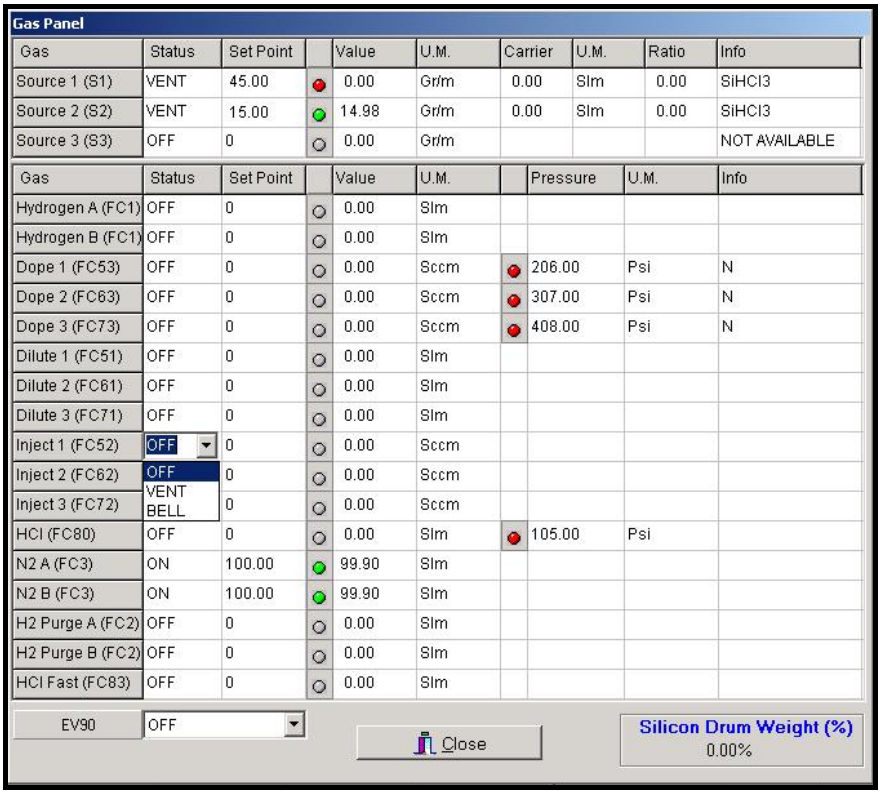

(L-0).4 Scheduled maintenance (PM) :

CAUTION The scale and the deposits on the exhaust valve can easily catch fire in case of wrong handling. Do not use dry cloths , do not use screw drivers or similar tools to remove the scale and the deposit.

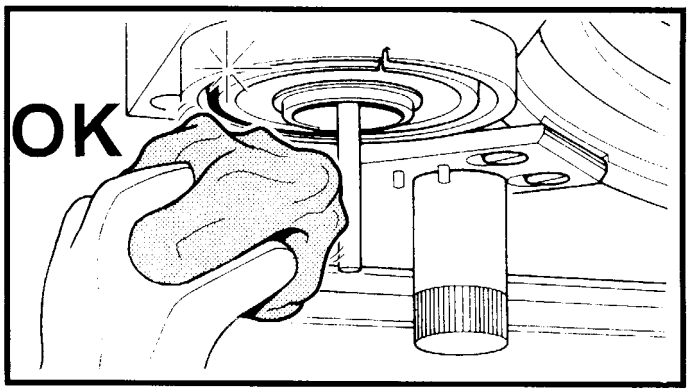

On-site cleaning

Clean the area of contact with the exhaust manifold.
These parts must be cleaned at every scheduled PM and must be kept free from scale and deposits.
To clean these parts, gently use a soft lintfree wet cloth soaked in DI water.

O-ring replacement

Replace the O-rings **(L-10)** and **(L-11)**.

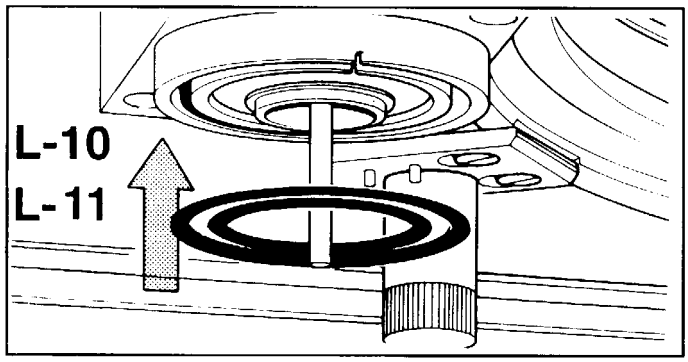

Removal and cleaning

(a) Remove the valve (see Removal procedure) and clean the metal parts.

(b) Put the metal parts in the H_2O/Nitric / Hydrofluoric solution (use a proper washing hood).

(c) Wait until all the surfaces are completely clean.

(d) if necessary remove residual scale and deposits with a hard plastic tool

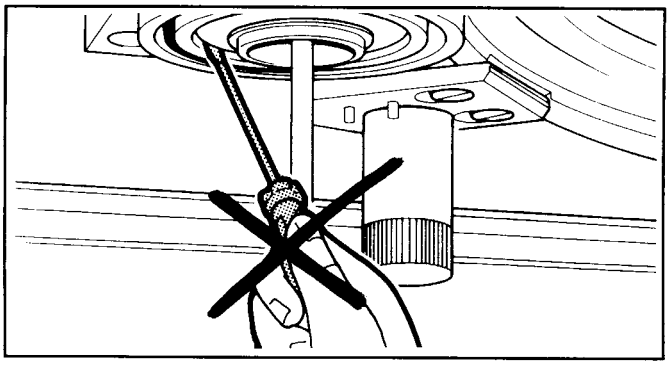

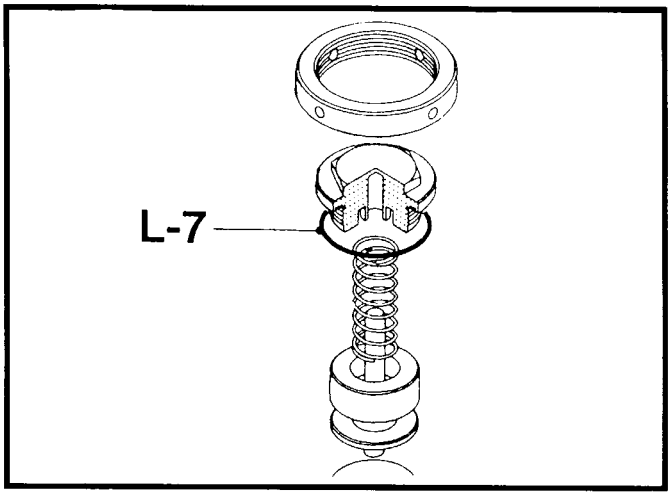

⚠ **CAUTION** The scale and the deposits on the exhaust valve can easily catch fire in case of wrong handling .
Do not use dry cloths, do not use screw drivers or similar tools to remove the scale and the deposit.

(e) Check all the parts and replace the worn out parts.

(f) **Always** replace the **O-ring (L-7).**

(L-0).5 Long term maintenance :

None

(L-0).6 Exhaust valve removal

(a) Open the shutter plate completely (LIFT DOWN command).

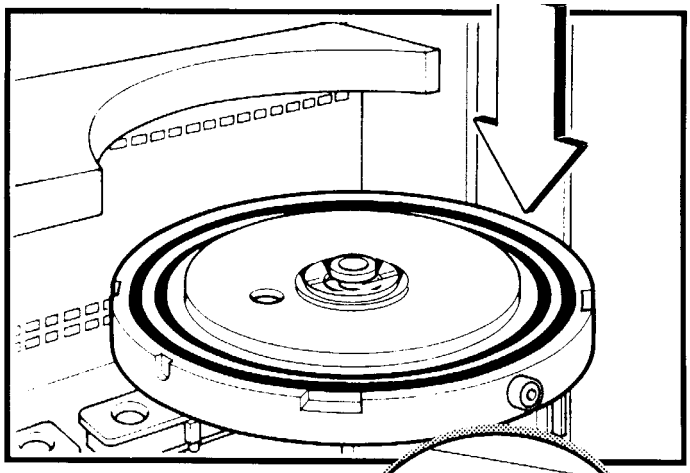

(b) Remove the upper shield station **A** or **B** (**(A-65)** or **(A-66)**

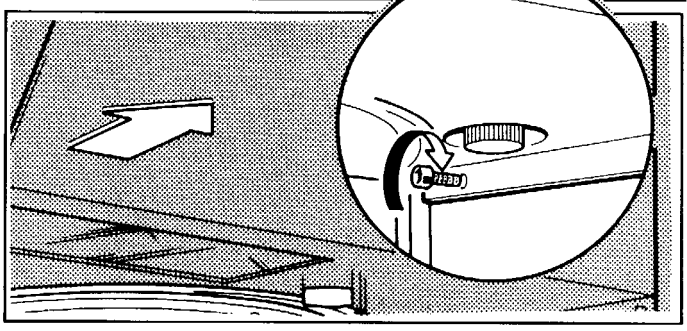

(c) Unscrew the 4 hollowed screws **(L-22)** and disconnect the exhaust gas pipe **(L-13)**.
Remove the metal O-ring **(L-12)**

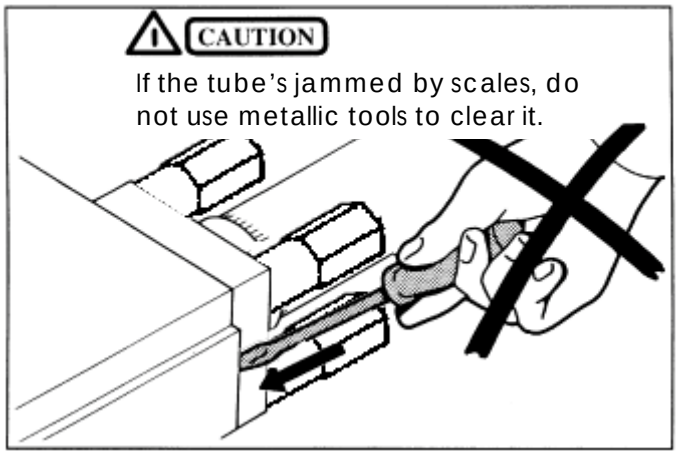

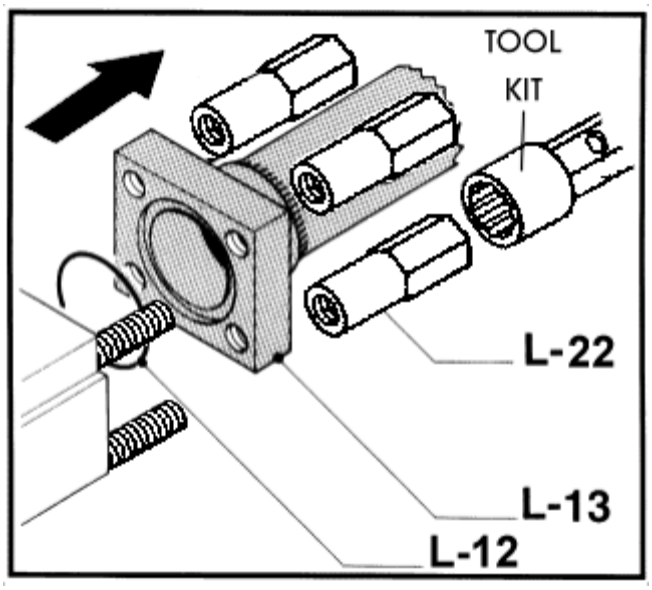

(d) Disconnect the fitting **(L-9)** (the relevant pipes connect the exhaust valves to the pressure switches **(A-9)**, **(A-10)**, **(A-67)**, **(A-68)** and to the vacuum gauge **(A-11)**.

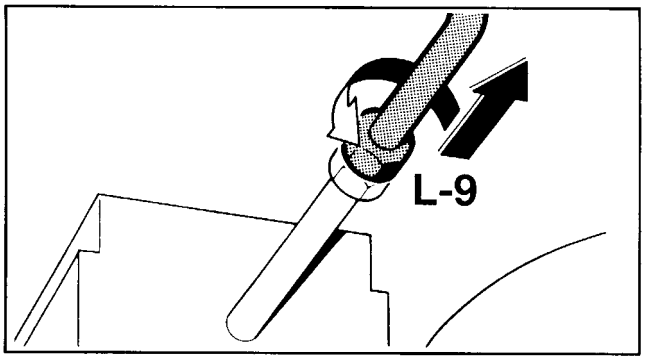

(e) Unscrew the 4 screws **(L-15)**.

(f) Remove the whole valve.

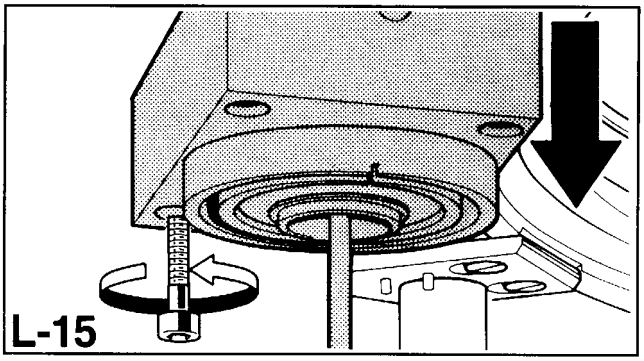

(g) Lock the valve body with a bench vise or a similar tool.

CAUTION Interpose a soft metal plate between the valve body and the vice's jaw (ex. Aluminum) no to damage the valve

(h) Use the wrench size 32 to unscrew the cap **(L-6)**.

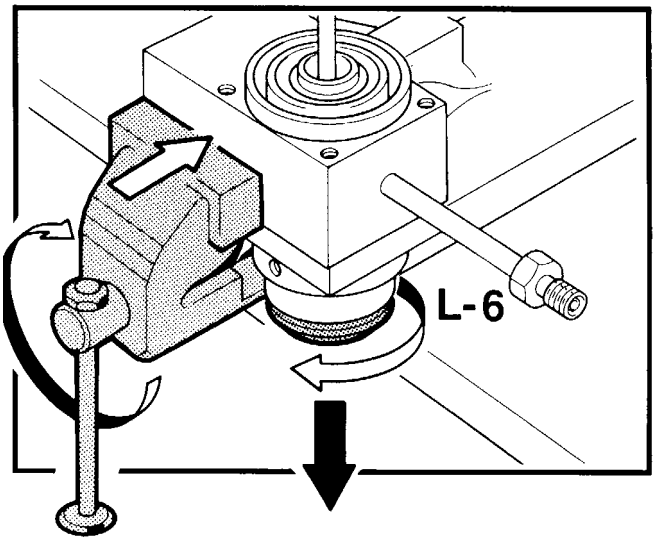

(i) Remove the shutter **(L-2)** + **(L-3)** and the spring **(L-1)**.

Note:	replace the spring **(L-1)** and the graphite shutter **(L-3)** every 26 weeks

The next operations are only for cleaning procedure or to replace the graphite shutter **(L-3)**.

(j) Unscrew the stud bolt **(L-5)**.

(k) Hold the graphite shutter **(L-3)** and remove the stud bolt **(L-5)** and the washer **(L-4)**.

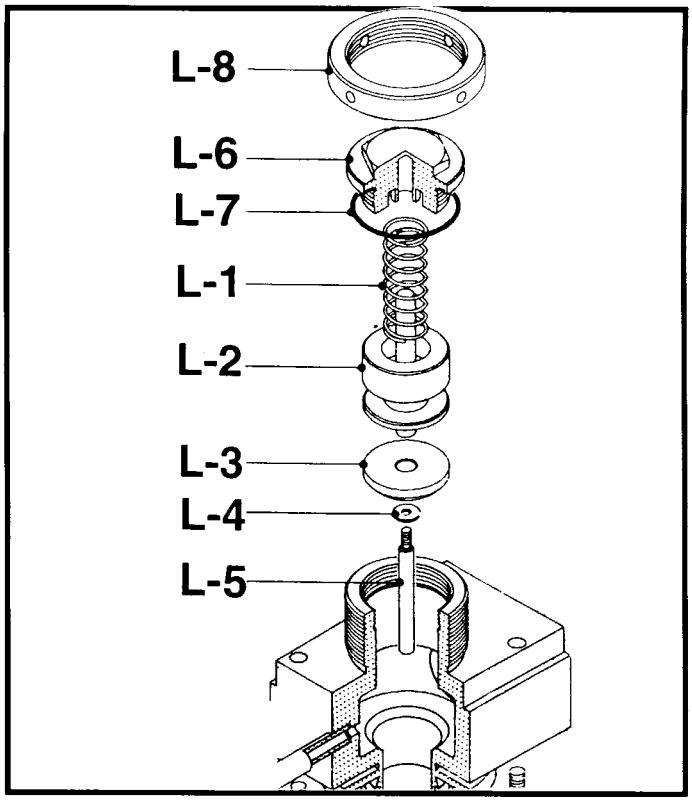

(L-0).7 Exhaust tube removal

Note:	The tube **(L-13)** is to be disconnected after the exhaust valve has been removed.

(a) Remove the shields from inside the gas metering opening.

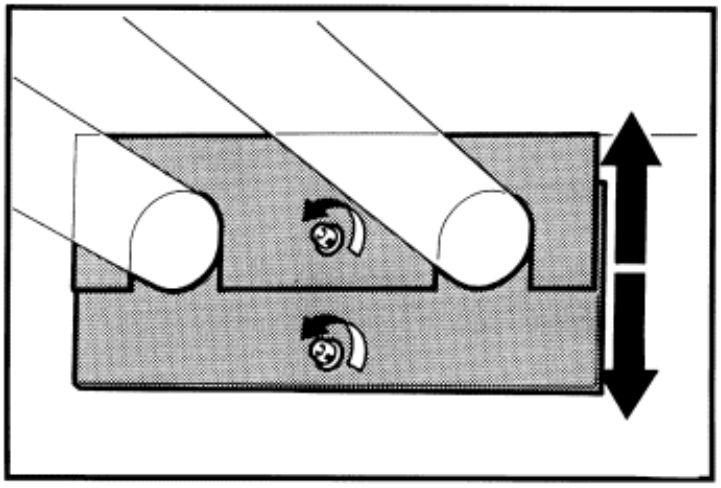

(b) Disconnect the tubes by unscrewing the clamping Ring **(L-18)**.

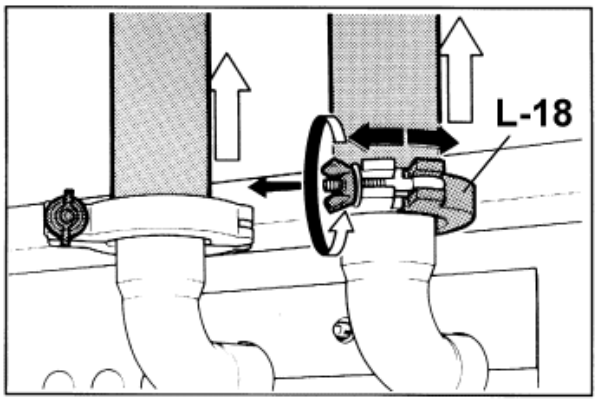

Note: If necessary, replace the O-ring **(L-16)** of the centering collar.

Note: If you have the optional Exhaust Flexible Tube **(L-23)**, replace the tube and the additional O-ring Viton **(L-16)** every 48 weeks

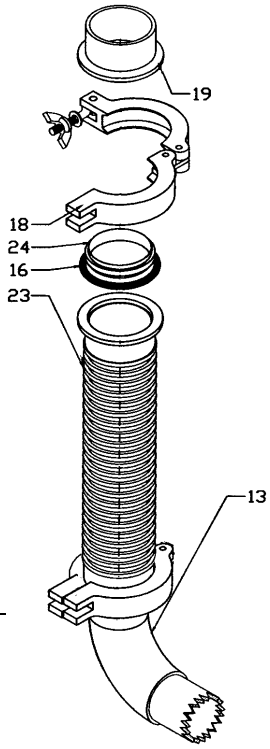

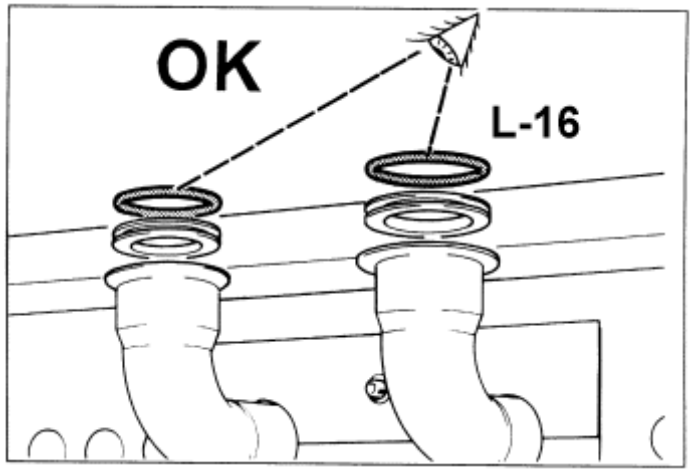

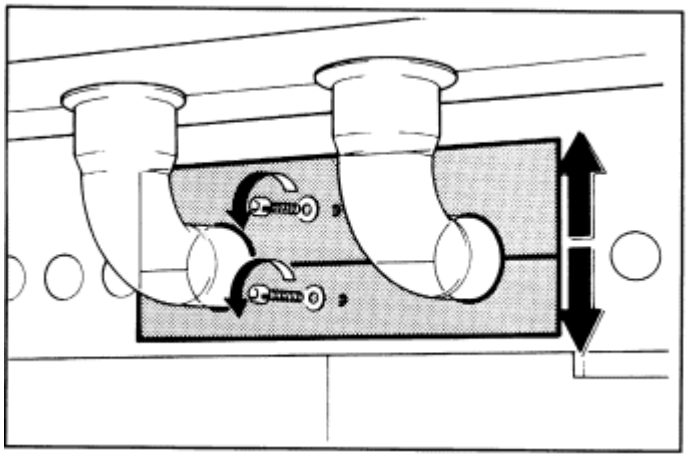

(c) Remove the external shields.

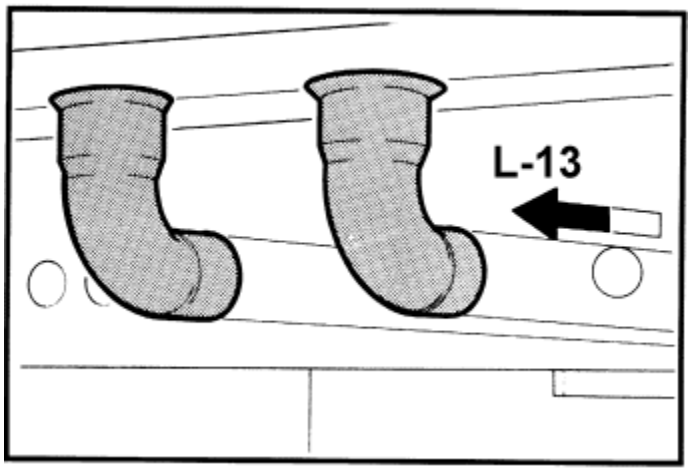

(d) Extract the tubes **(L-13)** from the gas-metering opening side.

(e) Proceed to the cleaning operations by following the warning notice given at the beginning of this chapter.

CAUTION **DANGER OF EXPLOSION**

Do not attempt to clean the tube with metal objects, pigs or dry cloths.

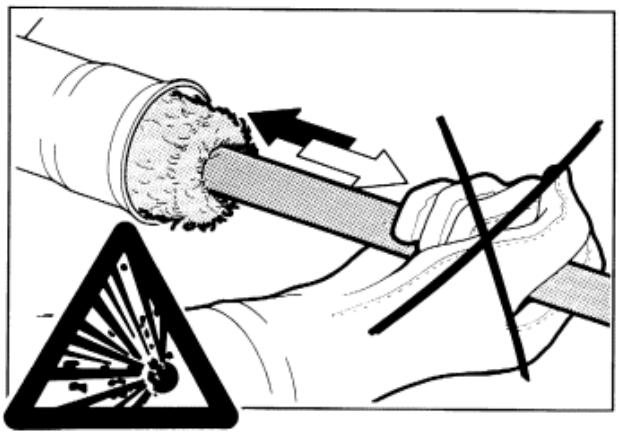

(f) Complete all cleaning operations and reassemble the tubes.

(L-0).8 Exhaust valve reassemble

(a) **Always** replace the O-ring **(L-7)**.

(b) Insert the new graphite shutter **(L-3)** and tighten the stud bolt **(L-5)** on the washer **(L-4)**.

(c) Insert the spring **(L-1)** and the shutter **(L-2)** + **(L-3)**.

(d) Position the cap **(L-6)**.

(e) Carefully align the hole with the shutter shaft

(f) Lock the cap **(L-6)** with a **2 Kgm** torque approx.

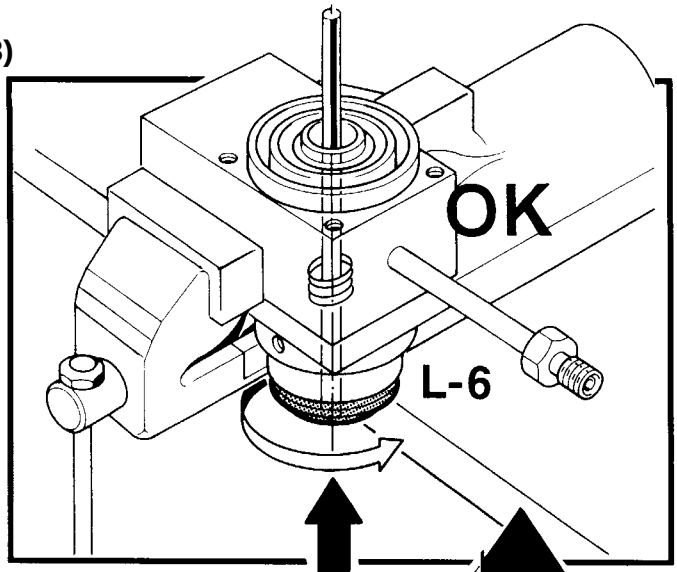

(g) **Do not mount the O-ring (L-10) and (L-11)**

(h) Cross lock the 4 screws **(L-15)** (lock the screws in the same diagonal first, then the others)

(i) Set the valve proper level (see calibration)

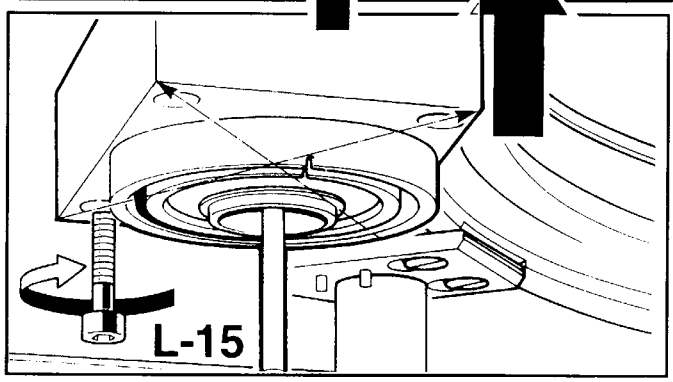

(j) Check the O-ring **(L-20)** and connect the fitting **(L-9)**.

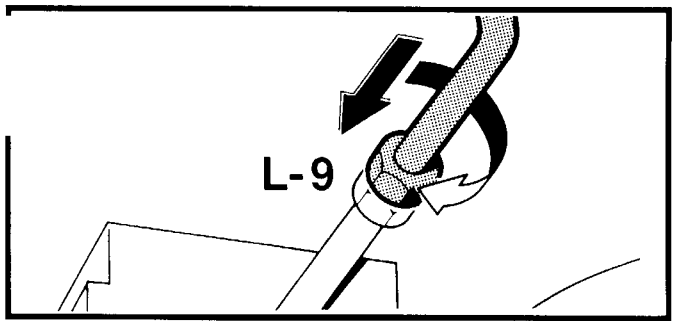

(k) **Always** replace the metal O-ring **(L-12)**.

(l) Check again that area of contact between the flange **(L-13)** and the exhaust valve is clean

(m) Tighten the 4 hollowed screws **(L-22)**.

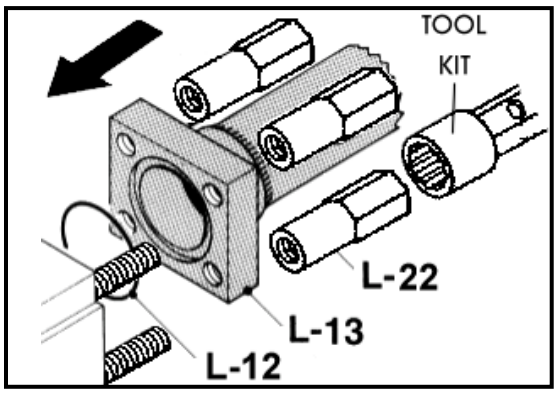

(L-0).8 Exhaust valve calibration

Leveling

CAUTION **Important preliminary information**

(1) If the exhaust valve had not been removed, it is possible to perform the leveling procedure without disconnecting the exhaust pipe and the fitting (L-9)

(2) The leveling procedure must be performed with
- the bell-jar properly mounted
- the O-ring **(D-2)** and **(D-22)** mounted on the shutter plate.

(a) Open the shutter plate **(D-1)** completely (LIFT DOWN command).

(b) Remove the upper shield station **A (B)** (**(A-65)** or **(A-66)**).

(c) Remove the O-rings **(L-10)** and **(L-11)** if mounted.

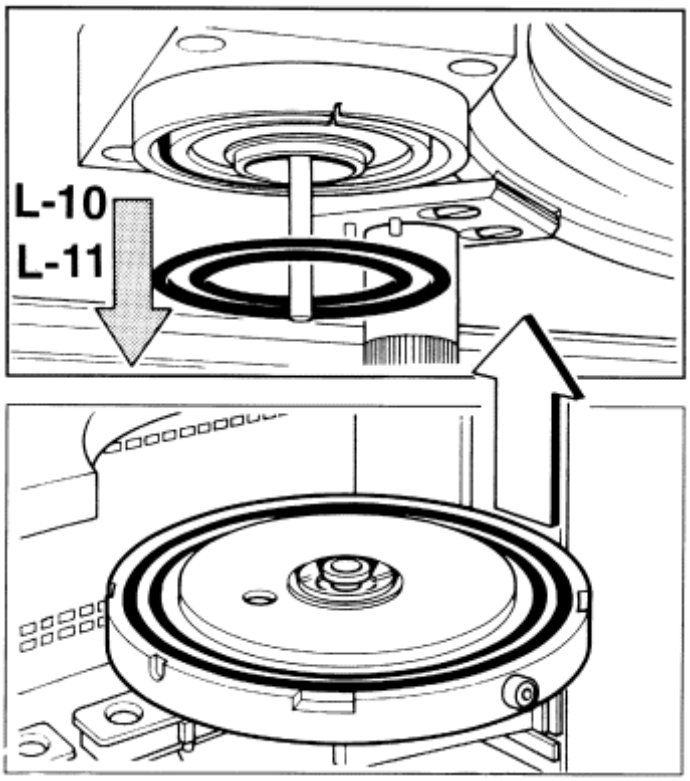

(d) Close the shutter plate **(D-0)** completely (LIFT UP command).

(e) With the feeler gauge measure the gap between the exhaust valve and the exhaust manifold.

(f) If the gap is **outside 0,2** and **0,4 mm go to point (i).**

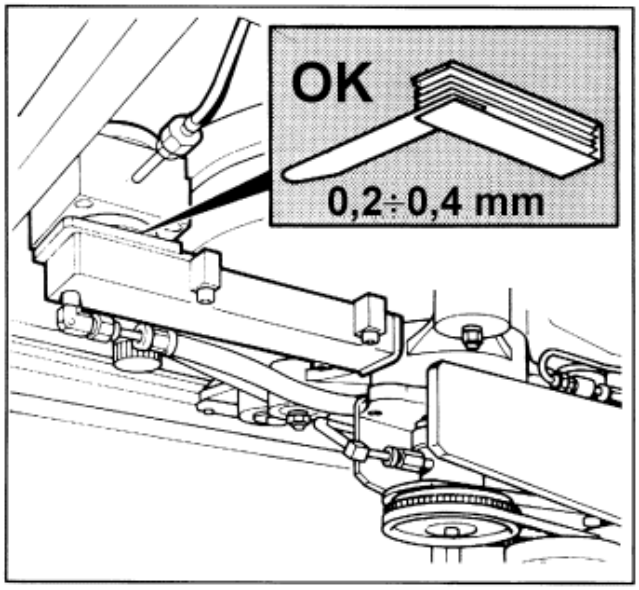

(g) Should the gap size be correct, open the shutter plate (LIFT DOWN command).

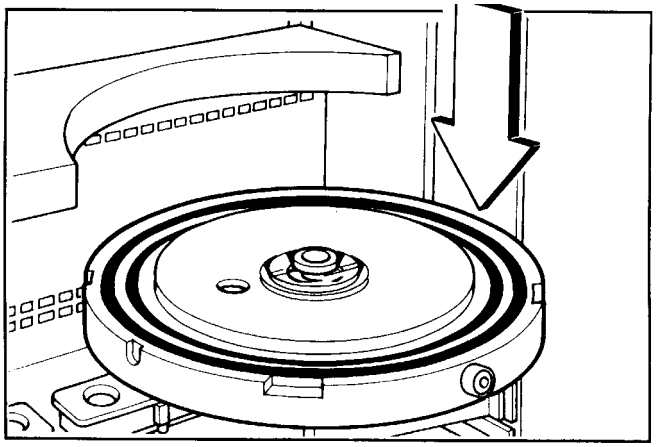

(h) put the O-ring **(L-10)** and **(L-11)** in.

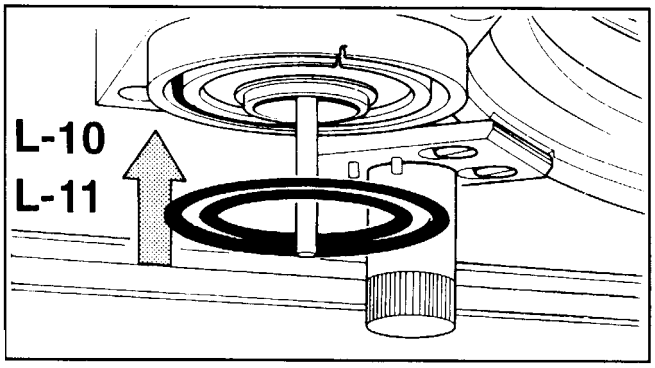

If the gap is outside 0,2 and 0,4 mm

(i) open the shutter plate **(D-1)** completely (LIFT DOWN command)

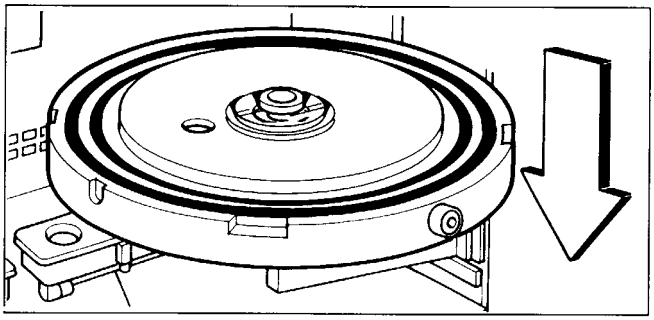

(j) loosen the 4 screws **(L-15) (4 turns approx.).**

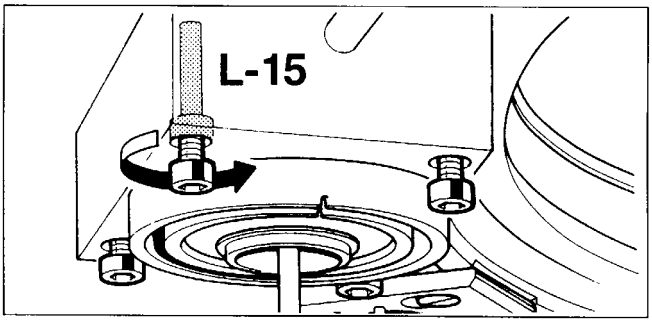

(k) On the external diameter of the threaded ring **(L-8)** there are 4 holes and 4 slots, use either of them to turn the threaded ring. With a screwdriver turn the threaded ring **(L-8)** either **clockwise to reduce the gap** or **counterclockwise to increase the gap.**
Each complete turn of the threaded ring corresponds to approx. 1,5 mm change in the exhaust valve position.
Therefore turn the threaded ring accordingly to the gap measurement of point **(e)**.

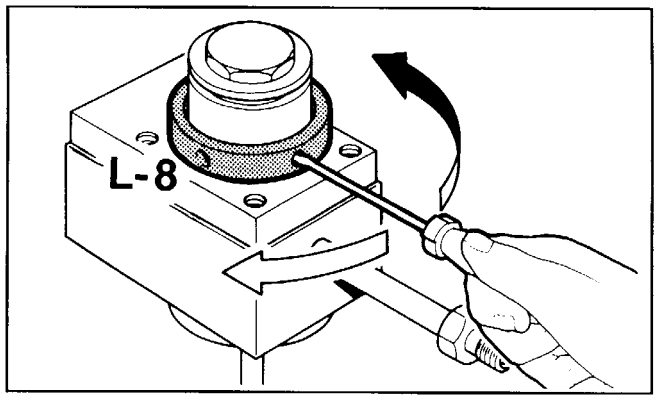

(l) Cross lock the 4 screws **(L-15)** (lock the screws in the same diagonal first, then the others).

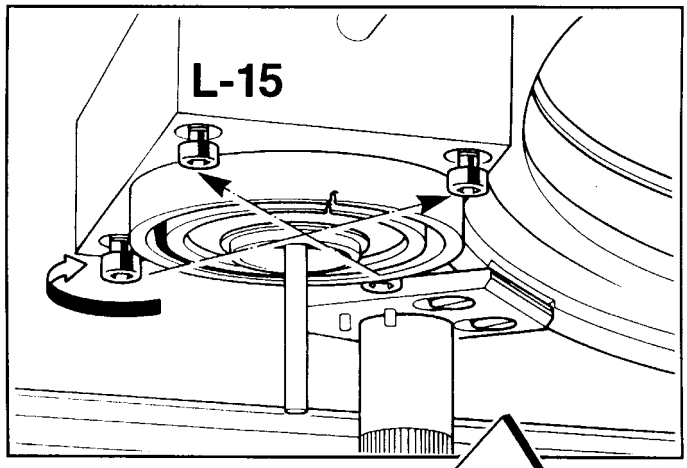

(m) close the shutter plate **(D-0)** completely (LIFT UP command).

(n) go to point **(e)** to recheck the gap.

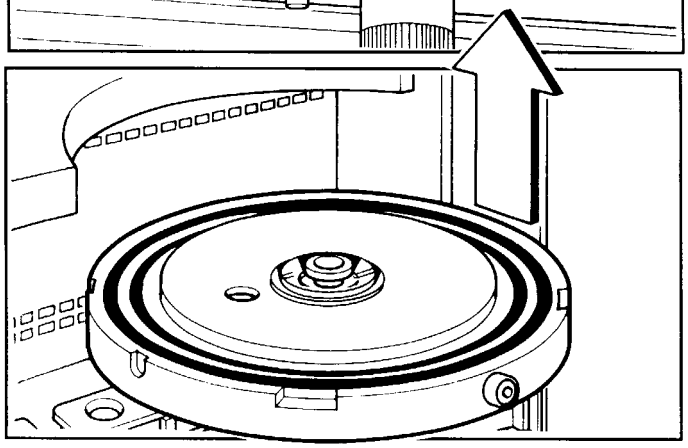

(L-0).9 Suggestions

None

(N-1) INDUCTION COIL

Before proceeding to any cleaning or maintenance, return to the MAIN MENU and select the REACTOR MANAGEMENT command.
This command is available only if the safety requirements are met (see the Operator manual).

(N-1).1 Special equipment needed for this item :

- Acid fumes hood (to prepare the ammonia solution)
- All individual protections for the personnel working in contact with ammonia

(N-1).2 Special tools needed for this item :

- A small tank to drain residual water
- A soft lintfree cloth
- Solution of 1 part ammonia (25-30% solution) and 10 parts D.I. water
  (ex.: ammonia solution 9% - D.I. water 91%)

(N-1).3 Controls :

None

(N-1).4 Scheduled maintenance (PM) :

The induction coil must be cleaned at every scheduled PM.

CAUTION

To avoid damage the reflective internal surface:
- **do not use any abrasive cloth or mechanical tool**
- **use only the specify solution**

(a) Turn the main switch **OFF** on the converter and lock it before proceed

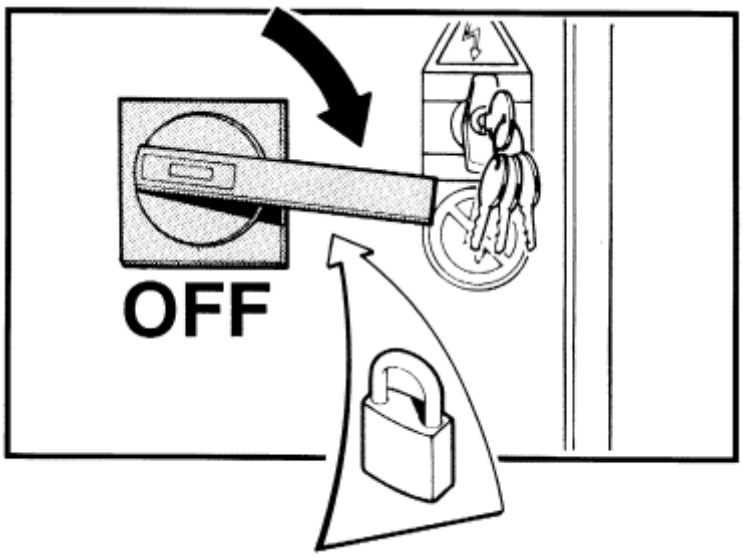

(b) Remove the quartz bell-jar (see the proper procedure **group V**).

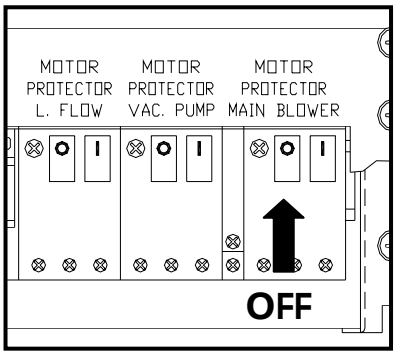

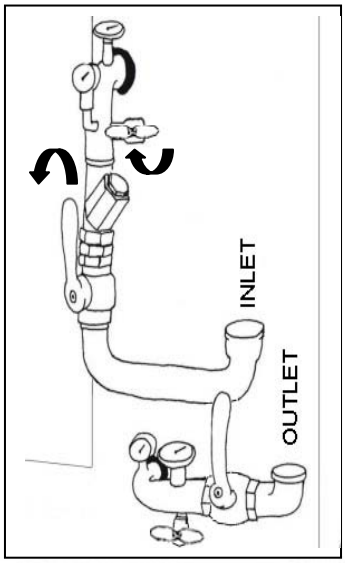

(c) Power down the fan and reactor, and shut off both delivery and return water in the line **(D I).**

(d) To clean the reflective internal surface, gently use a soft lintfree wet cloth soaked in solution ammonia-water.
As cleaning agent, use only the following solution:
1 part of ammonia (25-30% solution)
10 parts of D.I. water

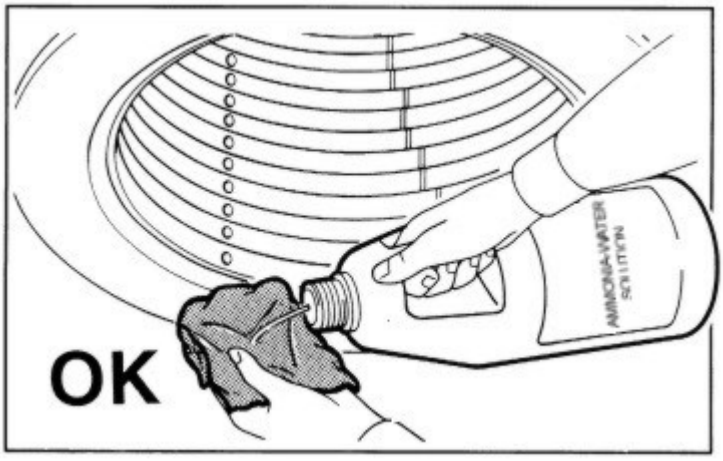

(e) Rinse the reflective internal surface, with a soft lintfree wet cloth soaked in D.I. water and put particular attention to clean of the inspection windows

(N-1).5 Long term maintenance :

REMOVING THE INDUCTION COIL

(a) Remove the induction coil as follows:

(a1) Remove the pyrometer plus the entire unit and re-locate it in the inner- most part of the induction coil chamber, avoiding dry folds on the optical fiber.

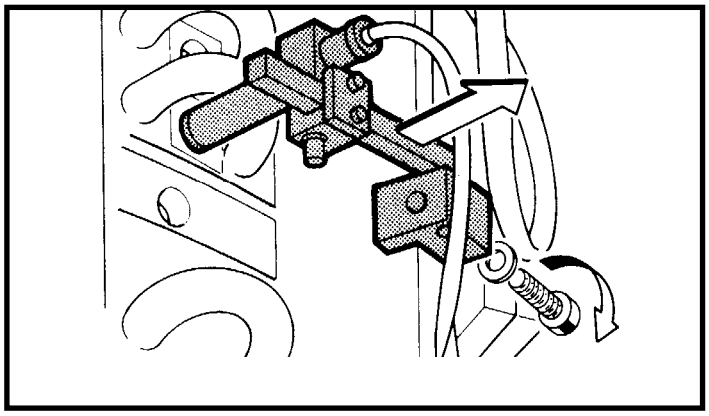

Note	Take a note of the pyrometer removal point to enable you to re-locate it correctly afterwards.

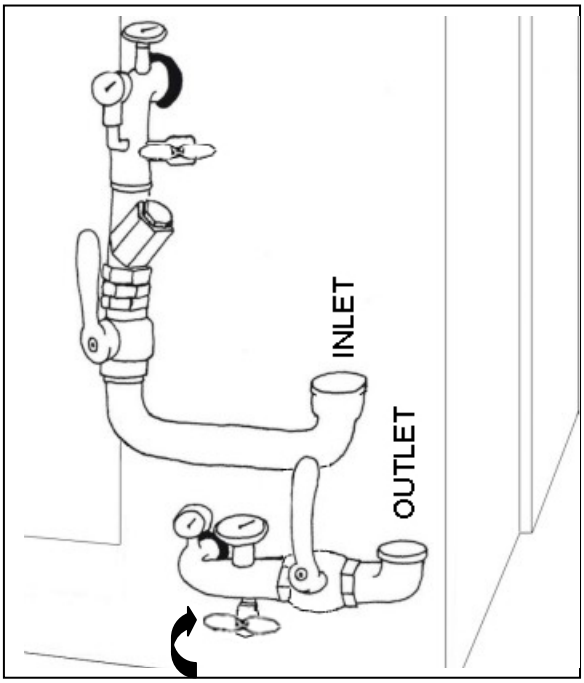

(a2) Drain water, and if the drain outlet is not connected, use a container of at least 20 liter capacity.

WARNING

DISCONNECT THE RUBBER TUBES WITH TWO HEAD WRENCHES (point **A** and **B). LOCK A HEAD WRENCH IN POINT (A) AND ROTATE ANTI-CLOCKWISE IN POINT (B) TO AVOID ACCIDENTAL BREAKING OF THE UNION ELBOW**
NOTE: MOVE THE TERMINALS OF THE CALIBRATION INDUCTANCE WITH MAX. CAUTION.

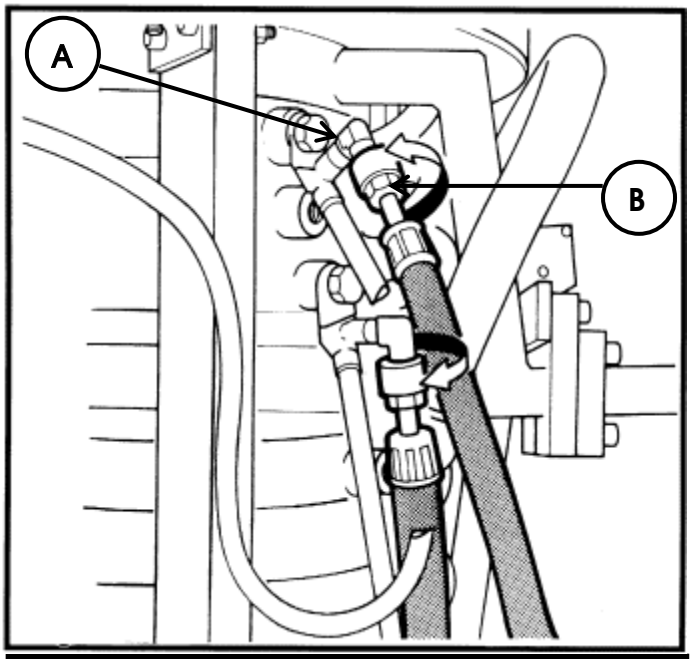

(a3) Disconnect the two rubber tubes used for the inductor, collecting residual water in a small container.

(a4) Disconnect the two bolts on the induction coil inlets, and then remove the induction coil itself.

Note	Mark the bolt connection points to enable you to re-connect the induction coil correctly afterwards.

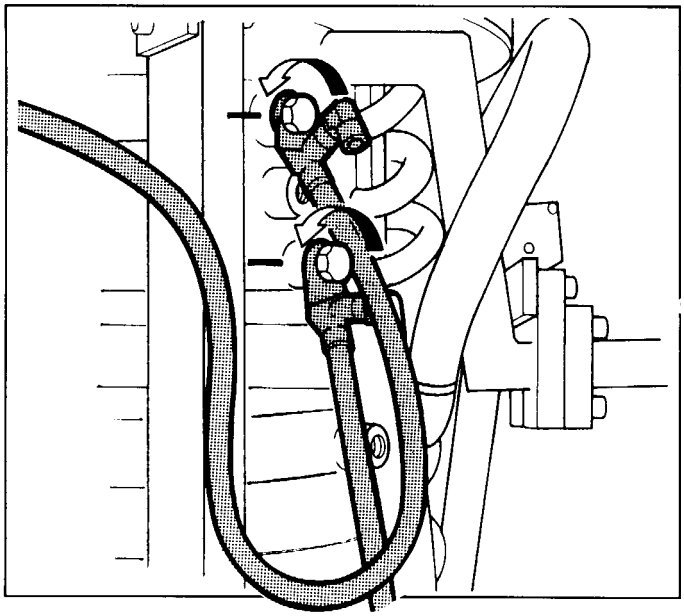

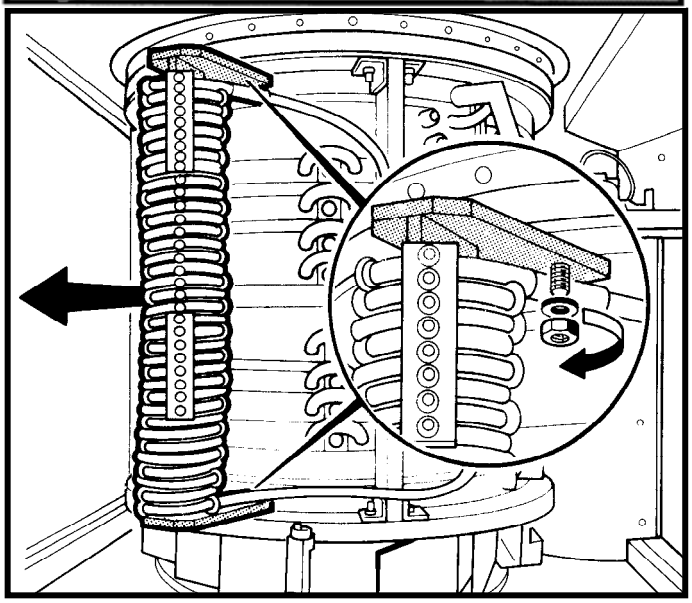

(a5) Disconnect the manifolds from the induction coil.

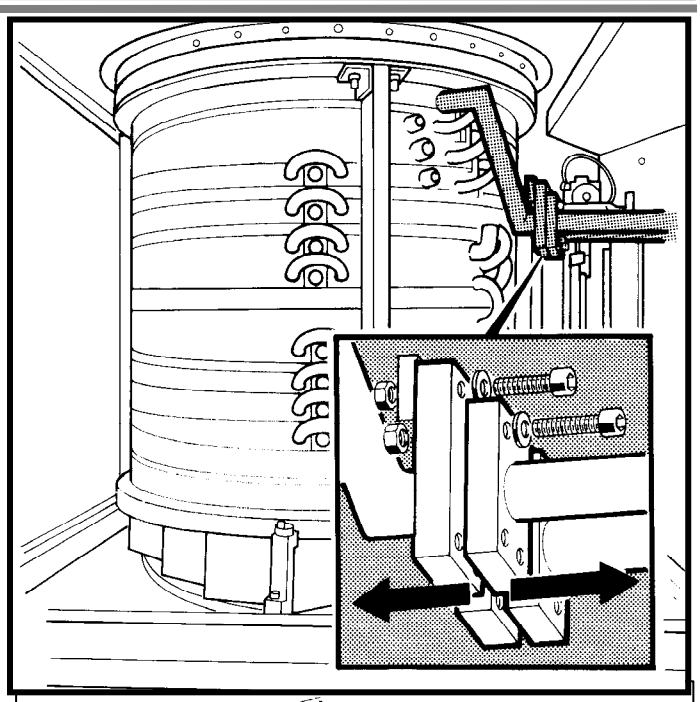

(a6) Remove the Teflon half-ring.

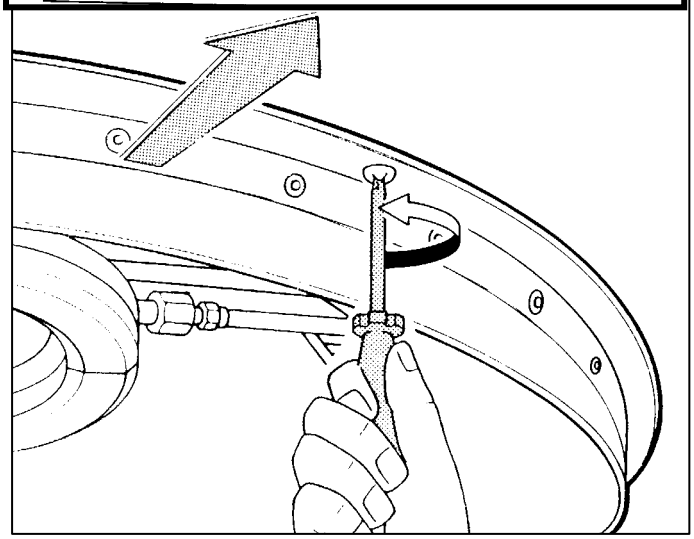

(a7) Remove the eccentric from the outermost support.

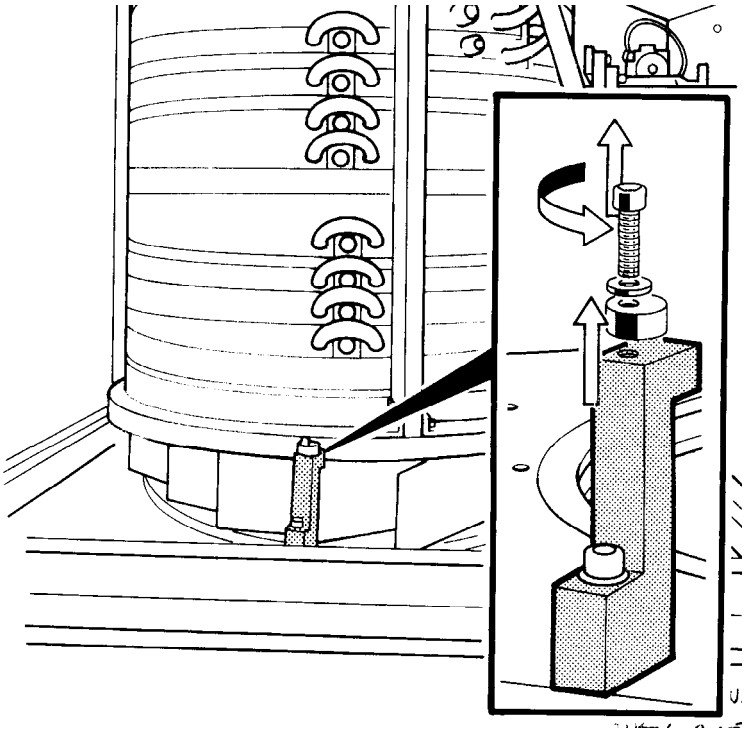

(a8) Withdraw the induction coil taking care over the turbine fins.

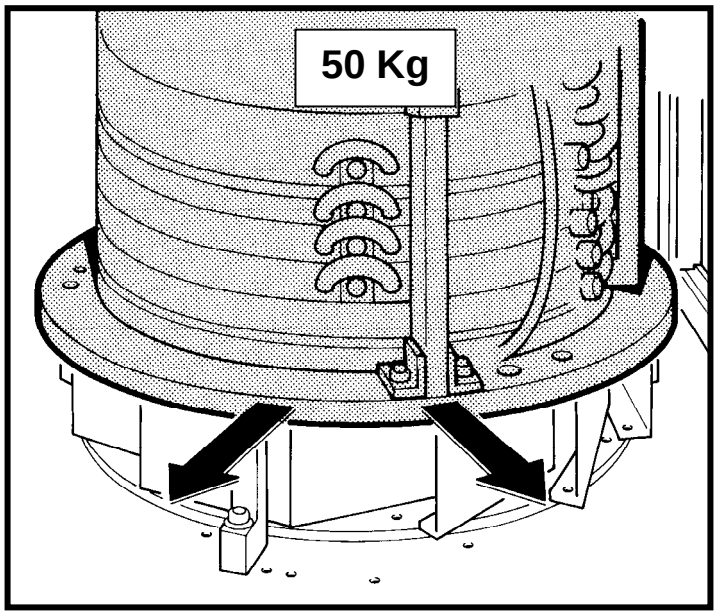

CAUTION The weight of this group is about **50 kg**.
Use only safety approved instruments. To perform this operation we suggest a minimum of two people.

(N-1).6 Induction coil reassembly

(a) Place the new induction coil in the following way:

(a1) Slide the inductor on the turbine, and locate it against the 2 supports.

WARNING: KEEP THE FLANGE UP AS MARKED

Locate the reference line marked on the lower flange in line with the external support.

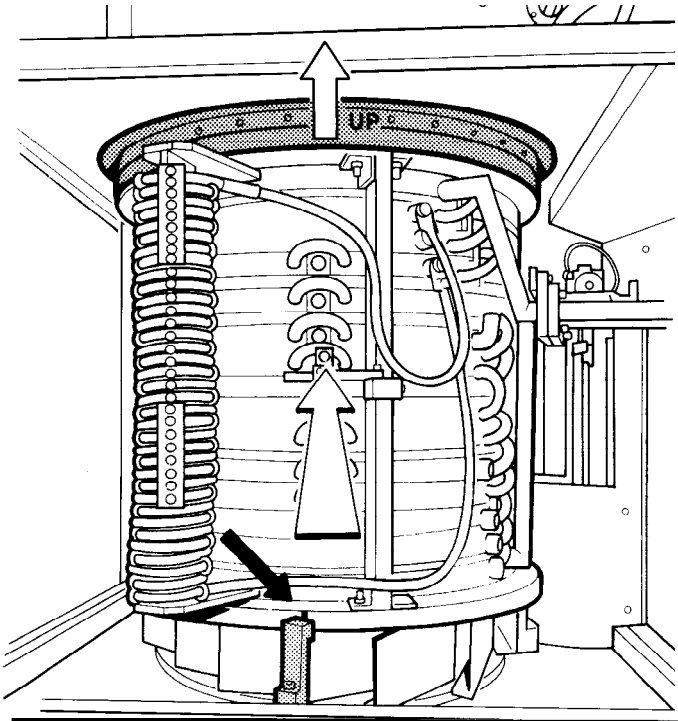

(a2) Re-locate the Teflon ring securing the induction coil.

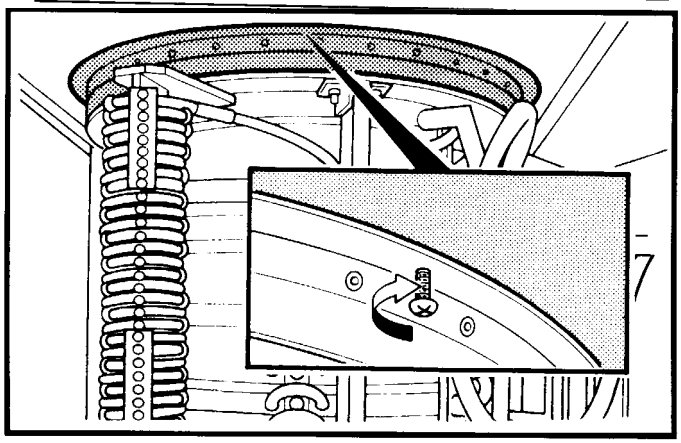

(a3) Tighten the external support securing screws and re-install the eccentric in position, making it adhere to the lower ring of the induction coil.

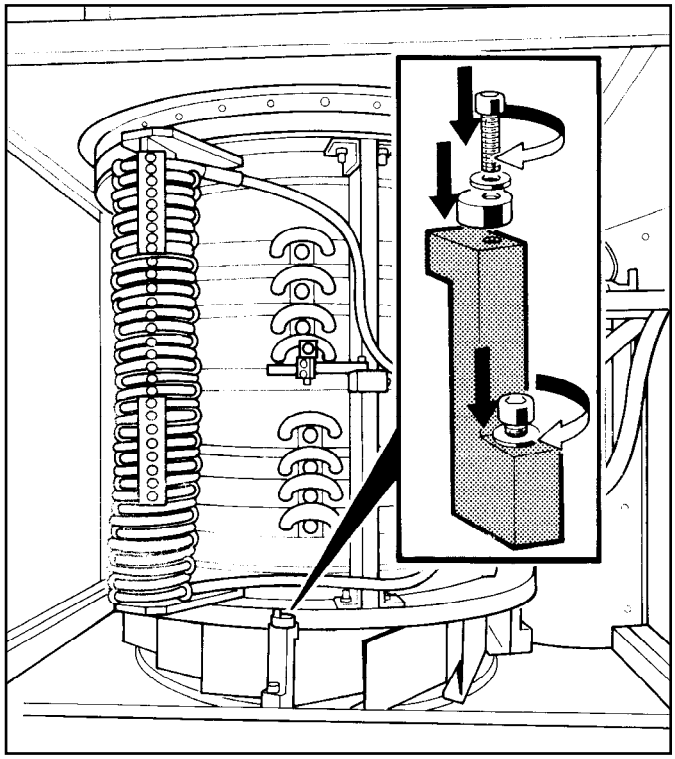

(N-1).7 Induction coil calibration

Repeat the **TEMPERATURE PROFILE CHECK** as seen at chap. 18 **"Temperature calibration"**.

(N-1).8 Suggestions

Put the pyrometer back in its original position.
See N-25 procedure.

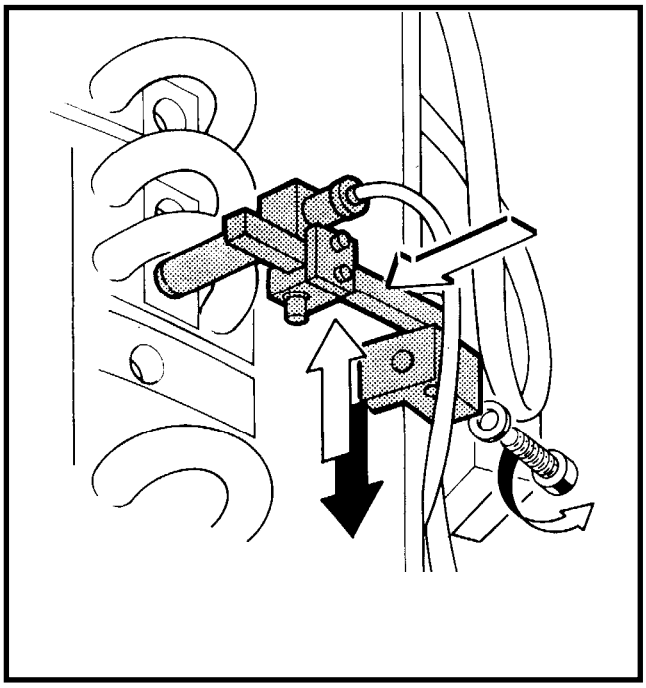

(N-24) PYROMETER TRANSDUCER

(N-24).1 Electric connections: see the "Schematic Wiring Machine Manual" comp. AP1912N E for station A and AP1915N for station B

The pyrometer transducer converts the infrared signal coming from the hot susceptor in an electric signal.
The electric signal is then amplified by means of the amplifier on the **Y- 4** board (see for more reference the "Schematic Wiring Machine" Manual, comp. AP195F).
The amplified signal goes to the TVM 751/3 and then is converted into temperature by the software.

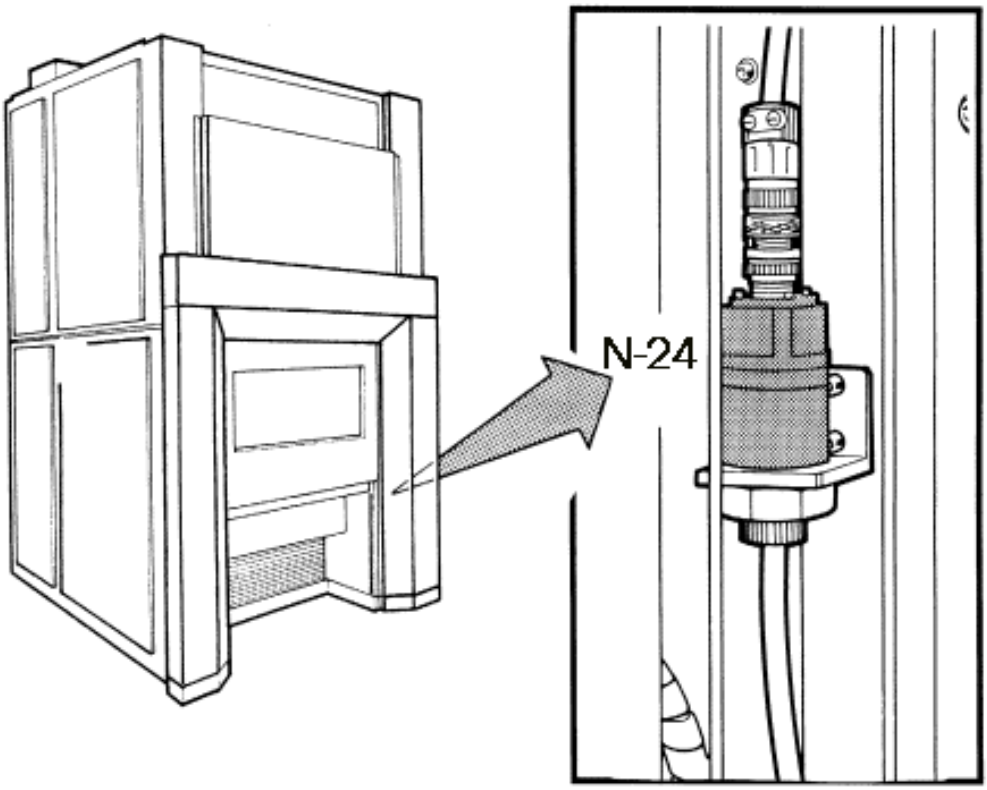

(N-25) FOCUSER HOLDER KIT

(N-25).1 Assembly and setting

(a) Screw in optical fiber tip (**I**) in focuser (**II**) for **28 mm.**

(b) Assemble the focuser holder without tightening nuts and screws (adjustable joints must be loose).

(c) Secure the focuser holder to induction coil support through screw (**III**).

(d) Slip focuser (**II**) fully in block (**IV**) (do not allow space between threaded ring (**V**) and block (**IV**).

(e) Tighten groub screw (**VI**).

(f) Fit teflon sheath (**VI**) on focuser (**II**) until sheath (**VII**) pushes block (**IV**) (do not allow space between sheath (**VII**) and block (**IV**).

(g) Use loose adjustable joints to position sheath (**VII**) against quartz window sheath (**VII**) must touch quartz window and must be perpendicular to it. Do not allow space between sheath (**VII**) and quartz window.

(h) Tighten all adjustable joints to secure position.

Note: If the optical fiber has been replaced, reset the temperature (consult chapter 18 **"Temperature calibration"**).

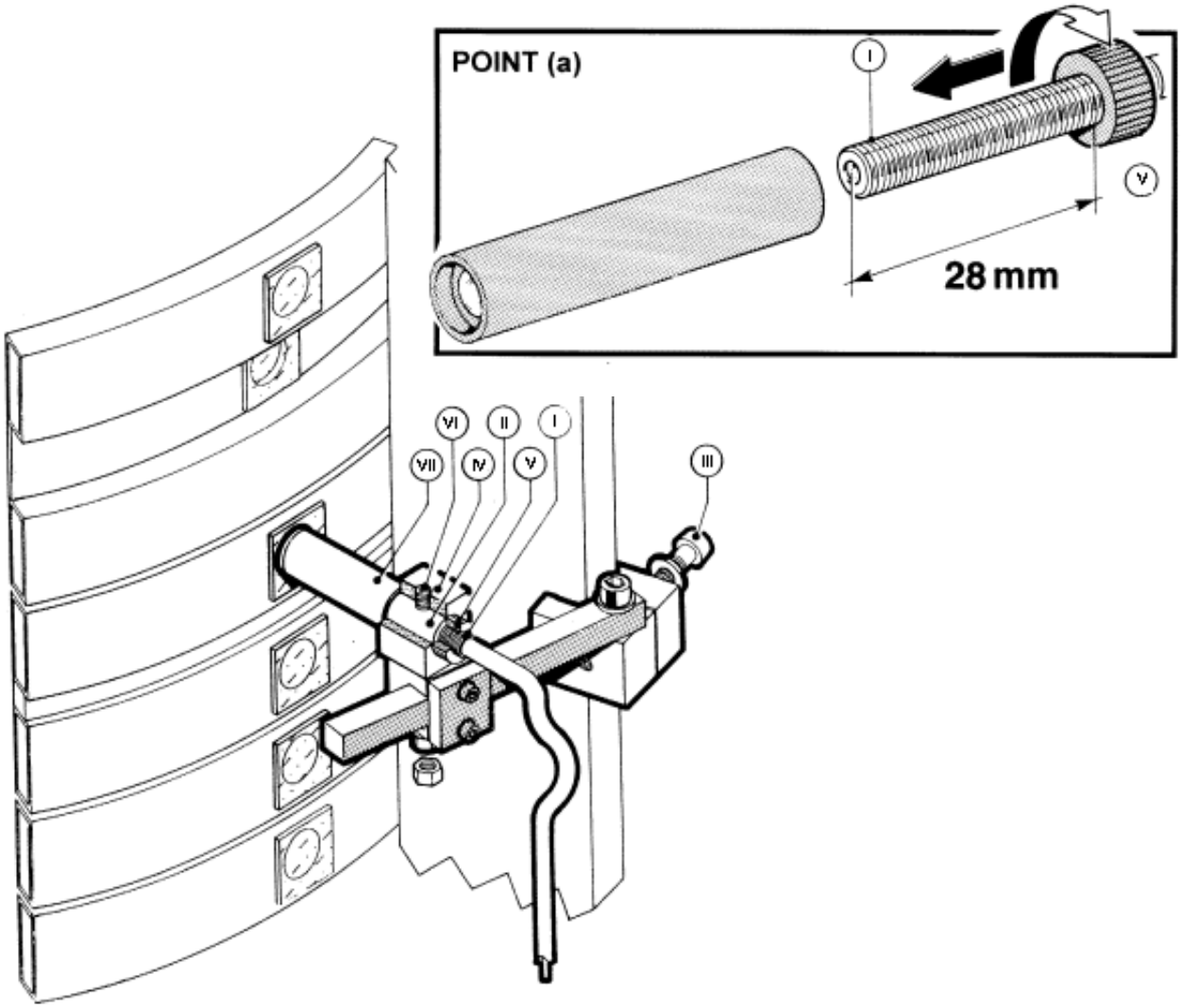

(P-0) GAS METERING

Before proceeding to any cleaning or maintenance, return to the MAIN MENU and select the GAS PANEL page.

(P-0).1 Special equipment needed for this item :

CAUTION In consideration of the gases used by reactors (PH3-AsH3-B2H6-SiCl4-SiCl3-SiH2Cl3-SiH2Cl2-HCl) you must use protective masks with a specific filter protecting against chlorine and hydrochloric acid (Type B filter cartridge) and a self breathing set.

- Portable hydrogen detector
- Portable HCl detector
- Small vacuum cleaner

(P-0).2 Special tools needed for this item :

- Wrench tool set / hexagonal keys (metric wrench)

(P-0).3 Controls :

Gas lines inlet pressure check (see troubleshooting reference table)

(P-0).4 Scheduled maintenance (PM) :

Every 4 weeks:
Clean the gas metering

Clean the gas metering cabinet with a small vacuum cleaner and check that there are not acid leak.

(P-0).5 Long term maintenance :

None

(P-0).6 Replacing flowmeters and their valves and filters

CAUTION

a) Follow the safety rules for dealing with hazardous , toxic and corrosive gases
b) Before to operate on gas metering:
- Purge the HCl, Dope and Source lines
- Remove the pressure to H_2 lines.

(P-0).6.1 FC1 (H_2 MAIN) FC2 (H_2 PURGE)

(a) Close the relevant inlet manual valve **HV1**

(b) With the **GAS PANEL** page bring the line pressure down to atmospheric pressure (check that the pressure gauge registers "0") acting on the **HYDROGEN A** command.

(c) Wait for about 15".

(d) Close the **HYDROGEN A or B** acting on the **N_2A** (or **N_2B**) **ON** command.

(e) Unscrew and remove the electrical connector.

(f) With an inch setscrew wrench unscrew the rear clamp screws.

(g) Replace the flowmeter.

(h) Re-place the screws without tightening.

(i) Replace the **VCR GASKETS**.

(j) Tighten the **VCR GAS** connections.

(k) Re-insert the electrical connector.

(l) Open the inlet manual valve **HV1** and check the pressure on manometer **PR1**

(m) Re-close the manual valve **HV1**.

(n) Perform a leak test with a portable hydrogen detector.

(o) In case of leaks go back to (**e**).

(p) Purge the gas line for 20 minutes.

Note: Follow the same procedure to replace valves **V3**, **V4**, **V7**, **V8**, **V5** and **V6** of filter **F1** and of pressure reducer **PR0-PR1**.
The valves V3÷V8 are guaranteed to thousands operations. It is also recommended, for more safety, to replace the valves each 3 years.

(P-0).6.2 FC3 (N_2) OPERATING PROCEDURE (same as paragraph 6.1)

(a) Close the manual valve **HV3**.

(b) Wait until the appropriate manometer registers "0".

(c) Proceed to the flowmeter replacement (follow points (e) to (k) as in paragraph 6.1)

(d) Replace the VCR GASKETS.

(e) Remember to reset contacts.

(f) Manually re-open the valve HV3.

Note:	Follow the same procedure to replace valves **V7**, **V8**, **V1**, **V13** and **MV12** of filter **F1** and of pressure reducer **PR3**.

(P-0).6.3 FC51 FC52 FC53 (DOPE 1)

(a) Manually close the valve **HV5**.

(b) With the GAS PANEL page open **INJECT 1** in **VENT** to its widest range so as to empty the line as fast as possible.

(c) Open DILUTE 1 to its widest range.

(d) Wait for at least 20 minutes.

(e) Turn the **PR2** pressure reducer knob counterclockwise and wait until the appropriate manometer registers "0".

(f) Wait for 15".

(g) With the GAS PANEL page close **DILUTE 1** and **INJECT 1**.

(h) Replace the flowmeter (follow points **(e)** to **(k)** as in paragraph 6.1)

(i) Replace the **VCR GASKETS**.

(j) Remember to reset contacts.

(k) Bring pressure up again in pressure reducer **PR2** by turning the knob clockwise to starting pressure.

(l) Perform a leak test with a portable hydrogen detector.

(m) In case of leaks repeat procedure starting from **(e)**.

Note	Follow the same procedure to replace valves **V52**, **V53**, **V54** and of the pressure reducer.

Note	To replace pressure reducer **PR2** follow the same procedure as in **FC1** and **FC2**.

(P-0).6.4 FC21

(a) Close the manual valves **VB1** and **VB2** of the bubbler and open the manual valve **VB4**.

(b) With the **GAS PANEL** page, open **SOURCE 1 in VENT** and let it all purge for 30'.

(c) Close **SOURCE 1**.

(d) Replace the flowmeter (follow points **(e)** to **(k)** as in paragraph 6.1).

(e) Replace the **VCR GASKET**.

(f) Remember to reset contacts.

(g) Bring pressure up again in pressure regulator **PR4**.

(h) Open **SOURCE 1 in VENT** for **10''**.

(i) Close **SOURCE 1**.

(j) Perform a leak test with a portable hydrogen detector.

(k) In case the test has given satisfactory results, proceed with point (**q**).

(l) In case of leaks go back to (**d**) by opening **SOURCE 1** for **1'**, and check that the pressure value is "0". Then close **SOURCE 1**.

(m) Open **SOURCE 1 in VENT** for about **20'**.

(n) Close **SOURCE 1**.

(o) Close the manual valve **VB4** on the **BUBBLER** and open valves **VB1** and **VB2**.

(p) Re-open **SOURCE 1 in**

(q) If so, let it all purge for **10'**.

(r) If not, repeat the procedure from the start **(a)**.

Note: Follow the same procedure to replace valves **V22, V23** and **MV2**.

(P-0).6.5 FC80/FC83 (HCl)

(a) Close the manual valve **HV8**.

(b) With the **GAS PANEL** page open the **HCl in VENT** and check that the manometer registers **"0".**

(c) Re-close the **HCl**.

(d) At this point, emptying the main line (Ex.: BUNKER GAS towards REACTOR) and feeding it with nonreactive GAS (Ex.: N_2, H_2, ARGON). is the customer's responsibility.

(e) Once this operation is done, open the manual valve **HV8** and purge the system for about 30'.

(f) Then close the manual valve **HV8**.

(g) Open the **HCl in VENT** (select command on the **GAS PANEL** page) and check that the manometer registers **"0"**.

(h) Re-close the **HCl**.

(i) Replace the **VCR** gasket.

(j) Remember to reset contacts.

(k) Perform a leak test with a portable hydrogen detector when inert gas H2 is used.

(l) When inert gas ARGON or N_2 is used, raise pressure in the system and wait for about 2 hours.

(m) In case of leaks restart from **(G)**.

(n) Should the test give a negative result, open the **HCl in VENT** for 15' - through the GAS PANEL page – and purge with **ARGON, N_2 or H_2**.

(o) Re-close the **HCl** by acting on the appropriate command in the GAS PANEL page.

(p) Close the **HV8**.

(q) Let acid into the system (the customer is responsible for this operation).

(r) Re-open the manual valve **HV8.**

(s) On the **GAS PANEL** page, open the **HCl in VENT** to its highest value for 10'.

(t) In case of leaks repeat the procedure starting from (**a**).

Note: Follow the same procedure to replace valves **V81** - **V82** - **V83** and **MV8,** and pressure reducer **PR**.

(P-0).7 GAS METERING REASSEMBLE

None

(P-HS) GAS PANEL HYDROGEN SENSOR

(P-HS).1 Electric connections: see “Schematic Wiring Machine” Manual comp.

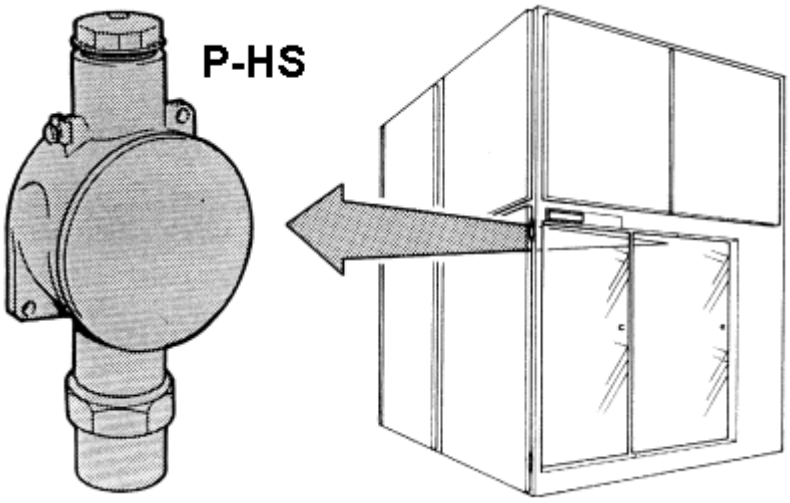

(P-HS).2 Procedure C3 (Zero and full scale setting of H2 LEAK DETECTOR WARNING/ALARM 1/2)

There are three different kinds of Hydrogen Sensor used in LPE PE2061 S reactors. All the models are equivalent but differs in the regulation details. Please refer to the corresponding **MP0/LIE** or **MP1** Manual provided with the machine for more information.

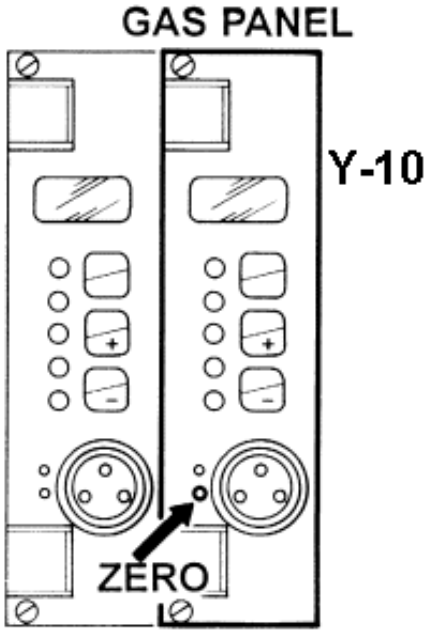

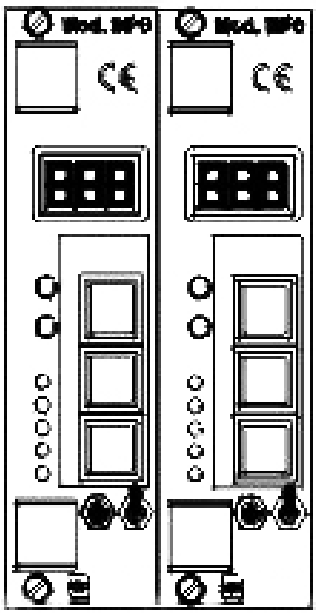

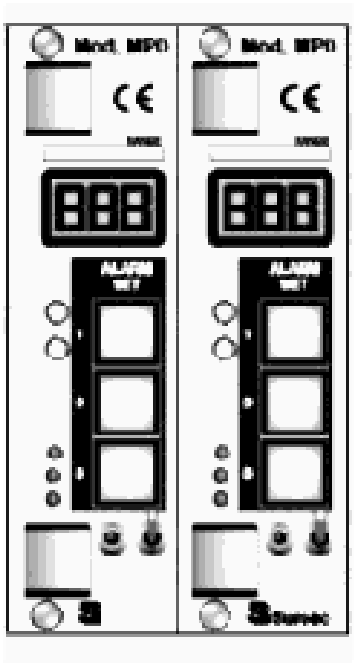

The instrument must indicate **ZERO** in the presence of clean air, and 100 or other value in regard to full scale.

Two methods are possible, depending on the model provided, both for zero and full scale settings:

a. **approximate trimmers (analog circuit)**
b. **push-buttons (digital circuit)**

The trimmer adjusts from a starting to a finishing point

depending on the number of revs. (**20**) permitted by the trimmer design. Push-button adjustment is controlled by the card's software. Control start and finishing positions are defined, within the card's work ambient, by the numbers illustrated here and visible on the card by following the relevant instructions. For zero setting, the adjustment range is **-10** to **+10**.
Adjustment range for LEL version:
starting point -5 (the cards are delivered with this OFFSET value); **minimum value -10; maximum value +5. In addition to these values, zero must be set with the zero trimmer.**

FULL SCALE SETTING (minimum value 10; maximum value 200).
The instruments are normally supplied with the SPAN value set at approx. 110. When this value reaches 200, maximum threshold has been reached and the push-button is of no further use. If you wish to further increase the value shown on the display, use the SPAN trimmer.

SETTING VALUES

WARNING	=	10% LEL (LOWER EXPLOSIVE LEVEL)
ALARM	=	20% LEL (LOWER EXPLOSIVE LEVEL)

NOTE: for particular information about **MP0/LIE** and **MP1** installation and setting, see the enclosure **MP0/LIE** and **MP1** manual.

(Q-6) BLOWER V BELT CHECK

Before proceeding to any cleaning or maintenance, return to the MAIN MENU and select the REACTOR MAINTENANCE command.
This command is available only if the safety requirements are met (see the Operator manual).

(Q-6).1 Special equipment needed for this item :

- Safety ladder
- It's recommended the presence of two maintenance engineers

(Q-6).2 Special tools needed for this item :

- Belt stretcher.

(Q-6).3 Controls :

- Check the belt tension
- Replace the belt in case of visual damages.

(Q-6).4 Scheduled maintenance (PM) :

(Q-6).4-1 Check (every 12 weeks)

CAUTION

(a) For maintenance operations in this area, bring the machine to power level "0", clear the fan, lock the reactor main switch and remove the key.

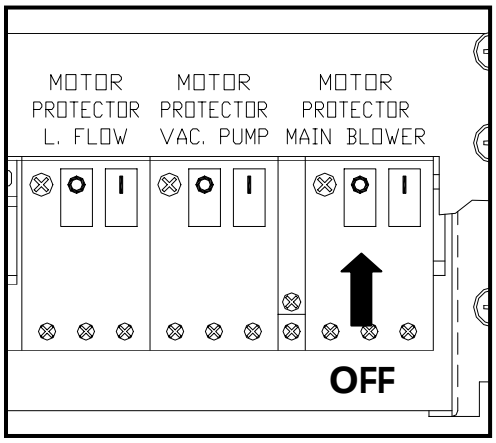

(b) Remove the reactor rear panels.

CAUTION Although the condensers have been disconnected while removing the rear panels, the unutilized connection points may remain charged for a given amount of time.

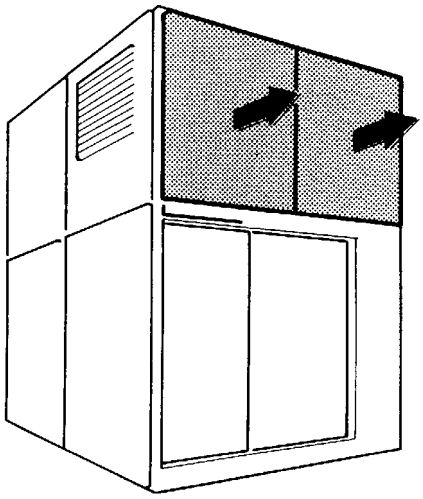

(c) Check the alignment between the two pulleys.

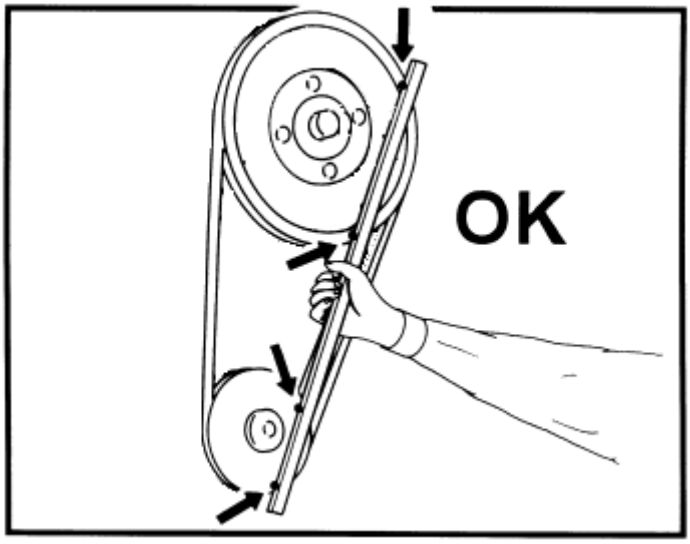

(d) Check the correct stretch the belt. Pushing the belt between the two pulleys with a applied force (approx. **10 Kg**), the bend will be around **10mm**

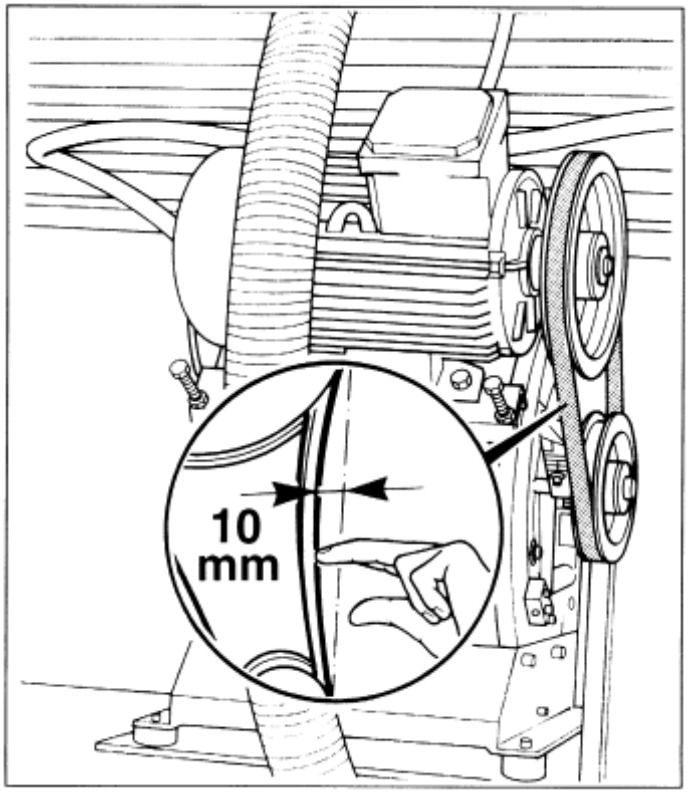

(Q-6).4-2 Tensioning

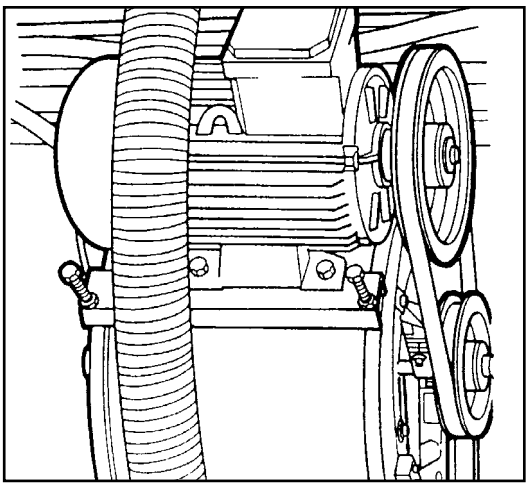

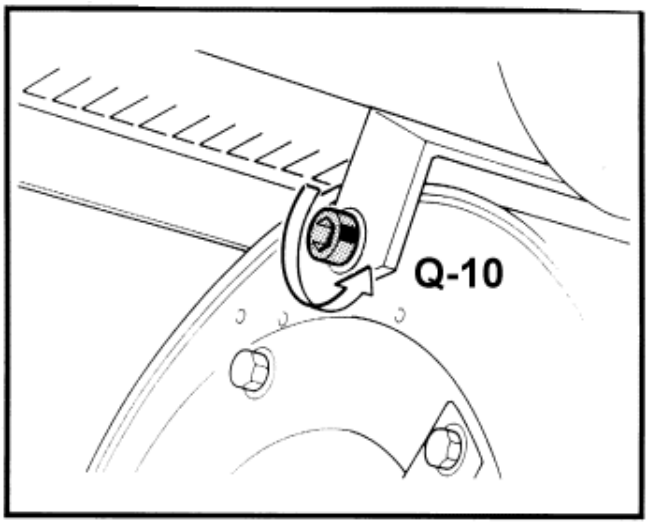

(a) Loosen the two side support screws **(Q-10)**.

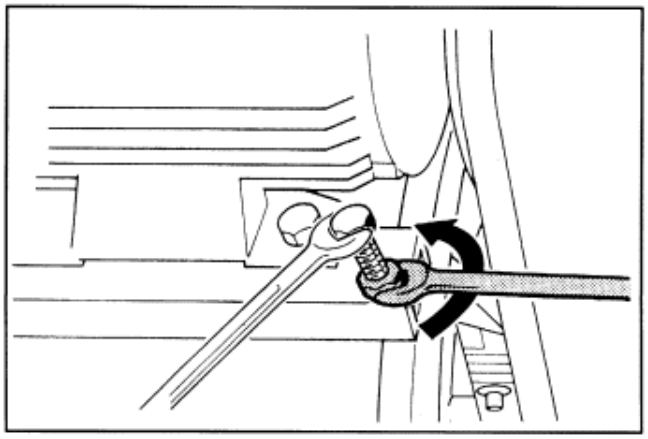

(b) Loosen the right stop nut.

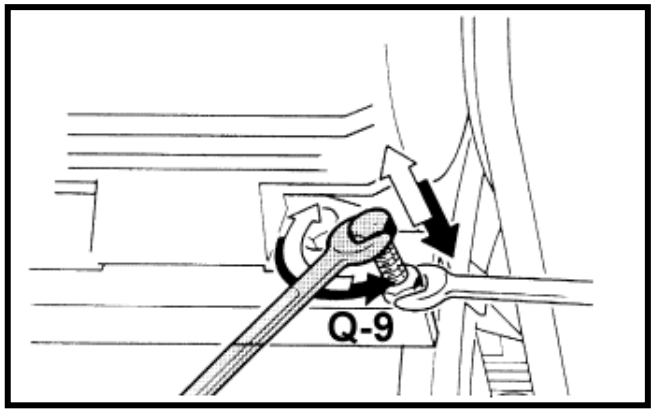

(c) Operate the right screw **(Q-9)** to adjust tension.

⚠ **CAUTION** In this cases check the alignment between the pulleys.

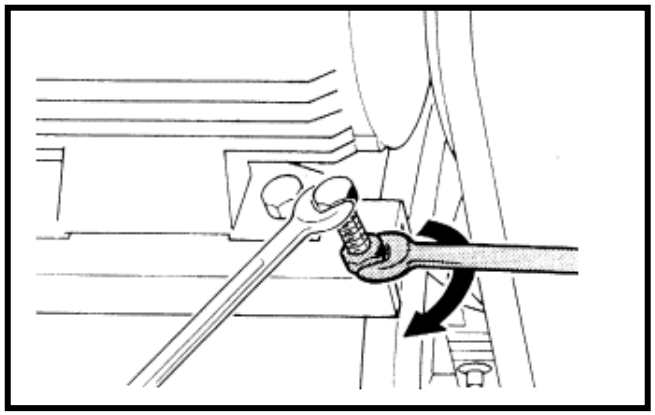

(d) Tighten the right nut again.

(e) Tighten the screws of the support **(Q-10)**.

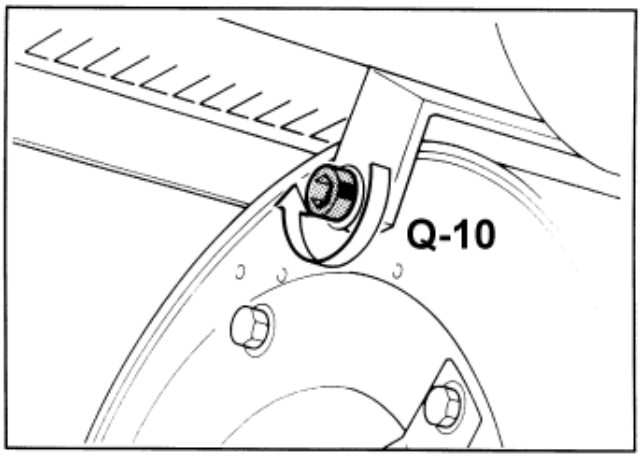

(Q-6).4-3 Replacement (every 24 weeks)

(a) Loosen the two side support screws **(Q-10)**.

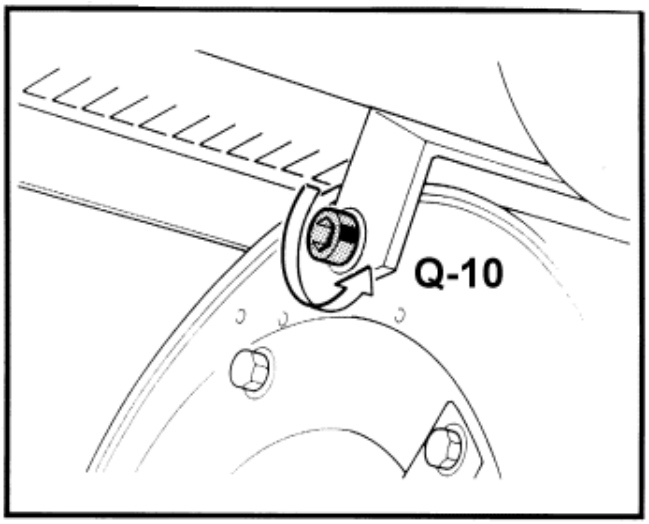

(b) Loosen the two nuts and the two tensioning screws **(Q-10)**, so as to free the pulley belt.

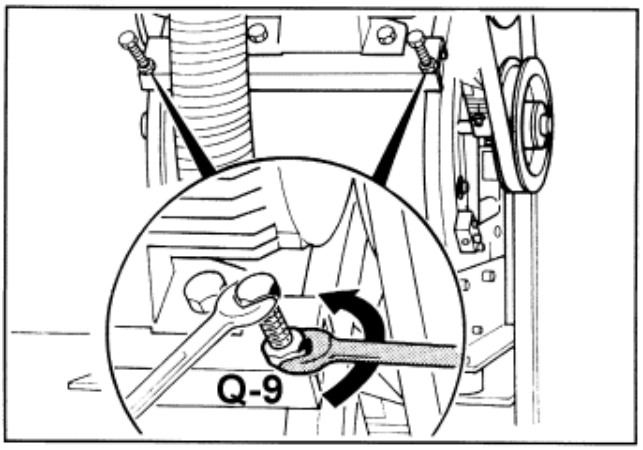

(c) Replace the belt **(Q-6)**.

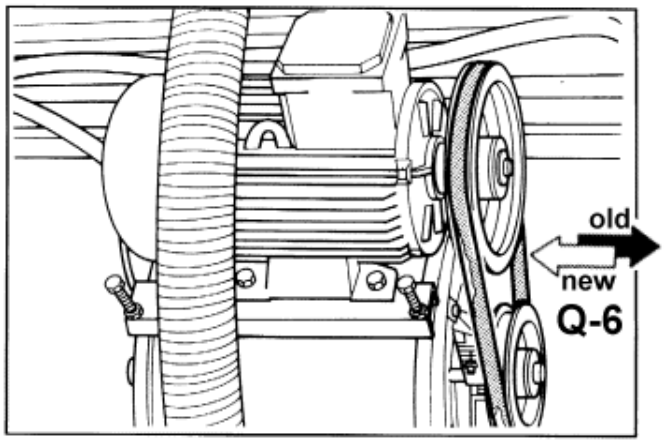

(d) Screw the two tensioning screws **(Q-9)**. Do not push hard.

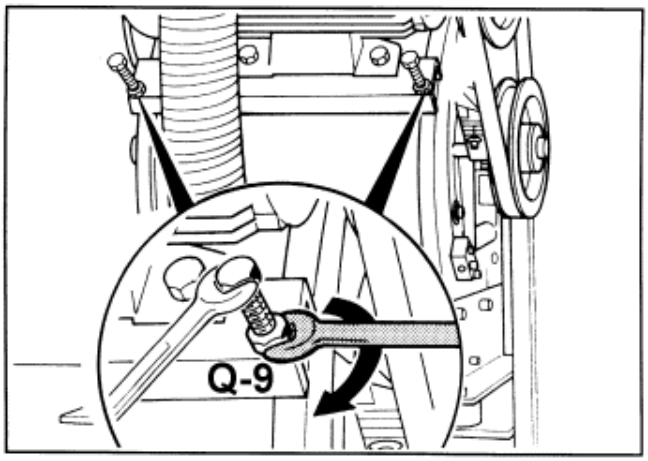

(e) Operate on the right screw to adjust tension.

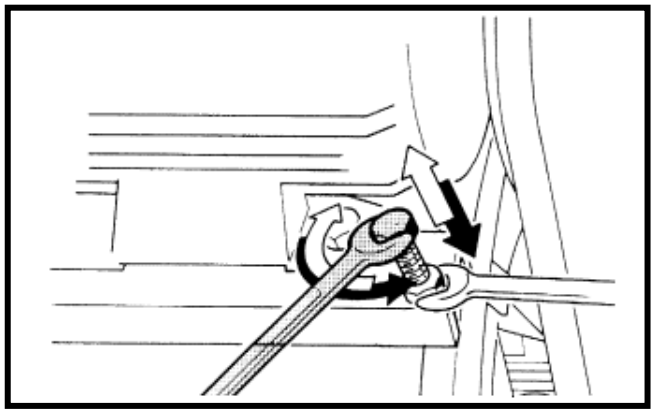

(f) Tighten both nuts.

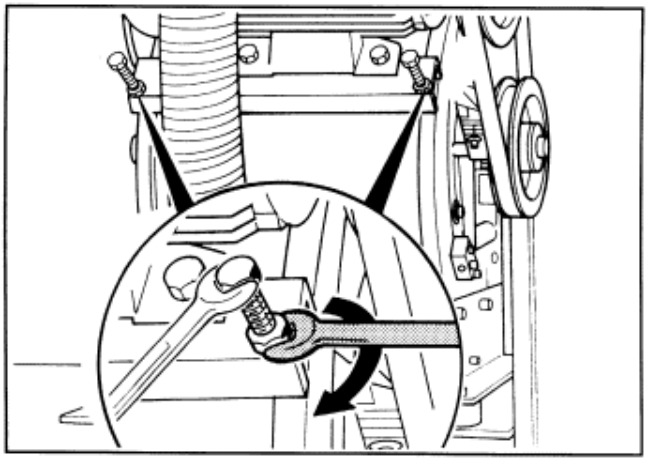

(g) Tighten the two screws of the support **(Q-10)**.

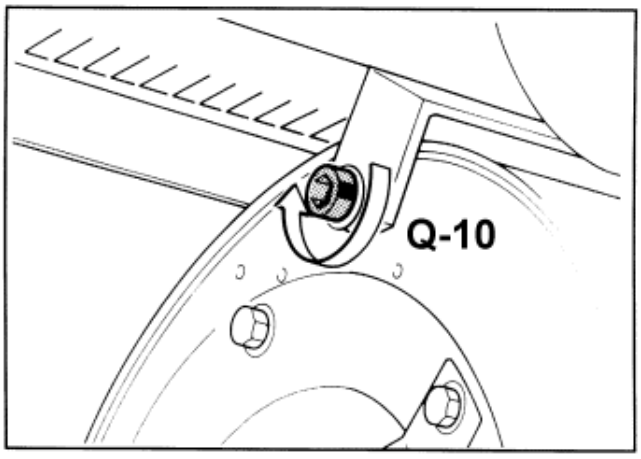

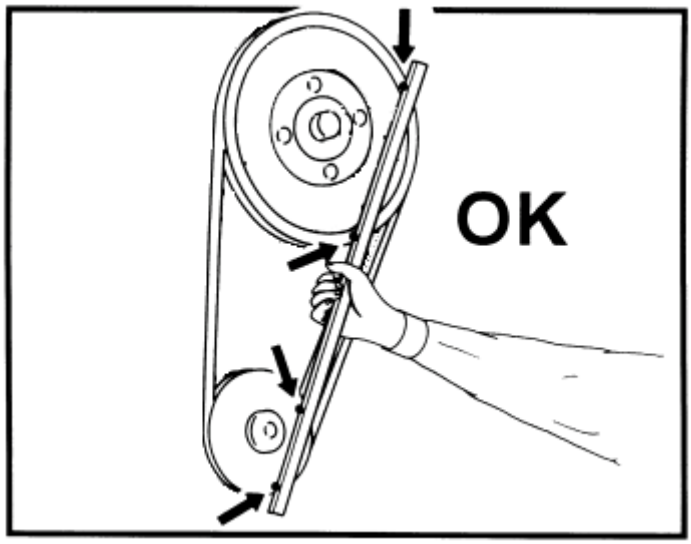

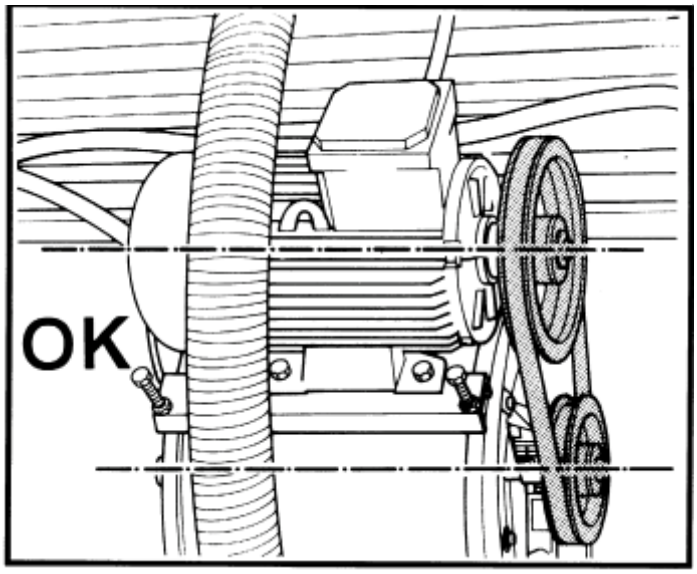

⚠ **CAUTION** In both cases check both alignment between the pulleys and the axis between motor pulley and fan pulley.

(h) Close the reactor rear panel.

(i) Switch the blower on.

(Q-6).5 Long term maintenance :

None

(Q-6).6 Belt removal

See PM

(Q-6).7 Belt reassemble

See PM

(Q-6).8 Belt calibration

See PM

(Q-6).9 Suggestions

None

(Q-12) COOLING AIR THERMAL SWITCH

Set Point : **35~40 °C**
Electric connections: see "Schematic Wiring Machine" Manual comp. SQ399H
The cooling air thermal switch ensures that no overheating of the reactor occurs.
The "thermal sw. air" alarm message is released when the temperature inside the reactor exceed 35°- 40° C.
The process is automatically aborted.

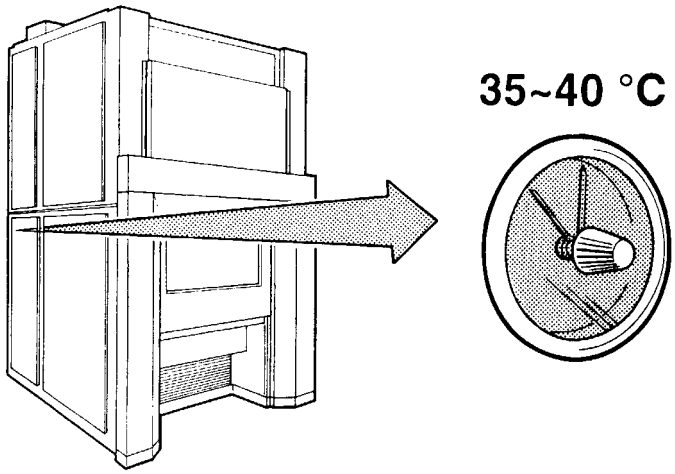

(Q-12).1 Procedure C6 (Cooling air thermal switch)

a. While turning the knob on the instrument (until the RED MARK goes below the BLACK MARK), check if the **RED** indicator light, referring to the **ALARMS** page, illuminates.

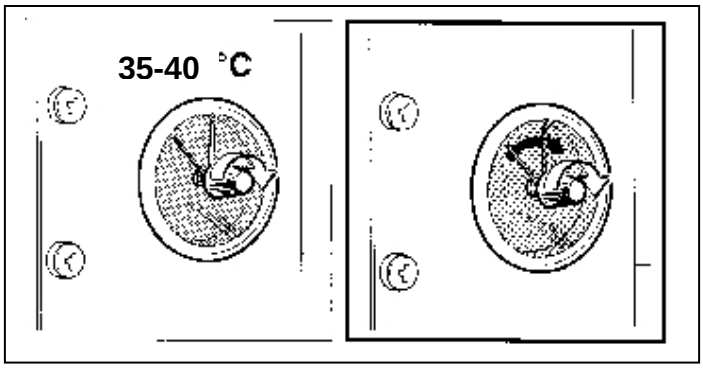

b. Turning the knob, align it up with the RED MARK to **35÷40 °C**.

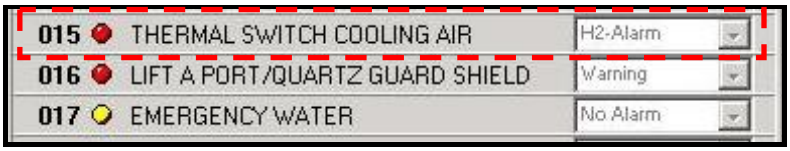

c. If the **LED** does not switch on, consult the **" THERMAL SWITCH AIR "** point, in the **TROUBLESHOOTING** chapter.

(Q-17) LAMINAR FLOW (LF) FILTER

Before proceeding to any cleaning or maintenance, return to the MAIN MENU and select the REACTOR MANAGEMENT command.
This command is available only if the safety requirements are met (see the Operator manual).

(Q-17).1 Special equipment needed for this item :

- Dust particle counter
- Speed meter for air

(Q-17).2 Special tools needed for this item :

None

(Q-17).3 Controls :

(Q-17).3.1 Filter check (every 12 weeks)

(a) Check air velocity with a speed meter for air according to **FEDERAL STANDARD 209D.**

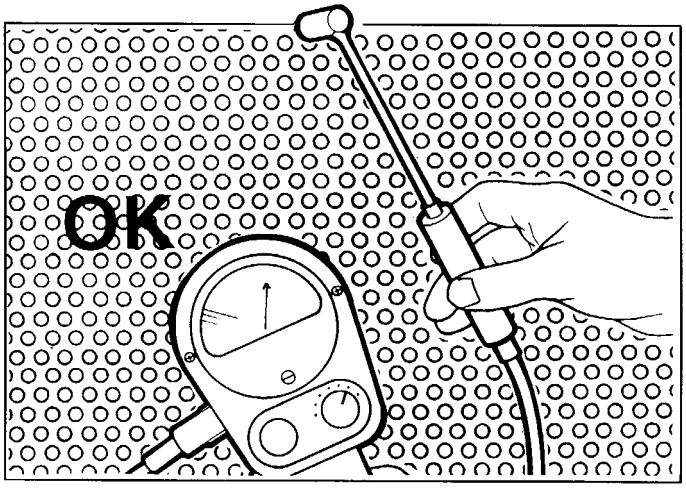

(b) Move the blower speed regulator **(A-25)** clockwise in order to increase the velocity up to 0,4 - 0,45 m / sec.

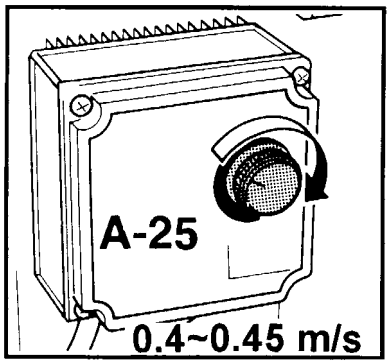

(c) The filter is clogged when the regulator position is fully clockwise but the air velocity is lower than **0,4 - 0,45 m / sec.**
The filter must be replaced to avoid particle contamination on wafers.

(d) Use the dust particle counter to check the particle count , replace the filter if it does not meet class 10 or lover specifications according to **FEDERAL STANDARD 209D**.

(Q-17).4 Scheduled maintenance (PM) :

None

(Q-17).5 Long term maintenance :

1 to 3 years, according to dust accumulation and air speed.

(Q-17).6 Laminar flow filter removal

(a) Remove both lateral sections from station **A/B**.

(b) Tighten the screws on both sides holding the filter.

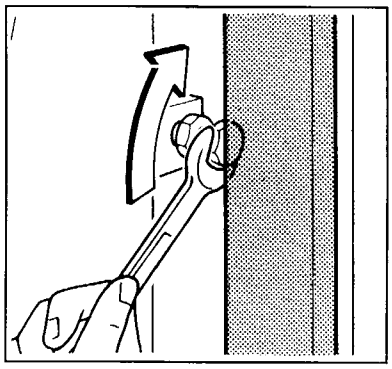

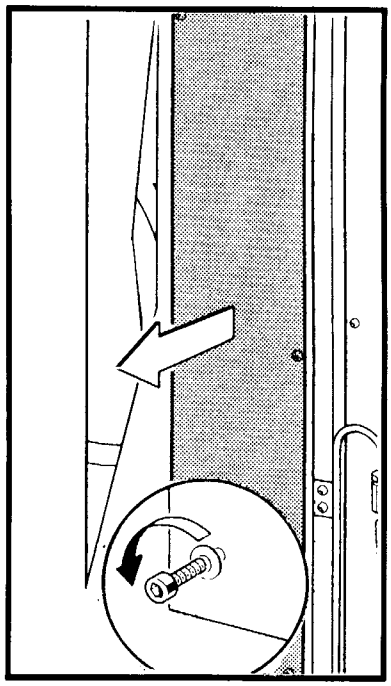

(c) Remove the filter from the easier side.

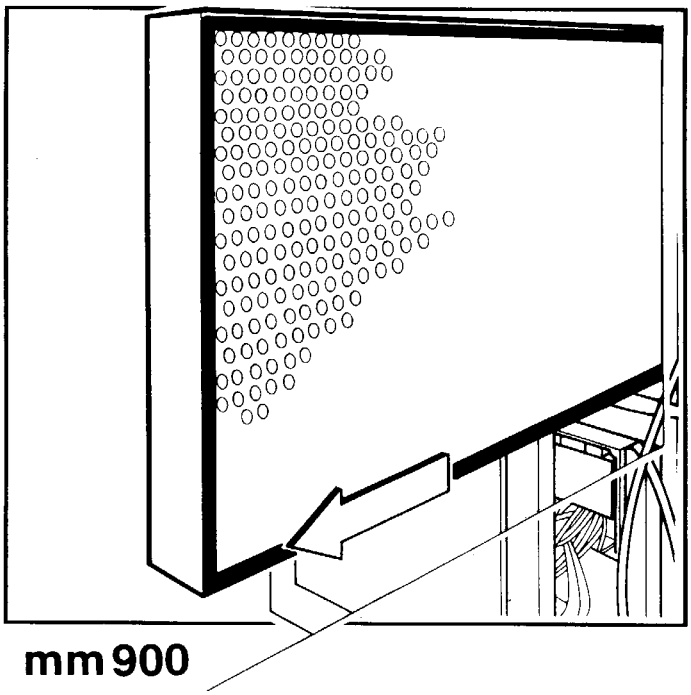

(Q-17).7 Laminar flow filter reassemble

(a) Put a thin film of silicone grease on the downstream gasket of the new filter.

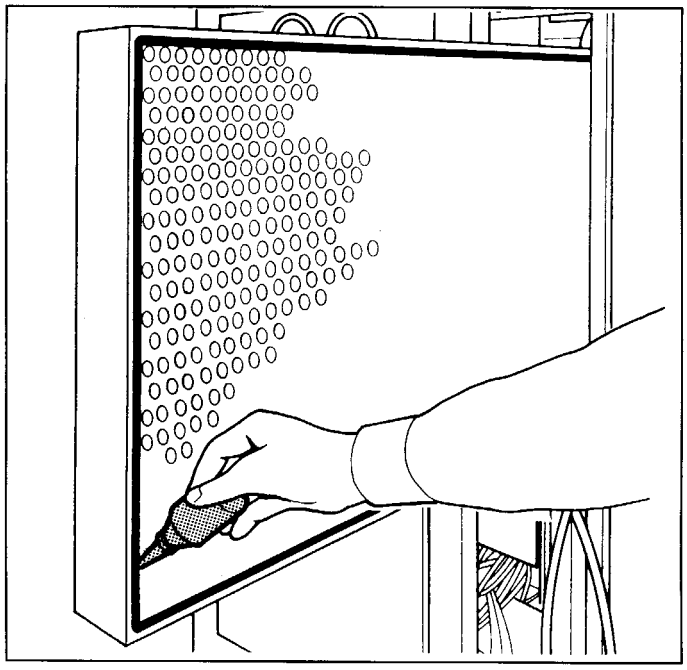

(b) Carefully insert the new filter in the slide.

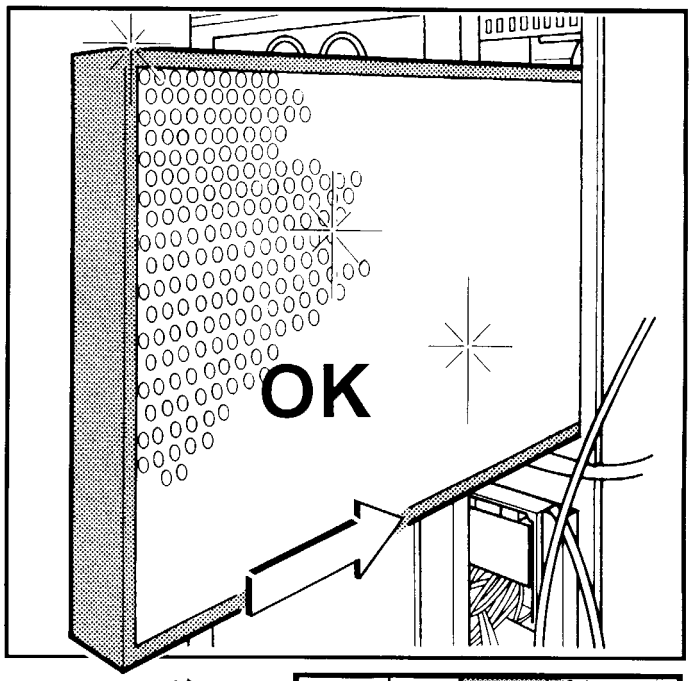

(c) Tighten the bolts and replace the carter.

(d) Start the LF blower and adjust the air velocity at 0,4 - 0,45 m / sec.

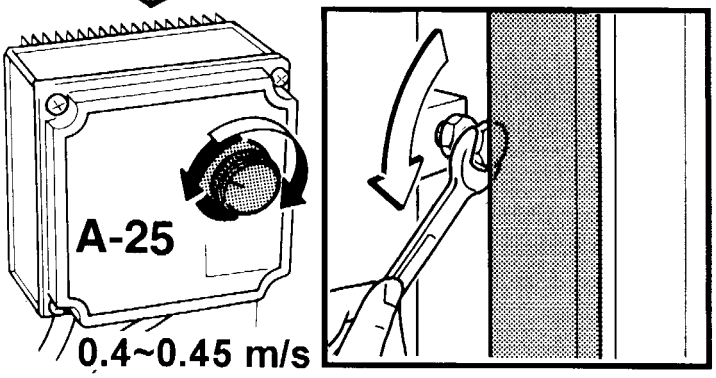

(e) Check for leakages of filter and gasket with a particle monitor according to **FEDERAL STANDARD 209D**, in case of leak tight the bolts again.

(Q-17).8 Laminar flow calibration

(a) Adjust the blower speed regulator **(A-25)** clockwise in order to achieve an air velocity of **0,4 - 0,45 m / sec**.

(b) Perform the particles count

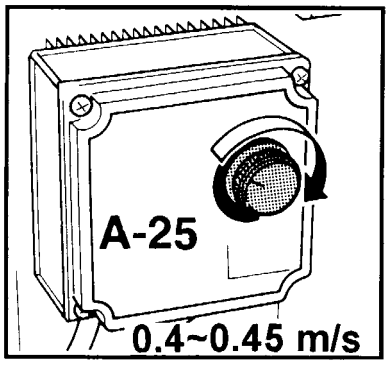

(Q-17).9 Suggestions

None

(Q-27) VACUUM SWITCH AIR EXHAUST

Set Point : **-3 mbar**

(Q-27).1 Electric connections: see "Schematic Wiring Machine" manual

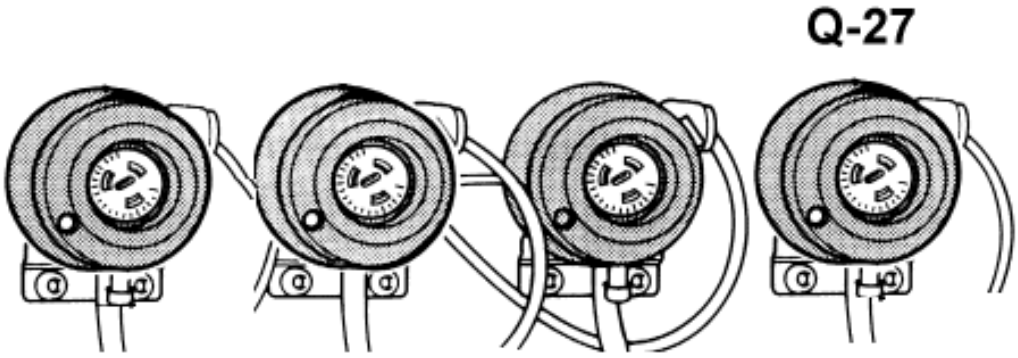

(Q-27).2 Procedure C5 (Exhaust air vacuum switch)

a. Remove the cover and use the scale-reference screw to set to **-3 mbar**.

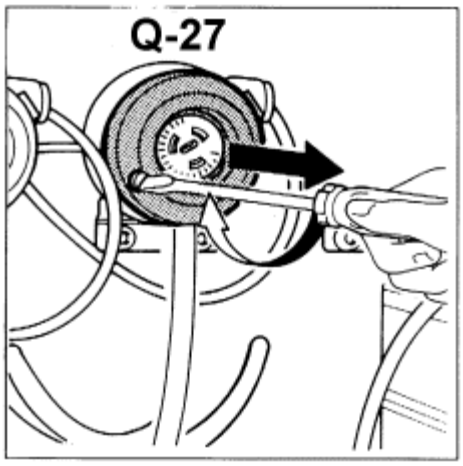

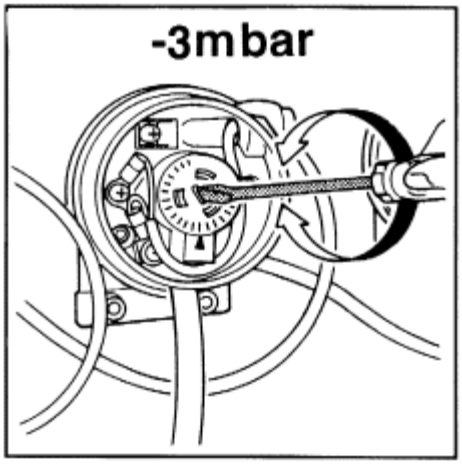

b. Power up the reactor air exhaust fan (customer's responsibility).

c. Switch off the fan and check if the **LED** red lights on the **ALARMS** page (see relevant screen).

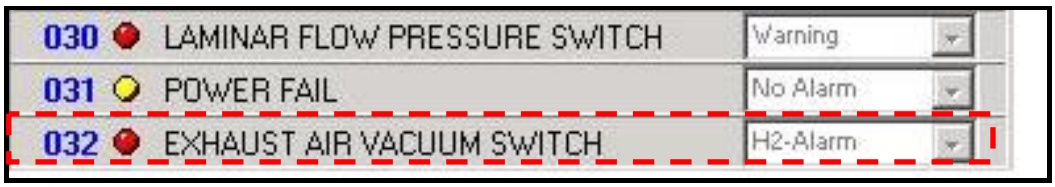

d. If the **LED** does not switch on, consult the "**EXHAUST AIR VACUUM SWITCH**" point, in the **TROUBLESHOOTING** chapter.

Q-28) LAMINAR FLOW PRESSURE SWITCH

Set Point : **+1 mbar**

(Q-28).1 Electric connections: see “Schematic Wiring Machine” manual

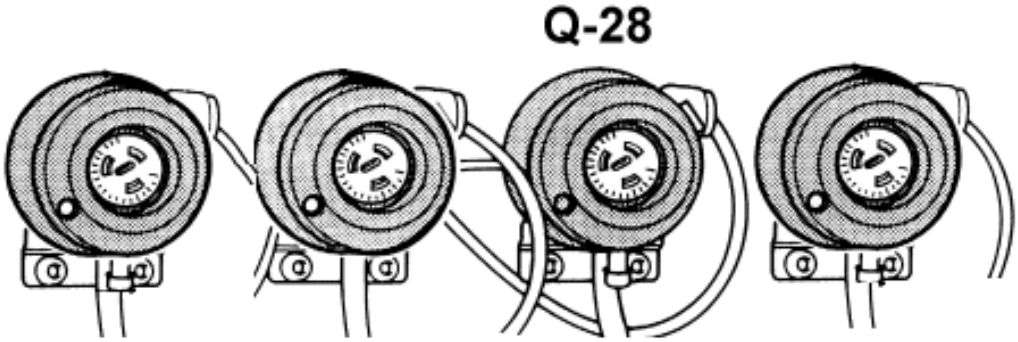

(Q-28).2 Procedure C4 (Laminar flow pressure switch)

a. Remove the cover and use the scale-reference screw to set to **+1 mbar.**

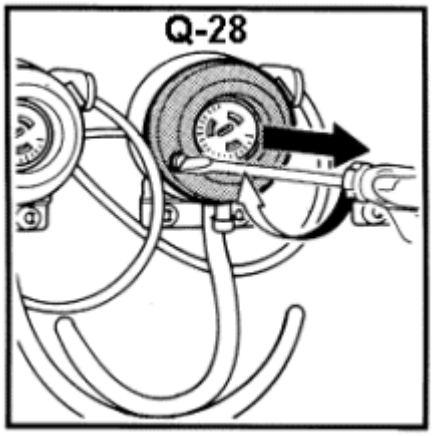

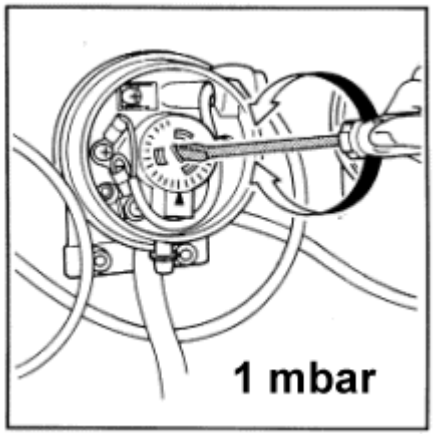

b. Switch on LAMINAR FLOW.

c. Turn the speed control knob (**A25**) halfway.

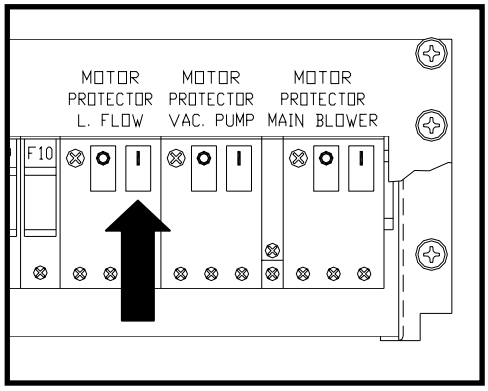

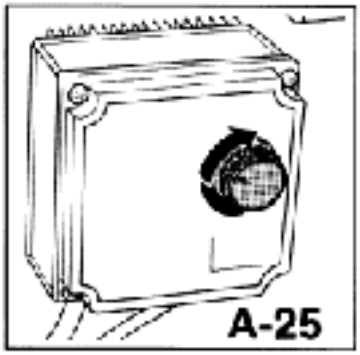

d. Make sure that the **LEDs** corresponding to the **ALARM** page become **GREEN .**

e. If the **LED** does not switch on, consult the “**LAMINAR FLOW**” point, in the **TROUBLESHOOTING** chapter.

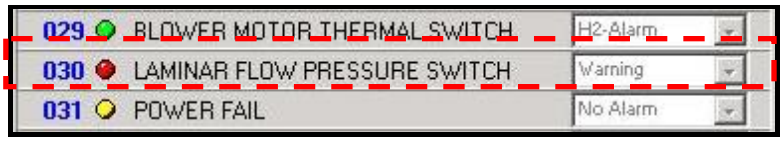

(Q-29) PRESSURE SWITCH SPOILER

(Q-29).1 Electric connections: see “Schematic Wiring Machine” manual

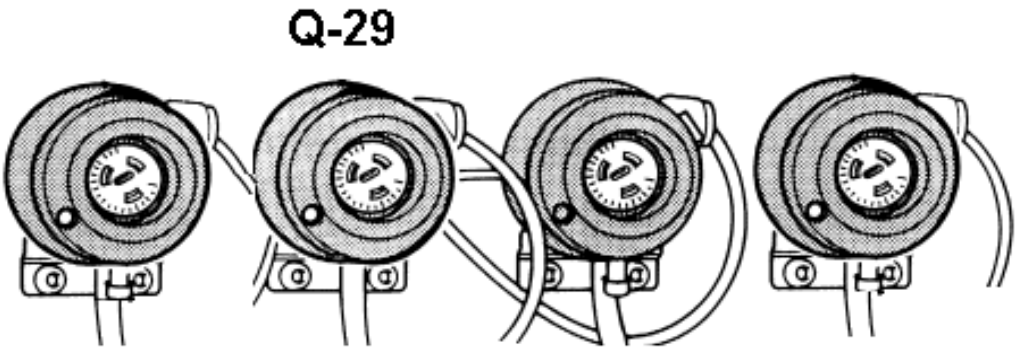

(Q-29).2 Procedure C5 (Pressure sw spoiler)

a. Remove the cover and use the scale-reference screw to set to **+6 mbar**.

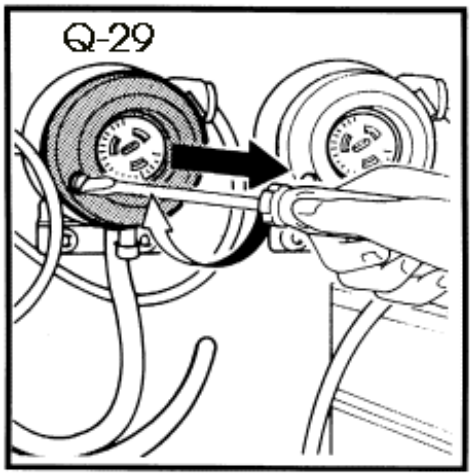

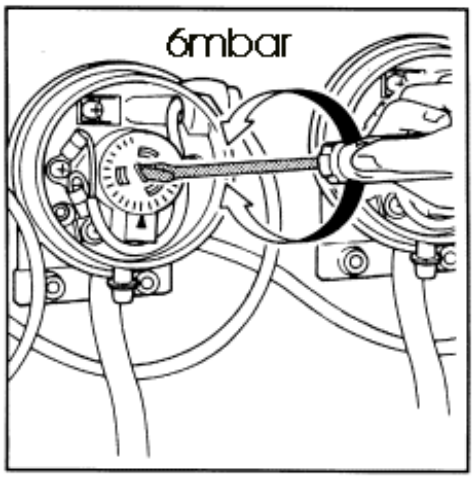

b. Power up the MAIN BLOWER.

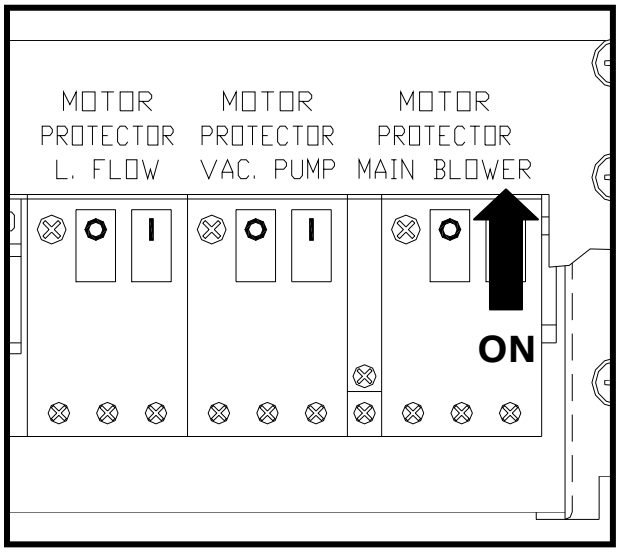

c. Access the Diagnostic Spoiler Test window.

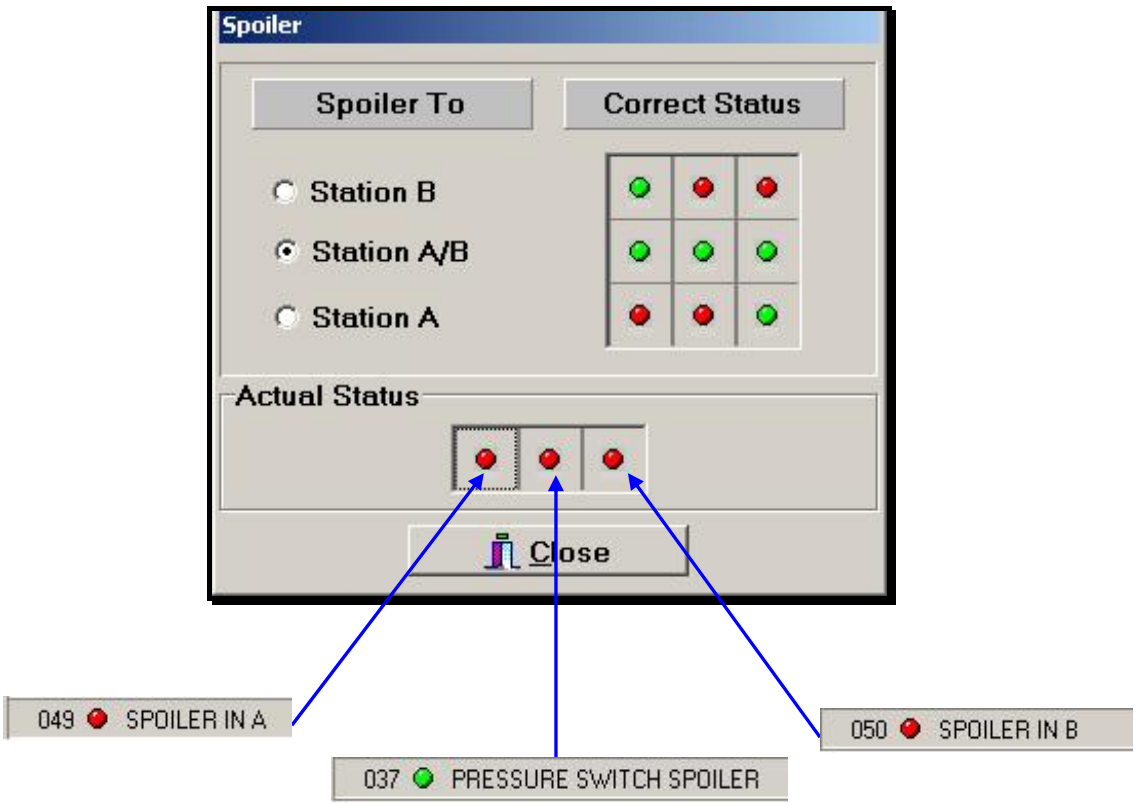

d. Move the **SPOILER** on station **A** by clicking on the Station A check box.

e. Compare the actual status field with the correct status field in order to verify the correct function of the spoiler group.

f. Move the **SPOILER** on station **B** and repeat above check.

g. Repeat the same check for the **SPOILER** in central position.

h. If one or more **LEDs** are inefficient, refer to **"SPOILER TROUBLE**" point, in the **TROUBLESHOOTING** chapter.

(Q-51) LAMINAR FLOW BLOWER

(Q-51).1 Electric connections: see “Schematic Wiring Machine” manual comp. EV01210I

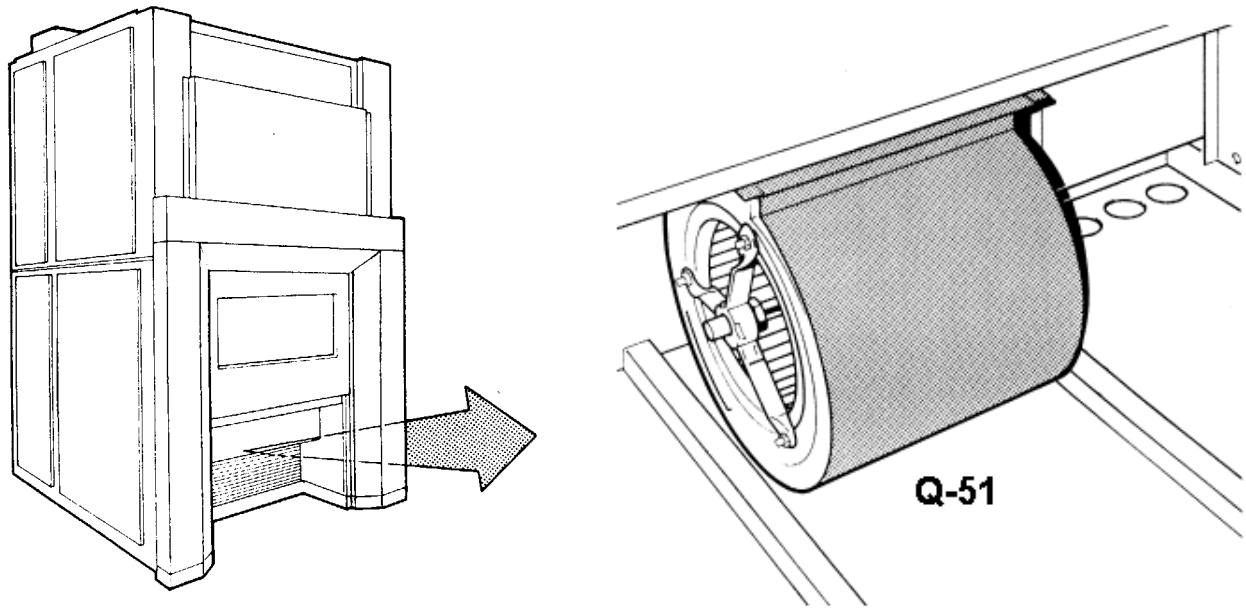

(Q-51).2 Procedure T6 (thermal sw blower motor)

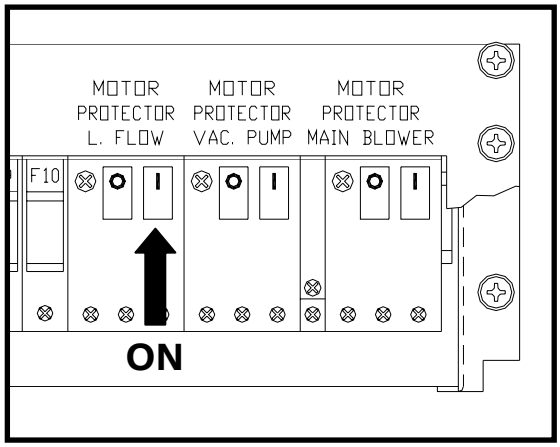

a. Switch on the fan and ensure that the relevant **LED** on the **ALARMS** page becomes **GREEN**.

b. If the **LED** does not switch on, consult the **“LAMINAR FLOW”** point in the **TROUBLE-SHOOTING** chapter.

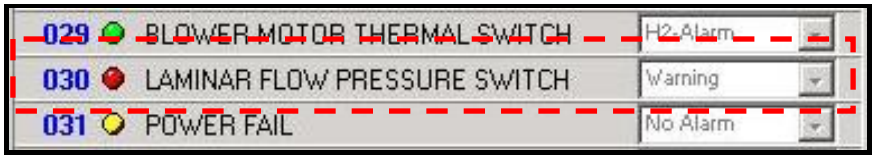

(Q-51).3 Long term maintenance (5 years)

Before proceeding to any cleaning or maintenance, return to the MAIN MENU and select the REACTOR MANAGEMENT command.
This command is available only if the safety requirements are met (see the Operator manual).

(Q-51).4 Special equipment needed for this item :

None

(Q-51).5 Special tools needed for this item :

None

(Q-51).6 Removal :

CAUTION

a. For maintenance operations in this area, bring the machine to power level "0", clear the fan, lock the reactor main switch and remove the key.

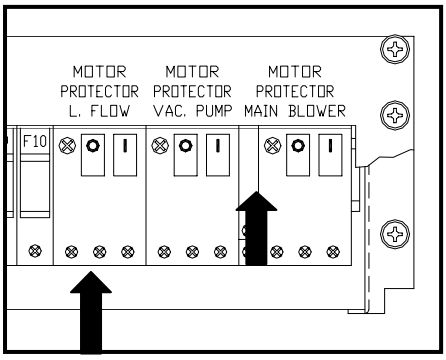

b. Remove the front half-table.

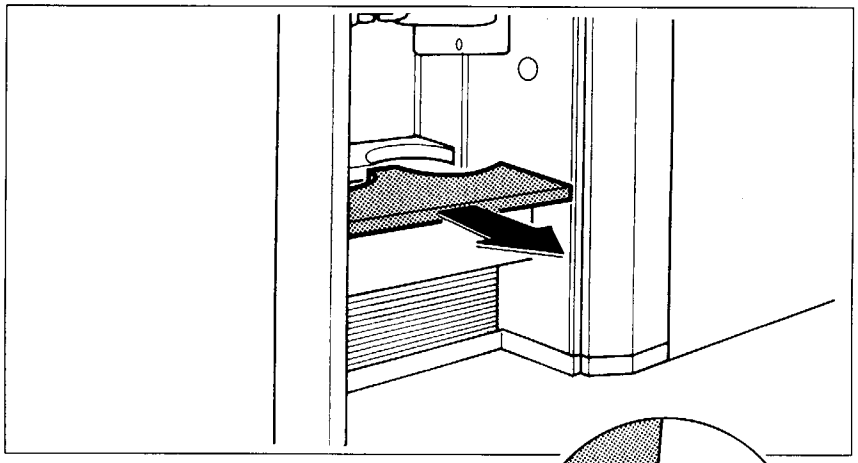

c. Remove cover.

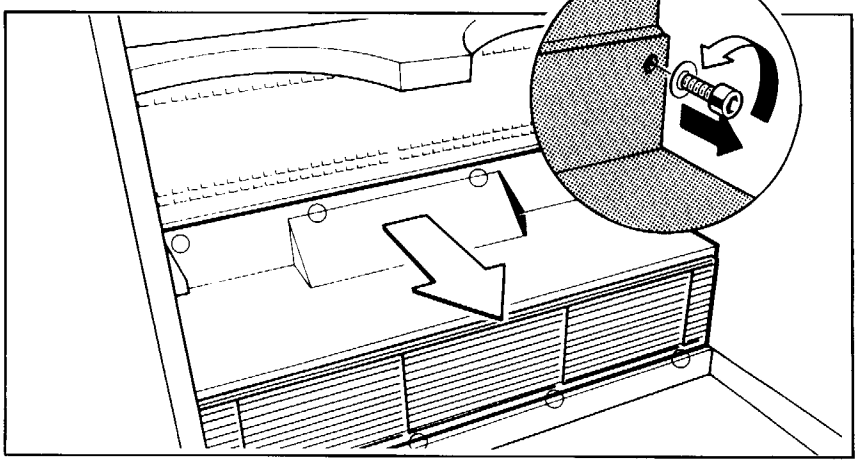

d. Disconnect the electric cables.

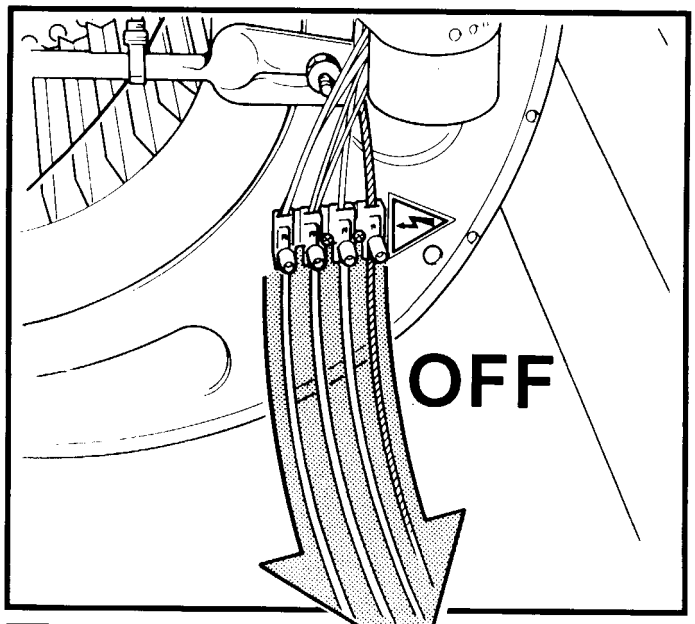

e. Remove the fan and replace it with a new one, reversing the procedure.

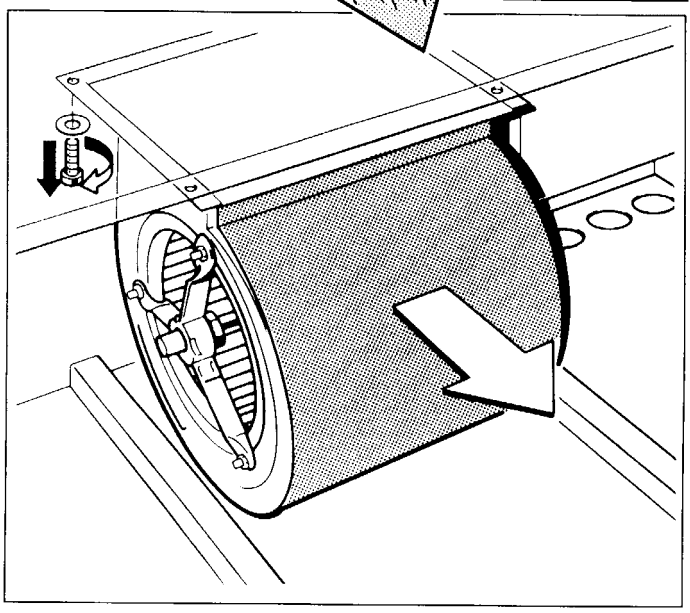

(S-1) SHUTTER PLATE VACUUM SW A and B

CAUTION Before beginning the following maintenance operations, make sure that the quartz-guard is always backed, because in REACTOR MAINTENANCE, the safety photocell of the quartz-guard does not work and there can be interference with quartz-guard during shutter plate movement, with possible damages.

CAUTION THE FOLLOWING PROCEDURE IS TO BE CARRIED OUT ONCE THE SHUTTER-PLATE IS OPEN AND THE BELL-JAR IS UP.

(a) Turn off faucets **MV1**, **MV2**, **MV3** and **MV4**.

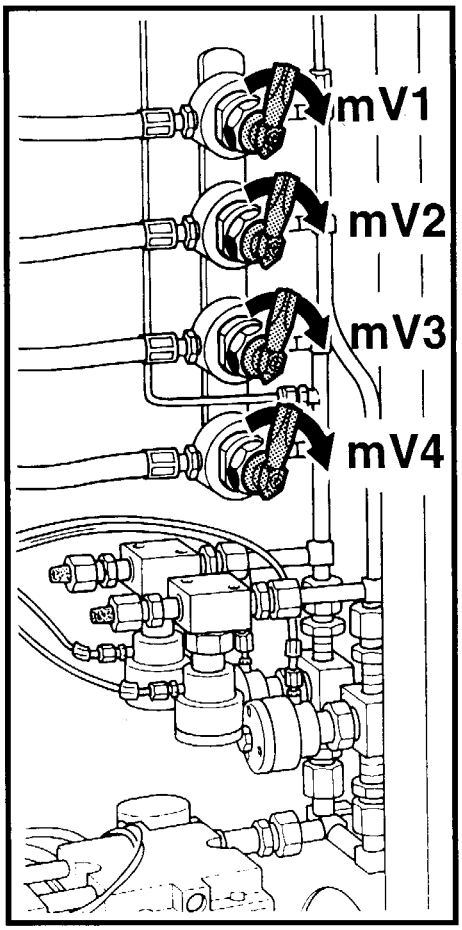

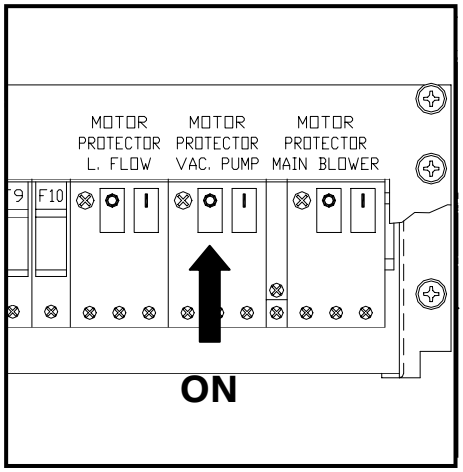

(b) Verify that the vacuum pump thermal switch is on.

(c) Disconnect the connectors placed on valves **VT2** and **VT4**.

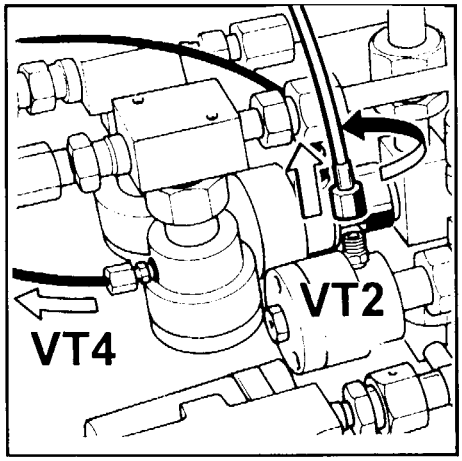

(d) Connect the **VT4** pneumatic T-join to an external compressed air source. Open it and then the pump starts

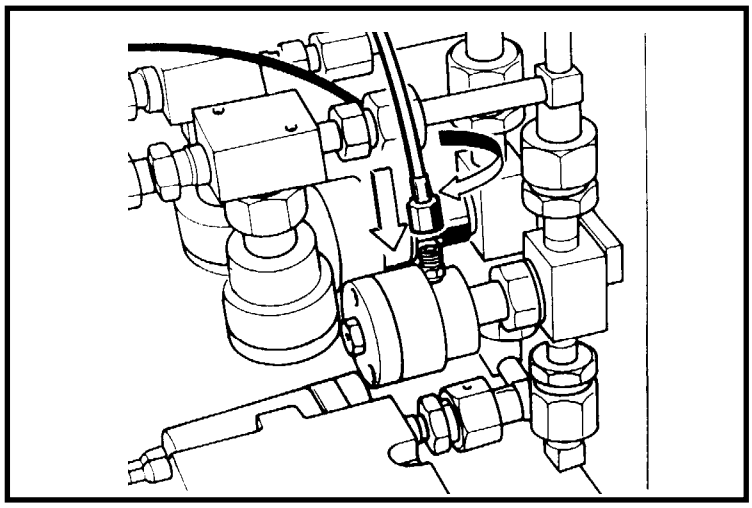

(e) Check to make sure that the manometer has reached **- 0.8 bar** at least.

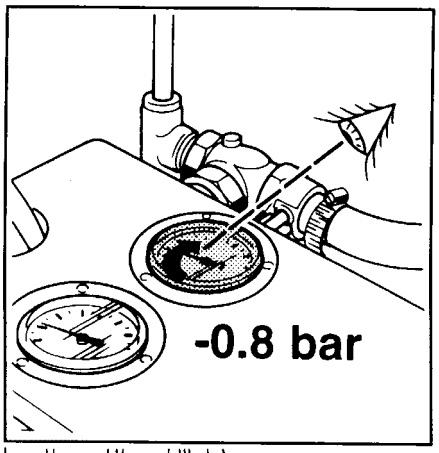

(f) Should the vacuum value be higher, release pressure by means of valves **MV1** and **MV2**.

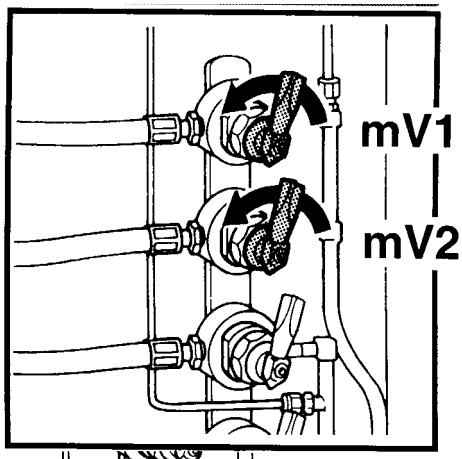

(g) Remove the cap of pressure switch **VSB**.

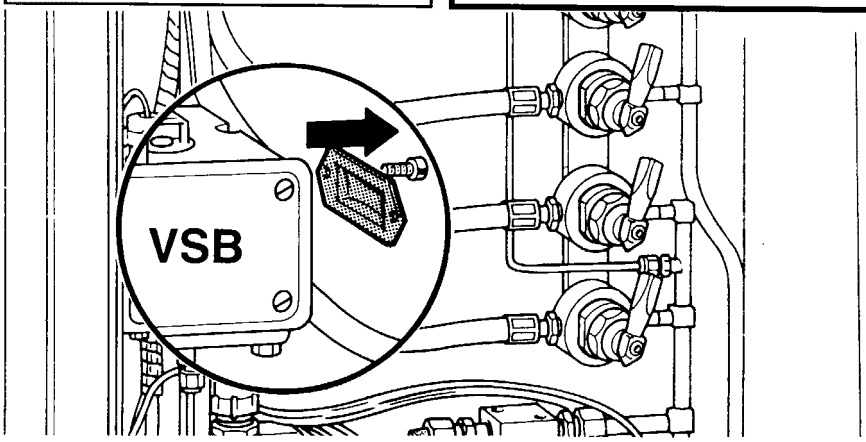

(h) Calibrate at **- 0.6 bar** by means of the proper wrench and make sure that the contact changes over – on the ALARMS DIGITAL INPUT page the **RED** LED turns on.

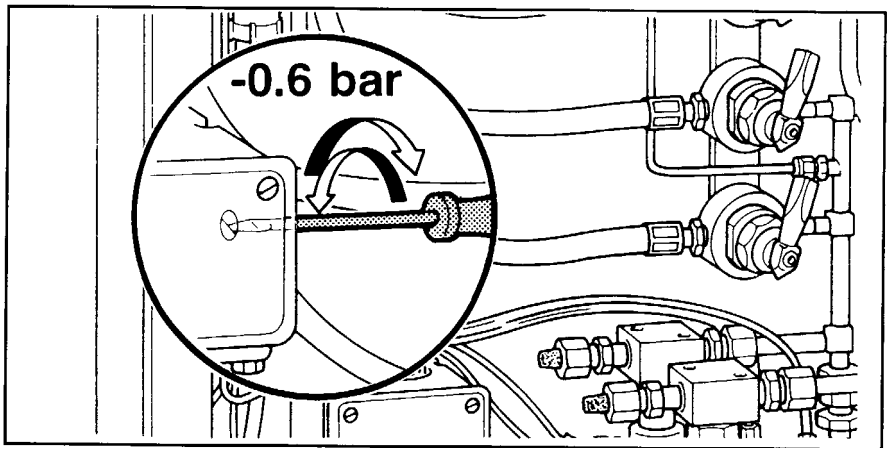

(i) Repeat the same procedure on station **A** by operating on valves **VT1** and **VT3** and by releasing excess vacuum through **MV3** and **MV4**.

(S-1) Controls :

Don't forget to connect all the pneumatic tubes back in their position.

(T-AWE1) REACTOR HEAT EXCHANGER

(T-AWE1).1 Water connections : see group (T)

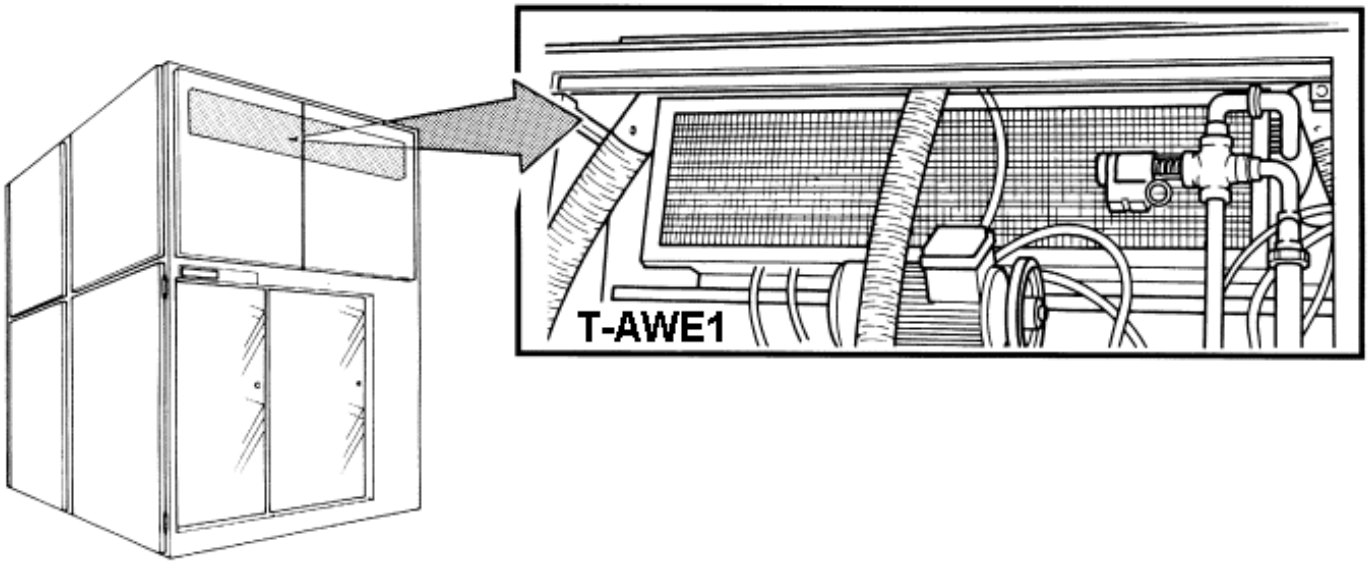

In case of substitution please contact LPE.

(T-AWE2) COMPUTER HEAT EXCHANGER

(T-AWE2).1 Water connections : see group (T)

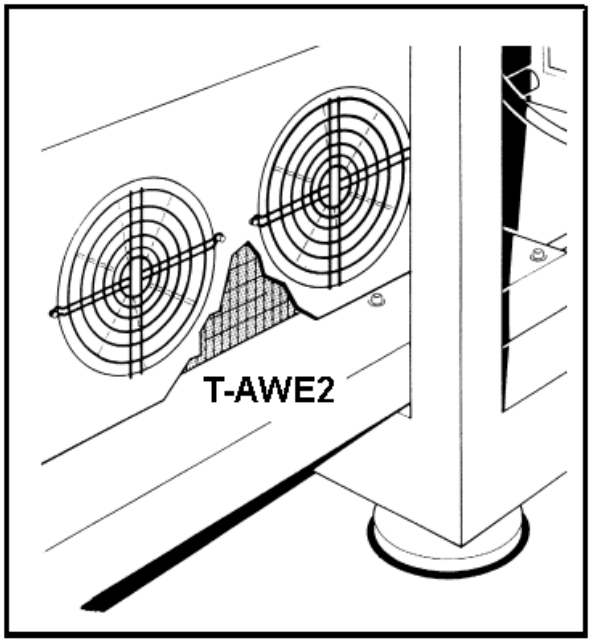

(V-0) BELL-JAR CHANGE & QUARTZ WET WASHING & BELL-JAR CAP

⚠ **CAUTION** Before beginning the following maintenance operations, make sure that the quartz-guard is always backed, because in REACTOR MAINTENANCE, the safety photocell of the quartz-guard does not work and there can be interference with quartz-guard during shutter plate movement, with possible damages.

Before proceeding to any cleaning or maintenance, return to the MAIN MENU and select the REACTOR MAINTENANCE. Management→ Lift Management command.
This command is available only if the reactor is IDLE in N_2.

⚠ **CAUTION** Only the personnel authorized to handle acids is allowed to carry out any cleaning and washing operation on this group.

⚠ **CAUTION** Dip the BELL-JAR AND THE QUARTZWARE in water and wash them before using acids. Failing to do so would cause violent explosions with serious damage to the maintenance engineer.

(V-0).1 Special equipment needed for this item :

In case of bell-jar wet washing
- Bell - jar washing hood
- All individual protections for the personnel working in contact with acids.

(V-0).2 Special tools needed for this item :

- Suitable gloves (suitable for acids)

In case of bell-jar wet washing (for bell-jar, tubes, ring nuts and quartzware).
- Nitric / Hydrofluoric solution (ex. HF 40% HNO3 65%)
(1 a 3)

In case of bell-jar cap cleaning (for bell-jar cap):
- demineralized water
- isopropyl alcohol

Quartz wet washing procedure

(a) Wet all the surfaces with the acid solution.
(b) Let acid react especially where there are silicon deposits.

Note
Since the acid solution reacts with quartz too **(SiO2)**, **(a)** and **(b)** points must be done as fast as possible.

(c) Rinse with demineralized water (min 10 Mohm*cm) till the acid completely disappears **(about 10 minutes).**
(d) Rinse with acetone or isopropyl alcohol of transistor quality and dry.

⚠ **CAUTION** Used acids are very dangerous.
Use safety precautions when handling acids wear suitable gloves , glasses etc.
Do not use the acid solution for further quartz washing

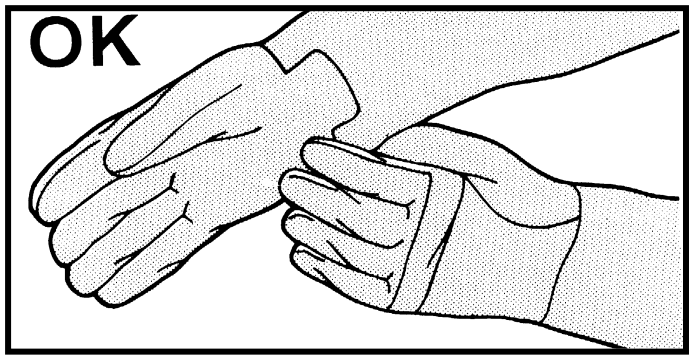

WARNING For gilt bells, the acid used for washing must never come into contact with the external gilding. Should this occur accidentally, immediately wash the damaged part with water.

(V-0).3 Controls :

None

(V-0).4 Long term maintenance :

None

(V-0).5 Bell-jar removal (bell-jar, bell-jar cap, tubes, ring nuts and quartzware)

Two people are required for this operation : one operates the LIFT (LIFT command) and one holds the bell-jar cap during the bell-jar lowering (see forth).
Use clean suitable gloves for the following operations.

(a) Open the shield.

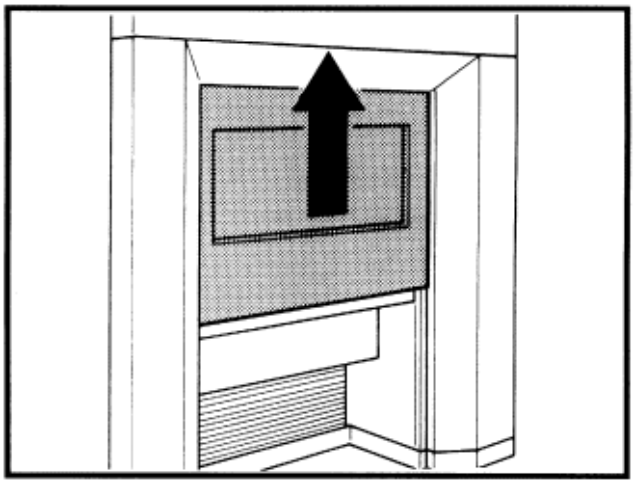

(b) Remove the front table of the loading station.

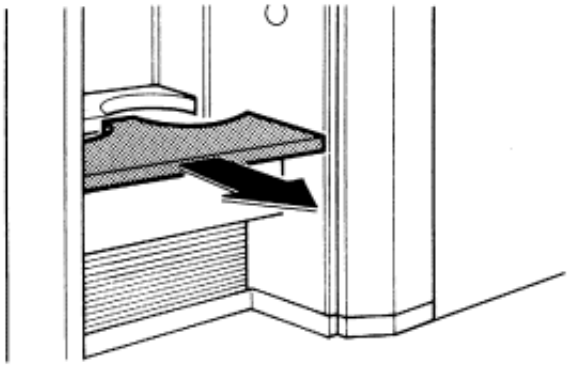

(c) Open the station selected by the LIFT command.

(d) Remove the susceptor using the susceptor trolley **(V-12)**.

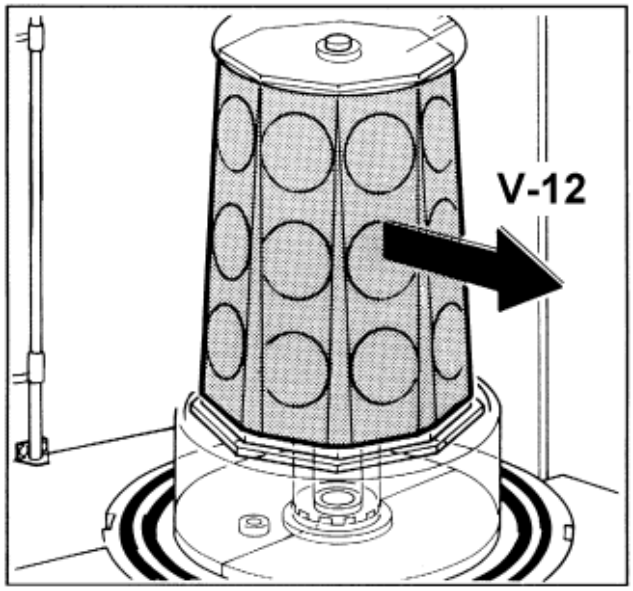

(e) Remove the quartz support tube and all the quartz screens below.

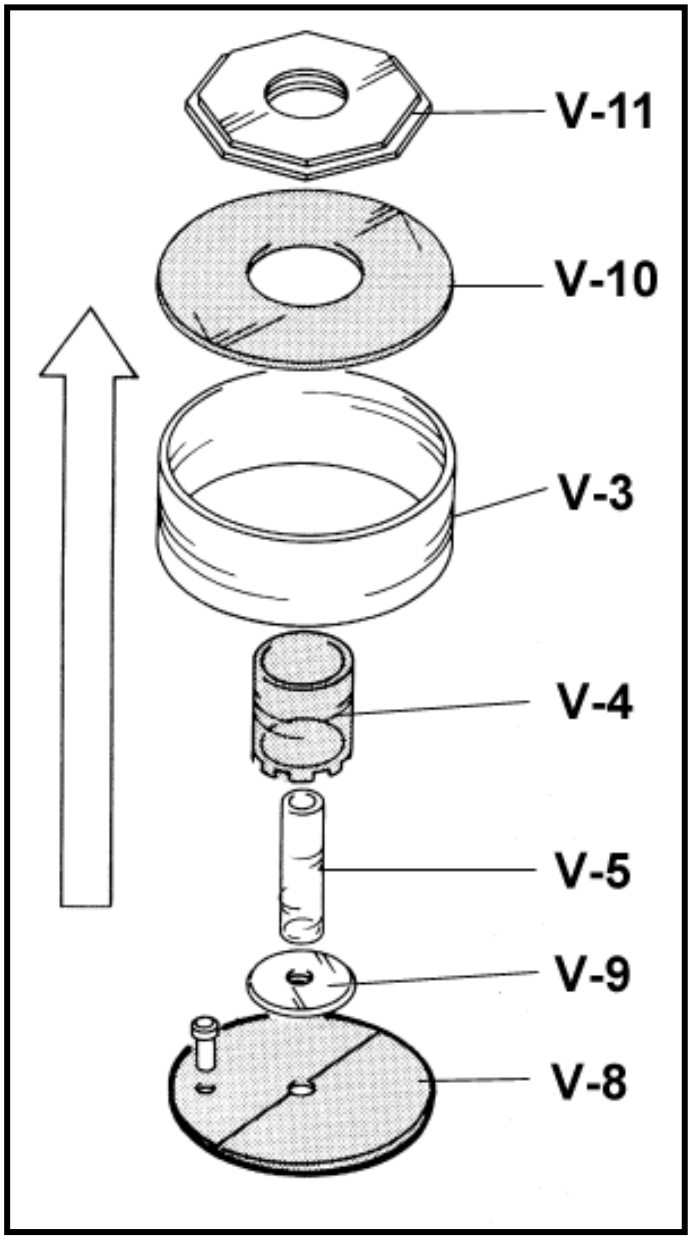

(f) Lift the shutter plate to the closed position.

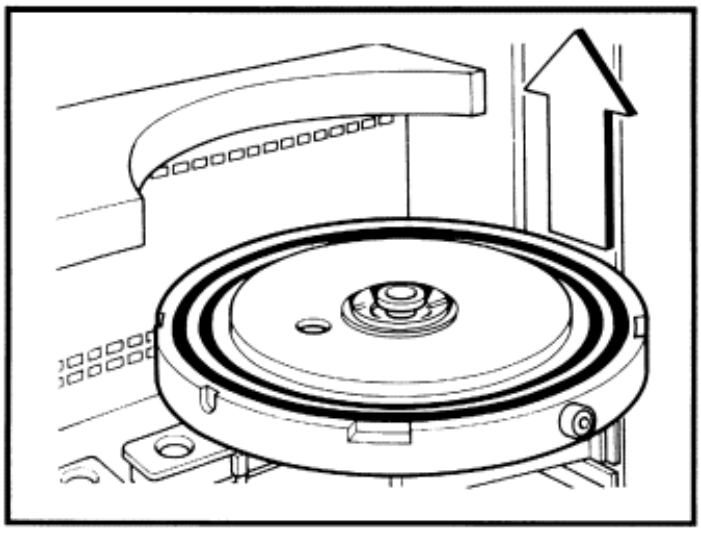

(g) Unscrew the three bell-jar cap knobs **(I-1)** and check that the bell-jar doesn't stick to the cap.

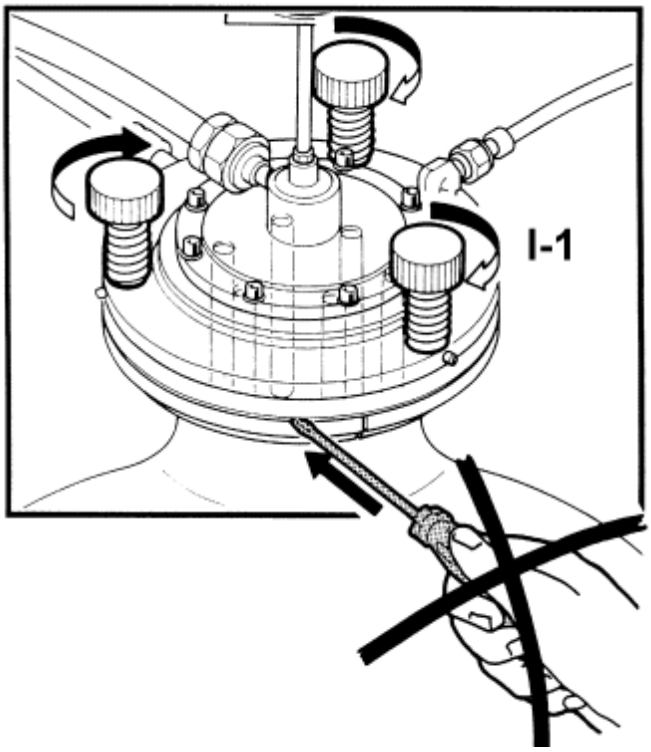

NOTE: It's forbidden to use sharp metallic tools to remove the bell-jar from the cap.

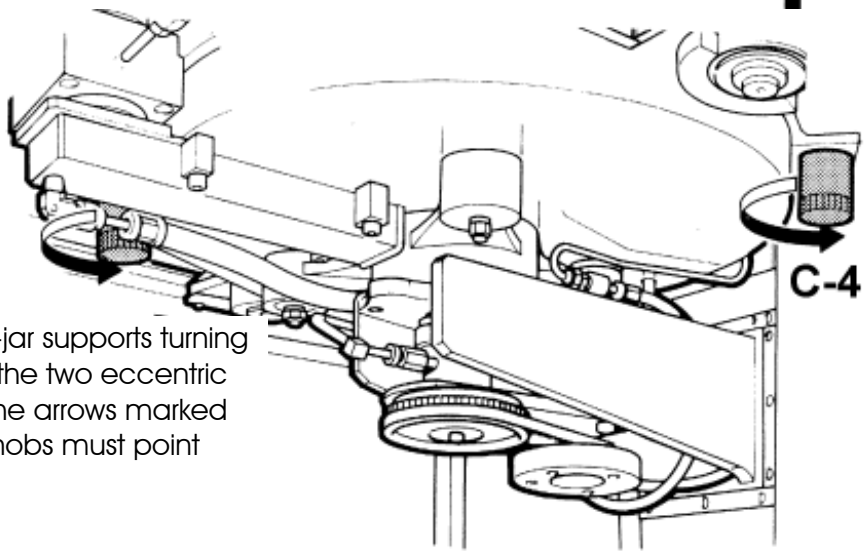

(h) Free the bell-jar supports turning the knob on the two eccentric pins **(C-4)** (The arrows marked on the two knobs must point outside).

(i) Hold the bell-jar cap **(Group I)** carefully so that it does not move while the bell-jar comes down.

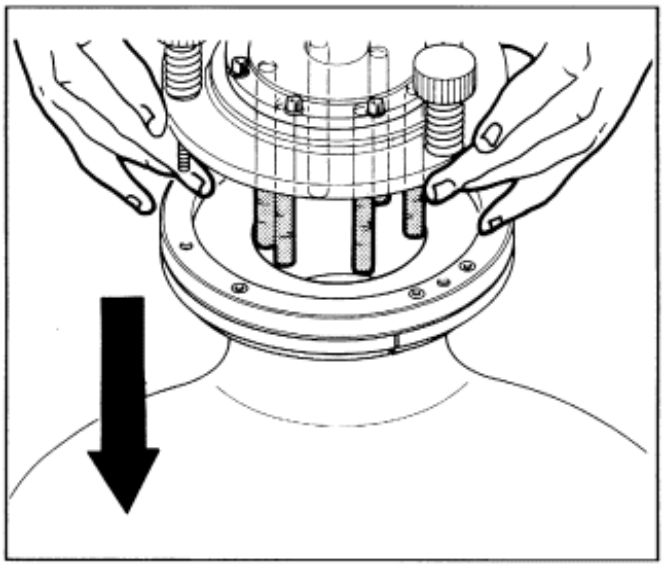

(j) When ready ask the other person to lower the bell-jar and the shutter plate to the lower position (LIFT command).
The other person **must** be ready to stop the lift movement in case of need.

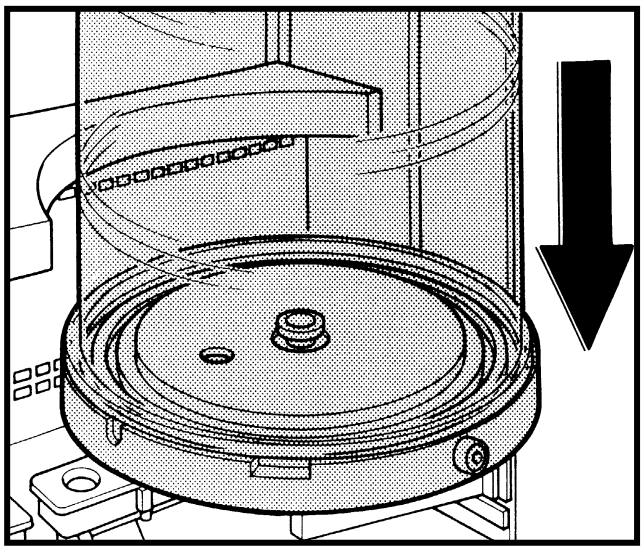

WARNING To avoid quartz breaking risk, make sure the bell-jar lowers together with the shutter plate, right after the LIFT command has been pressed, checking that the bell-jar doesn't stick to the silicon tube or the o-ring **(C-7 and C-8)** or that the two eccentric pins **(C-4)** are completely open.

CAUTION Carefully hold the bell-jar cap during the bell-jar lowering and make sure there is no contact **at all** between the bell-jar and the quartz tubes **(I-27)**.
In case of contact immediately ask the other person to stop the lift movement.
In case of interference the quartz tubes can be broken.

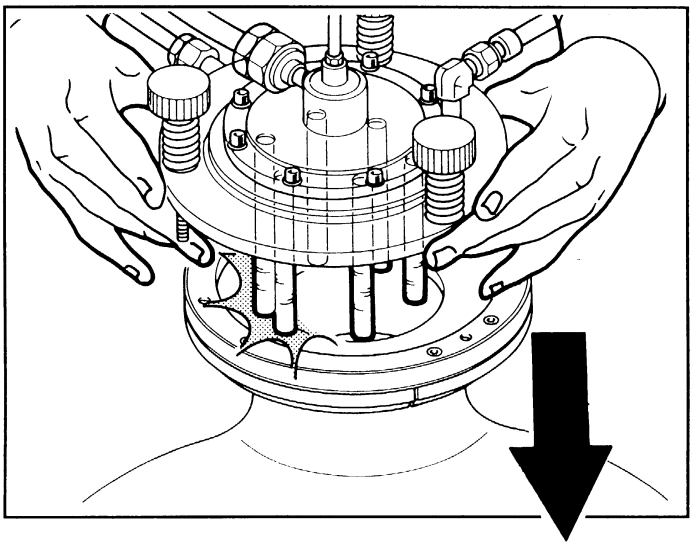

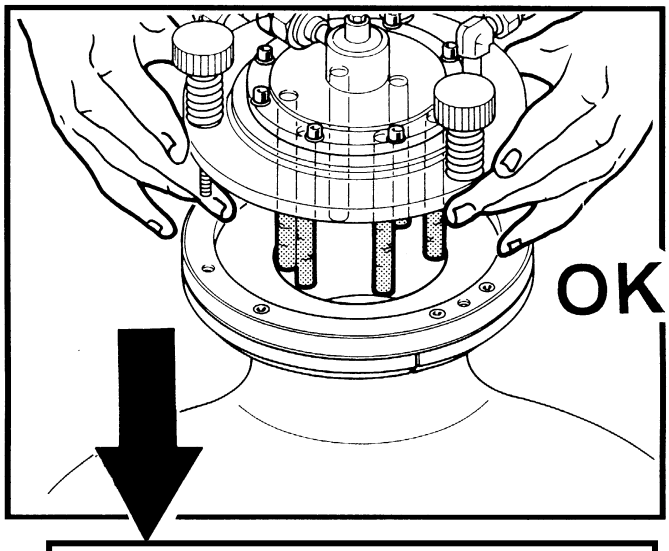

(k) Carefully remove the bell-jar **(V-13)**, slightly lifting the lower flange and turning the body.

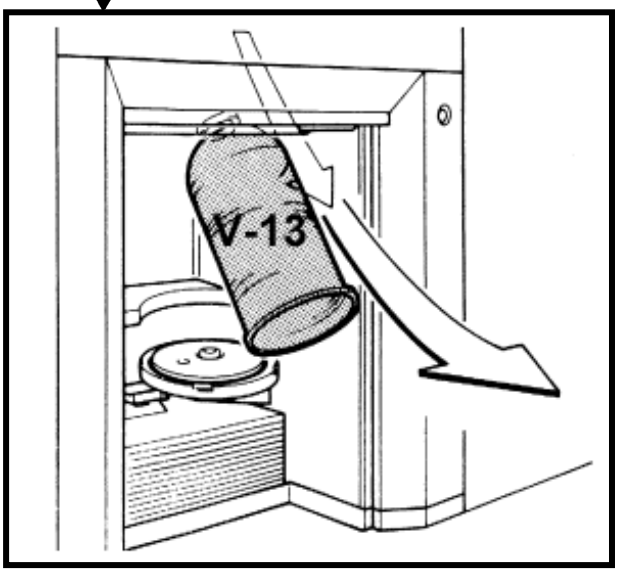

(l) Remove the ring **(I-10)**, the half rings **(I-9)** and teflon ring **(I-8).**

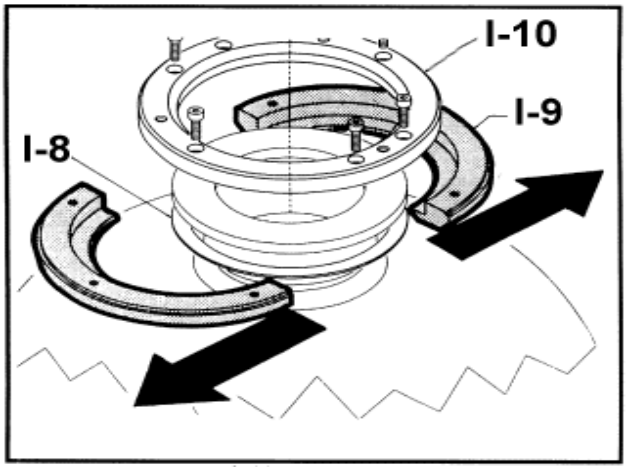

(m) Unscrew the quartz tubes **(I-27)** from the cap.

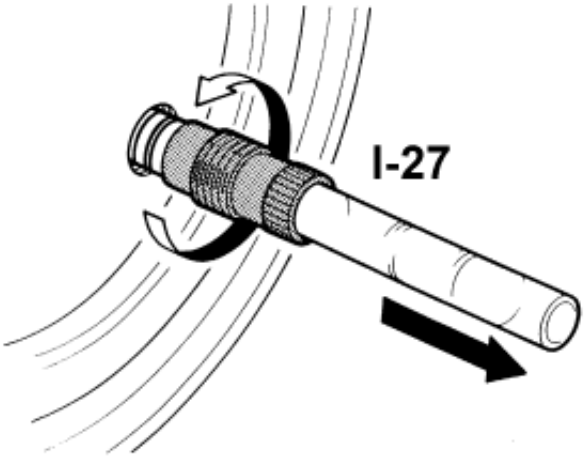

(n) Remove the tube **(I-27)** from the ring nut **(I-26)**.

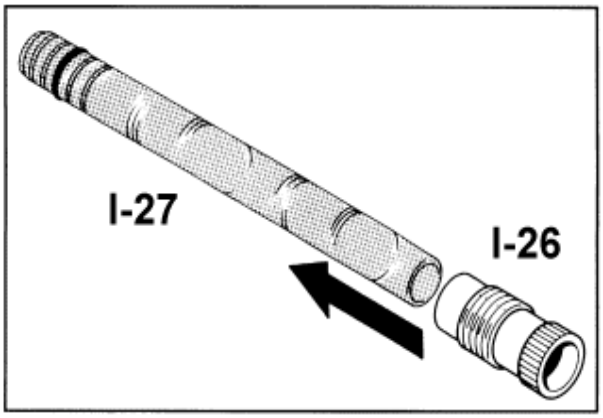

(o) Remove the O-ring **(I-25)**, taking care to sign its position.

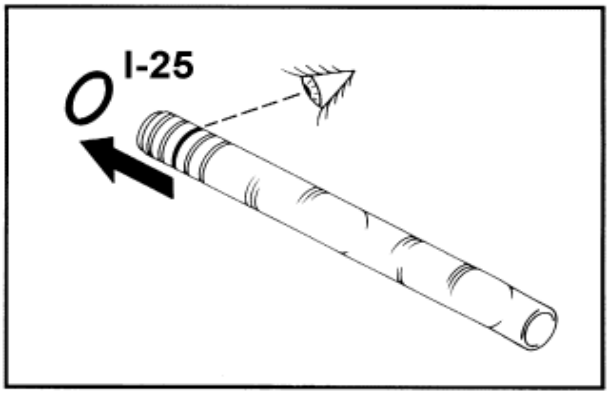

Proceed to wet washing of the bell-jar and of the quartzware with nitric / Hydrofluoric solution in an acid fumes hood.

(p) Proceed to the bell-jar cap cleaning.

To clean the bell-jar cap:

(q) Remove the O-rings **(I-6)**, **(I-7)**.

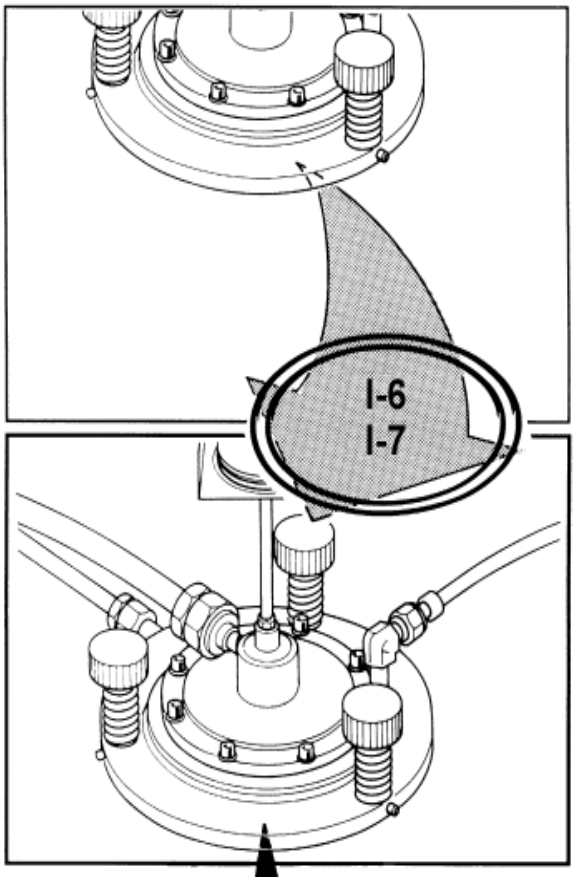

(r) Clean the cover surface and the O-ring slots at first with an abrasive cloth and then with a lint free cloth damped with demineralized water.

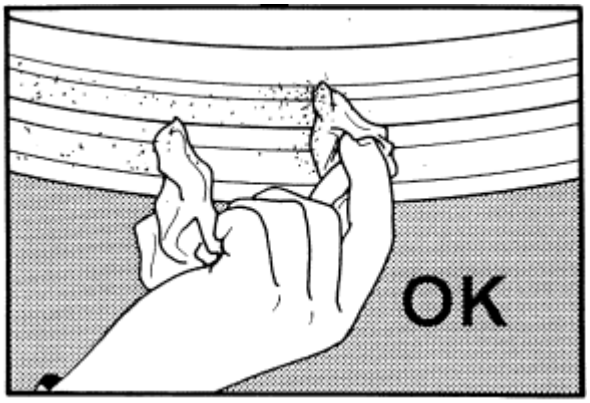

(s) Clean again with a lint free cloth damped with isopropyl alcohol.

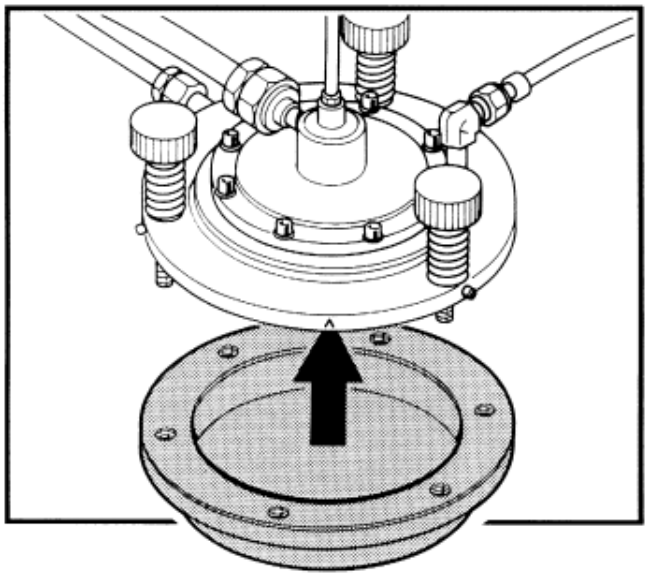

(t) Cover the surface with the apposite cap cover, to avoid the cap oxidization.

Proceed to wet washing of the bell-jar and of the quartz ware with nitric / Hydrofluoric solution in an acid fumes hood.

(V-0).7 Assembling the bell-jar and bell-jar cap quartz tube

Two people are required for this operation:

one operates the LIFT (LIFT command) and one holds the bell-jar cap during the bell-jar assembling (see forth).

Use clean and rubber latex gloves for the following operations.

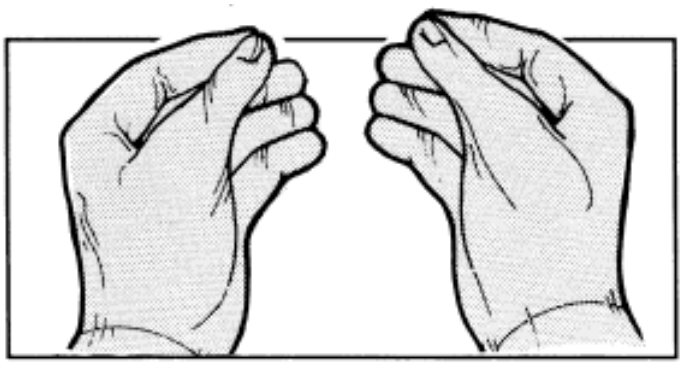

(a) Insert the teflon ring gasket **(I-8)** under the quartz flange.

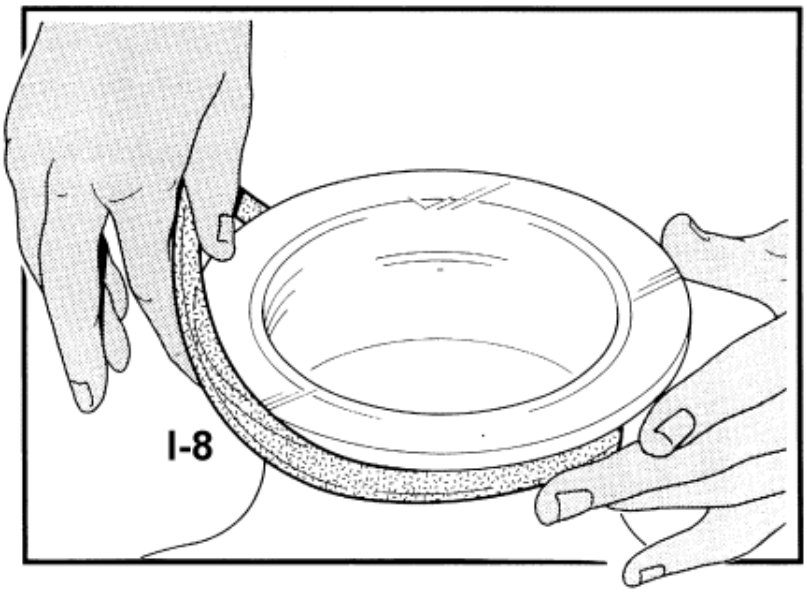

(b) Position the half rings **(I 9)** under the teflon gasket.

ATTENTION: Verify that both the half rings **(1-9)** have the same number stamped on them in order to prevent any damages of the bell-jar.

(c) Put the ring **(I-10)** and tighten with the screw **(I-11)** not excessively. Control that the group must be free to rotate around the bell-jar upper flange.

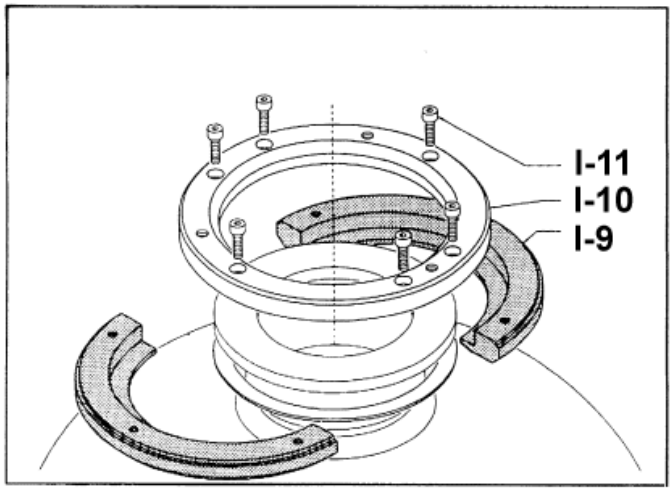

(d) Remove the cap cover.

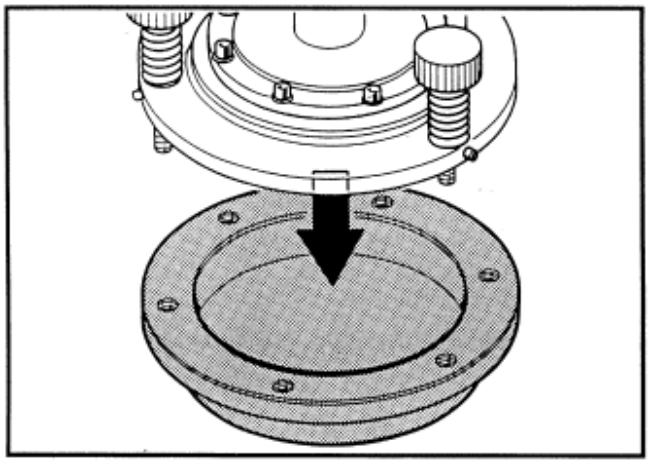

(e) Insert the O-ring **(I-25)** on the tube in **its former position.**

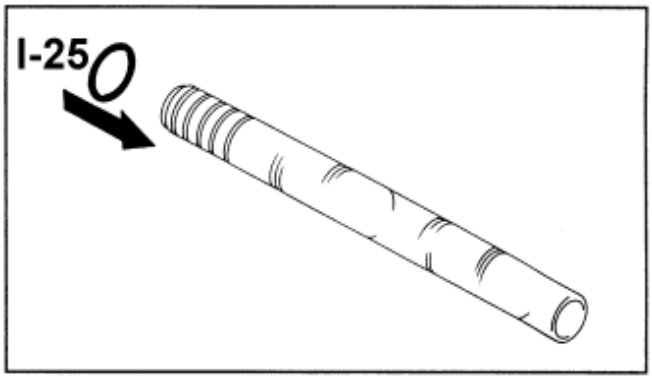

(f) Insert the tubes **(I-27)** with the O-ring into the ring nut **(I-26).**

(g) Insert the tube with ring nuts into the cap slots.

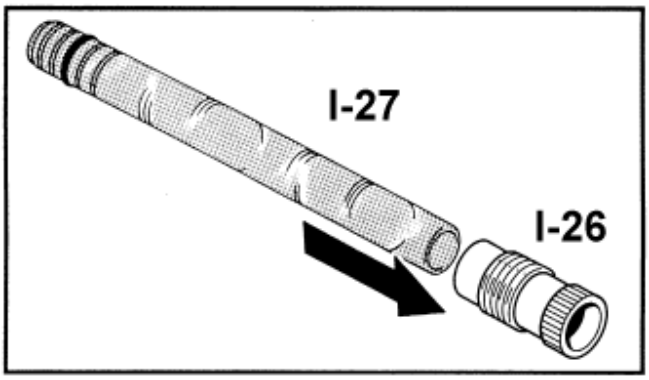

(h) Screw the ring nuts **(I-26)** and tighten them up by hand.

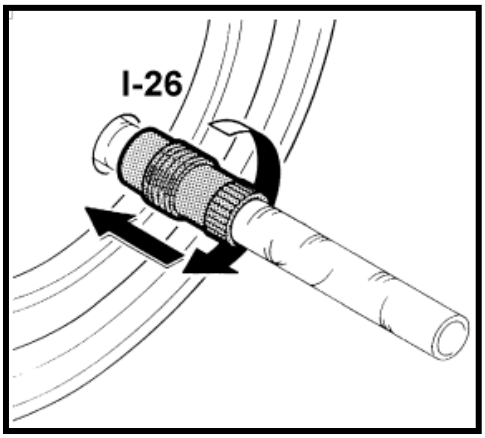

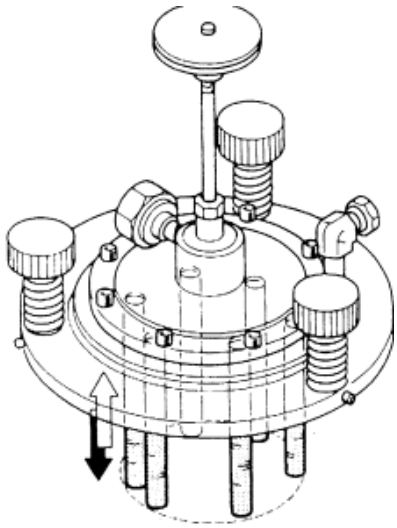

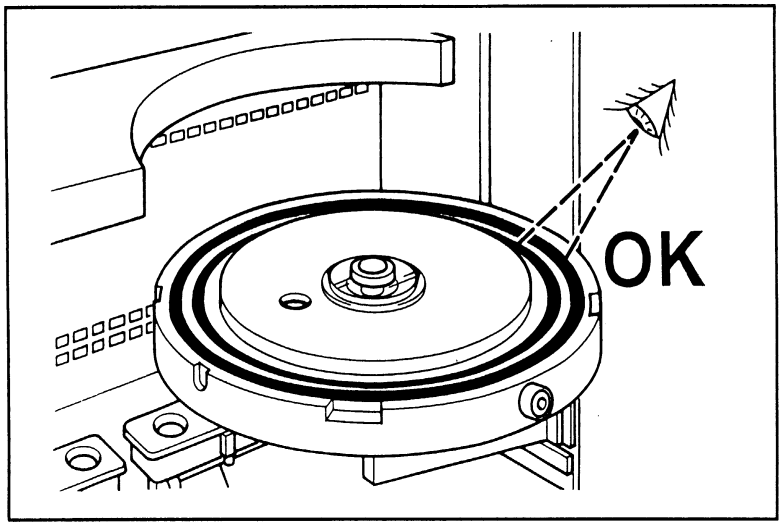

(i) WARNING

MAKE SURE THAT THE O-RINGS (C-7 and C-8) OF THE SHUTTER PLATE, UPPER RING, AND THE SILICON TUBULAR GASKET ARE CORRECTLY FITTED IN THEIR SEATS, AND THAT THERE ARE NO FOREIGN BODIES LEFT BEHIND ON THE SHUTTER PLATE: BELL-JAR BREAKAGE HAZARD.

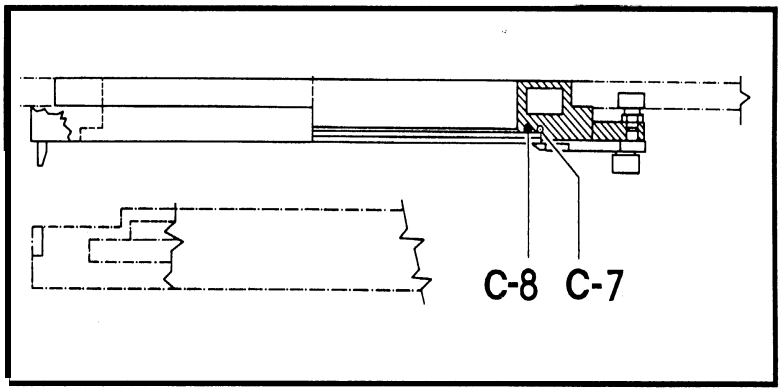

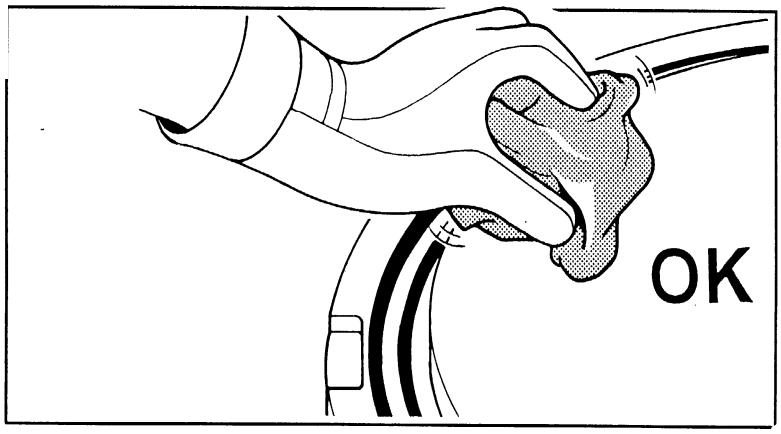

Note

The silicon tubular gasket C-8 must have a length of 1472mm (56.18 inch).Since it's a silicon tube during the installation, it should not be tightened inside the groove,(otherwise it begun longer) but just pushed in.
Verify always that the two tube ends are perfectly connected as in the picture.

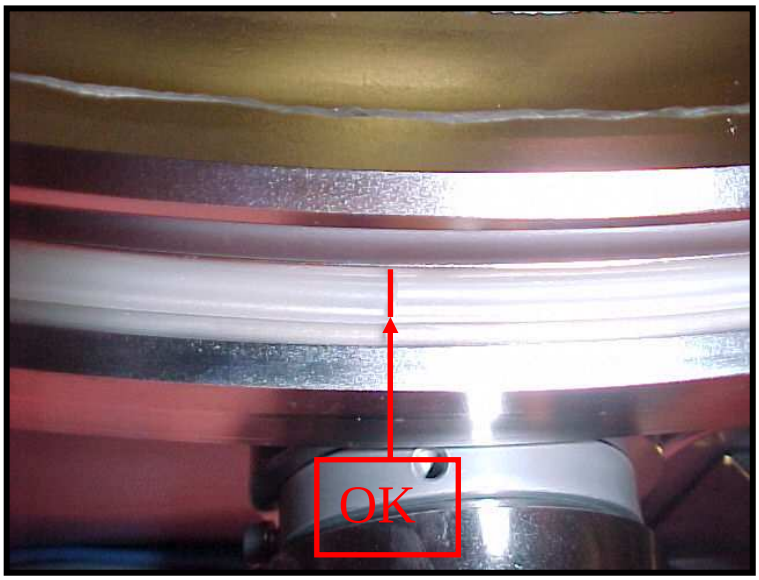

If the tube ends are not perfectly connected there will be an air whistle coming from the reactor top area which may cause particles on the wafer.

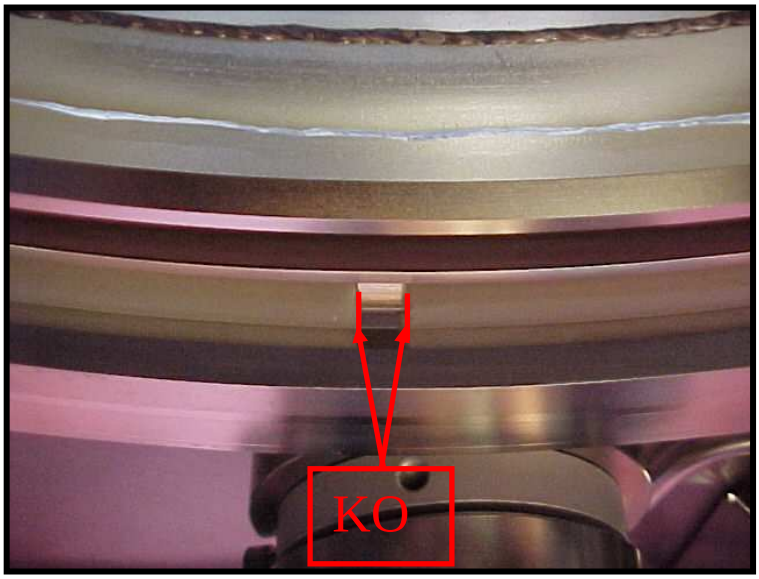

If the tube ends are one above the other there is the risk of break the bell-jar.

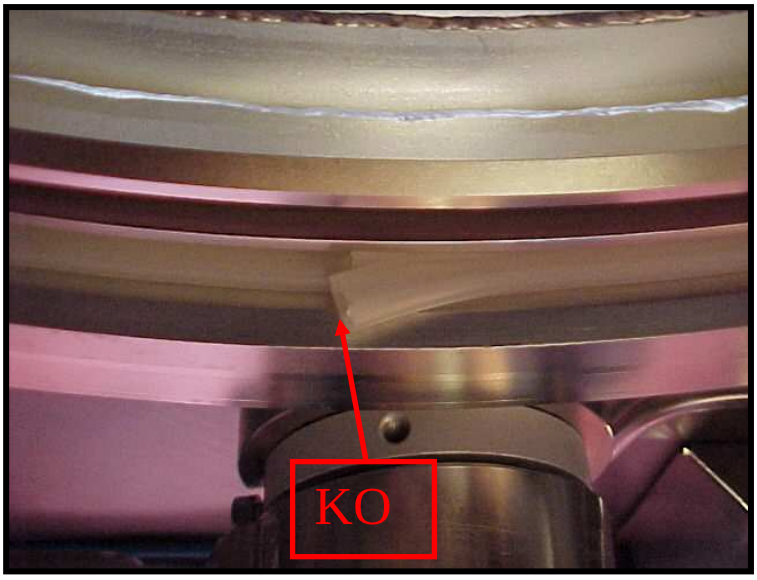

(j) Position the bell-jar **(V-13)** on the shutter plate.

(k) Perform a careful centering of the bell-jar on the shutter plate, by centering it on the outer edge of the shutter plate

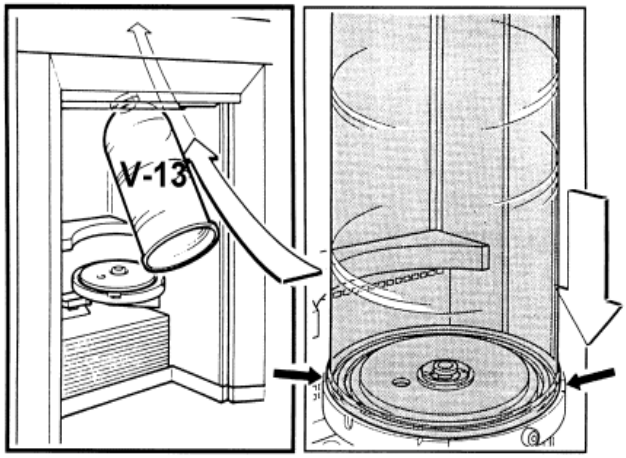

⚠ CAUTION

Remember:
Use the Bell Jar **WQ5362** in Reduce pressure application

Use the Bell Jar **WQ5359** or HRC in Atmospheric applications

Bell Jar with reflective coating (HRC):

fig.1

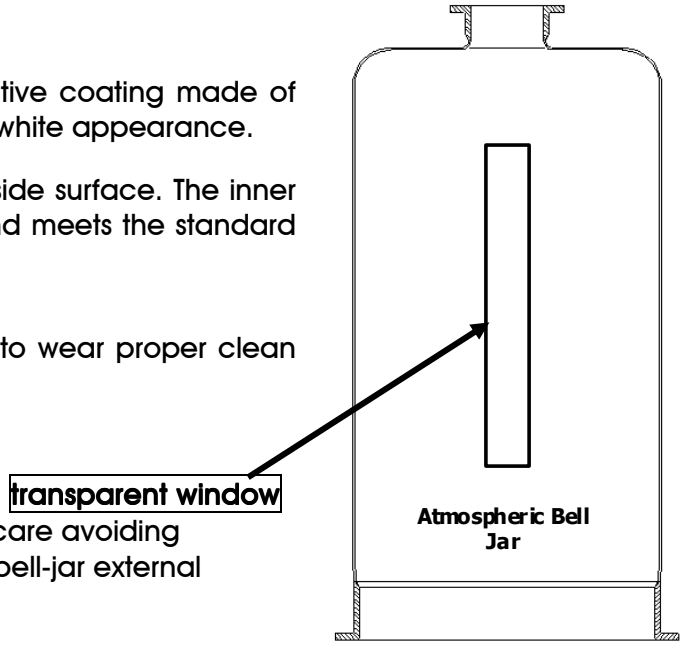

1. General

The Reflective Coating (HRC) is a highly reflective coating made of pure synthetic quartz. The HRC has an opaque white appearance.

Reflective Coating (HRC) is applied on the outside surface. The inner (process) surface of the bell jar is uncoated and meets the standard quality of the PE2061bell jars.

Caution
Before unpacking and assembling make sure to wear proper clean room gloves

2. Cleaning

Treat the reflective coating (HRC) with extreme care avoiding damage, also avoid any liquid contact on the bell-jar external surface (water, acid).
Perform only internal washing.
If the coating accidentally get in touch with water it will need to dry for at least 3 hours at 80°C, or 24 hours at room temperature.
If the coating get in touch with acid inspect carefully and check if any important damage has occurred.
Fixable defects are:
a) Chippings with a maximum size of 3x3 cm.
b) Scratches with a maximum length of 20 cm.

3. Handling

• Two operators are needed. The operator which actually will install the bell-jar has obstructed view because of the coated quartz, so there is high risk of hitting the shutter plate. The second operator must check that the bell-jar bottom flange will not hit or touch the shutter plate and to ease the positioning.

• Align the reference line on the bottom flange with the grub screw in the ball bearing of the shutter plate (fig.2).

• After the centering with the shutter plate, and while the bell-jar will go up the operator must be sure that the quartz will not hit the upper ring.
The second operator must be ready to stop the lift at anytime.
If the bell-jar scrapes against the upper ring it will be necessary to redo the centering.

• Make sure that the transparent quartz window on the bell-jar is aligned with the inductor windows (fig 1) and (fig. 3)

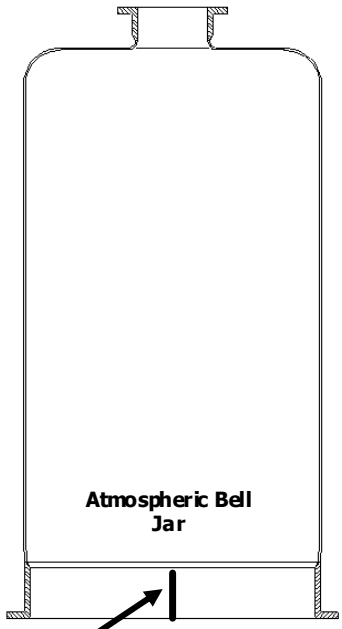

fig.2

vertical sign

Note

Always perform a Power Calibration after replacing the transparent bell-jar with the HRC.

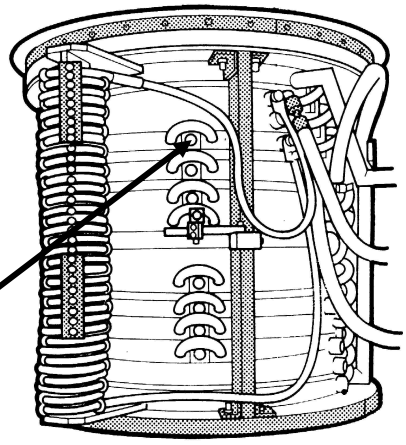

Inductor windows

fig.3

(l) Hold the bell-jar cap **(group I)** carefully, paying attention to the centering between the quartz tubes and the bell-jar.

(m) When ready ask the other person to lift up the bell-jar and the shutter plate (lift command). The other person **must** be ready to stop the lift movement in case of need

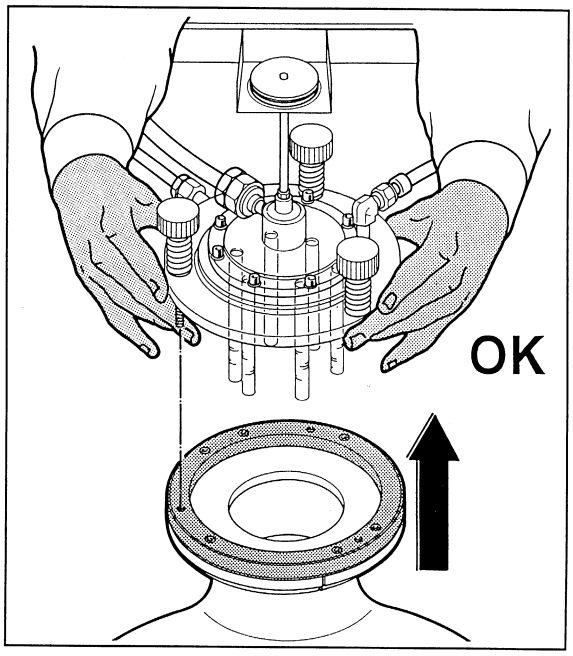

CAUTION

(n)HOLD CAREFULLY THE BELL-JAR CAP WHEN THE BELL-JAR IS GOING UP AND MAKE SURE THERE IS NO CONTACT AT ALL BETWEEN THE BELL-JAR AND THE QUARTZ TUBES (I-27). IN CASE OF CONTACT IMMEDIATELY ASK THE OTHER PERSON TO STOP THE LIFT MOVEMENT. IN CASE OF INTERFERENCE THE QUARTZ TUBES CAN BE BROKEN.

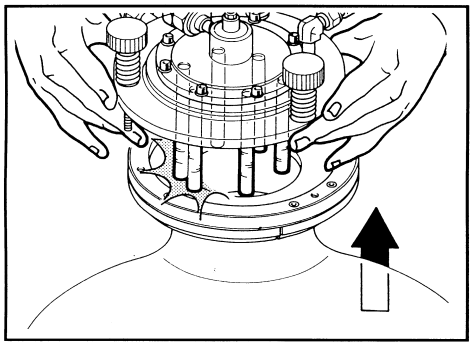

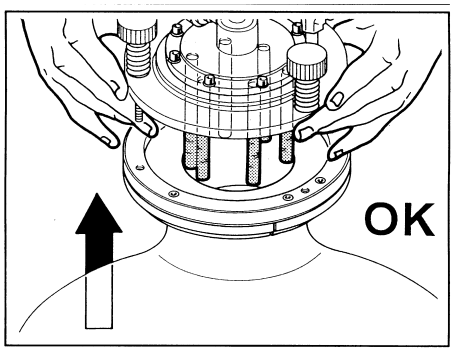

(o) Lift the shutter plate to the closed position.

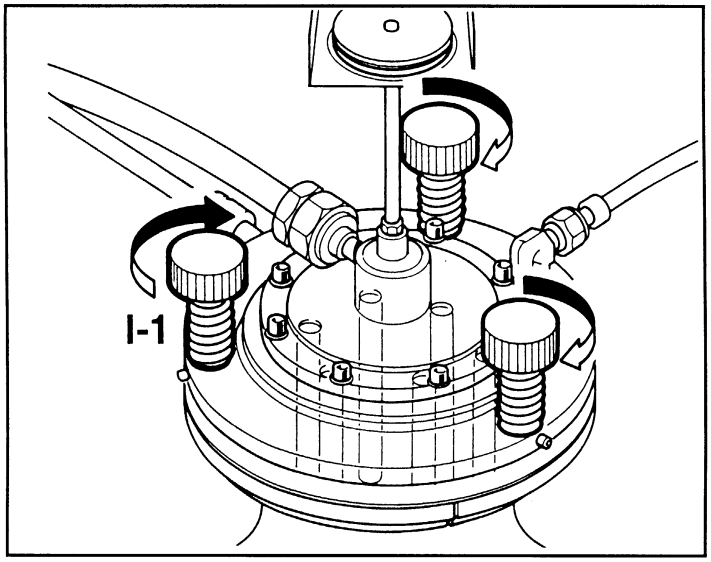

(p) Close the bell-jar Support
Turning the knob on the Two slides**(C-4)** (the arrows marked on the two knobs must point inside).

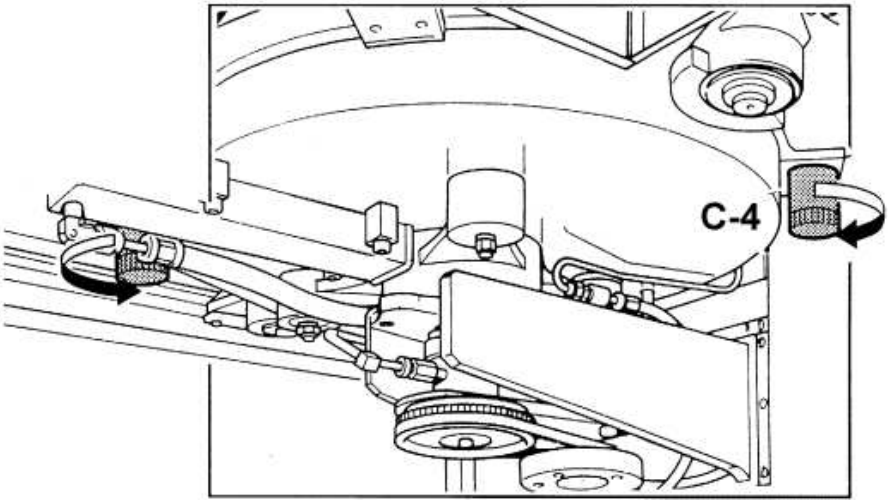

(q) Reassemble and tighten the bell-jar Cap knobs **(I-1)**, uniformly and fully

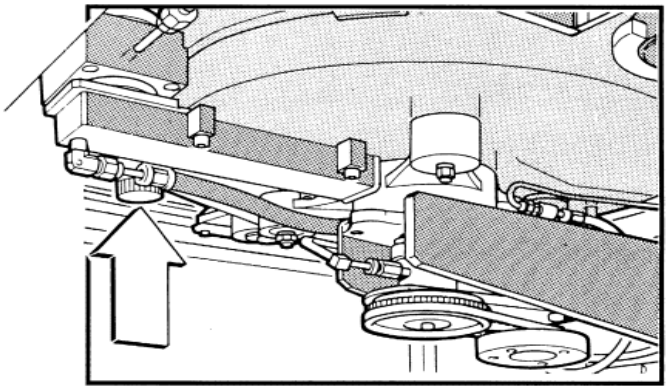

(V-0).8 Assembly of quartzware and susceptor on the shutter plate

SHUTTER PLATE FULLY LOWERED

(a) Mount the two half rings **(V-8)** and insert the graphite shutter **(V-1).**

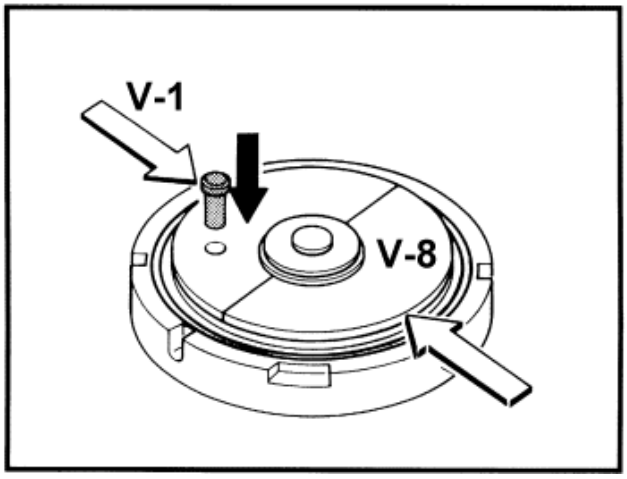

(b) Fit the spacer ring **(V-3)** and the top disk **(V-10).**

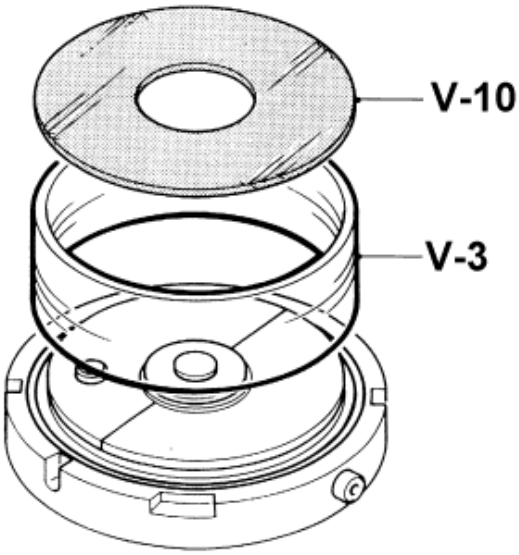

(c) Insert the cup **(V-4)** with the slots facing down.

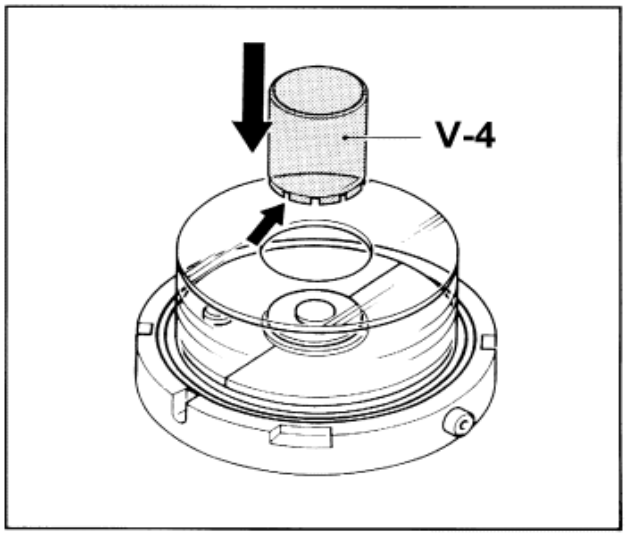

(d) Insert the exhaust tube **(V-5).**

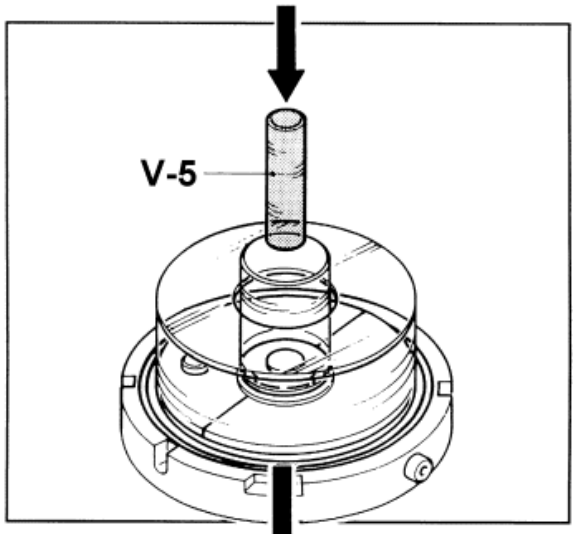

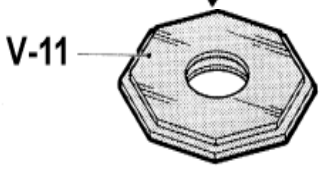

(e) Position the susceptor base **(V-11)**

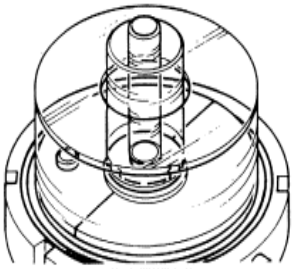

(f) Position the susceptor **(V-12)** on its base and center it.

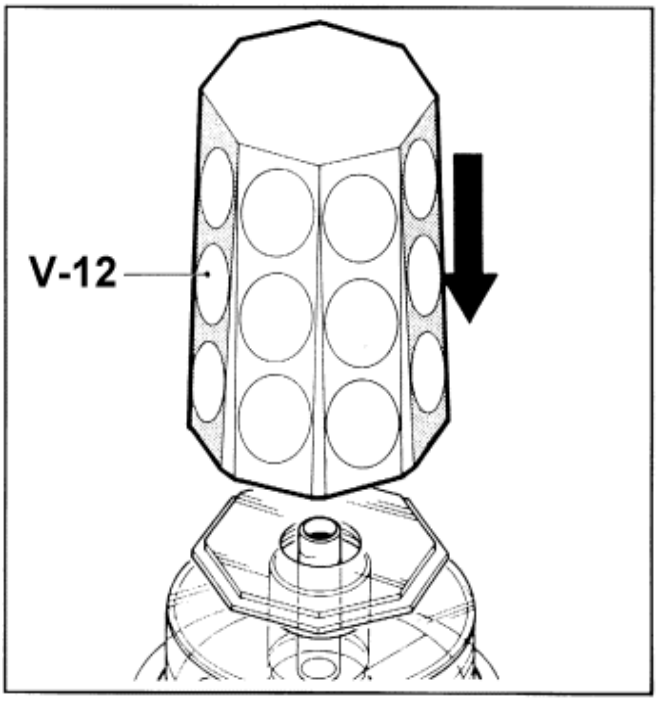

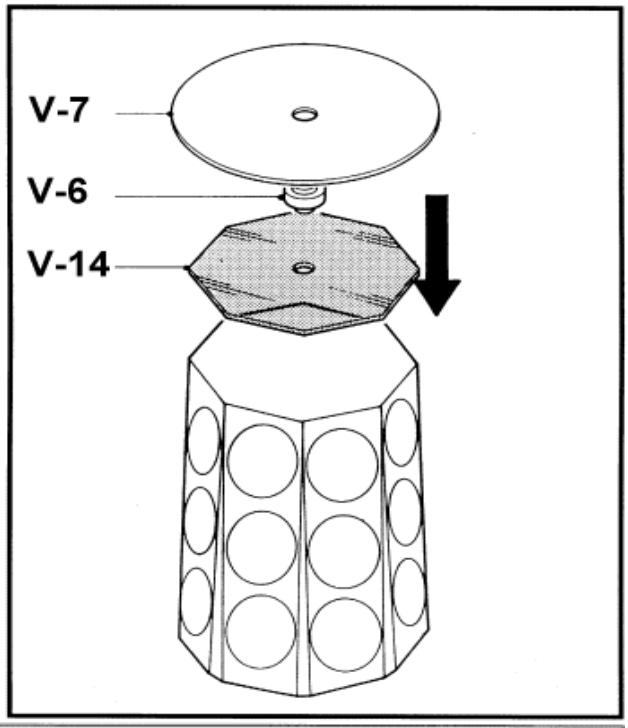

(g) Position the cap **(V-14).**

(h) Insert the spacer **(V-6)** in the bell-jar cap hole and position the upper quartz disk **(V-7).**

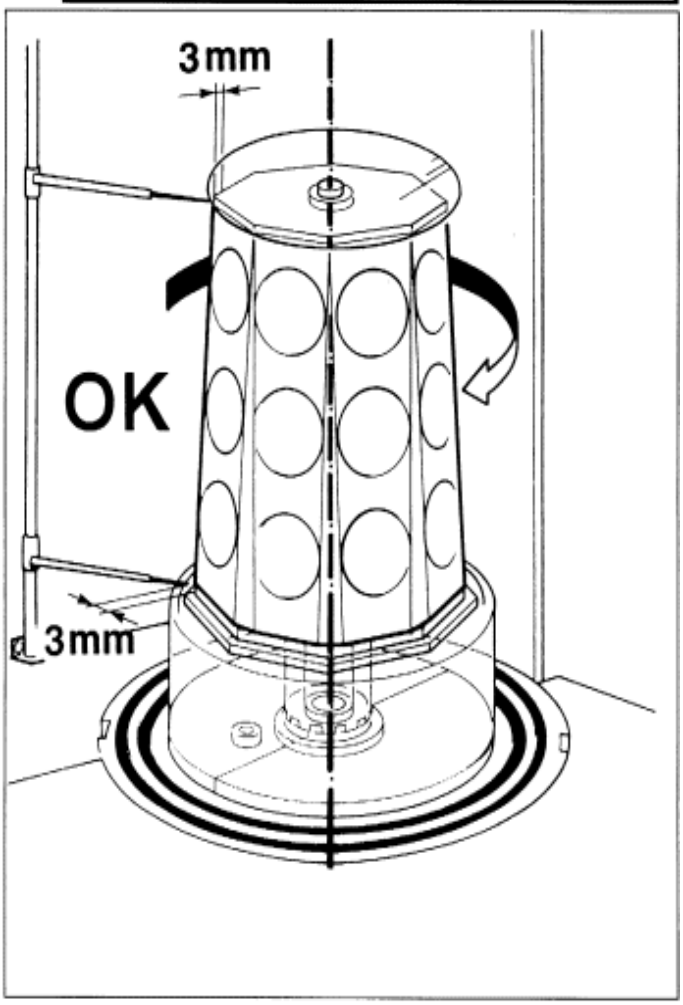

(i) Position the centering marks about **3 mm** from the susceptor edge.

While turning the unit with the pedal, check if the susceptor and upper disk are correctly centered, locating the susceptor rotation limit with respect to the reference points - if necessary, re-center it.

(j) Close the shutter plate.

(V-0).9	**Bell-jar calibration**
	None, beside the bell-jar centering after positioning the bell-jar back .
(V-0).10	**Suggestions**
	Take care of the susceptor centering

When the machine has come to the end of its life, dismantle it and make sure the assemblies described hereunder are disposed of through the appropriate companies assigned to disposal and in compliance with the current directives of the relevant country.

	MATERIAL	WASTE CLASS	PART
A	**STEEL**	FERROUS SCRAP	Lower framework and mechanical parts (plate, pole, lifting group, shield, gas panel).
B	**ALUMINUM**	NON-FERROUS SCRAP	Upper framework, inner and outer doors, plate supports, battery fins.
C	**BARE COPPER (BRASS)**	NON-FERROUS SCRAP	Battery pipe, inductor.
D	**ELASTOMERS**	PLASTIC RUBBER	O-Ring, water pipes.
E	**ELECTRIC WIRES CABLES**	SPECIFIC	
F	**QUARTZES**	GLASS	Bells, cap tubes and all the quartz material.
G	**GRAPHITE**	AGGREGATE	Susceptor, cover and bush support (disposal as per aggregate materials for building).
H	**ELECTRIC MOTORS**	SPECIFIC	Main fan, laminar flow motor, lift motors, vacuum pump rotation motors.
I	**ABSOLUTE FILTER**		(not contaminated by radioactive or biological materials) - Recommended to be disposed of in line with current regulations.
J	**OILS SPENT**	OILS	Lift geared motor (240 cc, Viscosity SAE 120) and capacitor.

DECONTAMINATING BEFORE DISPOSAL

For the parts of the machine that have come into contact with process gas, it's necessary to decontaminate them throughly.

*	**GAS PANEL** Extended cleaning with inert gas of all the lines (see MAINTENANCE chap. P-0)
*	**QUARTZWARE** Special washing (see MAINTENANCE chap. V-0).
*	**SHUTTER PLATE**
*	**MANIFOLD AND OUTLET**
VALVE DOPING AGENTS	Dismantling and special cleaning as described in the
*	MAINTENANCE chapter because of residues of SILICON and
OUTLETS TO SCRUBBER	DOPING AGENTS
*	**BELL-JAR CAP**

Vol.4

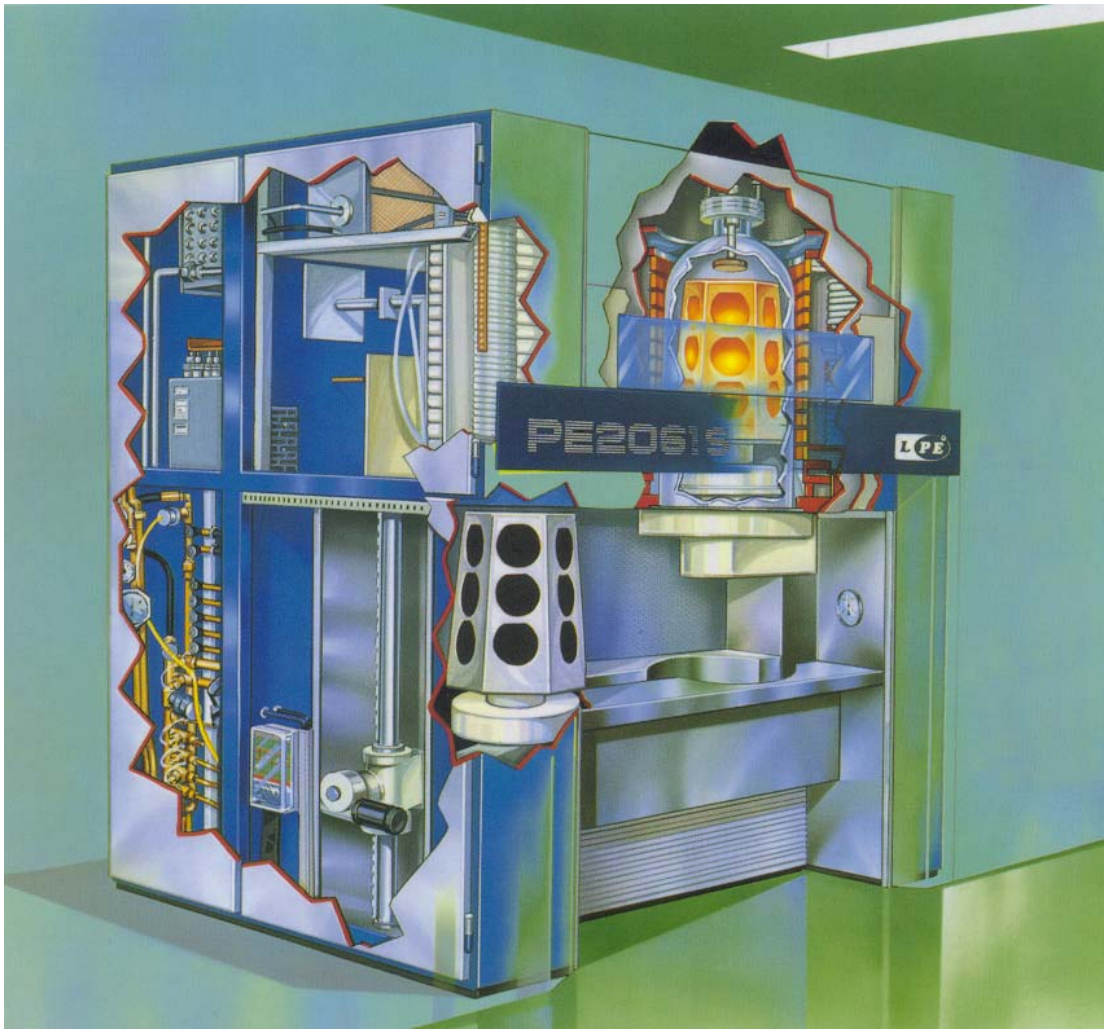

LPE S.p.A.
Powering the future

LPE s.p.a. - Via Falzarego, 8 - 20021 BARANZATE (MILAN) ITALY
Ph. ++39.02.3834151 - Fax ++39.02.38306118 - E-mail: info@lpe-epi.com

INSTRUCTION MANUAL

PE 2061 REL. #11 VOL.4

Chap. (26) Drawings List

Original version
ENGLISH

COPYRIGHT © 2002 **LPE EPITAXIAL TECHNOLOGY**
all rights reserved

No part of these Operating Instructions may be reproduced or used under any form or with any electronic or mechanical method including photocopying, recording with any other method, without the permission of the owner of the Copyright. The drawings are of exclusive ownership.

DRAWING LIST :

DWG	Release	Group	Description
• **Reference drawing for PE2061S**			
RH5250.U11	**04**		PE2061S - Lay out
RH5250.U12	**03**		PE2061S - Access area
RH5250.U13	**05**		PE2061S - Panel cut out
RH5250.U14	**05**		PE2061S - Water/air exhaust connecting points
RH5250.U15	**02**		PE2061S - Gas connections
RH5250.U16	**03**		PE2061S - Electrical connections
RE4196	**02**		Chlorosilane Bubbler
• **Electrical diagram**			
RH4847E4	**rev. 08**		
• **Pneumatic scheme**			
RH5040U1	**07**	G	Pneumatic scheme
• **Spare parts drawing**			
RH5200U1	**09**	A	Reactor components/groups
RH4842U	**02**	A	Emergency water box
RH5004U1	**04**	B	Locker group
RH5004G6	**03**		Cylinder Group
RH5000U1	**01**	C	Ring & upper plate group
RH5010U1	**01**	D	Shutter plate
RH5020U1	**06**	F	Lifting group
RH5040U2	**06**	G	Compress air inlet distribution
RH5030U1	**04**	H	Turn plate & motor flywheel group
RH4920U	**04**	I	Bell jar cap groups
RH5050U1	**05**	L	Exhaust valve group
RH4666U1	**01**	M	Winder group
RH5081U1	**02**	N	Induction coil 16" & MF capacitor group
RH5087U1	**02**	N	Pyrometer & optical fiber group
RH5145U1	**146**	P	Gas metering scheme (dwg)
RH5145U1	**146**	P	Gas metering scheme (list)
RH5121-BASE	**07**	P	Gas metering scheme lay-out
RH5121-DOPE2	**03**	P	Gas metering scheme lay-out
RH5121-DOPE3	**03**	P	Gas metering scheme lay-out
RH5121-SI2-20	**02**	P	Gas metering scheme lay-out
RH5070U1	**09**	Q	Air group
RH5131U1	**02**	R	Solenoid valve group
RH5090U1	**04**	S	Vacuum test group (scheme)
RH5090U2	**02**	S	Vacuum test group (lay-out)
RH4849U4	**05**	T	Water schematic cooling system
RH5500	**02**		Water lay-out cooling system (any emergency)
RH5510	**02**		Water lay-out cooling system (emergency execution)
RH5150U1	**16**	V	Quartz & graphite stuff (16" bell jar)

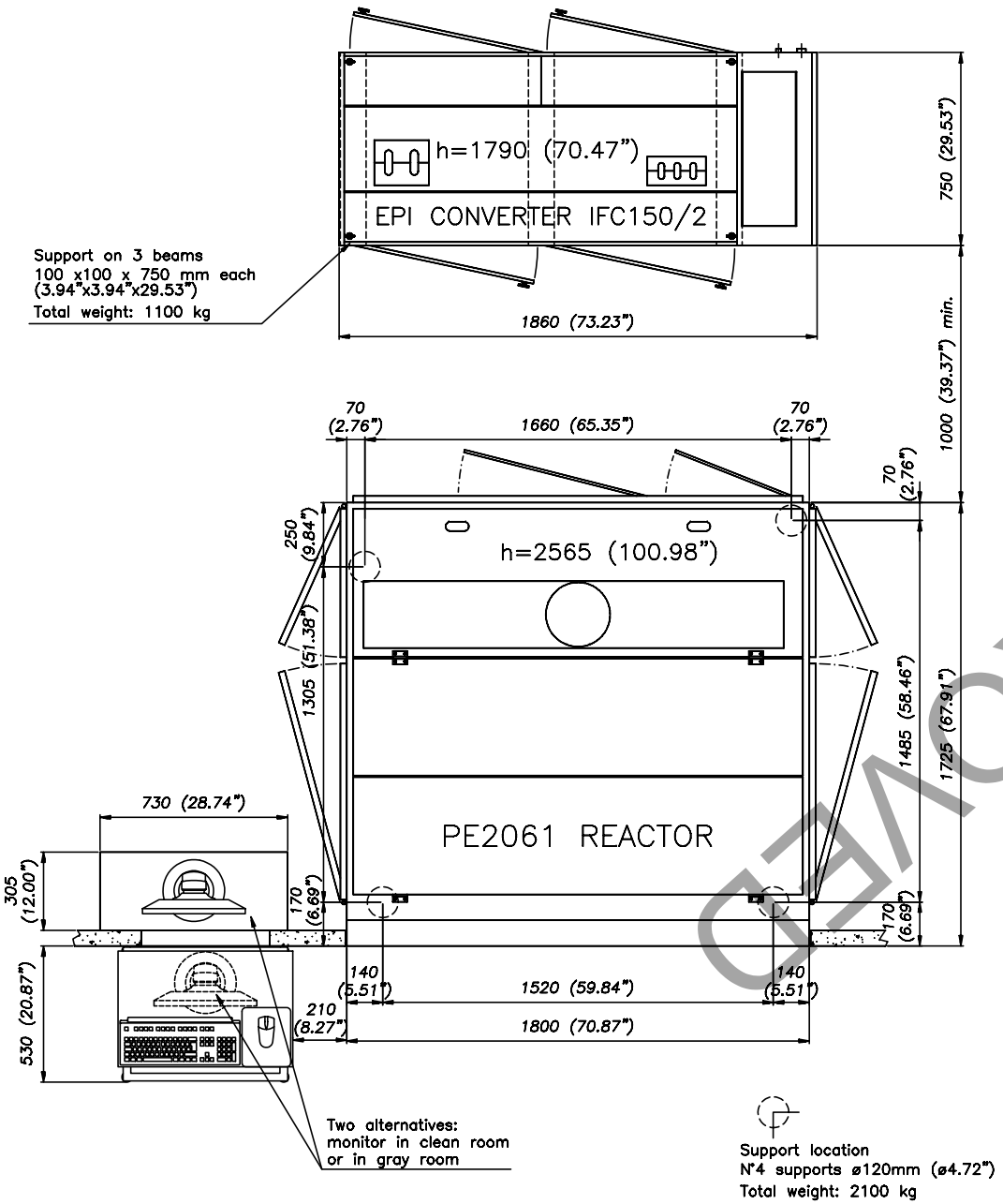

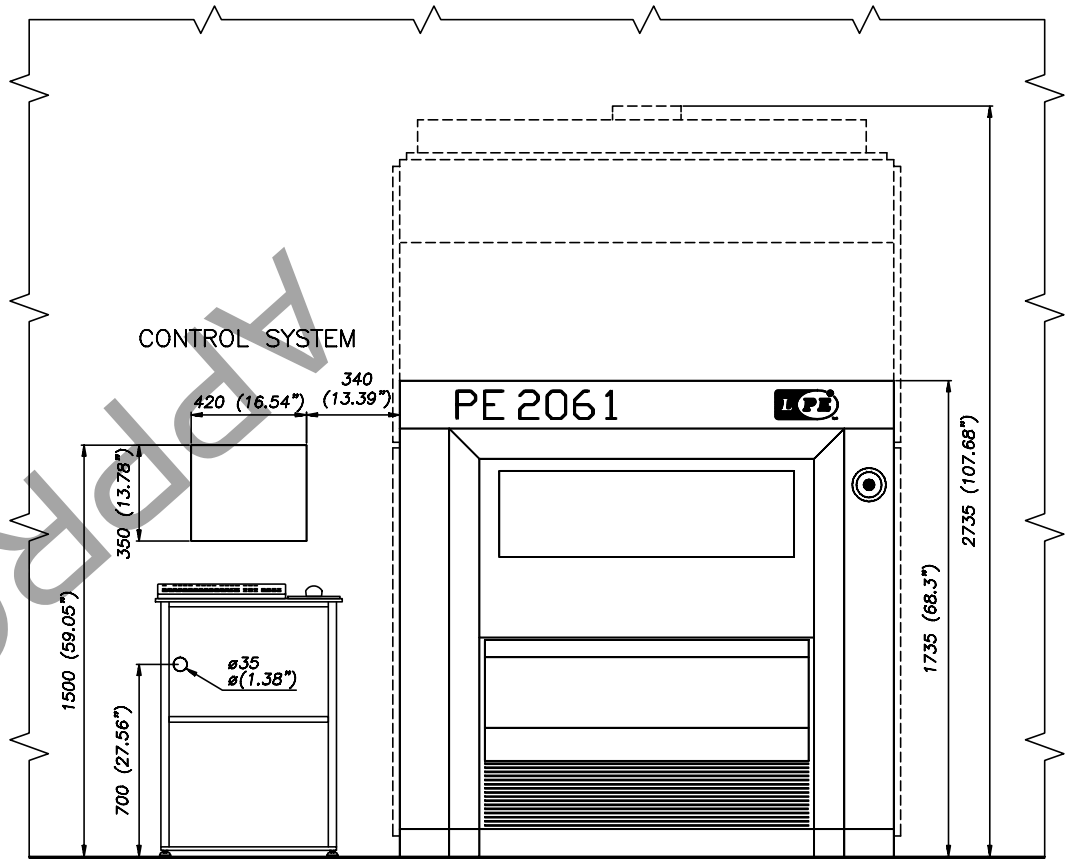

FRONT VIEW FROM CLEAN ROOM

measure unit = mm

APPROVED

Item	Qty	Description	Code

Measure without indication of tollerance	Treatment	Material

Prepared by	Checked by	Title	Sheet
Alfredo Zamboni	V. Ogliari	REACTOR PE 2061S	1/ 1
Original date 12/06/2002	Checked by	LAY OUT	Scale 1:20
	Approved by D. Crippa	Order No / Dwg No RH5250U11 / Section / Group	
	Latest rev 04		

L PE SpA Powering the future

CONFIDENTIAL This document and data disclosed herein is not to be reproduced used or disclosed in whole or in part to anyone without the permission of LPE S.p.A.

Modification description	Date	Prepared by
Cambiato tavolo in sala grigia	18/07/2005	A. Zamboni

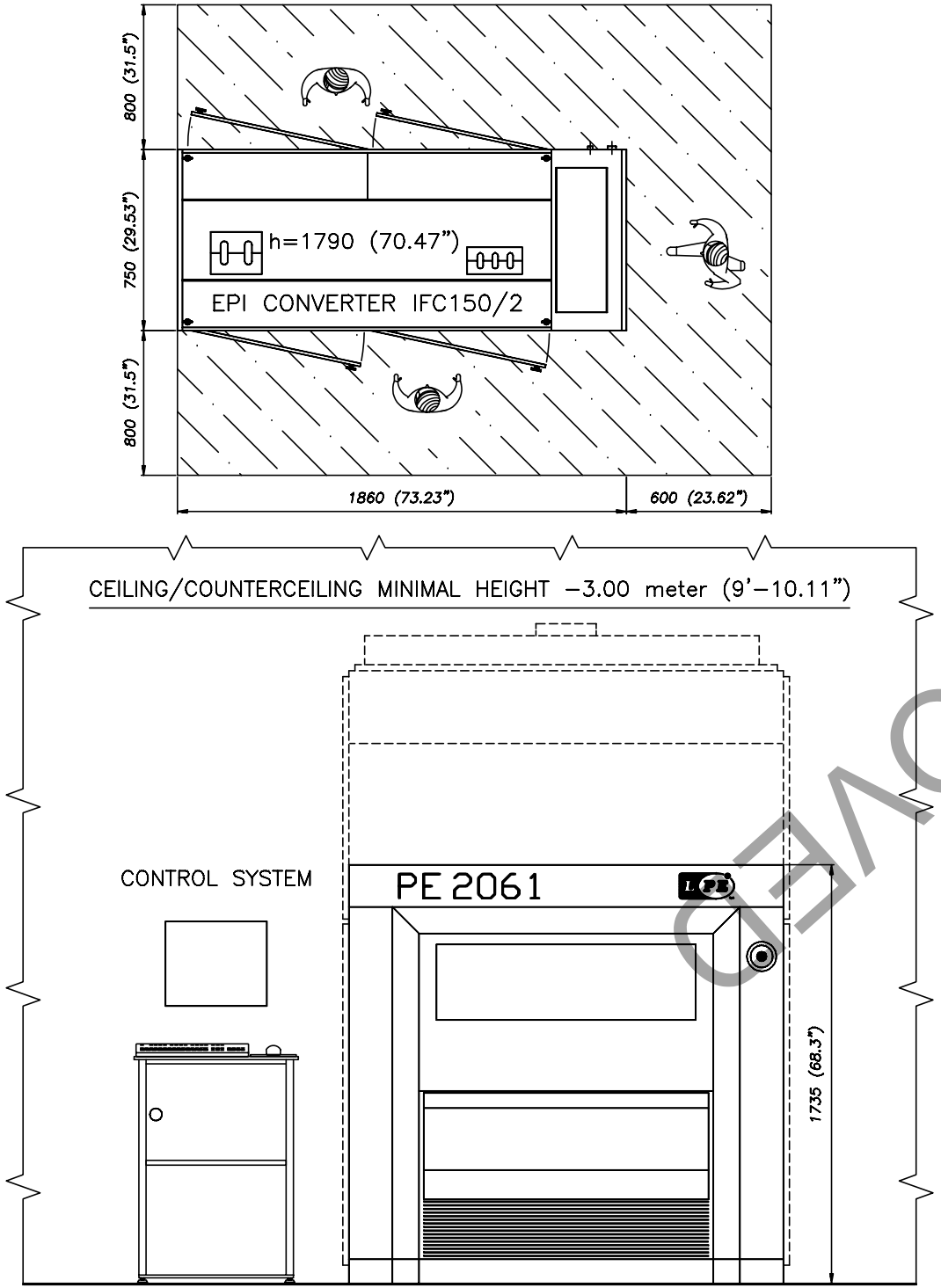

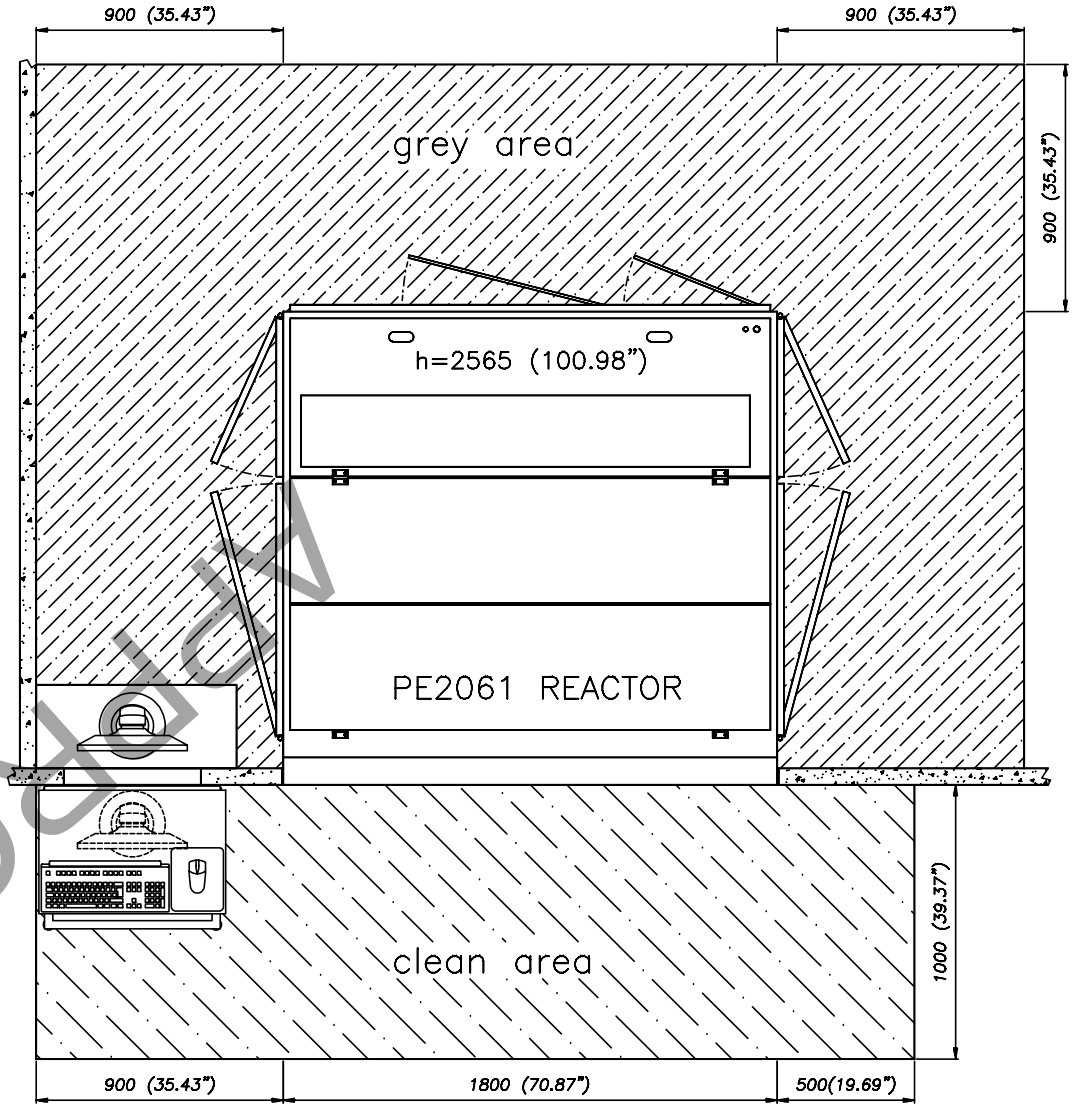

APPROVED

Note:
Dashed area represents the clearance for the opening of the equipment doors.
Local safety segnalations must be applied for safety distances

measure unit = mm

Item	Qty	Description	Code
Measure without indication of tollerance		Treatment	Material

Prepared by: Alfredo Zamboni	Checked by: V. Ogliari	Title: REACTOR PE 2061S ACCESS AREA	Sheet: 1/ 1
Original date: 15/07/2003	Checked by		Scale: 1:20
L PE SpA Powering the future	Approved by: D. Crippa	Order No / Dwg No: RH5250U12 / Section / Group	
	Latest rev: 03	CONFIDENTIAL — This document and data disclosed herein is not to be reproduced used or disclosed in whole or in part to anyone without the permission of LPE S.p.A.	

Modification description	Date	Prepared by
Cambiato tavolo in sala grigia	18/07/2005	A. Zamboni

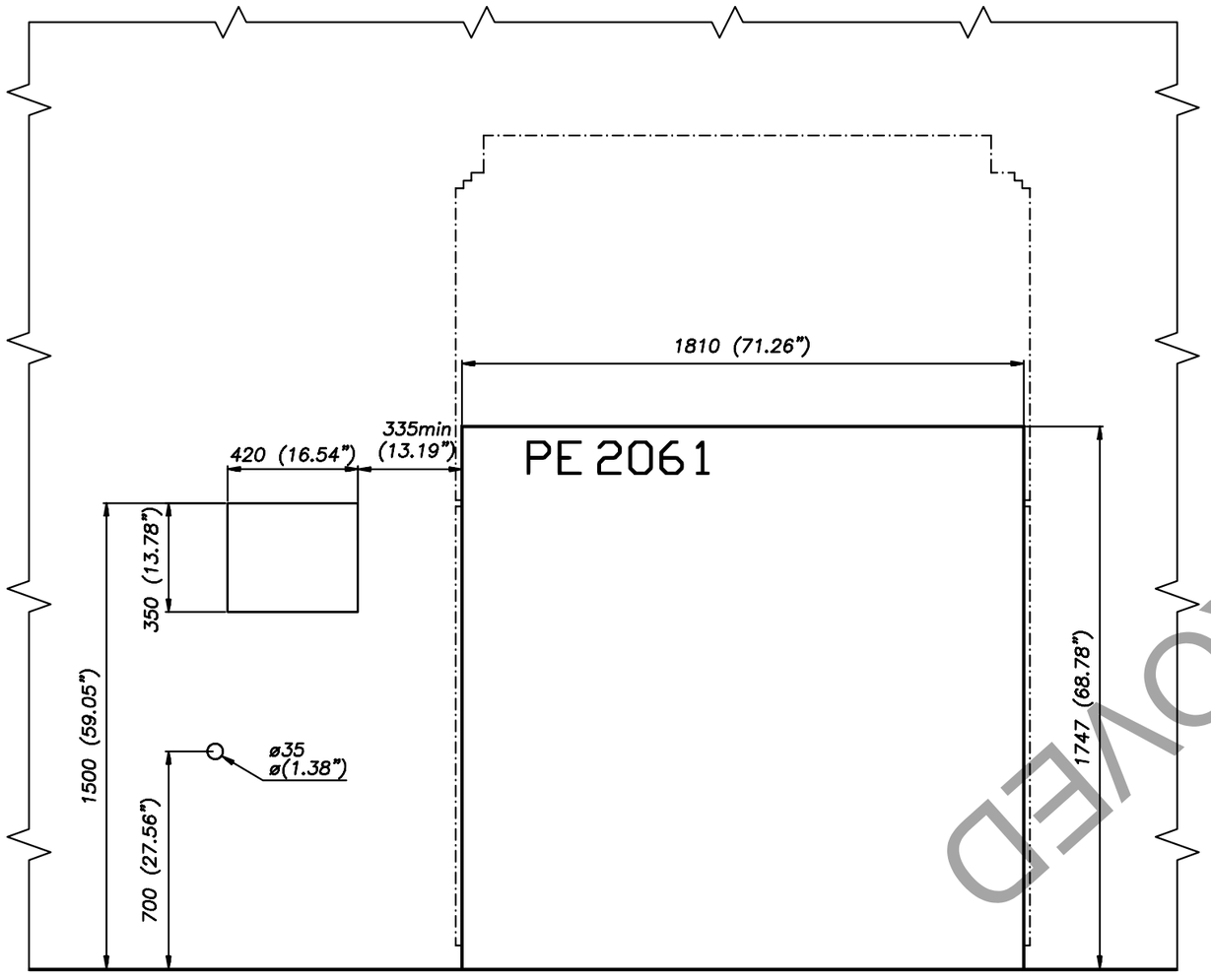

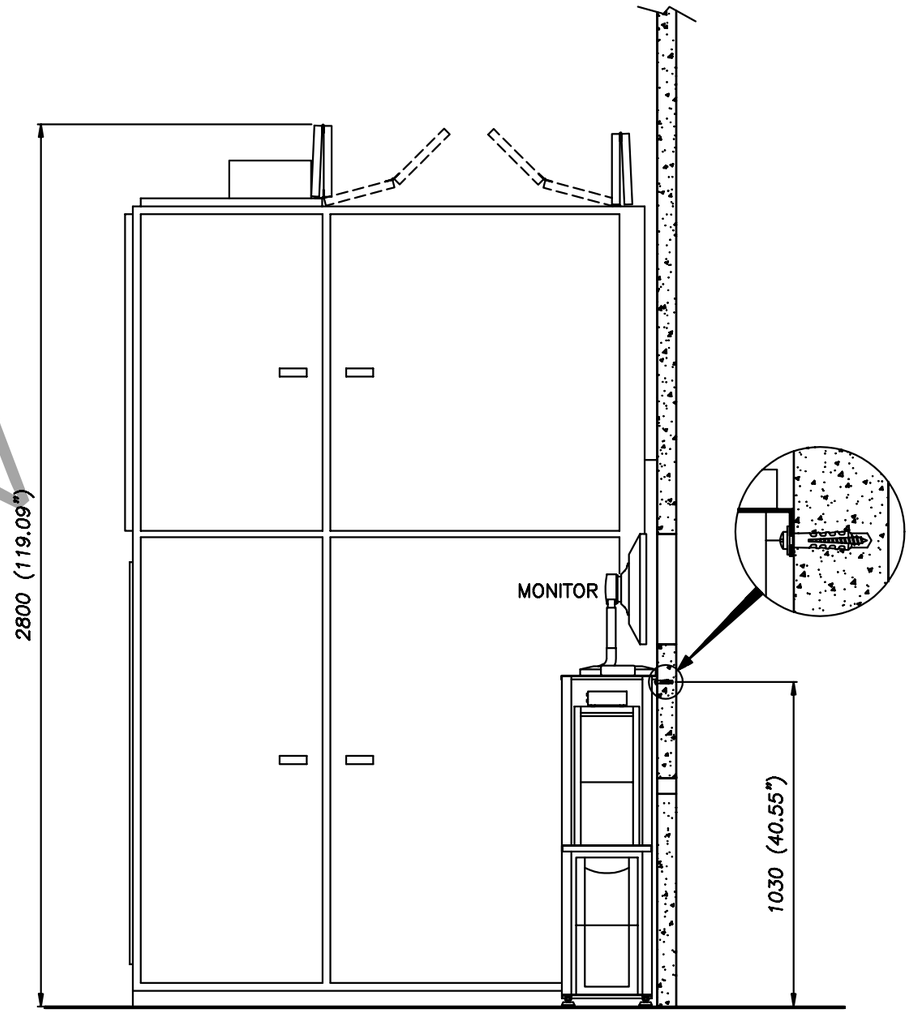

FRONT PANEL CUT OUT FROM CLEAN ROOM

APPROVED

measure unit = mm

Item	Qty	Description	Code

Measure without indication of tollerance		Treatment	Material
Prepared by: Alfredo Zamboni	Checked by: V. Ogliari	Title: REACTOR PE 2061S PANEL CUT OUT	Sheet: 1/1
Original date: 12/06/2002	Checked by:		Scale: 1:20
LPE SpA Powering the future	Approved by: D. Crippa	Order No:	Dwg No: RH5250U13
	Latest rev: 05		Section: / Group:

CONFIDENTIAL This document and data disclosed herein is not to be reproduced used or disclosed in whole or in part to anyone without the permission of LPE S.p.A.

Modification description	Date	Prepared by
Versione conpannelli superiori a libro	19/10/2005	A. Zamboni

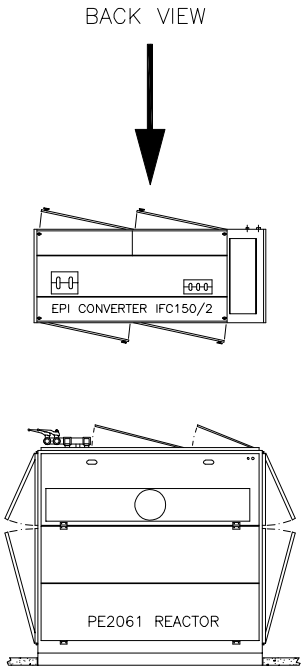

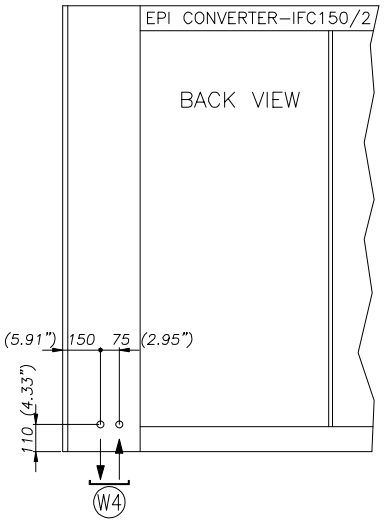

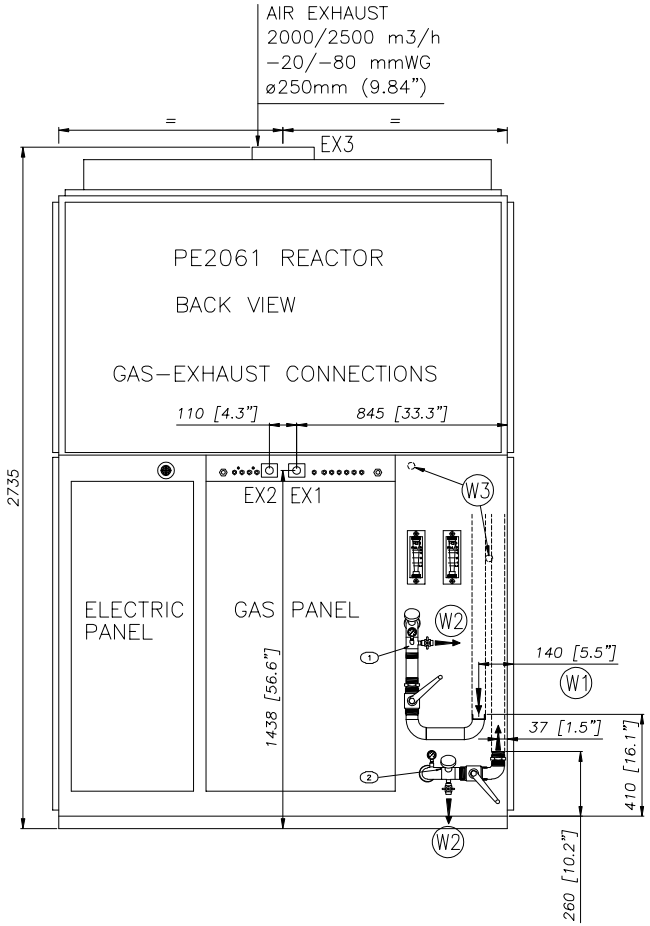

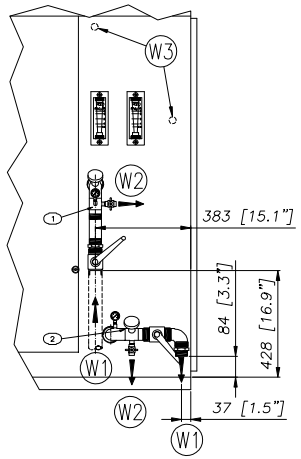

NOTE: BSP fem./NPT male
Conversions are supplied on request

WATER CONNECTIONS PE 2061S			
POS	SIZE	TYPE	FLOW
W1	1 1/2" BSP fem.	COOLING WATER SOFTENED	120–200 l/min
W2	3/8 BSP fem.	DRAIN	
W3	1/2" BSP fem.	EMERGENCY CITY WATER	50 l/min (optional)
W4	3/4" BSP fem.	COOLING WATER SOFTENED	20÷40 l/min

Modification description	Date	Prepared by
General update	23/06/2010	A. Zamboni

Item	Qty	Description	Code

Measure without indication of tollerance | Treatment | Material

Prepared by: Alfredo Zamboni
Checked by: V. Ogliari
Checked by: N.S
Approved by: D. Crippa
Original date: 19/03/2003
Latest rev: 05

Title: WATER/AIR EXHAUST CONNECTING POINTS
REACTOR PE 2061S

Sheet: 1/ 1
Scale: 1:20

Order No | Dwg No: RH5250U14 | Section | Group

LPE SpA — Powering the future

CONFIDENTIAL This document and data disclosed herein is not to be reproduced used or disclosed in whole or in part to anyone without the permission of LPE S.p.A.

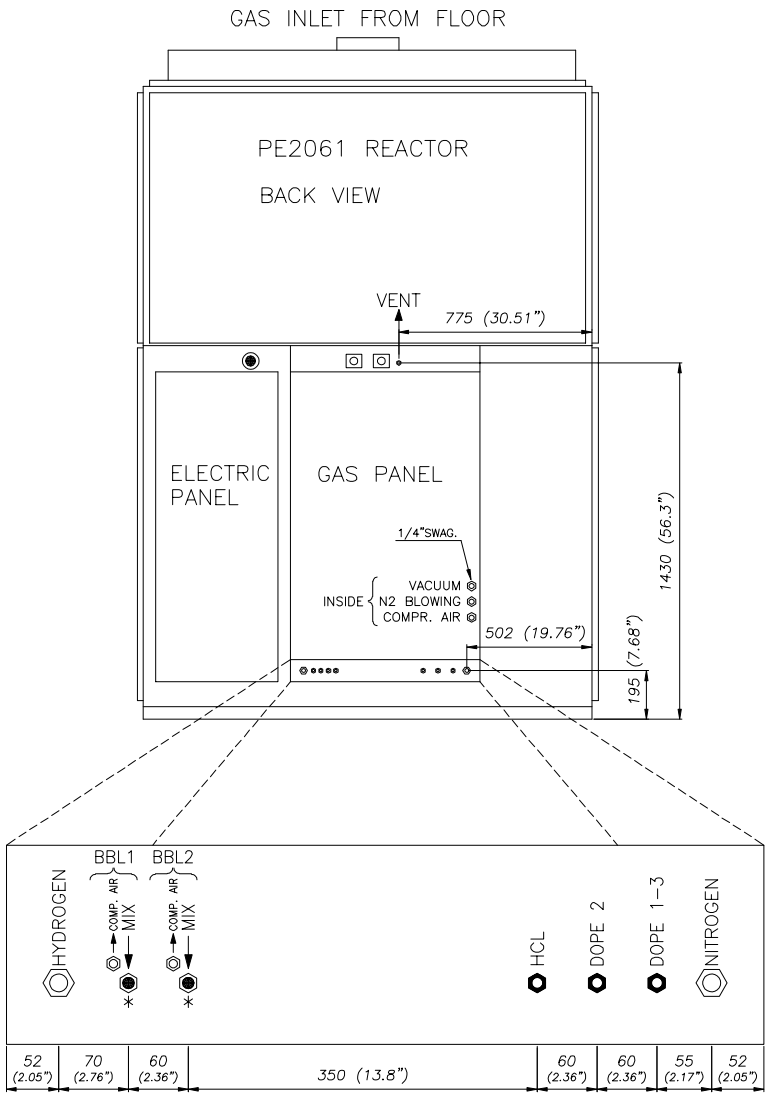

GAS CONNECTION DETAIL

3/8 VCR female
1/4 SWAGELOK male
1/4 VCR male
1/4 VCR female

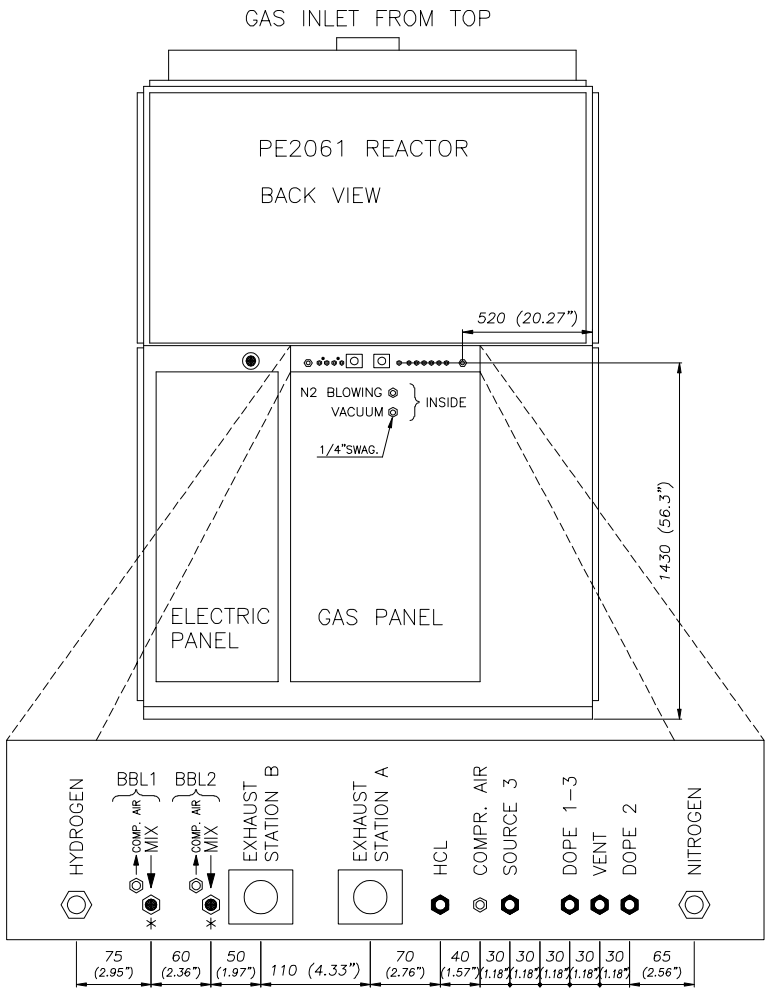

GAS CONNECTION DETAIL

3/8 VCR female
1/4 SWAGELOK male
1/4 VCR male
1/4 VCR female

On request (* =3/8 VCR female)

Item	Qty	Description	Code

Measure without indication of tollerance	Treatment	Material

Prepared by	Checked by	Title	Sheet
Alfredo Zamboni	V. Ogliari	GAS CONNECTION REACTOR PE 2061S	1/ 1
Original date 26/03/2001	Checked by N.S		Scale 1:20
	Approved by D. Crippa	Order No / Dwg No RH5250U15 / Section / Group	
Powering the future	Latest rev 02	CONFIDENTIAL	

This document and data disclosed herein is not to be reproduced used or disclosed in whole or in part to anyone without the permission of LPE S.p.A.

Modification description	Date	Prepared by
General update	23/06/2010	A. Zamboni

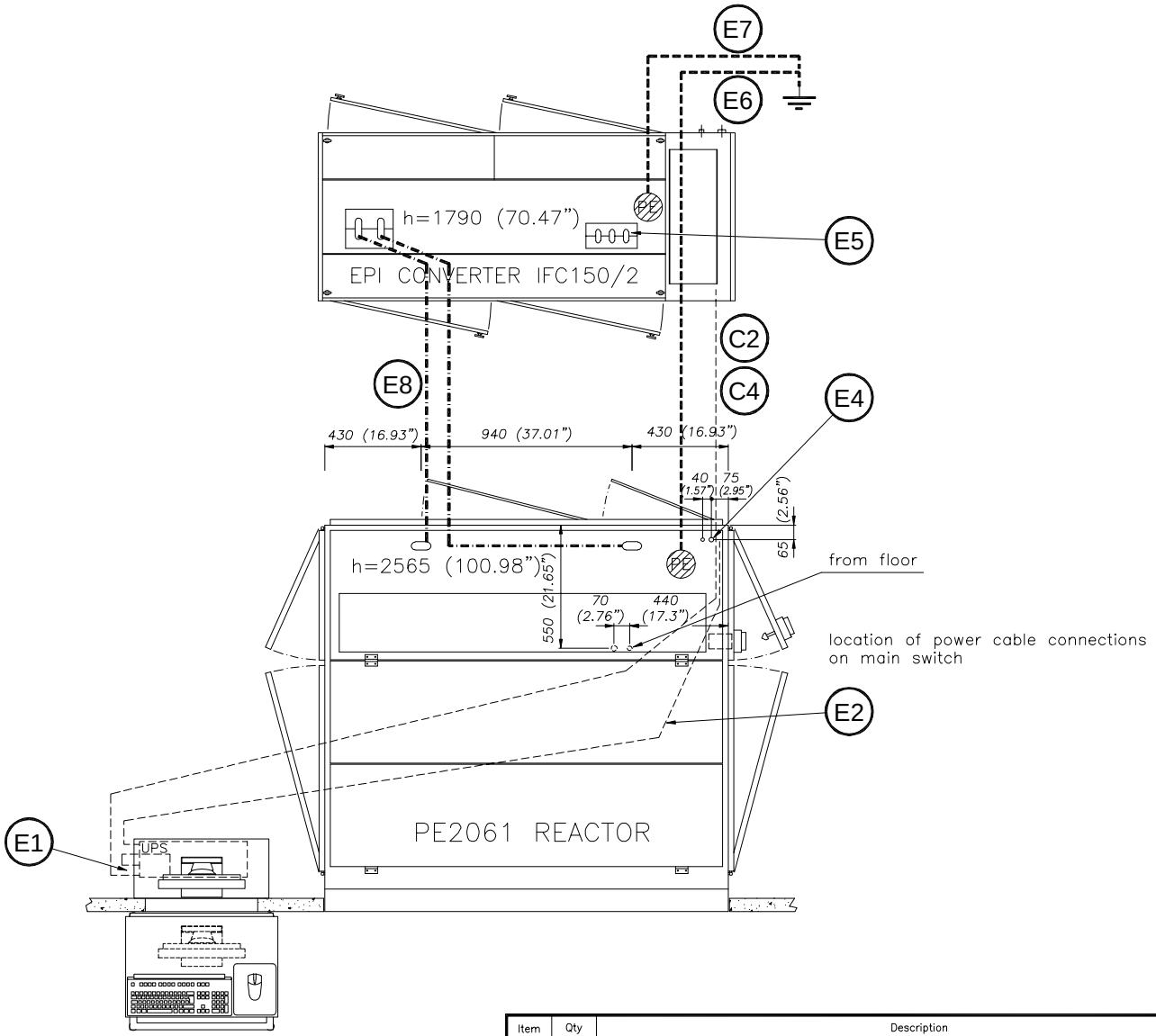

measure unit = mm

Item	Qty	Description	Code
Measure without indication of tollerance		Treatment	Material

Prepared by: Alfredo Zamboni	Checked by: V. Ogliari	Title: ELECTRICAL CONNECTIONS REACTOR PE 2061S	Sheet: 1/ 1
Original date: 17/04/2002	Checked by: N.S		Scale: 1:20
LPE SpA Powering the future	Approved by: D. Crippa	Order No / Dwg No: RH5250U16 / Section / Group	
	Latest rev: 03	CONFIDENTIAL	This document and data disclosed herein is not to be reproduced used or disclosed in whole or in part to anyone without the permission of LPE S.p.A.

Modification description	Date	Prepared by
General update	23/06/2010	A. Zamboni

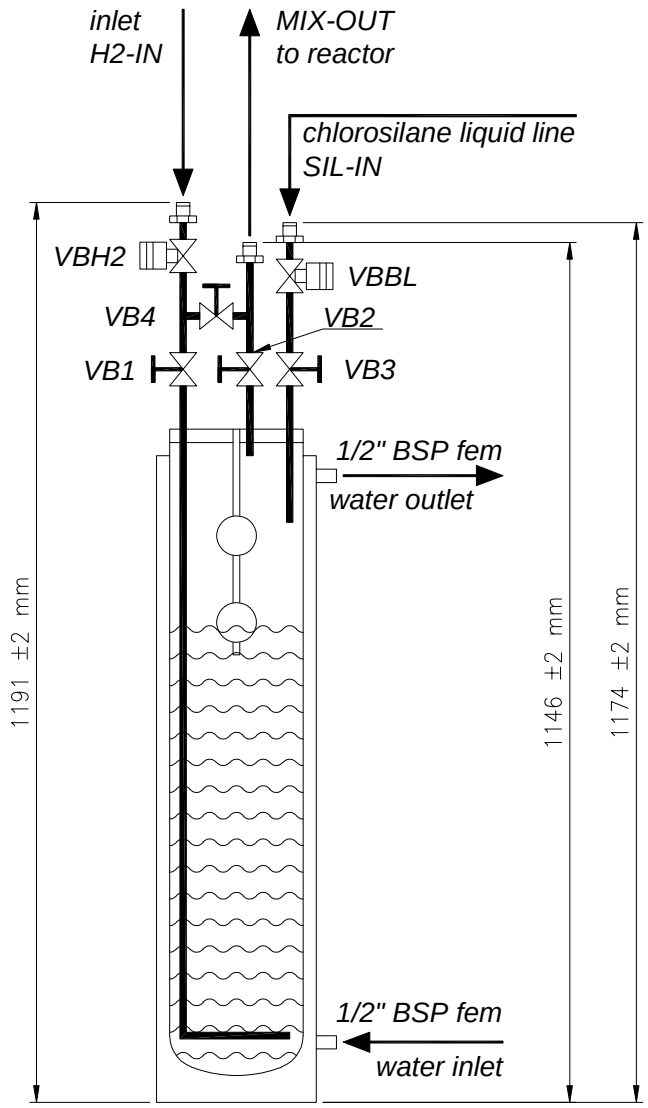

Internal cabinet size - minimal
300 x 300 mm footprint
1500 mm height

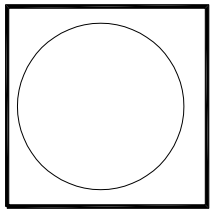

Prepared by	Date	Modification description
Sis.ma	05/09/2013	Rev.03: added informations about valves and vcr connections

-VB1, VB2, VB3, VB4: VALVE CODE VA0025

-VBH2, VBBL: VALVE CODE VA0410

bellow pneumatic valve N.C. | *manual packless valve - 1/4 turn* | *VCR male 1/4*

Item	Qty	Description	Code

Measure without indication of tollerance	Treatment	Material

Prepared by	Checked by	Title	Sheet
Alfredo Zamboni	V.O.	CHLOROSILANE BUBBLER Minispeed model 4 liters – Std model 14 liters Code N° 16G701 Code N° 16G702	1/ 1
Original date 17/04/2002	Checked by N.S.		Scale 1:1
Approved by D.C.		Order No / Dwg No RE4196 / Section / Group	
Latest rev 03			

LPE SpA Powering the future

CONFIDENTIAL

This document and data disclosed herein is not to be reproduced used or disclosed in whole or in part to anyone without the permission of LPE S.p.A.

Project: SCHEMATIC WIRING MACHINE
400Vac 3PH+N 230Vac 1PH+N F=50Hz

Drawing RH4847E4

Customer LPE Epitaxial Technology

CONFIDENTIAL

This document and data disclosed herein is not to be reproduced used or disclosed in whole or in part to anyone without the permission of LPE Epitaxial Technology

Epitaxial Technology

LPE Epitaxial Technology S.p.a
Via Falzarego, 8 - 20021 Baranzate (MI)
Tel. 02-3834151 Fax 02-38306118
e-mail: info@lpe-epi.com

0	FIRST EMISSION	30/01/2003	Borgonovo	Vismara		Crippa
1	GENERAL UPGRADE	13/07/2004	Adecco	Maccalli		Crippa
2	GENERAL UPGRADE	01/06/2005	Napoli	Maccalli		Crippa
3	THIRD EMISSION	09/03/2007	Borgonovo	Maccalli		Crippa
4	MDT 606	24/07/2008	Proserpio	Maccalli		Crippa
5	MDT 928	11/03/2011	Senno	Bonanno		Crippa
6	MDT	08/04/2011	Senno	Bonanno		Crippa
7	MDT1259	04/12/2012	Crivelli	Specker		Crippa
8	MDT 1883	23/02/2015	Crivelli	Specker	Crivelli	Crippa
Rev.	Revision description	Date	Prepared	Checked	Prog. Leader	Approved

IEC SYMBOLS

CONFIDENTIAL This document and data disclosed herein is not to be reproduced used or disclosed in whole or in part to anyone without the permission of LPE Epitaxial Technology

THIS PAGE HAS BEEN INTENTIONALLY LEFT BLANK

REV	MODIFY	DATE	SIGNAT.	APPROVED	Crippa
8	MDT 1883	23/02/2015	Crivelli	CHECKED	Specker
1	GENERAL UPGRADE	13/07/2004	Adecco	REV.	Crivelli
0	FIRST EMISSION	30/01/2003	Borgonovo	DATE	30/01/2003

TITLE (SPARE)

SUBTITLE

CUSTOMER LPE Epitaxial Technology

PROJECT SCHEMATIC WIRING MACHINE
400Vac 3PH+N 230Vac 1PH+N F=50Hz

DIS.: Borgonovo

RH4847E4

VALIDITY FROM TO

SHEET 002

NEXT 003

IEC SYMBOLS

CONFIDENTIAL
This document and data disclosed herein is not to be reproduced
used or disclosed in whole or in part to anyone without the permission of LPE Epitaxial Technology

Symbol code
(prefix - page - column - line)

Material location

Material
internal code

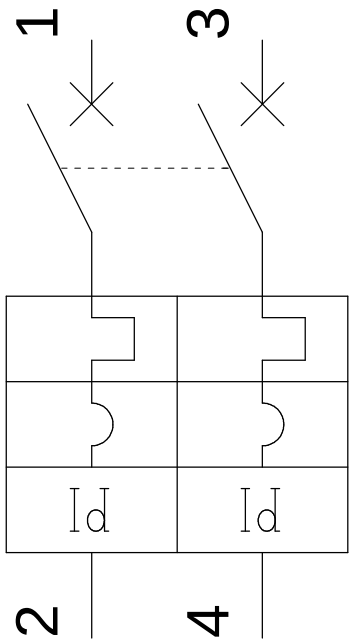

Description

Pin n°

Switch setting
or nominal power device

				DATE	30/01/2003
0	FIRST EMISSION	30/01/2003	Borgonovo	REV.	Crivelli
8	MDT 1883	23/02/2015	Crivelli	CHECKED	Specker
REV	MODIFY	DATE	SIGNAT.	APPROVED	Crippa

LPE

TITLE LEGEND
SUBTITLE SYMBOL CODING METHOD
CUSTOMER LPE Epitaxial Technology

PROJECT SCHEMATIC WIRING MACHINE
400Vac 3PH+N 230Vac 1PH+N F=50Hz

VALIDITY
FROM TO

DIS.: Borgonovo

RH4847E4

SHEET 003
NEXT 003

IEC SYMBOLS

CONFIDENTIAL This document and data disclosed herein is not to be reproduced used or disclosed in whole or in part to anyone without the permission of LPE Epitaxial Technology

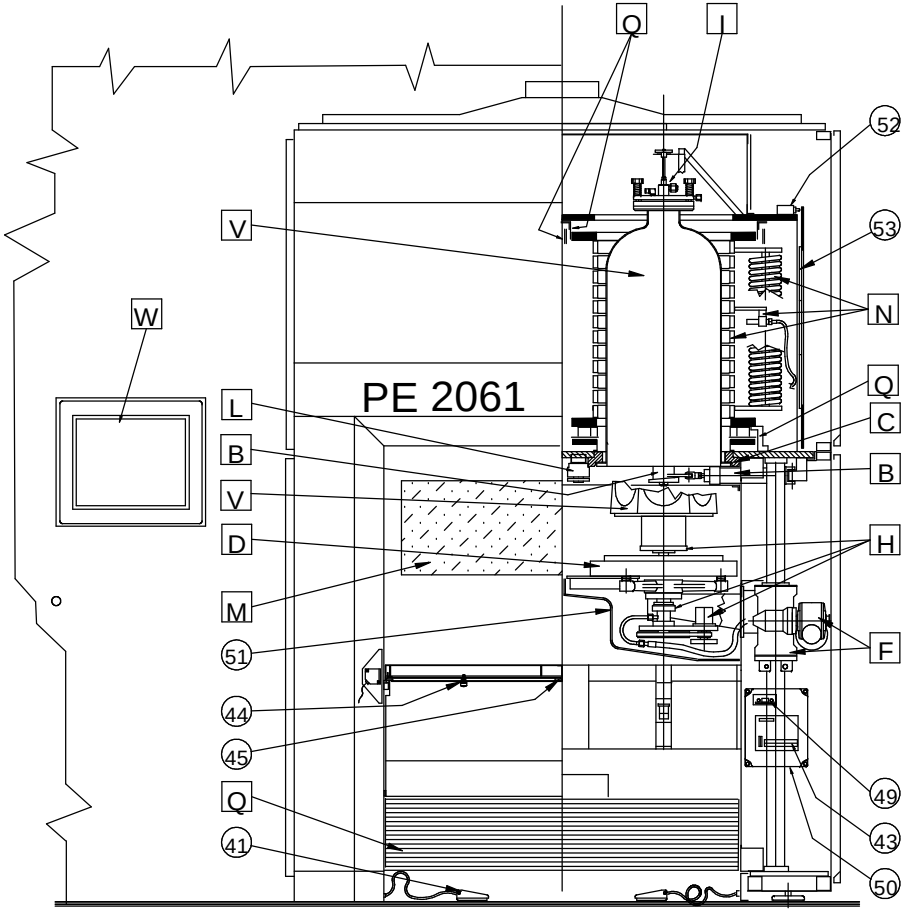

FRONT VIEW (41/60)

ITEM DESCRIPTION

SEE PAGE	ITEM	Q.ta	DESCRIPTION	CODE
39	**41**	**2**	**FOOT SWITCH**	**IN0059**
38	**43**	**1**	**DIGITAL INPUT CONNECTION CARD**	**See Item 23**
-	44	1+1	TEFLON BUSH FOR QUARTZ-GUARD	RH4823P4
-	45	1	QUARTZ-GUARD TEFLON SLIDING BLOCKS (8 PIECES KIT)	RH4823G1
40	**49**	**1+1**	**CLAMP PREAMPLIFIER PC BOARD**	**SZ0174**
-	50	1+1	BOX dwg RH4520	-
-	51	1+1	TURN PLATE GROUP PROTECTION CARTER dwg RE3945	04M228
-	52	2	TURN PLATE GROUP PROTECTION CARTER dwg RE3945	See Item 27
-	53	3+3	QUARTZ WINDOW FOR REACTOR DOOR	WQ0040

GROUPS DESCRIPTIONS

SEE PAGE	ITEM	DESCRIPTION
-	B	LOCKER GROUP
-	C	RING & UPPER PLATE GROUP
-	D	SHUTTER PLATE GROUP
31	**F**	**LIFTING & LIFTING-MOTOR GROUP**
26	**H**	**TURN PLATE & MOTOR-FLYWEEL GROUP**
-	L	EXHAUST GAS VALVE GROUP
-	M	WINDER GROUP
-	N	INDUCTION COIL 16" & MF CAPACITOR GROUP PYROMETER& OPTICAL FIBER GROUP
-	Q	AIR GROUP
-	V	QUARTZ & GRAPHITE STUFFS
11	**W**	**ELECTRONIC CONTROL PANEL GROUP**

				DATE	30/01/2003
				REV.	Borgonovo
0	FIRST EMISSION	30/01/2003	Borgonovo	CHECKED	Vismara
REV	MODIFY	DATE	SIGNAT.	APPROVED	Crippa

LPE

TITLE FRONT VIEW
SUBTITLE
CUSTOMER LPE Epitaxial Technology

PROJECT SCHEMATIC WIRING MACHINE
400Vac 3PH+N 230Vac 1PH+N F=50Hz

DIS.: Borgonovo

RH4847E4

VALIDITY
FROM TO

SHEET 004
NEXT 005

IEC SYMBOLS

CONFIDENTIAL This document and data disclosed herein is not to be reproduced used or disclosed in whole or in part to anyone without the permission of LPE Epitaxial Technology

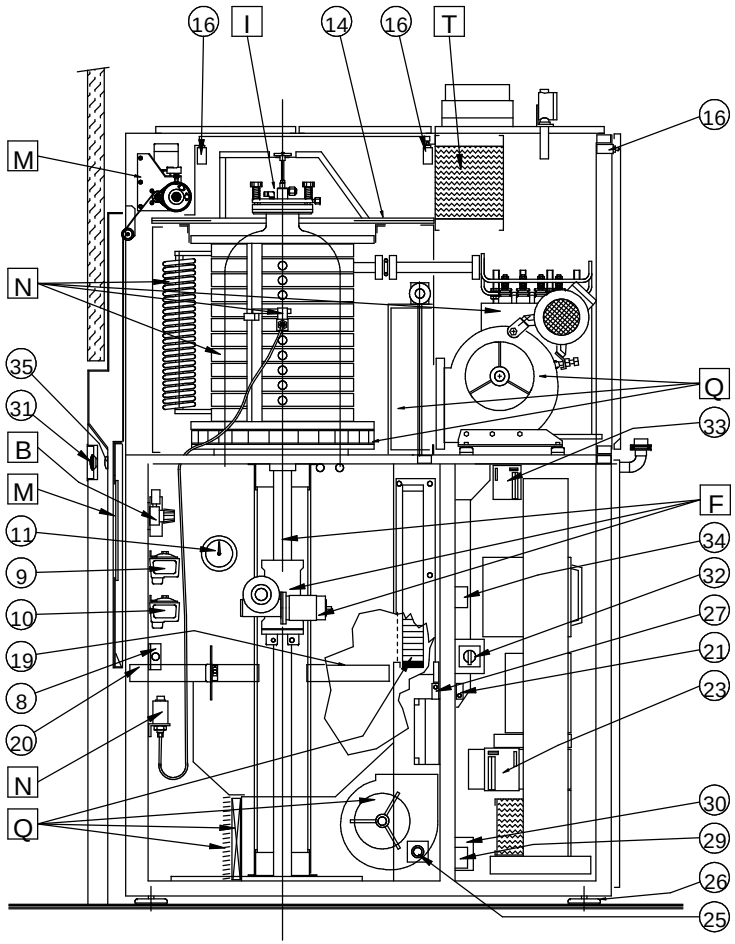

RIGHT VIEW (1/40)

ITEM DESCRIPTIONS

SEE PAGE	ITEM	Q.ta	DESCRIPTION	CODE
15	8	1	SHILD SAFETY PHOTOCELL RECEIVER	OE0100
38	9	1	PRESSURE SWITCH WARNING STATION B	PQ0001
38	10	1	PRESSURE SWITCH ALARM STATION B	See Item 9
-	11	1+1	VACUUM GAUGE WIKA+/-20mbar diam 100mm	MN0612
-	14	1+1	UPPER INSULATING PLATE	RH4812P6
38	16	6	MICROSWITCH DOORS UPPER STATION	IN0315
-	19	1	REAR DESK (FIXED)	RH4819G2
-	20	1	FRONT DESK (REMOVABLE)	RH4819G1
36	21	1	MICROSWITCH FOR ELECTRONICS CABINET SIDE DOOR	IN0065
36	23	1	DIGITAL INPUT CONECTION CARD	SZ8201
12	25	1	VELOCITY REGULATOR FOR LAMINAR FLOW BLOWER (50Hz/60Hz)	EM1431/EM1430
-	26	4	REACTOR SUPPORTING POINTS	EC0023
39	27	1	SAFETY SWITCH FOR LIFT INIBIT (STATION B)	-
11	29	1	NOISE FILTER 220V	AC0100
11	30	1	NOISE FILTER 480V	AC0104
13	31	1	EMERGENCY PUSH-BUTTON (FRONT)	-
11	32	1	MAIN SWITCH	IN0272
37	33	1	CONNECTION CARD (OPTIONAL)	SZ8211
43	34	1	EMERGENCY WATER BOX (OPTIONAL)	-
20	35	1	BUZZER	OA0016

GROUPS DESCRIPTIONS

SEE PAGE	ITEM	DESCRIPTION
-	B	LOCKER GROUP
-	C	RING & UPPER PLATE GROUP
-	D	SHUTTER PLATE GROUP
31	F	LIFTING & LIFTING-MOTOR GROUP
26	H	TURN PLATE & MOTOR-FLYWEEL GROUP
-	L	EHXAUST GAS VALVE GROUP
31	M	WINDER GROUP
-	N	INDUCTION COIL 16" & MF CAPACITOR GROUP
12	Q	AIR GROUP (MAIN BLOWER)

				DATE	30/01/2003
				REV.	Borgonovo
0	FIRST EMISSION	30/01/2003	Borgonovo	CHECKED	Vismara
REV	MODIFY	DATE	SIGNAT.	APPROVED	Crippa

LPE

TITLE RIGHT VIEW
SUBTITLE
CUSTOMER LPE Epitaxial Technology

PROJECT SCHEMATIC WIRING MACHINE
400Vac 3PH+N 230Vac 1PH+N F=50Hz

DIS.: Borgonovo

RH4847E4

VALIDITY
FROM TO

SHEET 005
NEXT 006

IEC SYMBOLS

CONFIDENTIAL This document and data disclosed herein is not to be reproduced used or disclosed in whole or in part to anyone without the permission of LPE Epitaxial Technology

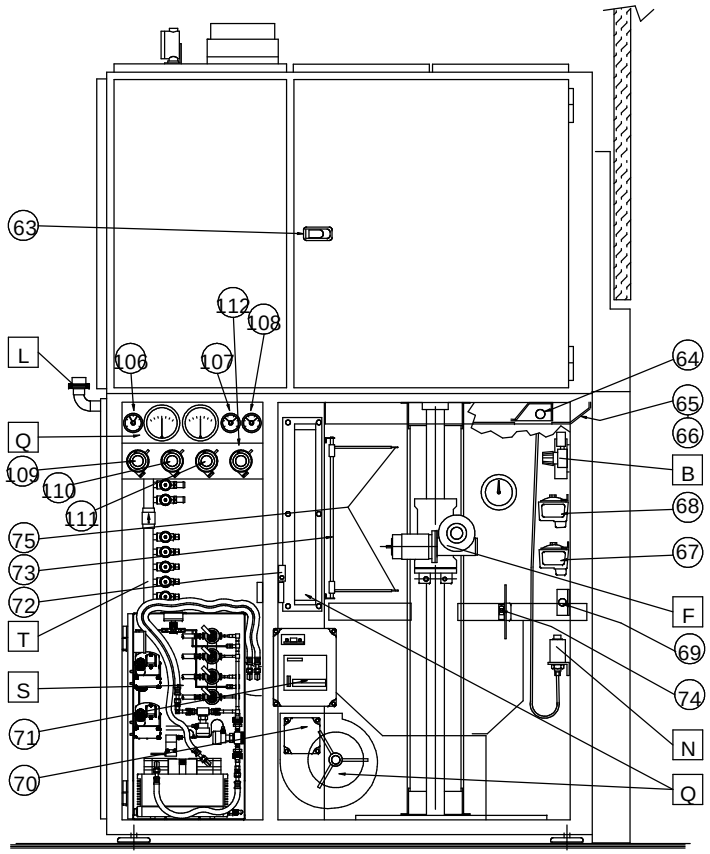

LEFT VIEW (61/75)

ITEM DESCRIPTIONS				
SEE PAGE	ITEM	Q.ty	DESCRIPTION	CODE
-	63	6	PADDLE LATCHES mod.C2-33-15	EC0030
22	64	2	LAMP DELUX EL-18W (Osram)	OA0003
-	65	1	UPPER SHIELD STATION A	RH4821P2-P5
-	66	1	UPPER SHIELD STATION B	RH4821P4-P6
39	67	1	PRESSURE SWITCH ALARM STATION A	See Item 9
39	68	1	PRESSURE SWITCH WARNING STATION A	See Item 9
15	69	1	SHIELD SAFETY PHOTOCEL EMITTER (with tem 8)	-
43	70	1	EMERGENCY WATER BOX (OPTIONAL)	-
39	71	1	DIGITAL INPUT CONNECTION CARD	See ItEm 23
39	72	1	SAFETY SWITCH FOR LIFT INIBIT (STATION A)	See Item 27
-	73	1	SUSCEPTOR CENTERING EQUIPMENT	RH4658G0
39	74	1+1	QUARTZ-GUARD SAFETY PHOTOCELL	OE0101
-	75	1	POINTS FOR CENTERING EQUIPMENT (2 PIECES KIT)	RH4658G1
39	106	1	THERMAL SWITCH AIR	TM0025
43	107	1	THERMAL SWITCH AIR A	TM0031
43	108	1	THERMAL SWITCH AIR B	TM0031
36	109	1	SPOILER PRESSURE SWITCH	PQ0515
36	110	1	LAMINAR FLOW PRESSURE SWITCH	PQ0516
36	111	1	EXHAUST AIR VACUUM SWITCH	PQ0515
38	112	1	COOLING AIR PRESSURE SWITCH	PQ0515

GROUPS DESCRIPTIONS		
SEE PAGE	ITEM	DESCRIPTION
-	B	LOCKER GROUP
31	F	LIFTING & LIFTING-MOTOR GROUP
-	L	EXHAUST GAS VALVE GROUP
19	N	PYROMETER & OPTICAL FIBER GROUP
-	Q	AIR GROUP
12	S	VACUUM TEST GROUP (SCHEME), VACUUM TEST GROUP (LAY OUT)
39	T	WATER SCHEMATIC COOLING SYSTEM, WATER LAY OUT COOLING SYSTEM EMERGENCY WATER SCHEMATIC

0	FIRST EMISSION	30/01/2003	Borgonovo	DATE	30/01/2003
3	THIRD EMISSION	09/03/2007	Borgonovo	REV.	Proserpio
4	MDT 606	24/07/2008	Proserpio	CHECKED	Maccalli
REV	MODIFY	DATE	SIGNAT.	APPROVED	Crippa

LPE

TITLE LEFT VIEW
SUBTITLE
CUSTOMER LPE Epitaxial Technology

PROJECT SCHEMATIC WIRING MACHINE
400Vac 3PH+N 230Vac 1PH+N F=50Hz

DIS.: Borgonovo

RH4847E4

VALIDITY
FROM TO

SHEET 006
NEXT 007

IEC SYMBOLS

CONFIDENTIAL

This document and data disclosed herein is not to be reproduced used or disclosed in whole or in part to anyone without the permission of LPE Epitaxial Technology

RH5200U1 SHEET 2/2

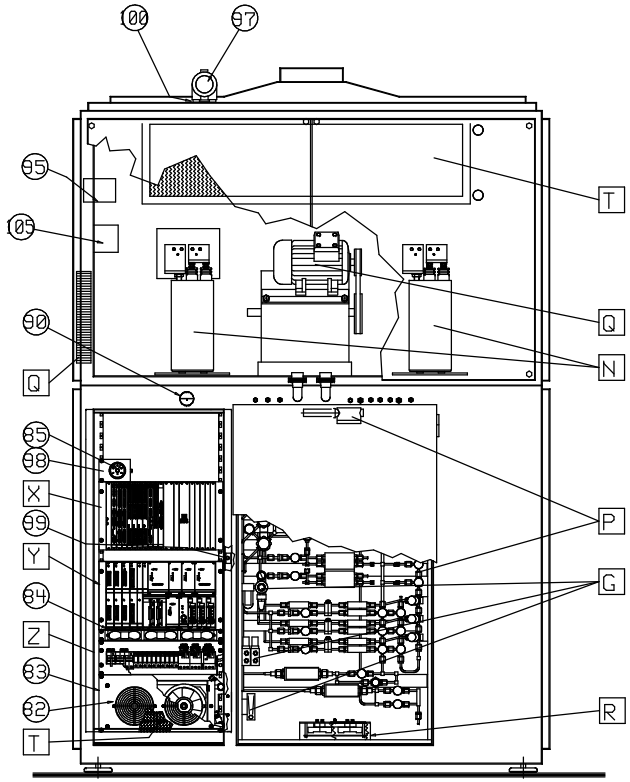

REAR VIEW (76/110)

ITEM DESCRIPTION

SEE PAGE	ITEM	Q.tà	DESCRIPTION	CODE
14	82	2	FANS	MV0143
-	83	1	FANS SUPPORTING PANEL	RH4825P6
14	84	1	FAN COOLING UNIT	CT0224
36	85	1	THERMAL SWITCH FOR CONTROL UNIT 0+60°C	TM0025
13	90	1	EMERGENCY PUSH-BUTTON (REAR)	See Item 31
-	95	1	ELECTRIC SUPPLY WIRES INLET BOX (LEGRAND 92252)	CT0251
24	97	1	HYDROGEN LEAK SENSOR FOR REACTOR FRAME	SI0311
-	98	1	THERMAL SWITCH SUPPORT	RH4825P4
36	99	1	MICROSWITCH FOR ELECTRONICS CABINET SIDE DOOR	See Item 21
-	100	1	HYDROGEN LEAK SENSING HEAD SUPPORT	RH4812P12
46	105	1	BOX FOR INTERNAL/EXTERNAL SERVICE	CT0249

GROUPS DESCRIPTION

SEE PAGE	ITEM	DESCRIPTION
-	G	PNEUMATIC SCHEME, COMPRESSED AIR INLET DISTRIBUTION
-	N	INDUCTION COIL 16" & MF CAPACITOR GROUP
-	P	GAS METERING SCHEME, GAS METERING LAY OUT
-	Q	AIR GROUP
28	R	ELECTROVALVES BOX GROUP
39	T	WATER SCHEMATIC COOLING SYSTEM, WATER LAY OUT COOLING SYSTEM
34	X	VME ELECTRONIC GROUP
16	Y	POWER SUPPLY / DRIVERS GROUP
10	Z	AC POWER INPUT / DRIVERS GROUP

IEC SYMBOLS

CONFIDENTIAL

This document and data disclosed herein is not to be reproduced used or disclosed in whole or in part to anyone without the permission of LPE Epitaxial Technology

RH6950G4

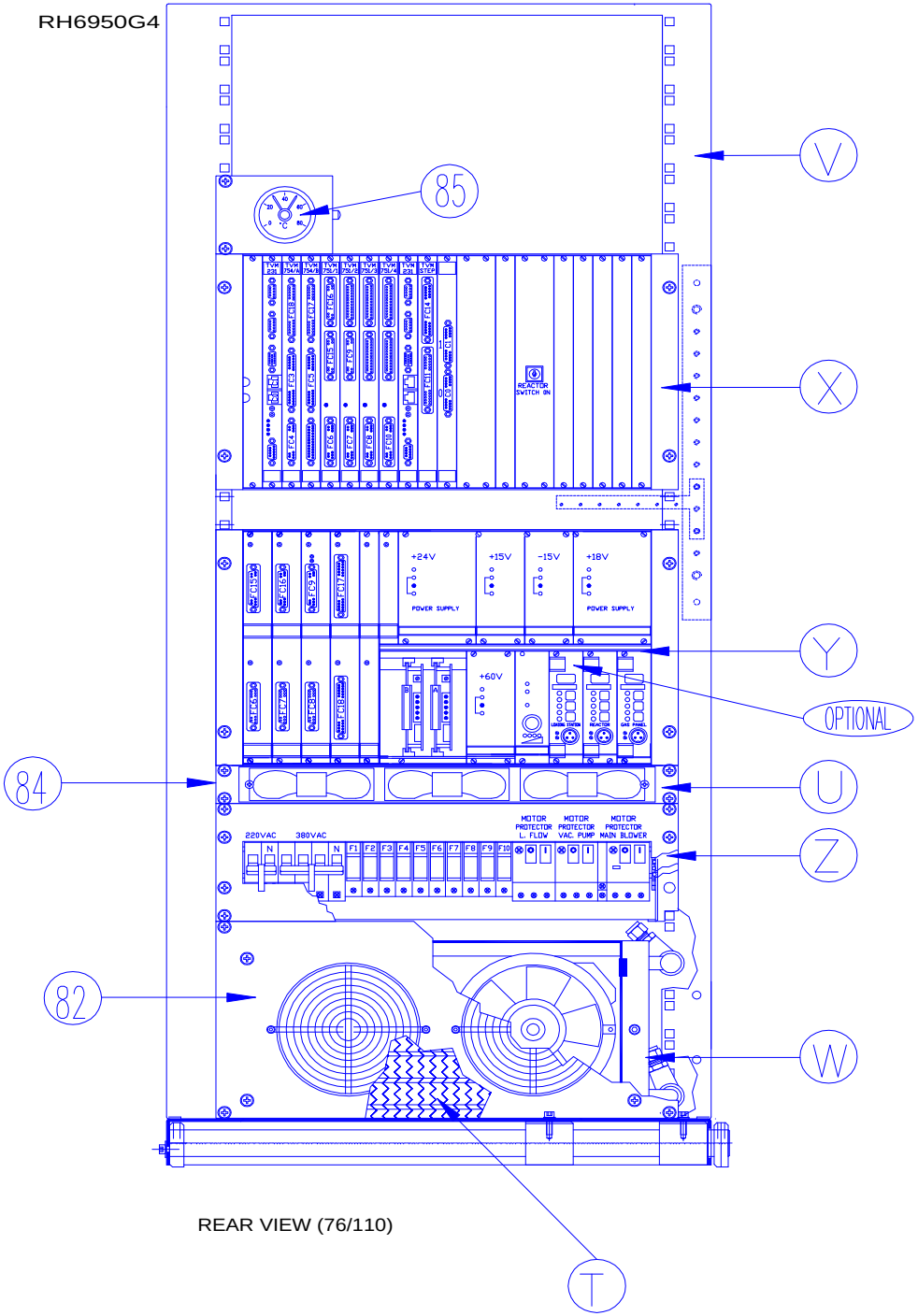

REAR VIEW (76/110)

ITEM DESCRIPTION

SEE PAGE	ITEM	Q.tà	DESCRIPTION	CODE
14	82	2	FANS	MV0143
-	83	1	FANS SUPPORTING PANEL	RH4825P6
14	84	1	FAN COOLING UNIT	CT0224
36	85	1	THERMAL SWITCH FOR CONTROL UNIT 0+60ØC	TM0025
-	98	1	THERMAL SWITCH SUPPORT	RH4825P4
-	99	1	MICROSWITCH FOR ELECTRONICS CABINET SIDE DOOR	See Item 21

GROUPS DESCRIPTION

SEE PAGE	ITEM	DESCRIPTION
39	T	WATER SCHEMATIC COOLING SYSTEM, WATER LAY OUT COOLING SYSTEM EMERGENCY WATER SCHEMATIC
34	X	VME ELECTRONIC GROUP
16	Y	POWER SUPPLY / DRIVERS GROUP
10	Z	AC POWER INPUT / DRIVERS GROUP
14	W	COOLING SYSTEM
14	U	FAN COIL UNIT
	V	ELECTRICAL FRAME

				DATE	30/01/2003
0	FIRST EMISSION	30/01/2003	Borgonovo	REV.	Proserpio
4	MDT 606	24/07/2008	Proserpio	CHECKED	Maccalli
REV	MODIFY	DATE	SIGNAT.	APPROVED	Crippa

LPE

TITLE ELECTRONIC RACK

SUBTITLE

CUSTOMER LPE Epitaxial Technology

PROJECT SCHEMATIC WIRING MACHINE
400Vac 3PH+N 230Vac 1PH+N F=50Hz

DIS.: Borgonovo

RH4847E4

VALIDITY FROM TO

SHEET 008

NEXT 009

IEC SYMBOLS

CONFIDENTIAL

This document and data disclosed herein is not to be reproduced used or disclosed in whole or in part to anyone without the permission of LPE Epitaxial Technology

RH4828G1

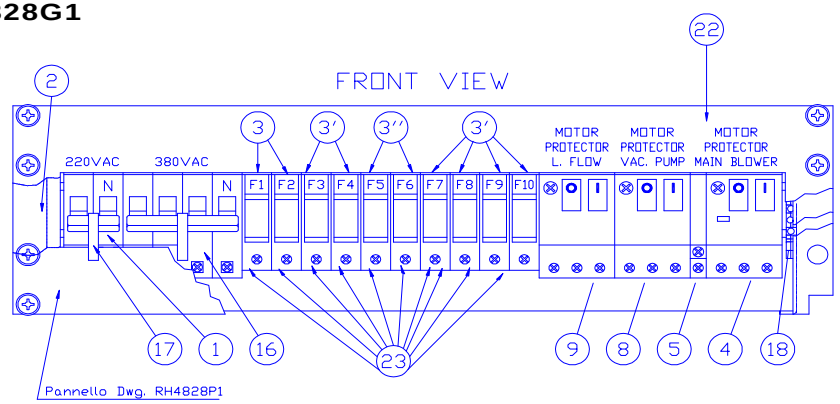

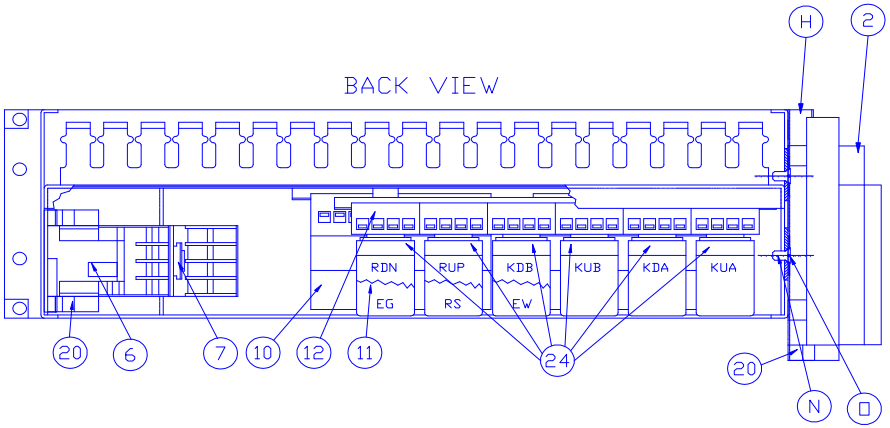

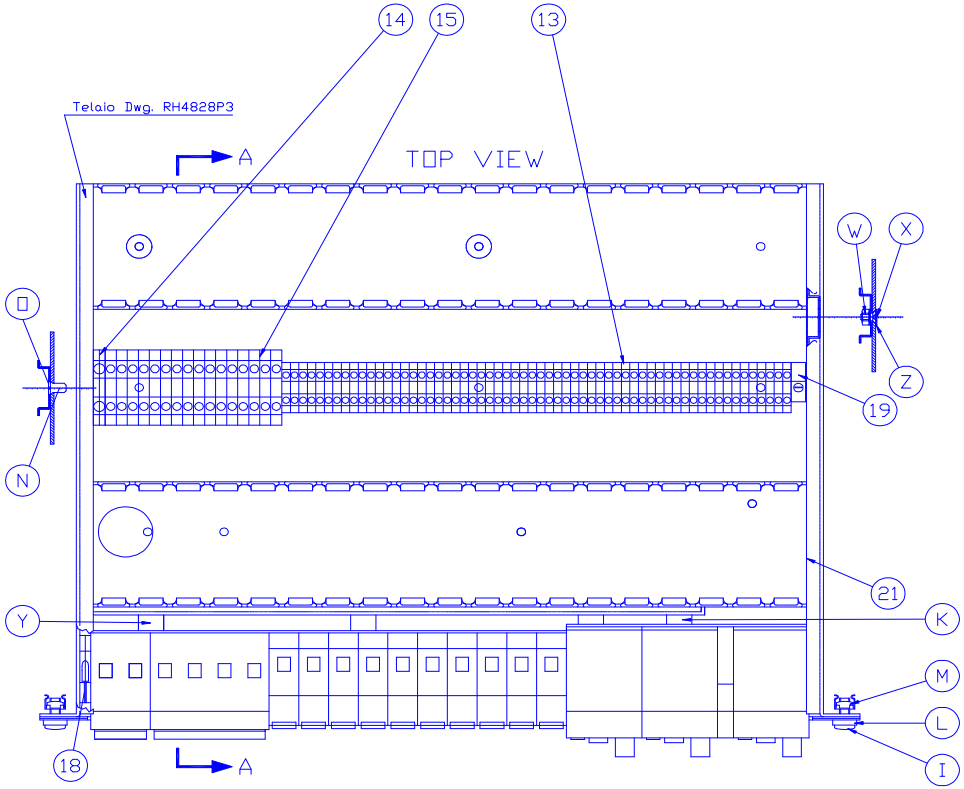

-	19	2	TERMINAL PLATE	CT0055
-	20	10	TERMINAL CLAMP EW35	CT0235
-	21	1	ASSEMBLY WELDED FRAME	RH4828P2
-	22	1	CLOSE PANEL RACK SWITCH	RH4828P6
13,14,15	23	10	FUSE HOLDER 10x38 1P 3NW7010	SI0100
30	24	10	DIODE	DI0027

ITEM DESCRIPTIONS

SEE PAGE	ITEM	Q.ta	DESCRIPTION	CODE
11	1	1	SWITCH 2x10A 5SX2210-7	IN0258
36,38,39	2	1	DIGITAL INPUT CONNECTION CARD TVM8201	SZ8201
14	3	2	FUSE 0.5 AM 10.3x38	SI0111
13,14,15	3'	6	FUSE 0.25 AM 10.3x38	SI0110
14	3"	2	FUSE 2A AM 10.3x38	SI0112
12	4	1	MOTOR PROTECTOR GV2-M14 6/10A	IN2910
12	5	1	AUX. CONTACT 10A GV2-AN11	IN2920
12	6	1	CONTACTOR LC D09-10 B7 24Vac	RL0045
14	7	1	AUX. CONTACT LA1-DN 40	IN0116
12	8	1	MOTOR PROTECTOR GV2-M5 0.63/1A	IN2911
12	9	1	MOTOR PROTECTOR GV2-M08- 2.5/4A	IN2912
13,15	10	2	TRANSFORMER 230/12-24 63VA TR10	EM0060
30	11	9	RELAY OCTAL MK2P 24Vdc	RL0015
30	12	9	BASE OCTAL PF083-E	RL0042
45	13	60	CONNECTOR SAKD 2.5N PA (021556) - XA1	CT0052
48	14	1	CONNECTOR LE37371	CT0102
44	15	16	CONNECTOR SAK2.5 (027966) - XT1	CT0236
11	16	1	SWITCH 4x20A 5SX2620-7	IN0256
-	17	2	PADLOCK HOLDER	IN0259
-	18	2	EARTH SOCKET LE 399371	CT0102

REV	MODIFY	DATE	SIGNAT.	APPROVED	Crippa
0	FIRST EMISSION	30/01/2003	Borgonovo	DATE	30/01/2003
1	GENERAL UPGRADE	13/07/2004	Adecco	REV.	Proserpio
4	MDT 606	24/07/2008	Proserpio	CHECKED	Maccalli

LPE

TITLE FRONT VIEW (Z)
SUBTITLE
CUSTOMER LPE Epitaxial Technology

PROJECT SCHEMATIC WIRING MACHINE
400Vac 3PH+N 230Vac 1PH+N F=50Hz

DIS.: Borgonovo

RH4847E4

VALIDITY
FROM TO

SHEET 009
NEXT 010

IEC SYMBOLS

CONFIDENTIAL This document and data disclosed herein is not to be reproduced used or disclosed in whole or in part to anyone without the permission of LPE Epitaxial Technology

SYMBOLE	DESCRIPTION	SYMBOLE	DESCRIPTION	SYMBOLE	DESCRIPTION	SYMBOLE	DESCRIPTION
	MOTOR PROTECTION SWITCH		POTENTIOMETER		TRANSFORMER		SOCKET+PLUG
	AUTOMATIC CIRCUIT BREAK	A1 A2	AUXILIARY RELAY (COIL)	FILTER	FILTER	U V PE M	MOTOR DC
	SIGNAL LED	13 14	EMERGENCY PUSH BUTTON	UPS	UPS		TEMPORIZATION RELAY
- +	BUZZER		CONTACTOR (POWER CONTACT NO)	WS	WORKSTATION		TEMPERATURE SENSOR
	AUXILIARY CONTACT NORMAL OPEN		AUTOMATIC CIRCUIT BREAK	U V W PE M 3~	MOTOR AC THREEPHASE		SIGNAL LAMP
	AUXILIARY CONTACT NORMAL CLOSED		THERMOSTAT	L N PE M 1~	MOTOR AC MONOPHASE	1 2 3(+) 4	MODULATING VALVE
T 1 2 3 4	FUSE HOLDER		VALVE	A1 A2	CONTACTOR (COOILING)		ISOLATOR

				DATE	30/01/2003	TITLE	SYMBOLS	PROJECT	SCHEMATIC WIRING MACHINE 400Vac 3PH+N 230Vac 1PH+N F=50Hz
				REV.	Borgonovo	SUBTITLE		VALIDITY FROM TO	
0	FIRST EMISSION	30/01/2003	Borgonovo	CHECKED	Vismara				
REV	MODIFY	DATE	SIGNAT.	APPROVED	Crippa	CUSTOMER	LPE Epitaxial Technology	DIS.: Borgonovo	RH4847E4
									SHEET 010 NEXT 010

IEC SYMBOLS

CONFIDENTIAL

This document and data disclosed herein is not to be reproduced used or disclosed in whole or in part to anyone without the permission of LPE Epitaxial Technology

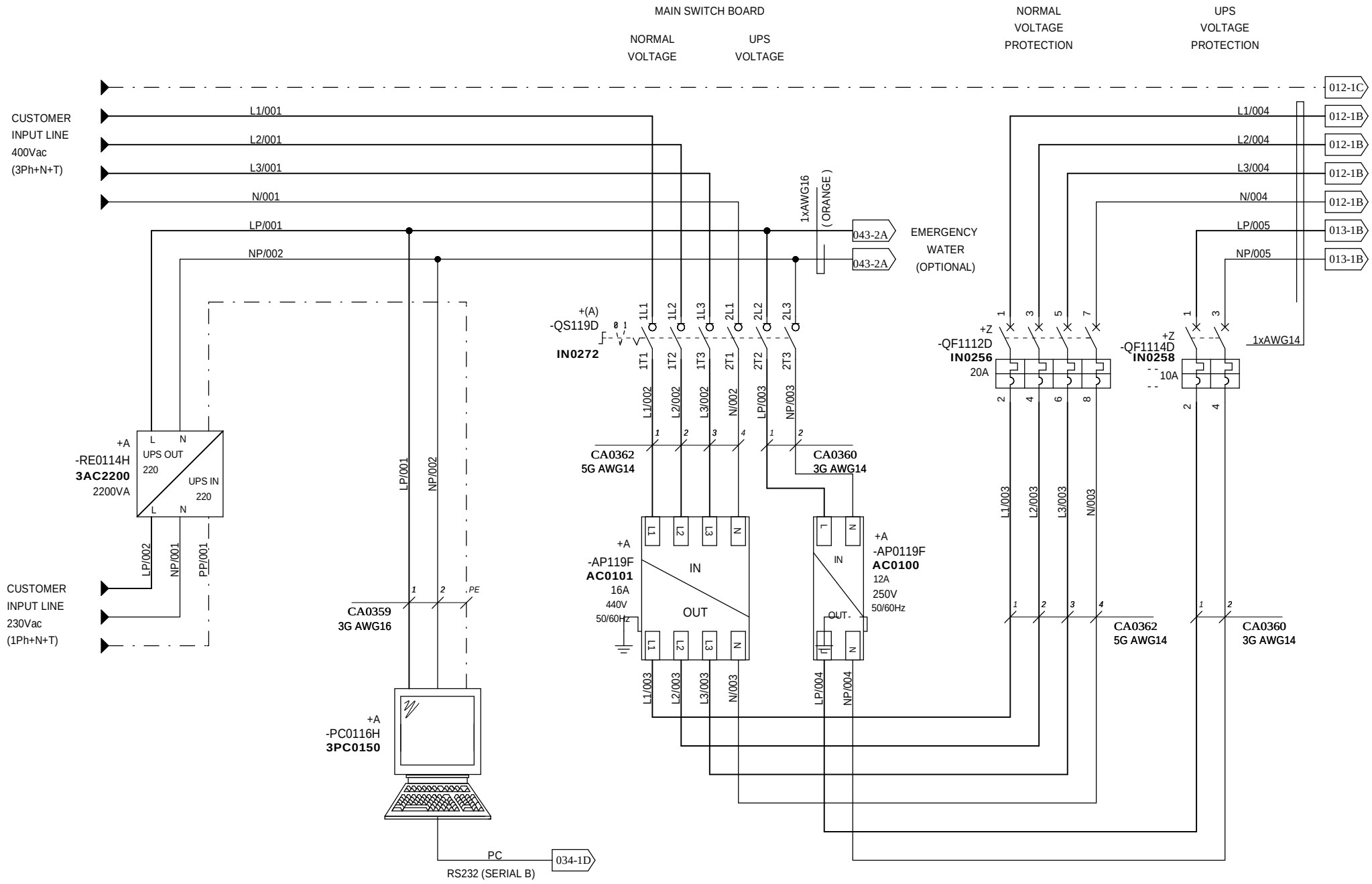

4	MDT 606	24/07/2008	Proserpio	DATE	30/01/2003
7	MDT1259	05/12/2012	Crivelli	REV.	Crivelli
8	MDT 1883	23/02/2015	Crivelli	CHECKED	Specker
REV	MODIFY	DATE	SIGNAT.	APPROVED	Crippa

LPE

TITLE SCHEMATIC ELETRIC DIAGRAM

SUBTITLE

CUSTOMER LPE Epitaxial Technology

PROJECT SCHEMATIC WIRING MACHINE
400Vac 3PH+N 230Vac 1PH+N F=50Hz

DIS.: Borgonovo

RH4847E4

VALIDITY FROM TO

SHEET 011

NEXT 012

IEC SYMBOLS

CONFIDENTIAL

This document and data disclosed herein is not to be reproduced used or disclosed in whole or in part to anyone without the permission of LPE Epitaxial Technology

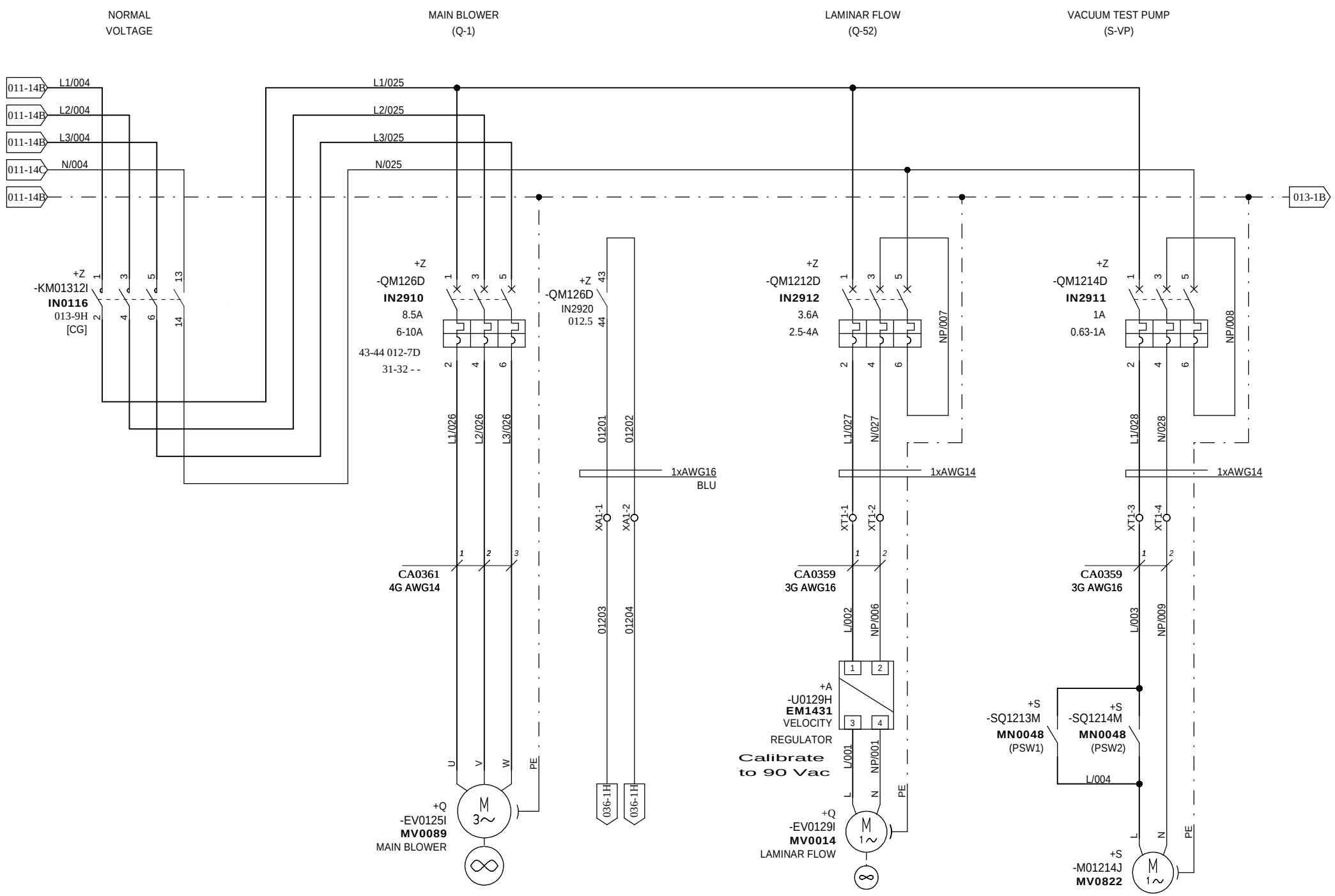

4	MDT 606	24/07/2008	Proserpio	DATE	30/01/2003
7	MDT1259	05/12/2012	Crivelli	REV.	Crivelli
8	MDT 1883	23/02/2015	Crivelli	CHECKED	Specker
REV	MODIFY	DATE	SIGNAT.	APPROVED	Crippa

LPE

TITLE SCHEMATIC ELETRIC DIAGRAM

SUBTITLE

CUSTOMER LPE Epitaxial Technology

PROJECT SCHEMATIC WIRING MACHINE
400Vac 3PH+N 230Vac 1PH+N F=50Hz

DIS.: Borgonovo

RH4847E4

VALIDITY FROM TO

SHEET 012

NEXT 013

IEC SYMBOLS

CONFIDENTIAL

This document and data disclosed herein is not to be reproduced used or disclosed in whole or in part to anyone without the permission of LPE Epitaxial Technology

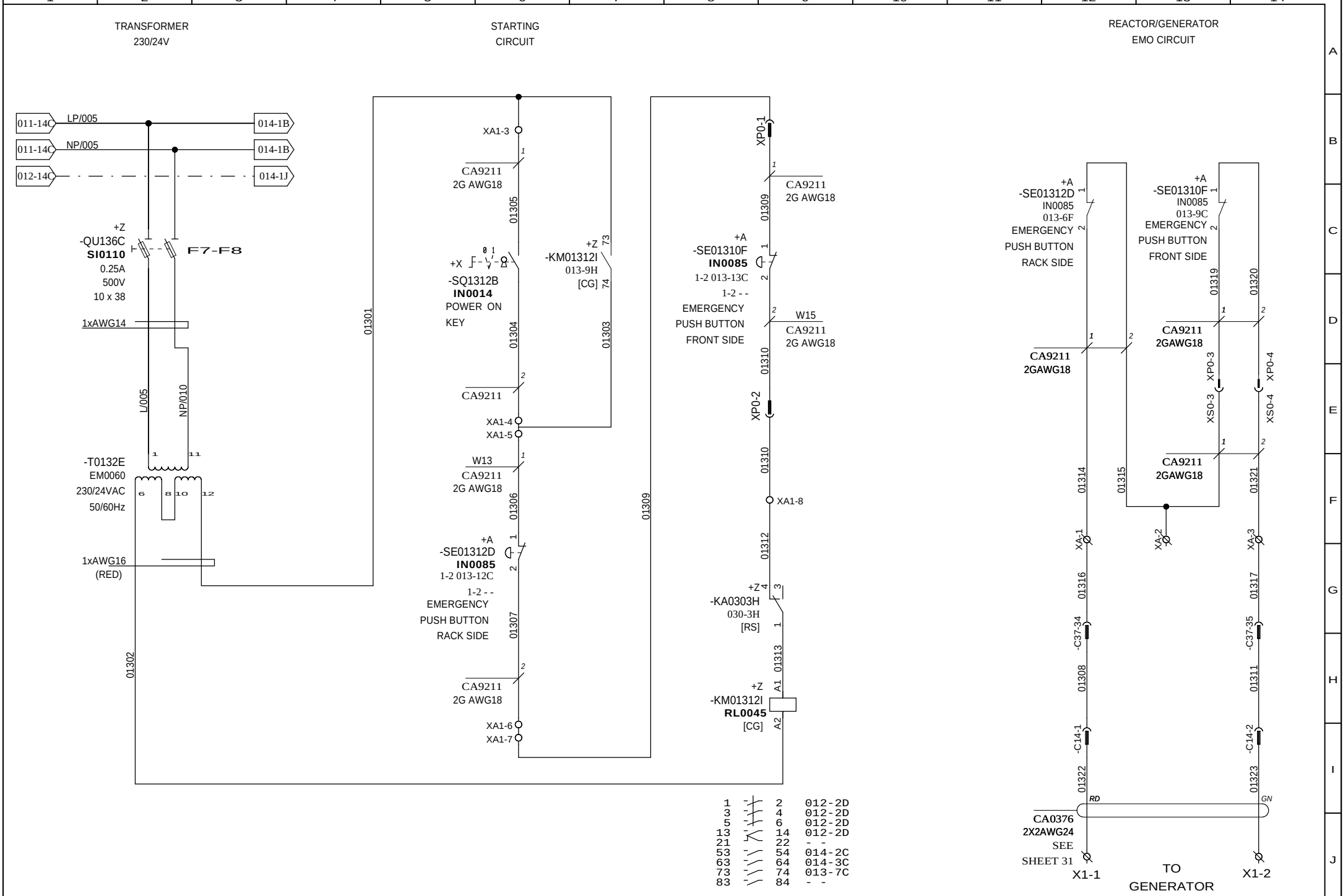

6	MDT	08/04/2011	Senno	DATE	30/01/2003
7	MDT1259	05/12/2012	Crivelli	REV.	Crivelli
8	MDT 1883	23/02/2015	Crivelli	CHECKED	Specker
REV	MODIFY	DATE	SIGNAT.	APPROVED	Crippa

LPE

TITLE SCHEMATIC ELETRIC DIAGRAM
SUBTITLE SECTION FROM UPS
CUSTOMER LPE Epitaxial Technology

PROJECT SCHEMATIC WIRING MACHINE
400Vac 3PH+N 230Vac 1PH+N F=50Hz
DIS.: Borgonovo
RH4847E4

VALIDITY
FROM TO

SHEET 013
NEXT 014

IEC SYMBOLS

CONFIDENTIAL

This document and data disclosed herein is not to be reproduced used or disclosed in whole or in part to anyone without the permission of LPE Epitaxial Technology

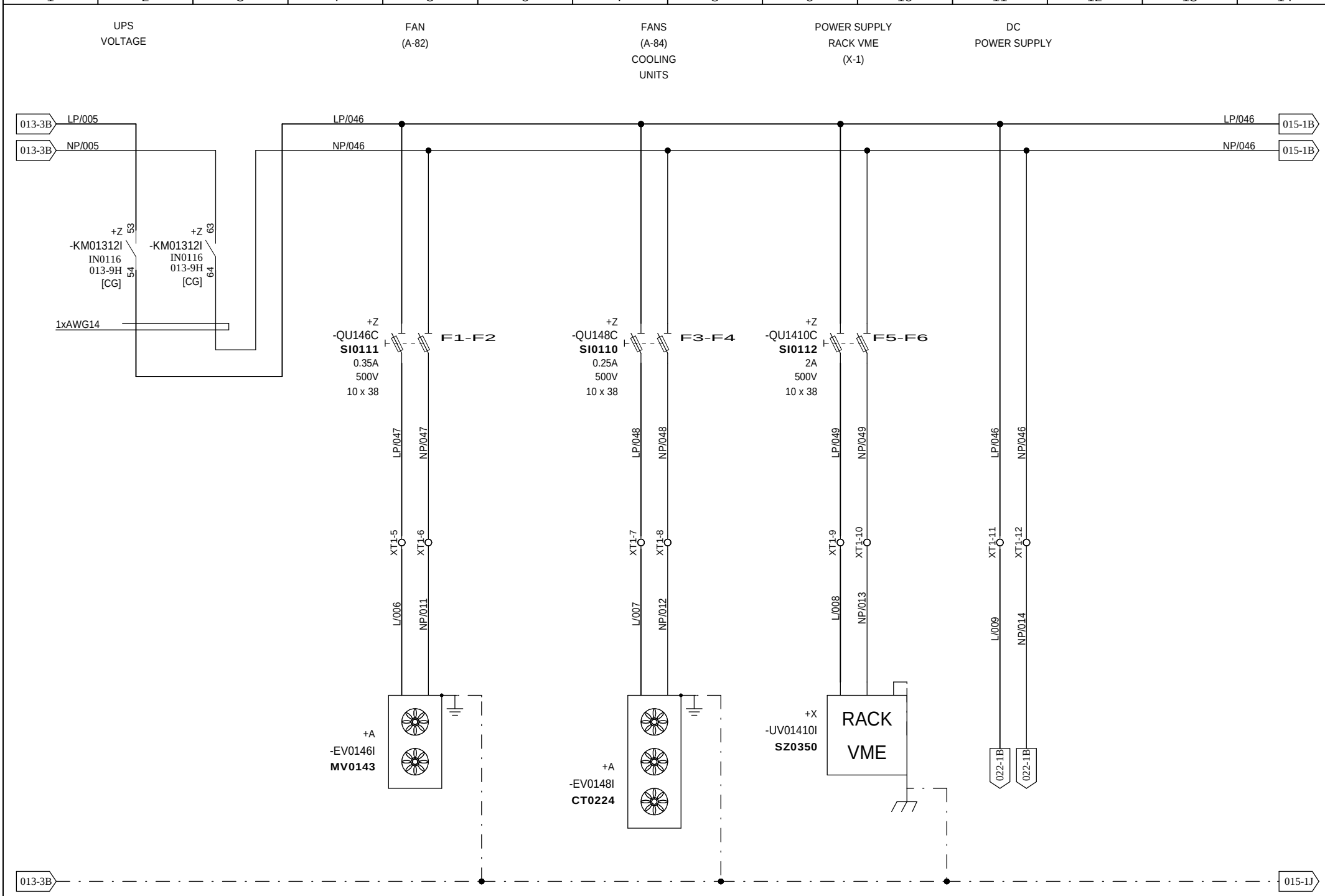

4	MDT 606	24/07/2008	Proserpio	DATE	30/01/2003
7	MDT1259	05/12/2012	Crivelli	REV.	Crivelli
8	MDT 1883	23/02/2015	Crivelli	CHECKED	Specker
REV	MODIFY	DATE	SIGNAT.	APPROVED	Crippa

LPE

TITLE SCHEMATIC ELETRIC DIAGRAM
SUBTITLE SECTION FROM UPS
CUSTOMER LPE Epitaxial Technology

PROJECT SCHEMATIC WIRING MACHINE
400Vac 3PH+N 230Vac 1PH+N F=50Hz

VALIDITY FROM TO

DIS.: Borgonovo

RH4847E4

SHEET 014
NEXT 015

IEC SYMBOLS

CONFIDENTIAL

This document and data disclosed herein is not to be reproduced used or disclosed in whole or in part to anyone without the permission of LPE Epitaxial Technology

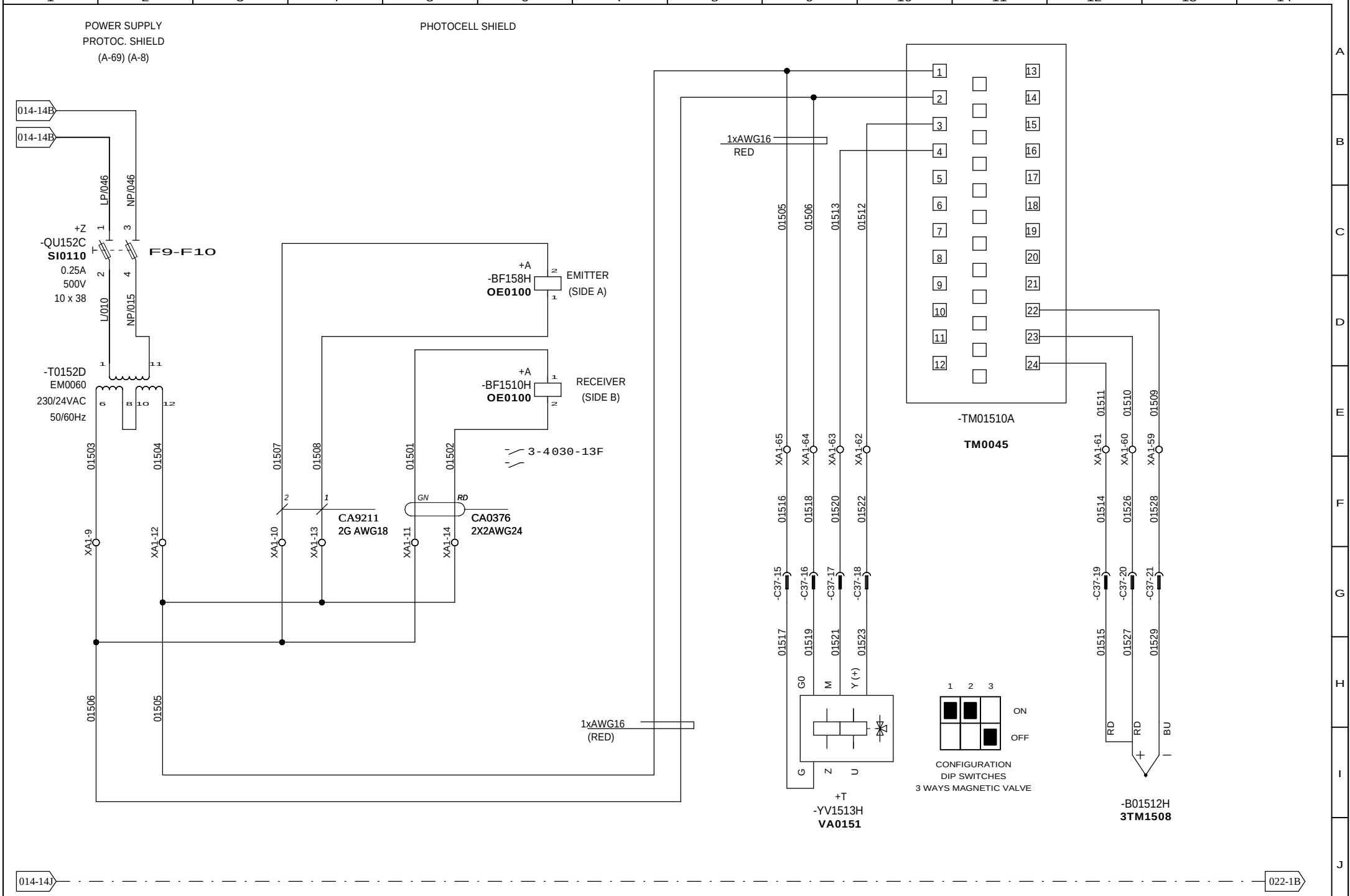

4	MDT 606	24/07/2008	Proserpio	DATE	30/01/2003
7	MDT1259	05/12/2012	Crivelli	REV.	Crivelli
8	MDT 1883	23/02/2015	Crivelli	CHECKED	Specker
REV	MODIFY	DATE	SIGNAT.	APPROVED	Crippa

LPE

TITLE SCHEMATIC ELETRIC DIAGRAM
SUBTITLE SECTION FROM UPS
CUSTOMER LPE Epitaxial Technology

PROJECT SCHEMATIC WIRING MACHINE
400Vac 3PH+N 230Vac 1PH+N F=50Hz

VALIDITY
FROM TO

DIS.: Borgonovo

RH4847E4

SHEET 015
NEXT 016

IEC SYMBOLS

CONFIDENTIAL

This document and data disclosed herein is not to be reproduced used or disclosed in whole or in part to anyone without the permission of LPE Epitaxial Technology

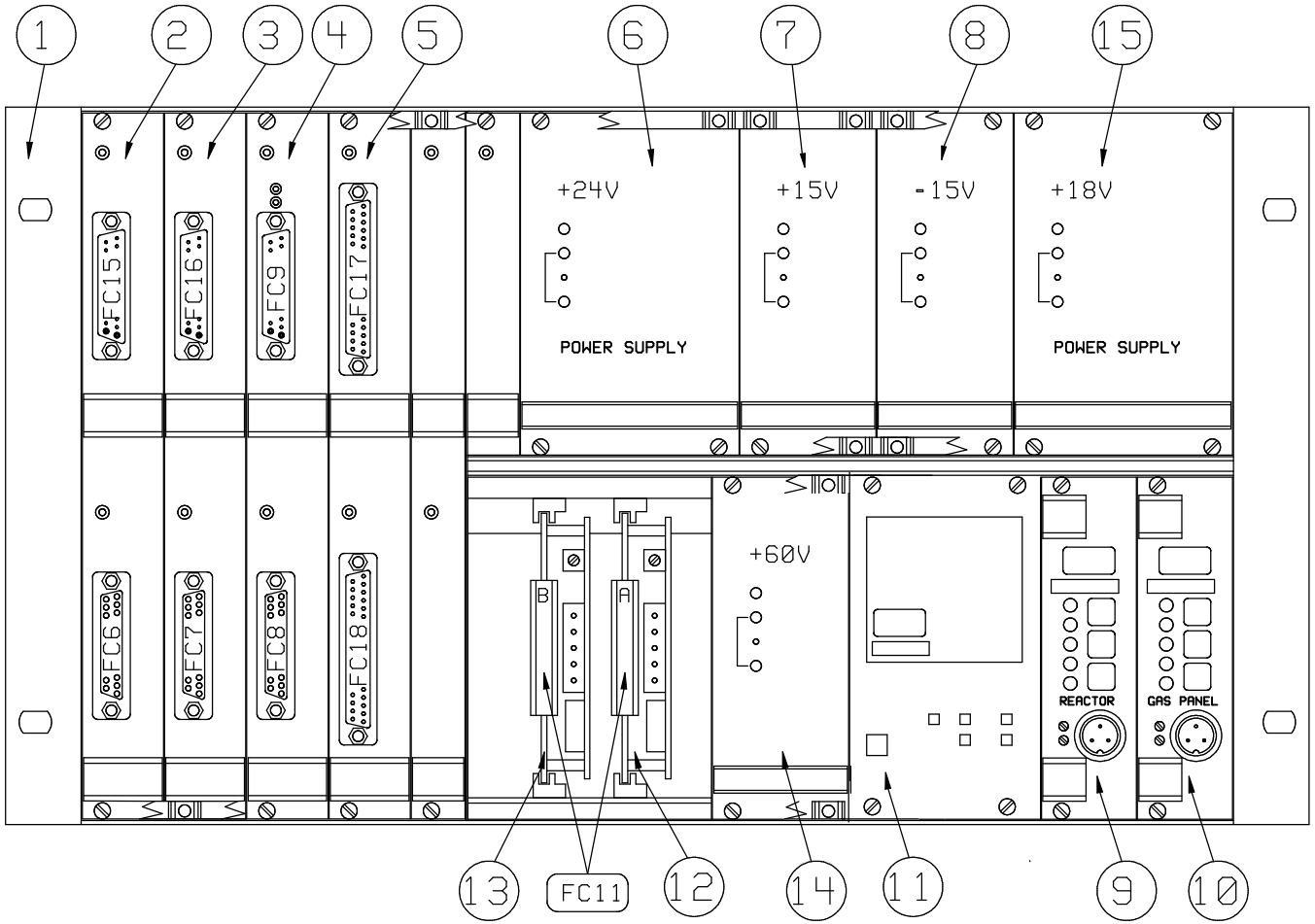

ITEM DESCRIPTION

SEE PAGE	ITEM	Q.tà	DESCRIPTION	CODE
16	1	1	RACK	RH4694G1
17,18	2,3	2	P.C. BOARD DISTRIBUTOR ANALOG I/O	SZ0091
19	4	1	P.C. BOARD DISTRIBUTOR ANALOG I/O	SZ0291
20,21	5	1	P.C. BOARD DIGITAL OUT SZ0092	SZ0092
22	6	1	POWER SUPPLY 24Vdc-10A/220Vac TA-220-24	AC0029R2
23	7,8	2	POWER SUPPLY 15Vdc-4A/220Vac TA-70-15	AC0170R2

ITEM DESCRIPTION

SEE PAGE	ITEM	Q.tà	DESCRIPTION	CODE
24	9,10	2	HYDROGEN DETECTOR MP1/LIE	SI0311
15	11	1	THERMAL REGULATOR	TM0045
26	12,13	2	STEPPING MOTOR DRIVE	AC1401
27	14	1	POWER SUPPLY 60Vdc-1.5A/220Vac TA-90-60	AC0201R2
27	15	1	POWER SUPPLY 18Vdc-12A/220Vac TA-210-18	AC0200R2
25		1	HYDROGEN DETECTOR MP1/LIE (OPTIONAL)	SI0311
25		1	FRONT MODULE (OPTIONAL)	CT0818

REV	MODIFY	DATE	SIGNAT.	APPROVED	Crippa
4	MDT 606	24/07/2008	Proserpio	DATE	30/01/2003
7	MDT1259	05/12/2012	Crivelli	REV.	Crivelli
8	MDT 1883	23/02/2015	Crivelli	CHECKED	Specker

TITLE FRONT VIEW RACK 19" (Y-1)

SUBTITLE

CUSTOMER LPE Epitaxial Technology

PROJECT SCHEMATIC WIRING MACHINE
400Vac 3PH+N 230Vac 1PH+N F=50Hz

DIS.: Borgonovo

RH4847E4

VALIDITY FROM TO

SHEET 016

NEXT 017

IEC SYMBOLS

CONFIDENTIAL

This document and data disclosed herein is not to be reproduced used or disclosed in whole or in part to anyone without the permission of LPE Epitaxial Technology

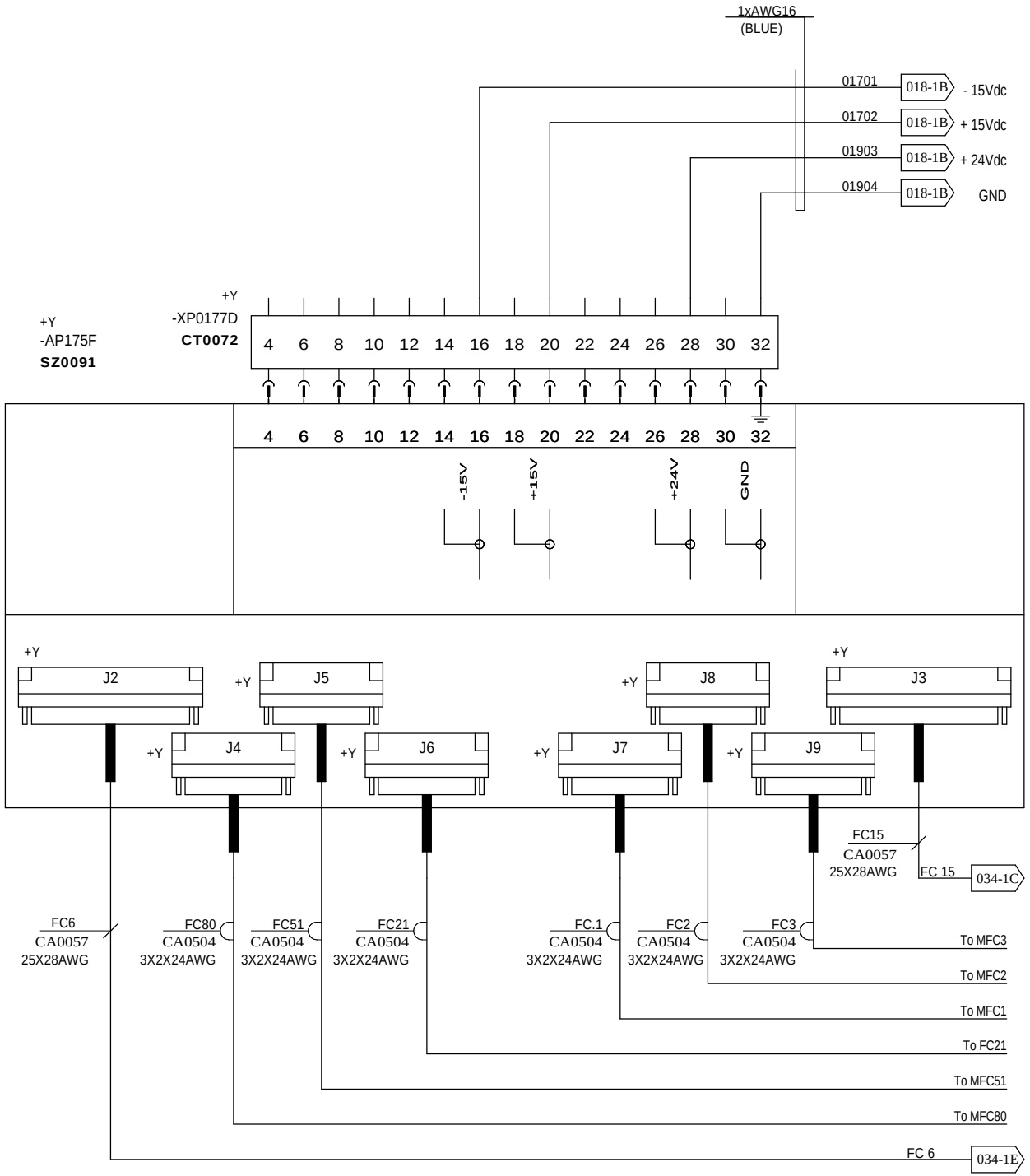

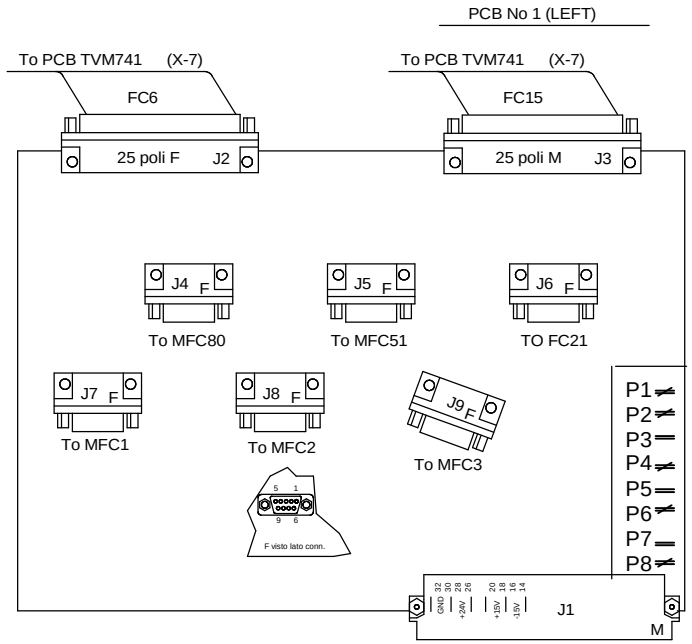

J4	TO 741		F.CABLES
Pin	Pin	Signal	
8 +15V			
4 -15V			
6 GND			
1 CONTROL	17	OUT 3	FC15
7 OUT	7	IN 4+	FC6
2 COMMON	6	IN 4-	FC6

J5	TO 741		F.CABLES
Pin	Pin	Signal	
8 +15V			
4 -15V			
6 GND			
1 CONTROL	20	OUT 5	FC15
7 OUT	18	IN 5+	FC6
2 COMMON	17	IN 5-	FC6

J6	TO 741		F.CABLES
Pin	Pin	Signal	
8 +15V			
4 -15V			
6 GND			
1 CONTROL	4	OUT 0	FC15
7 SOURCE	24	IN 1+	FC6
3 CARRIER	13	IN 0+	FC6
5 RATIO	10	IN 2+	FC6
2 COMMON	23	12 9	FC6

J7	TO 741		F.CABLES
Pin	Pin	Signal	
8 +15V			
4 -15V			
6 GND			
1 CONTROL	14	OUT 1	FC15
7 OUT	15	IN 7+	FC6
2 COMMON	14	IN 7-	FC6

J8	TO 741		F.CABLES
Pin	Pin	Signal	
8 +15V			
4 -15V			
6 GND			
1 CONTROL	7	OUT 2	FC15
7 OUT	4	IN 7+	FC6
2 COMMON	3	IN 7-	FC6

J9	TO 741		F.CABLES
Pin	Pin	Signal	
8 +15V			
4 -15V			
6 GND			
1 CONTROL	10	OUT 4	FC15
7 OUT	21	IN 3+	FC6
3 OUT2 (5J6)			
2 COMMON	20	IN 3-	FC6

				DATE	30/01/2003
0	FIRST EMISSION	30/01/2003	Borgonovo	REV.	Crivelli
8	MDT 1883	23/02/2015	Crivelli	CHECKED	Specker
REV	MODIFY	DATE	SIGNAT.	APPROVED	Crippa

LPE

TITLE BOARD (Y-2) WIRING DIAGRAM

SUBTITLE

CUSTOMER LPE Epitaxial Technology

PROJECT SCHEMATIC WIRING MACHINE
400Vac 3PH+N 230Vac 1PH+N F=50Hz

DIS.: Borgonovo

RH4847E4

VALIDITY
FROM TO

SHEET 017
NEXT 018

IEC SYMBOLS

CONFIDENTIAL

This document and data disclosed herein is not to be reproduced used or disclosed in whole or in part to anyone without the permission of LPE Epitaxial Technology

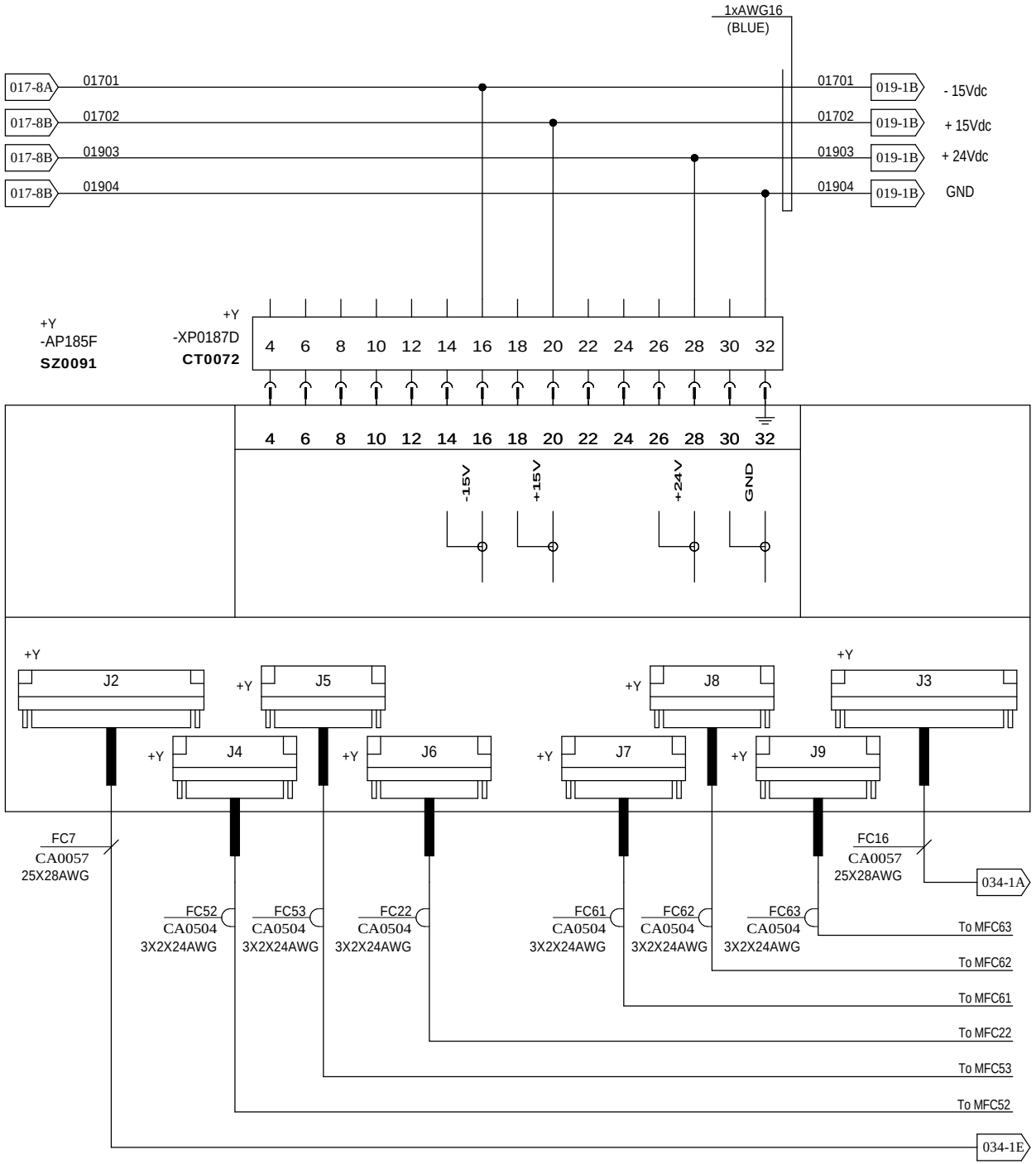

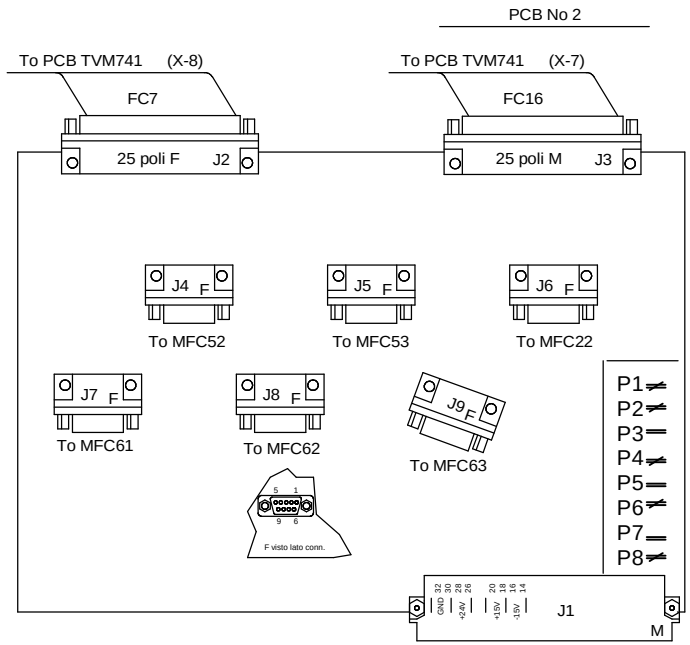

J4	TO 741		F.CABLES
Pin	Pin	Signal	
8 +15V			
4 -15V			
6 GND			
1 CONTROL	17	OUT 3	FC16
7 OUT	7	IN 4+	FC7
2 COMMON	6	IN 4 -	FC7

J5	TO 741		F.CABLES
Pin	Pin	Signal	
8 +15V			
4 -15V			
6 GND			
1 CONTROL	20	OUT 5	FC16
7 OUT	18	IN 5+	FC7
2 COMMON	17	IN 5-	FC7

J6	TO 741		F.CABLES
Pin	Pin	Signal	
8 +15V			
4 -15V			
6 GND			
1 CONTROL	4	OUT 0	FC16
7 SOURCE	24	IN 1+	FC7
3 CARRIER	13	IN 0+	FC7
5 RATIO	10	IN 2+	FC7
2 COMMON	23	12 9	FC7

J7	TO 741		F.CABLES
Pin	Pin	Signal	
8 +15V			
4 -15V			
6 GND			
1 CONTROL	14	OUT 1	FC16
7 OUT	15	IN 7+	FC7
2 COMMON	14	IN 7-	FC7

J8	TO 741		F.CABLES
Pin	Pin	Signal	
8 +15V			
4 -15V			
6 GND			
1 CONTROL	7	OUT 2	FC16
7 OUT	4	IN 7+	FC7
2 COMMON	3	IN 7-	FC7

J9	TO 741		F.CABLES
Pin	Pin	Signal	
8 +15V			
4 -15V			
6 GND			
1 CONTROL	10	OUT 4	FC16
7 OUT	21	IN 3+	FC7
3 OUT2 (5J6)			
2 COMMON	20	IN 3-	FC7

				DATE	30/01/2003
0	FIRST EMISSION	30/01/2003	Borgonovo	REV.	Crivelli
8	MDT 1883	23/02/2015	Crivelli	CHECKED	Specker
REV	MODIFY	DATE	SIGNAT.	APPROVED	Crippa

LPE

TITLE BOARD (Y-3) WIRING DIAGRAM

SUBTITLE

CUSTOMER LPE Epitaxial Technology

PROJECT SCHEMATIC WIRING MACHINE
400Vac 3PH+N 230Vac 1PH+N F=50Hz

DIS.: Borgonovo

RH4847E4

VALIDITY
FROM TO

SHEET 018
NEXT 019

IEC SYMBOLS

CONFIDENTIAL

This document and data disclosed herein is not to be reproduced used or disclosed in whole or in part to anyone without the permission of LPE Epitaxial Technology

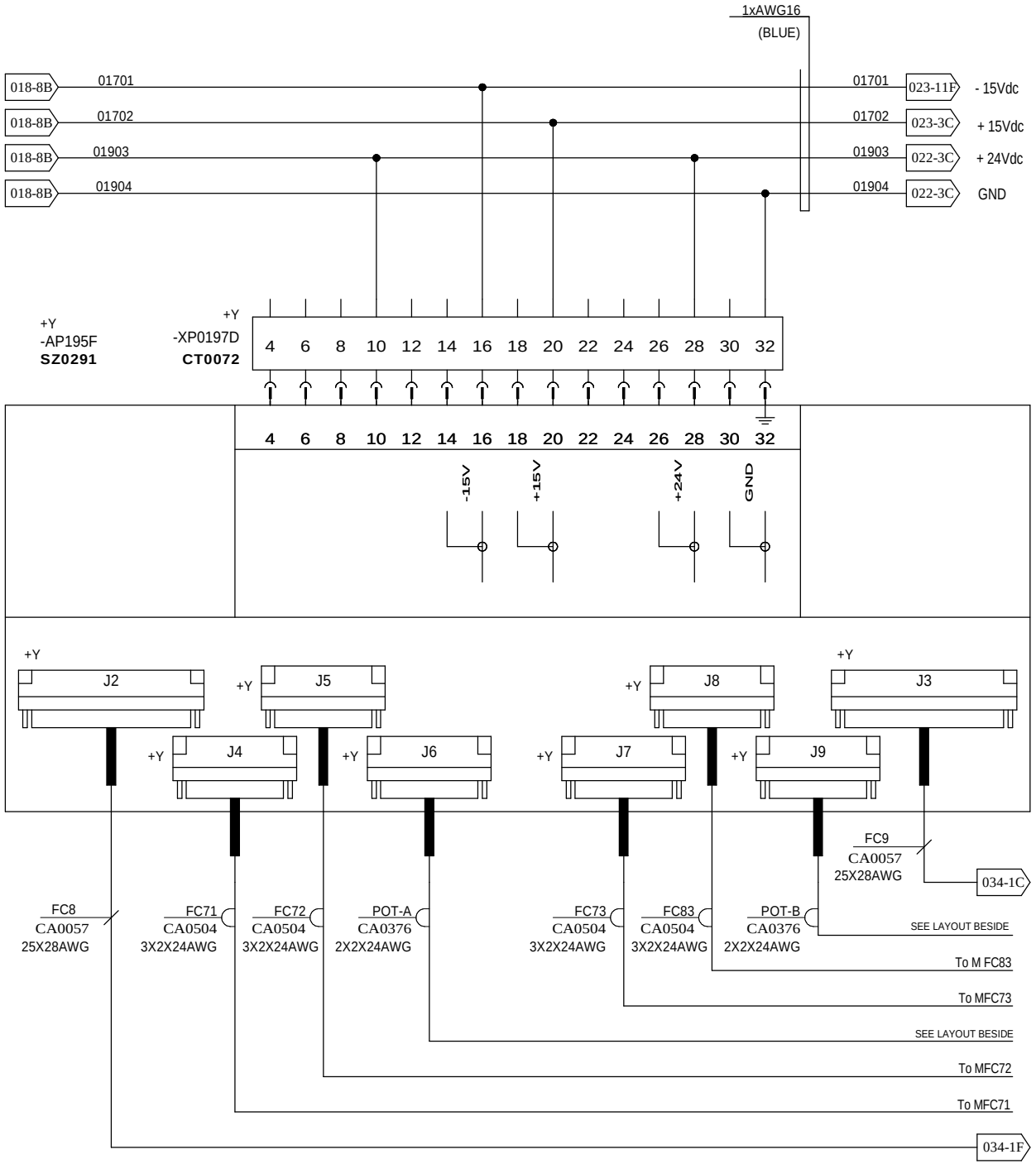

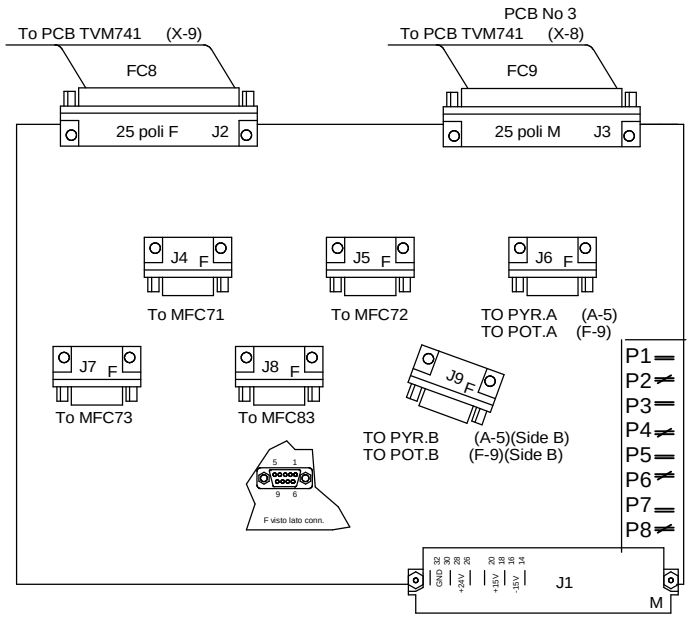

J4	TO 741		F.CABLES
Pin	Pin	Signal	
8 +15V			
4 -15V			
6 GND			
1 CONTROL	17	OUT 3	FC9
7 OUT	7	IN 4+	FC8
2 COMMON	6	IN 4-	FC8

J5	TO 741		F.CABLES
Pin	Pin	Signal	
8 +15V			
4 -15V			
6 GND			
1 CONTROL	20	OUT 5	FC9
7 OUT	18	IN 5+	FC8
2 COMMON	17	IN 5-	FC8

J6	TO 741		F.CABLES
Pin	Pin	Signal	
8 +15V			
4 -15V			
6 GND			
1	4	OUT 0	
7 PYROMETER	24	IN 1+	FC9
3 POTENTIOM.	13	IN 0+	FC8
5	10	IN 2+	FC8
2 COMMON	23	12 9	FC8

J7	TO 741		F.CABLES
Pin	Pin	Signal	
8 +15V			
4 -15V			
6 GND			
1 CONTROL	14	OUT 1	FC9
7 OUT	15	IN 7+	FC8
2 COMMON	14	IN 7-	FC8

J8	TO 741		F.CABLES
Pin	Pin	Signal	
8 +15V			
4 -15V			
6 GND			
1 CONTROL	7	OUT 2	
7 OUT	4	IN 7+	
2 COMMON	3	IN 7-	

J9	TO 741		F.CABLES
Pin	Pin	Signal	
8 +15V			
4 -15V			
6 GND			
1	10	OUT 4	
7 PYROMETER	21	IN 3+	FC8
3 POTENTIOM.		(5J6)	FC8
2 COMMON	20	IN 3-	FC8

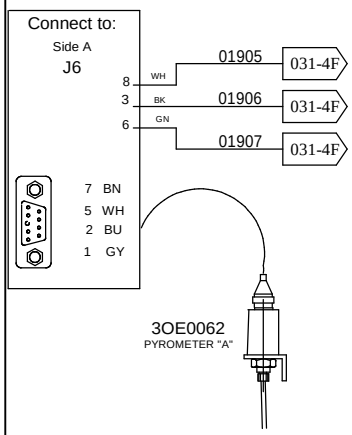

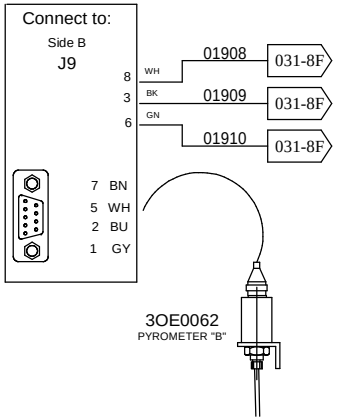

2	GENERAL UPGRADE	01/06/2005	Napoli	DATE	30/01/2003
4	MDT 606	24/07/2008	Proserpio	REV.	Crivelli
8	MDT 1883	23/02/2015	Crivelli	CHECKED	Specker
REV	MODIFY	DATE	SIGNAT.	APPROVED	Crippa

LPE

TITLE BOARD (Y-4) WIRING DIAGRAM

SUBTITLE

CUSTOMER LPE Epitaxial Technology

PROJECT SCHEMATIC WIRING MACHINE
400Vac 3PH+N 230Vac 1PH+N F=50Hz

DIS.: Borgonovo

RH4847E4

VALIDITY
FROM TO

SHEET 019
NEXT 020

IEC SYMBOLS

CONFIDENTIAL

This document and data disclosed herein is not to be reproduced used or disclosed in whole or in part to anyone without the permission of LPE Epitaxial Technology

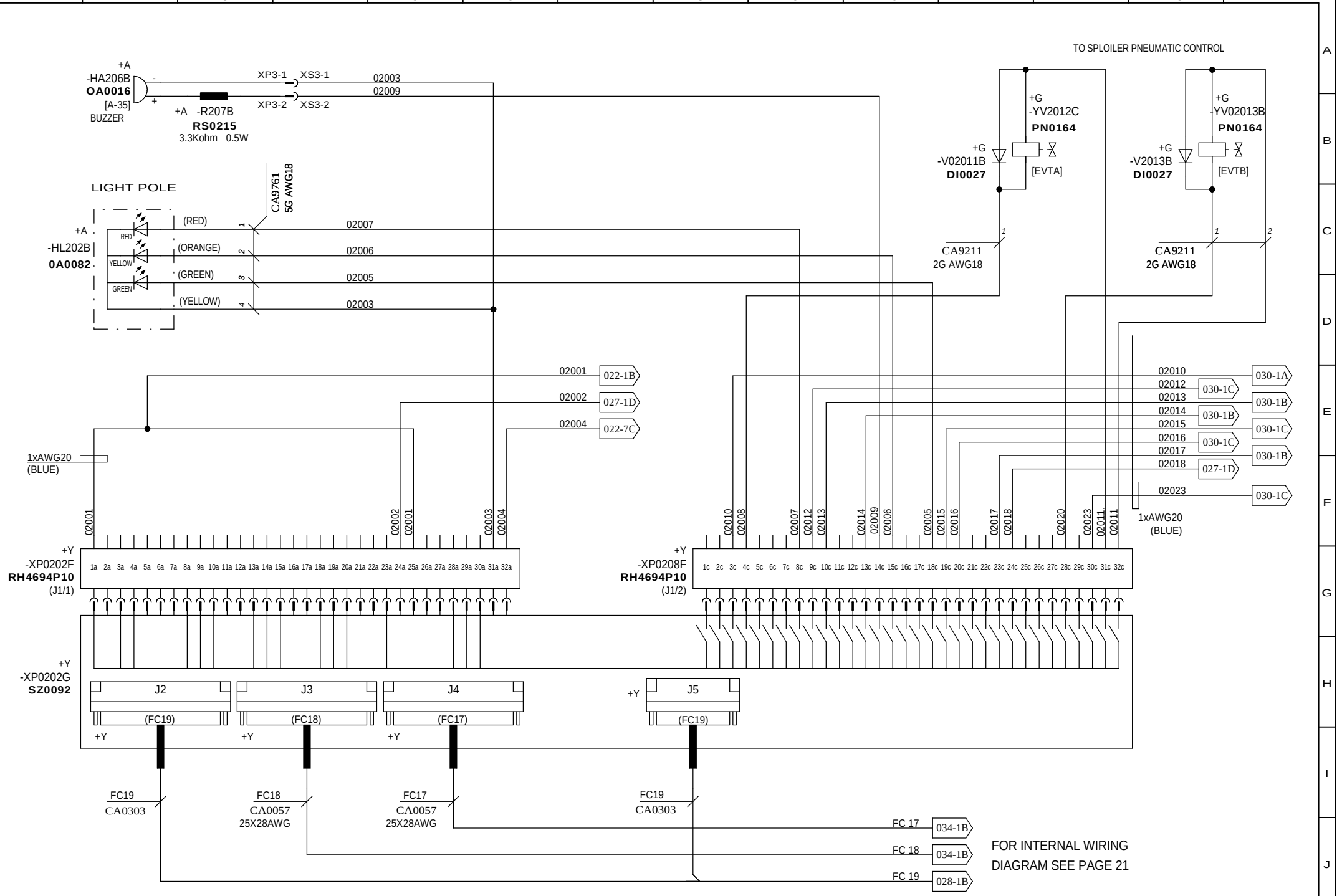

5	MDT 928	11/03/2011	Senno	DATE	30/01/2003
6	MDT1259	04/12/2012	Crivelli	REV.	Crivelli
8	MDT 1883	23/02/2015	Crivelli	CHECKED	Specker
REV	MODIFY	DATE	SIGNAT.	APPROVED	Crippa

LPE

TITLE BOARD (Y-5) WIRING DIAGRAM

SUBTITLE

CUSTOMER LPE Epitaxial Technology

PROJECT SCHEMATIC WIRING MACHINE
400Vac 3PH+N 230Vac 1PH+N F=50Hz

DIS.: Borgonovo

RH4847E4

VALIDITY FROM TO

SHEET 020

NEXT 021

IEC SYMBOLS

CONFIDENTIAL This document and data disclosed herein is not to be reproduced used or disclosed in whole or in part to anyone without the permission of LPE Epitaxial Technology

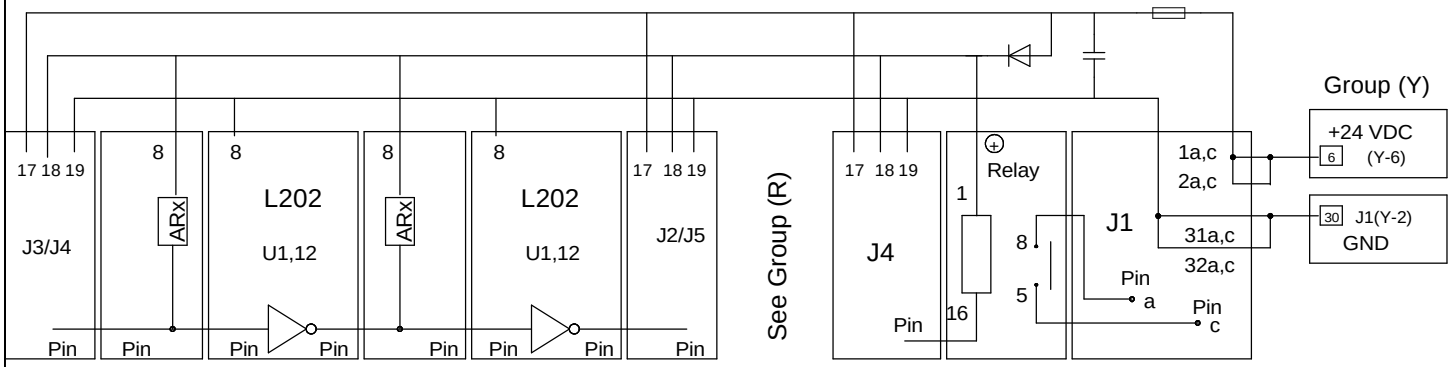

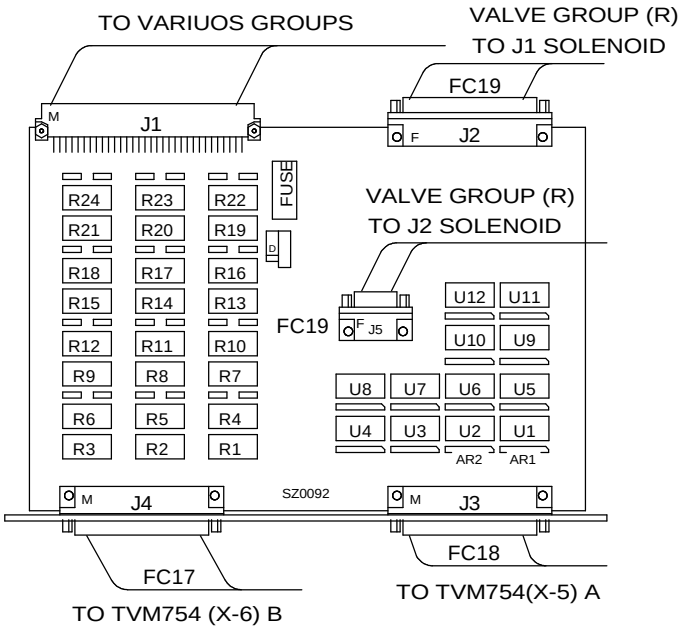

J3/J4 Pin	Board	Pin	U	Pin	Board	Pin	U	Pin	J2/J5 Pin	See Group (R)
1	AR3	4	U3	13	AR7	4	U7	13	1	EVCA
20		5		12		5		12	20	EV83-14
2		6		11		6		11	2	EVCB
21		7		10		7		10	21	EV41
3	AR2	1	U2	16		1	U6	16	3	EVT1(A)
4		2		16		2		16	4	EVT2(B)
5		3		14		3		14	5	EVBL2
6		4		13		4		13	6	EV61-2
7		5		12		4		12	7	EV63
8		6		11		6		11	8	EV64
9		7		10		7		10	9	EV23
10	AR1	1	U1	16	AR5	1	U5	16	10	EV32
11		2		16		2		15	11	EVBL1
12		3		14		3		14	12	EV53
13		4		13		4		13	13	EV4-6
14		5		12		5		12	14	EV8
15		6		11		6		11	15	EV10
16		7		10		7		10	16	EV12
22	AR10	1	U10	16	AR12	1	U12	16	22	EV42
23		2		15		2		15	23	EVDA
24		3		14		3		14	24	EVDB
25		4		13		4		13	25	EV71-2
26		5		12		5		12	26	EV73
27		6		11		6		11	27	EV74
28		7		10		7		10	28	EV31
29	AR9	1	U9	16	AR11	1	U11	16	29	EV33
30		2		15		2		15	30	EV51-2
31		3		14		3		14	31	EV54
32		4		13		4		13	32	EV7
33		5		12		5		12	33	EV9
34		6		11		6		11	34	EV11
35		7		10		7		10	35	EV13
35	AR3	1	U3	16	AR7	1	U7	16	9	EV3-5
16	AR4	7	U4	10	AR8	7	U8	10	4	EV82
34		6		11		6		11	8	EV22
15		5		12		5		12	3	EV81
33		4		13		4		13	7	N.C. / EV75
14		3		14		3		14	2	EV43
32		2		15		2		15	6	EV21
13		1		16		1		16	1	EV00 / EV55

J4 Out	J4 Pin	Relay	J1 Pin	J1 Pin	
32	1	24	6 a	6 c	EVV2A/C (Y-5)
34	2	18	5 a	5 c	EVV4A(Y-5)
36	3	12	4 a	4 c	EVTA(G-6)
38	4	6	3 a	3 c	RDN (Z-13)
40	5	23	16 a	16 c	EVV2B/C (Y-5)
42	6	17	15 a	15 c	LWS YELLOW
44	7	11	14 a	14 c	BUZZER (A-35)
46	8	22	26 a	26 c	EVV9 (Y-5)
48	9	19	27 a	27 c	EVV4B(Y-5)
50	10	13	28 a	28 c	EVTB(G-6)
52	11	7	29 a	29 c	EW (Z-13)
54	12	1	30 a	30 c	KUA (Z-13)
33	20	21	7 a	7 c	EVV2A/O (Y-5)
35	21	15	8 a	8 c	LWS RED
37	22	9	9 a	9 c	EG (Z-13)
39	23	3	10 a	10 c	RUP (Z-13)
41	24	20	17 a	17 c	EVV2B/O (Y-5)
43	25	14	18 a	18 c	LWS GREEN
45	26	8	19 a	19 c	RS (Z-13)
47	27	5	13 a	13 c	KDB (Z-13)
49	28	16	25 a	25 c	EV90
51	29	10	24 a	24 c	INHIBIT (Y-11)
53	30	4	23 a	23 c	KUB (Z-13)
55	31	2	20 a	20 c	KDA (Z-13)

ITEM DESCRIPTIONS

SEE PAGE	ITEM	Q.ta	DESCRIPTION	CODE
-	1	1	P.C.B. ASSEMBLY	SZ0092
-	U1-U12	12	I.C. ULN 2002	IL0202
-	R1-R24	24	RELAIS DSP1A-DC24V	RL2401
-	AR1-12	12	RESISTOR ARRAY 7 x 4.7K	RS7001
-	FUSE	1	FUSE 3A	SI0203
-	J1	1	CONN	CT0184
-	J2	1	CONNECTOR 37P FEMALE	CT0341
-	J3,J4	2	CONNECTOR 37P MALE	CT0340
-	J5	1	CONNECTOR 9P FEMALE	CT0361

REV	MODIFY	DATE	SIGNAT.	APPROVED	Crippa
5	MDT 928	11/03/2011	Senno	DATE	30/01/2003
6	MDT1259	04/12/2012	Crivelli	REV.	Crivelli
8	MDT 1883	23/02/2015	Crivelli	CHECKED	Specker

LPE

TITLE BOARD (Y-5) WIRING DIAGRAM
SUBTITLE INTERNAL
CUSTOMER LPE Epitaxial Technology

PROJECT SCHEMATIC WIRING MACHINE
400Vac 3PH+N 230Vac 1PH+N F=50Hz
DIS.: Borgonovo
RH4847E4

VALIDITY FROM TO
SHEET 021
NEXT 022

IEC SYMBOLS

CONFIDENTIAL

This document and data disclosed herein is not to be reproduced used or disclosed in whole or in part to anyone without the permission of LPE Epitaxial Technology

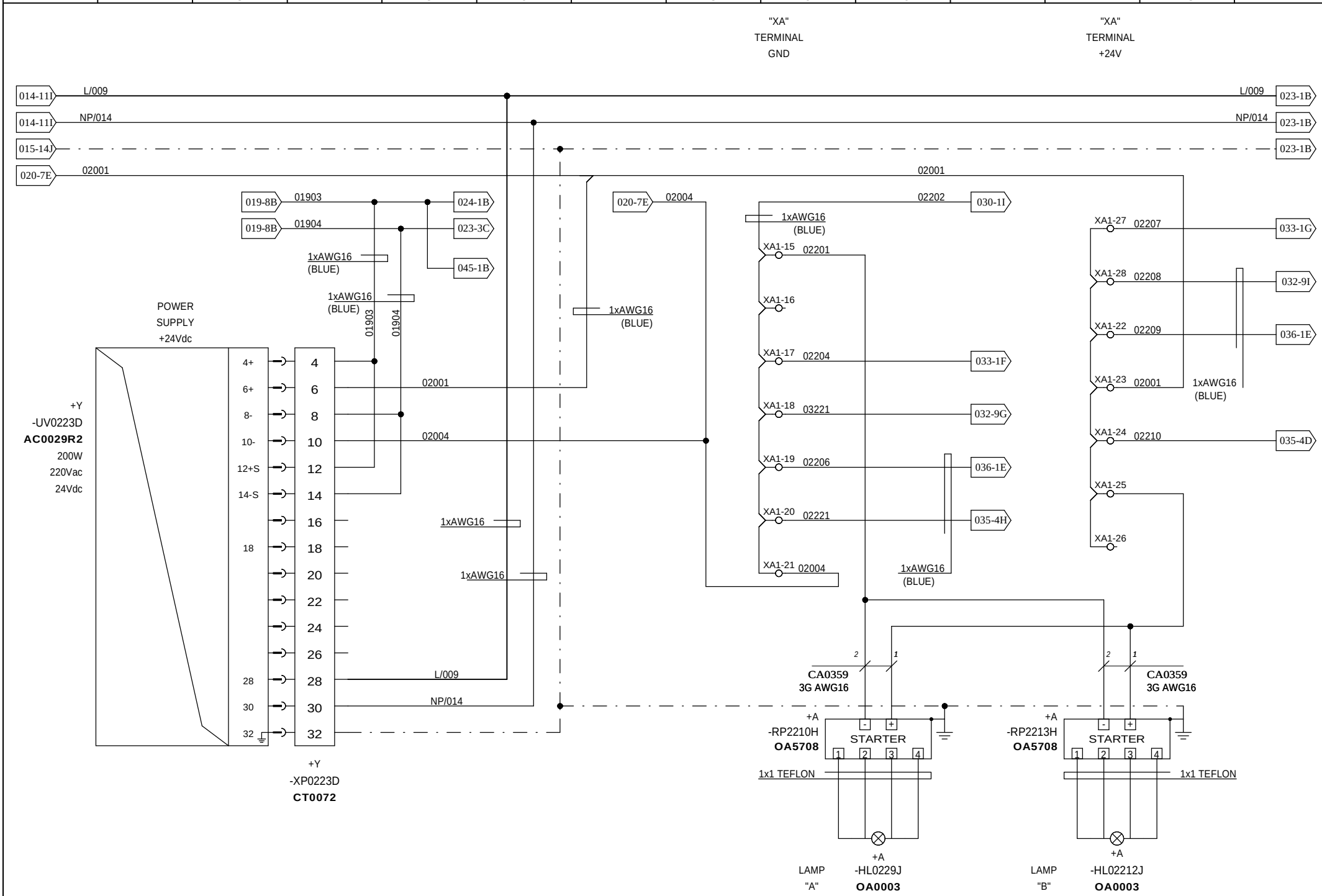

0	FIRST EMISSION	30/01/2003	Borgonovo	DATE	30/01/2003
4	MDT 606	24/07/2008	Proserpio	REV.	Crivelli
8	MDT 1883	23/02/2015	Crivelli	CHECKED	Specker
REV	MODIFY	DATE	SIGNAT.	APPROVED	Crippa

TITLE 24Vdc POWER SUPPLY (Y-6)

SUBTITLE

CUSTOMER LPE Epitaxial Technology

PROJECT SCHEMATIC WIRING MACHINE
400Vac 3PH+N 230Vac 1PH+N F=50Hz

DIS.: Borgonovo

RH4847E4

VALIDITY FROM TO

SHEET 022

NEXT 023

IEC SYMBOLS

CONFIDENTIAL

This document and data disclosed herein is not to be reproduced used or disclosed in whole or in part to anyone without the permission of LPE Epitaxial Technology

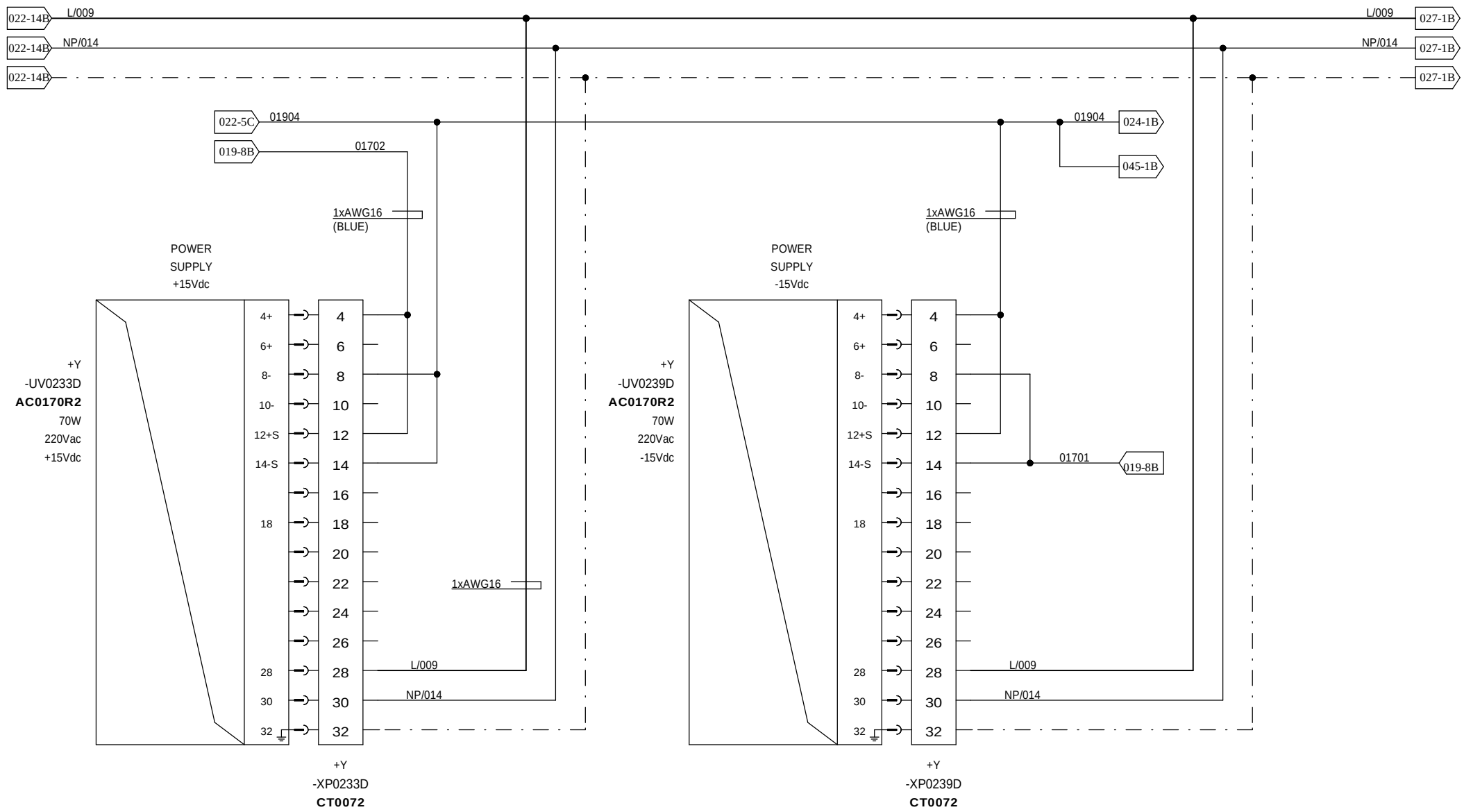

1	GENERAL UPGRADE	13/07/2004	Adecco	DATE	30/01/2003
4	MDT 606	24/07/2008	Proserpio	REV.	Crivelli
8	MDT 1883	23/02/2015	Crivelli	CHECKED	Specker
REV	MODIFY	DATE	SIGNAT.	APPROVED	Crippa

TITLE +15Vdc POWER SUPPLY (Y-7)
SUBTITLE -15Vdc POWER SUPPLY (Y-8)
CUSTOMER LPE Epitaxial Technology

PROJECT SCHEMATIC WIRING MACHINE
400Vac 3PH+N 230Vac 1PH+N F=50Hz

DIS.: Borgonovo

RH4847E4

VALIDITY
FROM TO

SHEET 023
NEXT 024

IEC SYMBOLS

CONFIDENTIAL

This document and data disclosed herein is not to be reproduced used or disclosed in whole or in part to anyone without the permission of LPE Epitaxial Technology

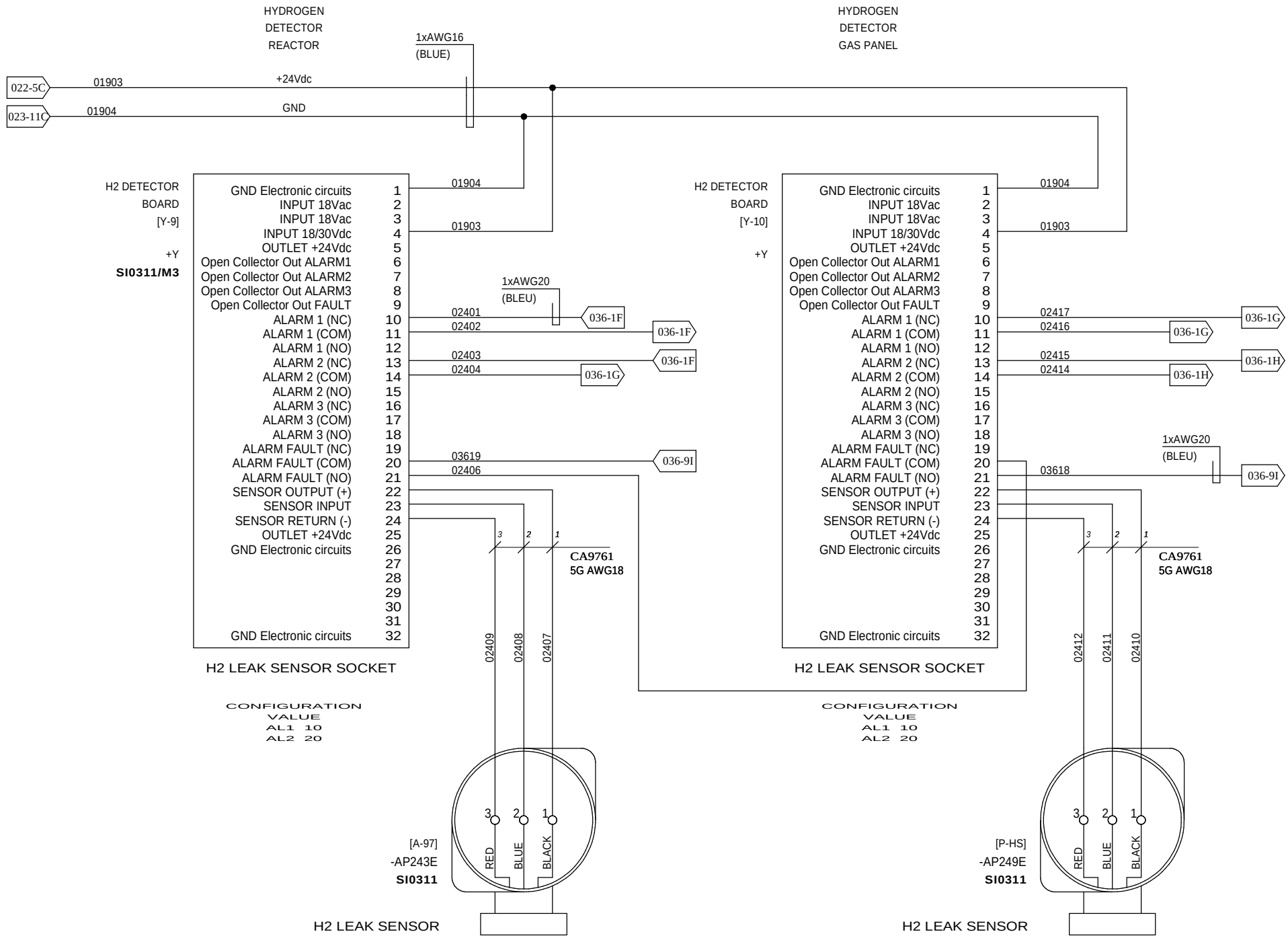

3	GENERAL UPGRADE	01/06/2005	Napoli	DATE	30/01/2003
4	MDT 606	24/07/2008	Proserpio	REV.	Crivelli
8	MDT 1883	23/02/2015	Crivelli	CHECKED	Specker
REV	MODIFY	DATE	SIGNAT.	APPROVED	Crippa

LPE

TITLE H2 DETECTOR BOARD (Y-9)(Y-10)

SUBTITLE

CUSTOMER LPE Epitaxial Technology

PROJECT SCHEMATIC WIRING MACHINE
400Vac 3PH+N 230Vac 1PH+N F=50Hz

DIS.: Borgonovo

RH4847E4

VALIDITY FROM TO

SHEET 024

NEXT 025

IEC SYMBOLS

CONFIDENTIAL This document and data disclosed herein is not to be reproduced used or disclosed in whole or in part to anyone without the permission of LPE Epitaxial Technology

THIS PAGE HAS BEEN
INTENTIONALLY LEFT BLANK

3	GENERAL UPGRADE	01/06/2005	Napoli	DATE	30/01/2003
4	MDT 606	24/07/2008	Proserpio	REV.	Crivelli
8	MDT 1883	23/02/2015	Crivelli	CHECKED	Specker
REV	MODIFY	DATE	SIGNAT.	APPROVED	Crippa

TITLE (SPARE PAGE)
SUBTITLE
CUSTOMER LPE Epitaxial Technology

PROJECT SCHEMATIC WIRING MACHINE
400Vac 3PH+N 230Vac 1PH+N F=50Hz

VALIDITY FROM TO

DIS.: Borgonovo

RH4847E4

SHEET 025
NEXT 026

IEC SYMBOLS

CONFIDENTIAL

This document and data disclosed herein is not to be reproduced used or disclosed in whole or in part to anyone without the permission of LPE Epitaxial Technology

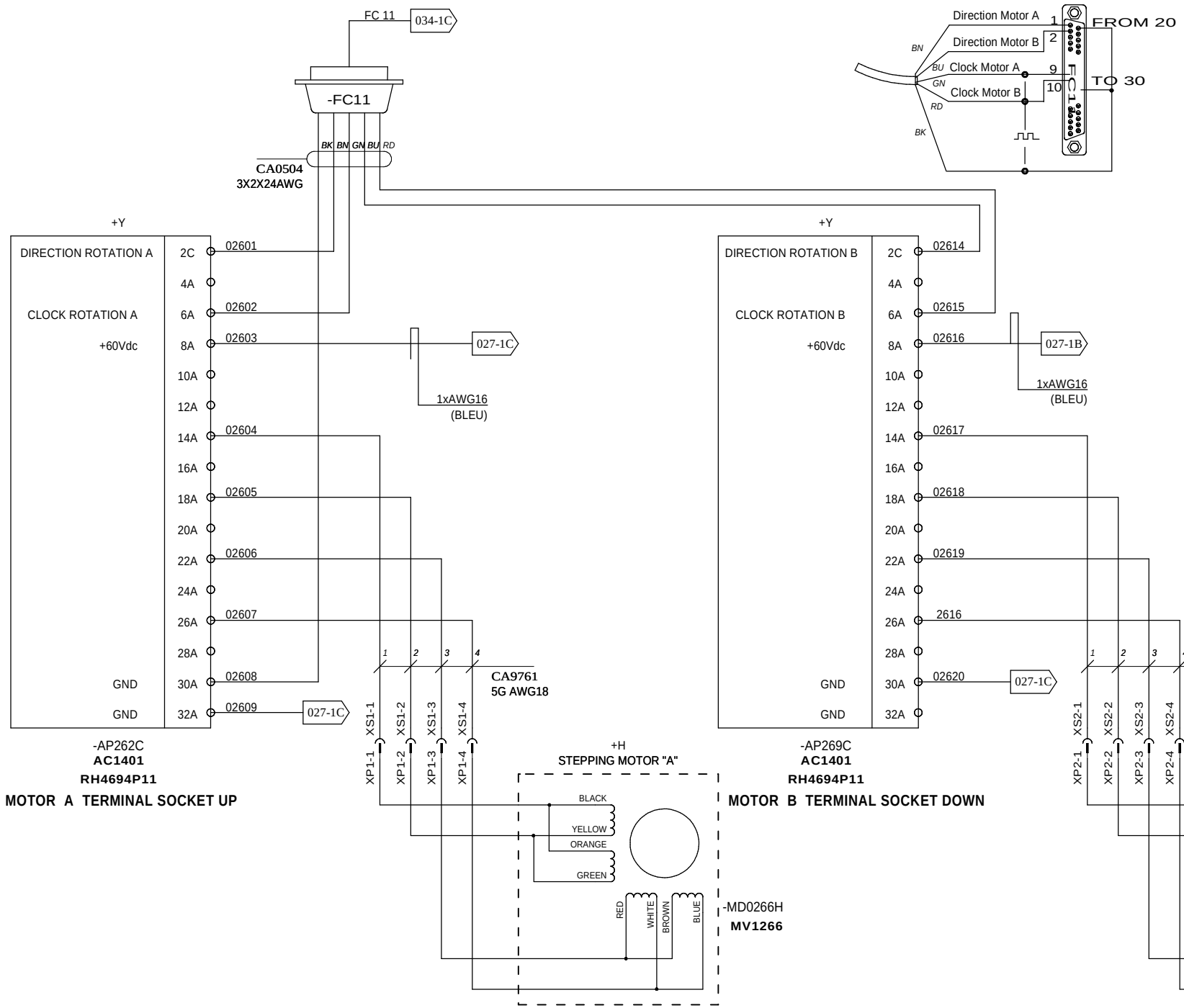

DRIVER 400-04-85V33 CONFIGURATION

12A = INTERNAL FUNCTION
M = CLOSED
F = CLOSED
H = OPEN

SETTING VIA DIP SWITCH

NR.1 = ON
NR.2 = OFF
NR.3 = OFF
NR.4 = OFF
NR.5 = OFF
NR.6 = OFF
NR.7 = OFF

CURRENT SETTING

TRIM SW TO "5" WITH MOTOR PK266M-E (2.0A)

3	THIRD EMISSION	09/03/2007	Borgonovo	DATE	30/01/2003
4	MDT 606	24/07/2008	Proserpio	REV.	Crivelli
8	MDT 1883	23/02/2015	Crivelli	CHECKED	Specker
REV	MODIFY	DATE	SIGNAT.	APPROVED	Crippa

LPE

TITLE ROTATION DRIVER BOARD
SUBTITLE (Y-12) (Y-13)
CUSTOMER LPE Epitaxial Technology

PROJECT SCHEMATIC WIRING MACHINE
400Vac 3PH+N 230Vac 1PH+N F=50Hz
DIS.: Borgonovo
RH4847E4

VALIDITY
FROM TO

SHEET 026
NEXT 027

IEC SYMBOLS

CONFIDENTIAL

This document and data disclosed herein is not to be reproduced used or disclosed in whole or in part to anyone without the permission of LPE Epitaxial Technology

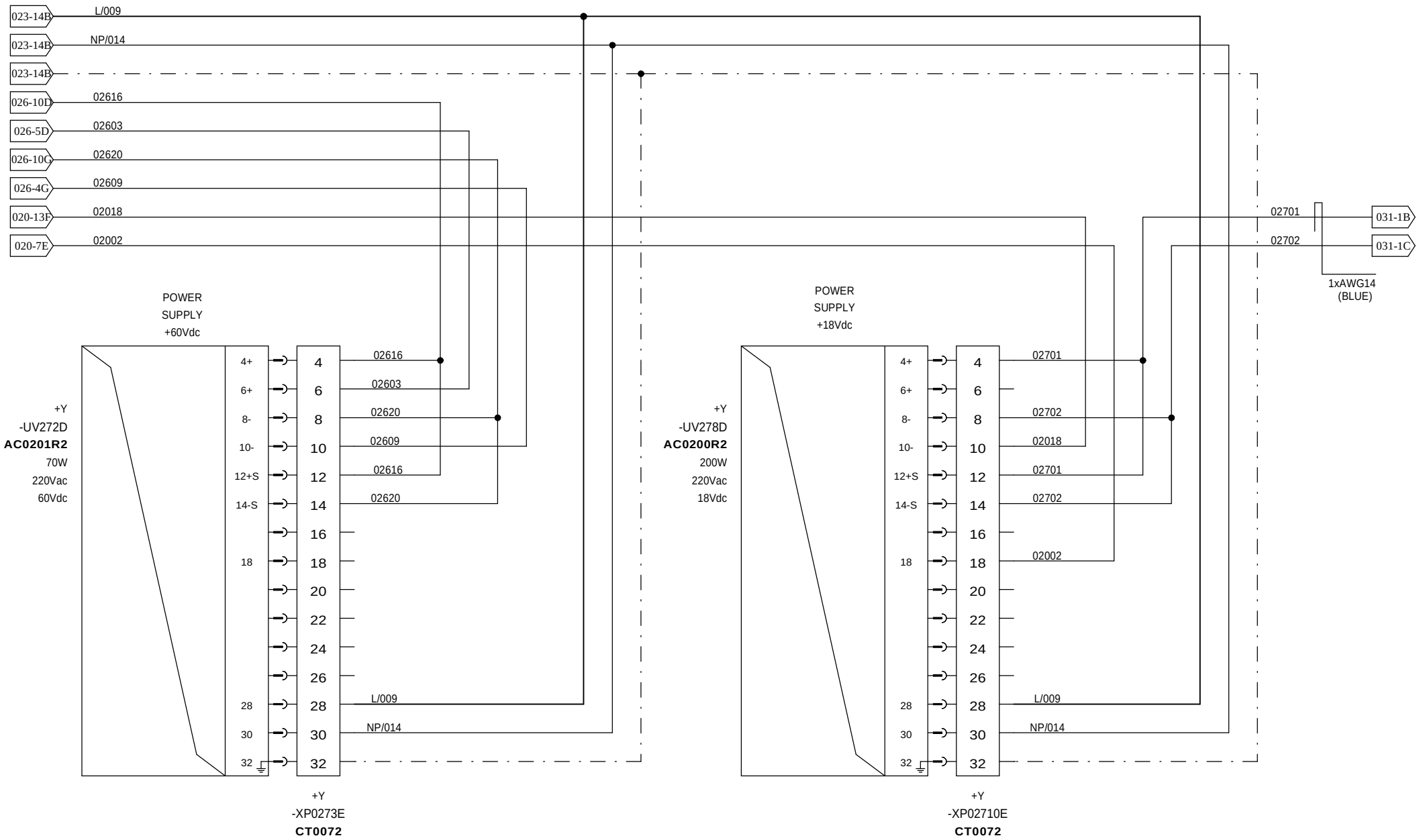

1	GENERAL UPGRADE	13/07/2004	Adecco	DATE	30/01/2003
3	THIRD EMISSION	09/03/2007	Borgonovo	REV.	Crivelli
8	MDT 1883	23/02/2015	Crivelli	CHECKED	Specker
REV	MODIFY	DATE	SIGNAT.	APPROVED	Crippa

LPE

TITLE +60Vdc POWER SUPPLY (Y-14)

SUBTITLE +18Vdc POWER SUPPLY (Y-15)

CUSTOMER LPE Epitaxial Technology

PROJECT SCHEMATIC WIRING MACHINE
400Vac 3PH+N 230Vac 1PH+N F=50Hz

DIS.: Borgonovo

RH4847E4

VALIDITY
FROM TO

SHEET 027
NEXT 028

IEC SYMBOLS

CONFIDENTIAL

This document and data disclosed herein is not to be reproduced used or disclosed in whole or in part to anyone without the permission of LPE Epitaxial Technology

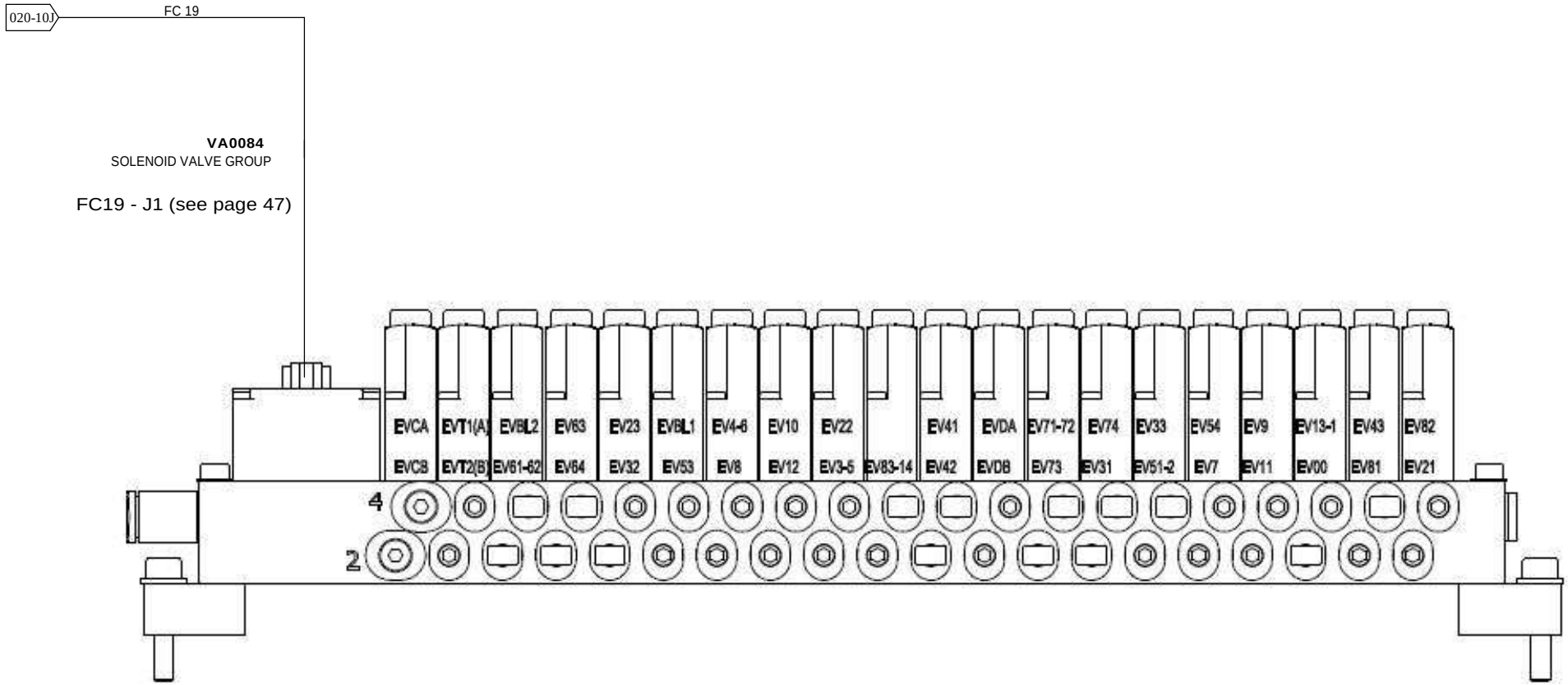

5	MDT 928	11/03/2011	Senno	DATE	30/01/2003
6	MDT1259	04/12/2012	Crivelli	REV.	Crivelli
8	MDT 1883	23/02/2015	Crivelli	CHECKED	Specker
REV	MODIFY	DATE	SIGNAT.	APPROVED	Crippa

TITLE SOLENOID VALVE GROUP

SUBTITLE

CUSTOMER LPE Epitaxial Technology

PROJECT SCHEMATIC WIRING MACHINE
400Vac 3PH+N 230Vac 1PH+N F=50Hz

DIS.: Borgonovo

RH4847E4

VALIDITY FROM TO

SHEET 028

NEXT 029

IEC SYMBOLS

CONFIDENTIAL

This document and data disclosed herein is not to be reproduced used or disclosed in whole or in part to anyone without the permission of LPE Epitaxial Technology

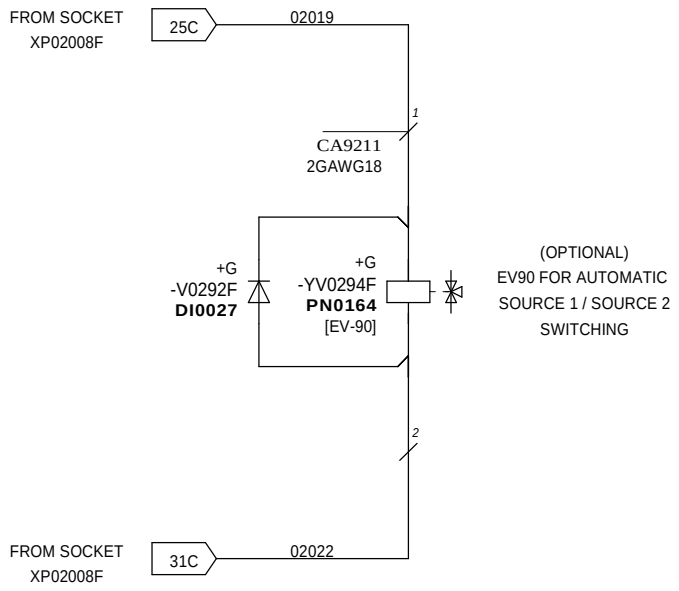

0	FIRST EMISSION	30/01/2003	Borgonovo	DATE	30/01/2003
1	GENERAL UPGRADE	13/07/2004	Adecco	REV.	Crivelli
8	MDT 1883	23/02/2015	Crivelli	CHECKED	Specker
REV	MODIFY	DATE	SIGNAT.	APPROVED	Crippa

TITLE VALVE EV90
SUBTITLE (OPTIONAL)
CUSTOMER LPE Epitaxial Technology

PROJECT SCHEMATIC WIRING MACHINE
400Vac 3PH+N 230Vac 1PH+N F=50Hz

VALIDITY
FROM TO

DIS.: Borgonovo

RH4847E4

SHEET 029
NEXT 030

IEC SYMBOLS

CONFIDENTIAL

This document and data disclosed herein is not to be reproduced used or disclosed in whole or in part to anyone without the permission of LPE Epitaxial Technology

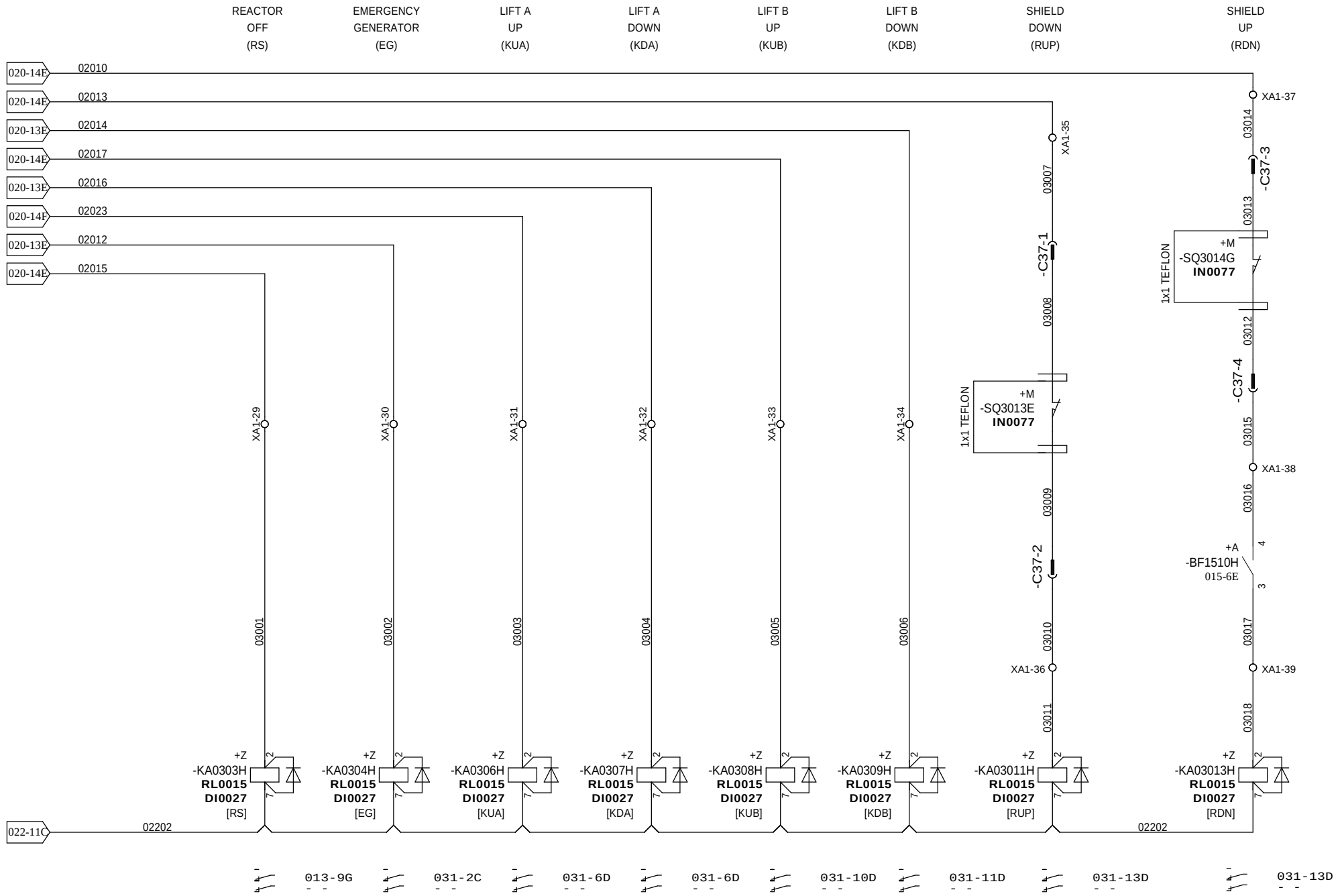

0	FIRST EMISSION	30/01/2003	Borgonovo	DATE	30/01/2003
4	MDT 606	24/07/2008	Proserpio	REV.	Crivelli
8	MDT 1883	23/02/2015	Crivelli	CHECKED	Specker
REV	MODIFY	DATE	SIGNAT.	APPROVED	Crippa

LPE

TITLE SCHEMATIC ELECTRIC DIAGRAM
SUBTITLE AUXILIARY RELAY
CUSTOMER LPE Epitaxial Technology

PROJECT SCHEMATIC WIRING MACHINE
400Vac 3PH+N 230Vac 1PH+N F=50Hz

DIS.: Borgonovo

RH4847E4

VALIDITY FROM TO

SHEET 030
NEXT 031

IEC SYMBOLS

CONFIDENTIAL This document and data disclosed herein is not to be reproduced used or disclosed in whole or in part to anyone without the permission of LPE Epitaxial Technology

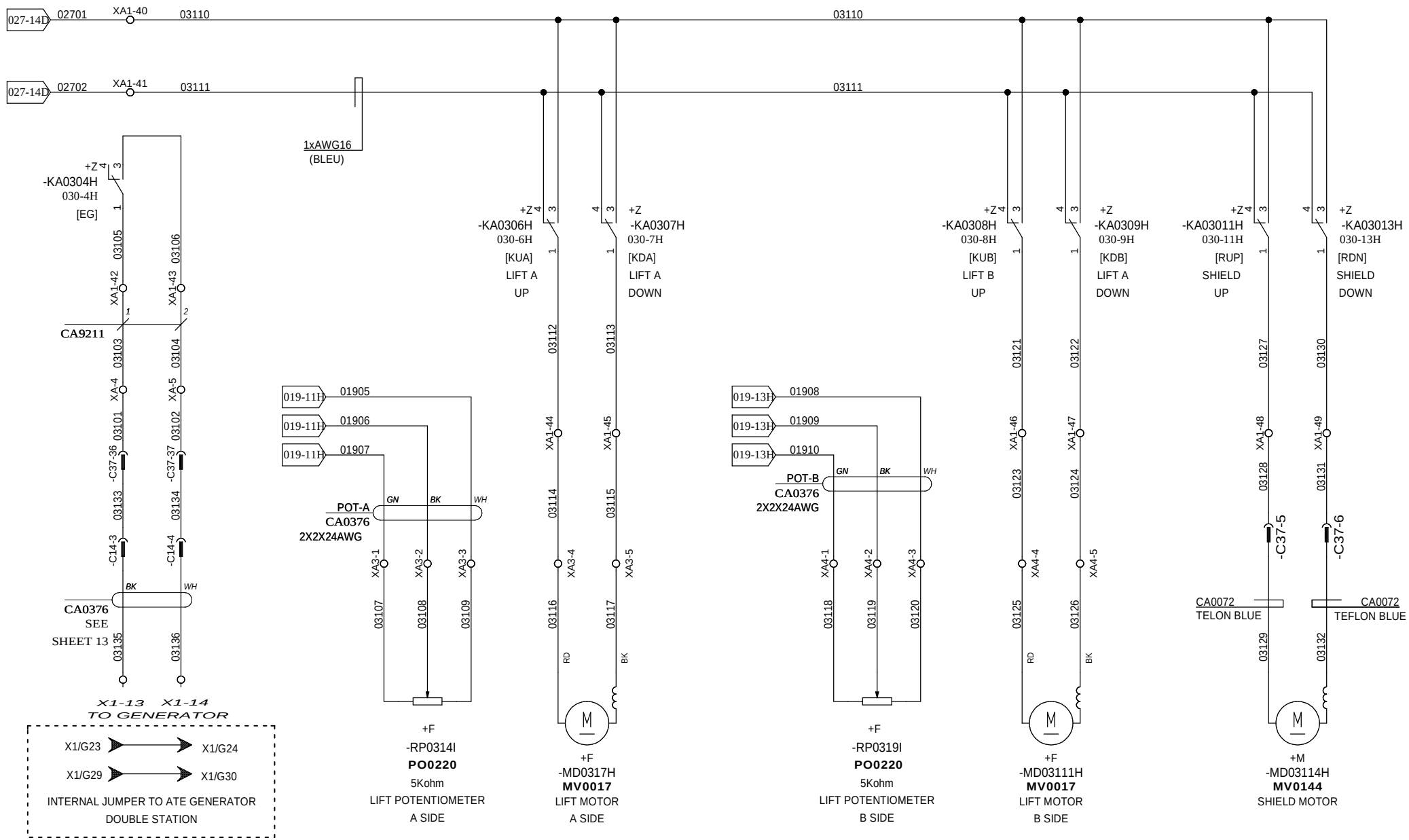

5	MDT	08/04/2011	Senno	DATE	30/01/2003
7	MDT1259	05/12/2012	Crivelli	REV.	Crivelli
8	MDT 1883	23/02/2015	Crivelli	CHECKED	Specker
REV	MODIFY	DATE	SIGNAT.	APPROVED	Crippa

LPE

TITLE SCHEMATIC ELECTRIC DIAGRAM
SUBTITLE AUXILIARY RELAY
CUSTOMER LPE Epitaxial Technology

PROJECT SCHEMATIC WIRING MACHINE
400Vac 3PH+N 230Vac 1PH+N F=50Hz

DIS.: Borgonovo

RH4847E4

VALIDITY FROM TO

SHEET 031
NEXT 032

IEC SYMBOLS

CONFIDENTIAL

This document and data disclosed herein is not to be reproduced used or disclosed in whole or in part to anyone without the permission of LPE Epitaxial Technology

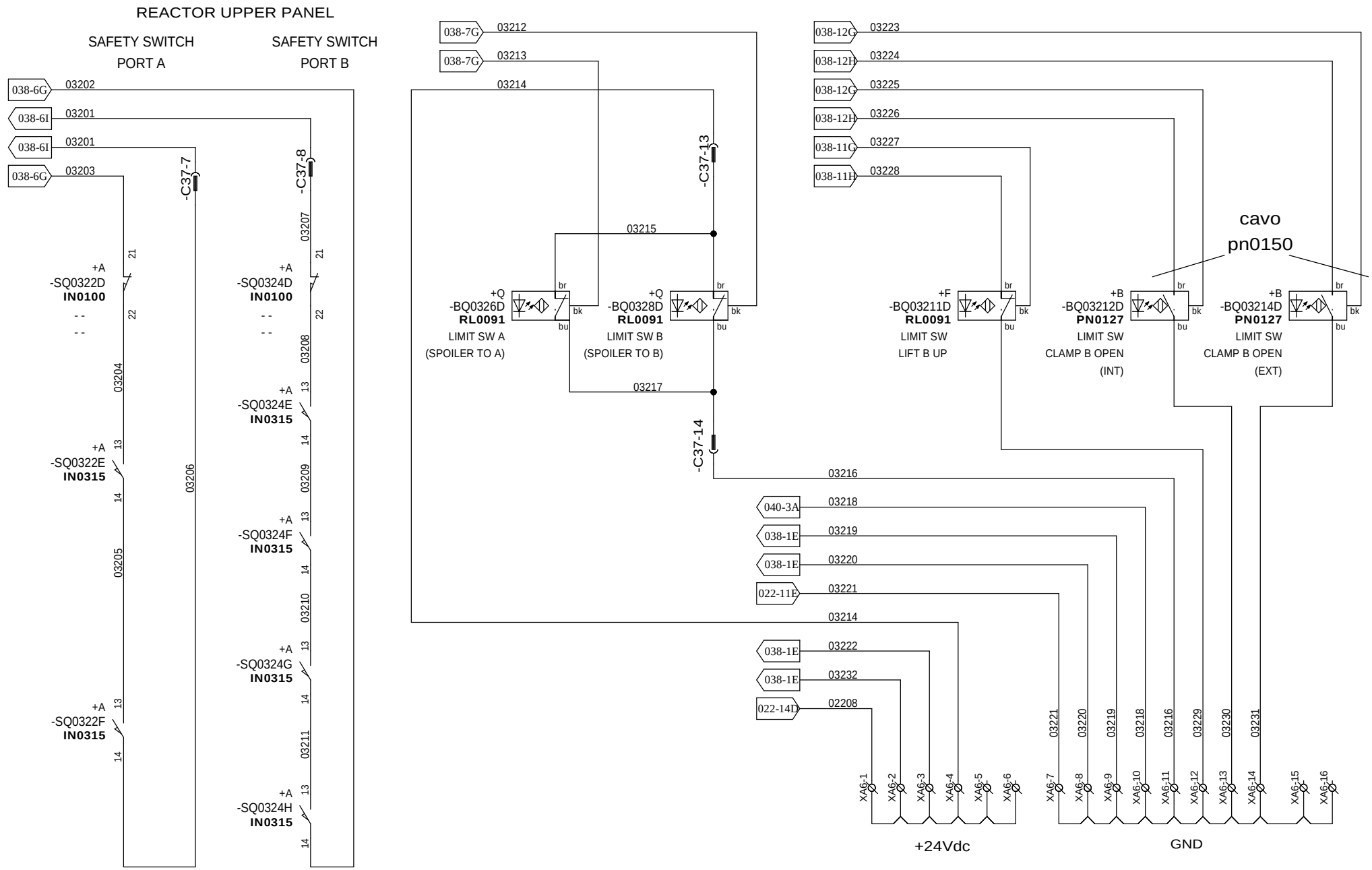

1	GENERAL UPGRADE	13/07/2004	Adecco	DATE	30/01/2003
4	MDT 606	24/07/2008	Proserpio	REV.	Crivelli
8	MDT 1883	23/02/2015	Crivelli	CHECKED	Specker
REV	MODIFY	DATE	SIGNAT.	APPROVED	Crippa

LPE

TITLE DIGITAL INPUT CONNECTION CARD
SUBTITLE 24Vdc POWER SUPPLY (A-43)
CUSTOMER LPE Epitaxial Technology

PROJECT SCHEMATIC WIRING MACHINE
400Vac 3PH+N 230Vac 1PH+N F=50Hz
DIS.: Borgonovo
RH4847E4

VALIDITY
FROM TO

SHEET 032
NEXT 033

IEC SYMBOLS

CONFIDENTIAL

This document and data disclosed herein is not to be reproduced
used or disclosed in whole or in part to anyone without the permission of LPE Epitaxial Technology

LIFT GROUP LIMIT SWITCH

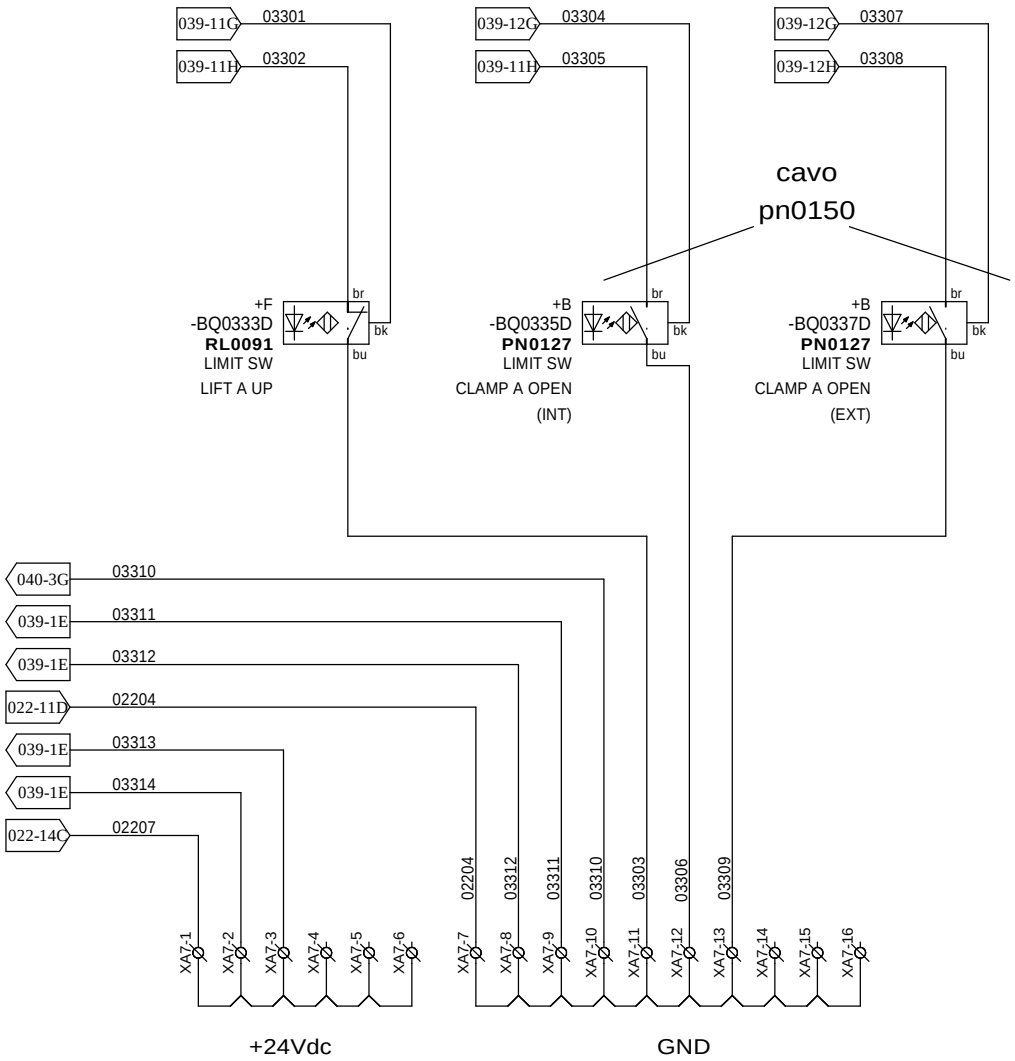

1	GENERAL UPGRADE	13/07/2004	Adecco	DATE	30/01/2003
4	MDT 606	24/07/2008	Proserpio	REV.	Crivelli
8	MDT 1883	23/02/2015	Crivelli	CHECKED	Specker
REV	MODIFY	DATE	SIGNAT.	APPROVED	Crippa

LPE

TITLE DIGITAL INPUT CONNECTION CARD
SUBTITLE 24Vdc POWER SUPPLY (A-71)
CUSTOMER LPE Epitaxial Technology

PROJECT SCHEMATIC WIRING MACHINE
400Vac 3PH+N 230Vac 1PH+N F=50Hz

VALIDITY
FROM TO

DIS.: Borgonovo

RH4847E4

SHEET 033
NEXT 034

IEC SYMBOLS

CONFIDENTIAL

This document and data disclosed herein is not to be reproduced used or disclosed in whole or in part to anyone without the permission of LPE Epitaxial Technology

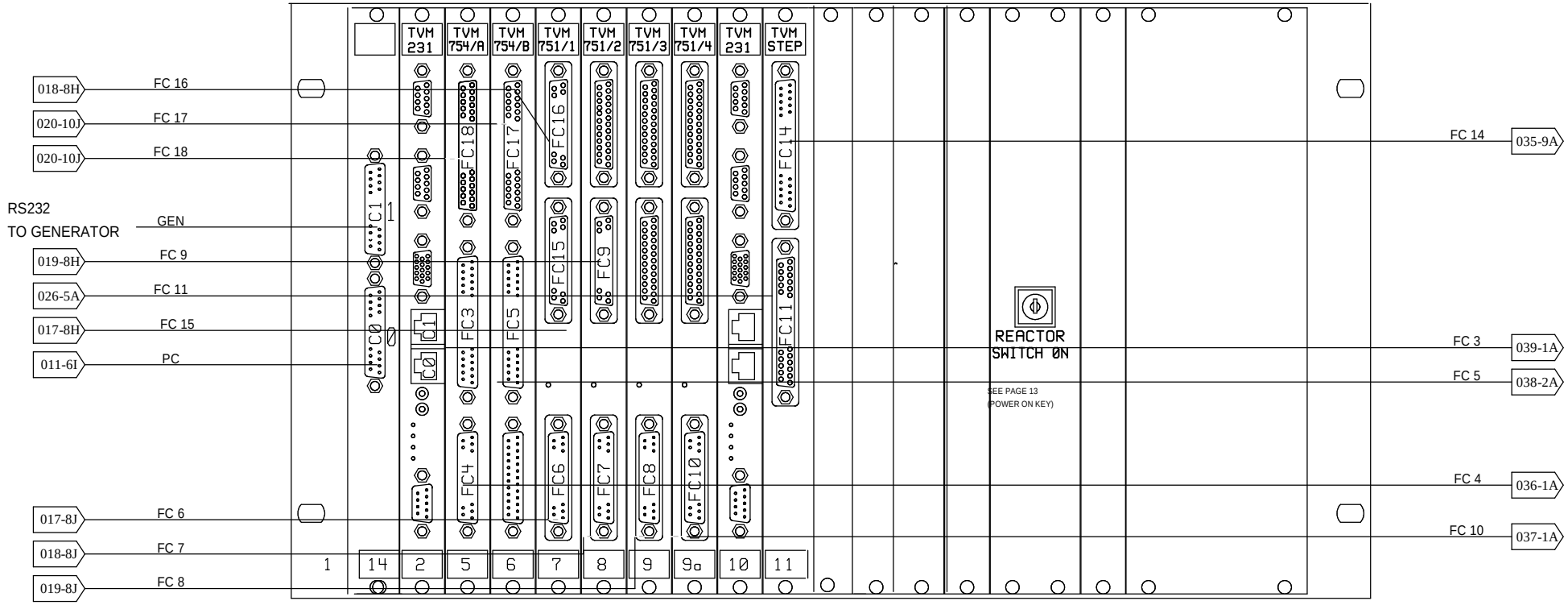

CABLE DESCRIPTIONS

CABLE	CONNECT	TO	NOTE
FC18	(X-5) J5	(Y-5) J3	Digital OUT
FC17	(X-6) J5	(Y-5) J4	Digital OUT
FC16	(X-7) J5	(Y-3) K3	Analog OUT
FC15	(X-7) J4	(Y-2) K3	Analog OUT
FC14	(X-11) J4	(G-18) A&B	Photocells Rotation
FC11	(X-11) J3	(Y-12,13)	Step Mot INP
FC10	(X-9a) J3	(A-33) J1	Analog INP
FC9	(X-8) J4	(Y-4) K3	Analog OUT
FC8	(X-9) J3	(Y-4) K2	Analog INP
FC7	(X-8) J3	(Y-3) K2	Analog INP
FC6	(X-7) J3	(Y-2) K2	Analog INP
FC5	(X-6) J4	(A-43) J1	Digital IN
FC4	(X-7) J3	(A-23) J1	Digital IN
FC3	(X-5) J4	(A-71) J1	Digital IN
C1	(X-14) J1	-	Generator
C0	(X-14) J0	-	Workstation

ITEM DESCRIPTIONS

SEE PAGE	ITEM	Q.ta	DESCRIPTION	CODE
-	1	1	RACK VMEBUS P1/POWER SUPPLY 350W	SZ0350
-	2	1	PCB TVM231	SZ0231
-	3			
-	4			
-	5	1	PCB TVM754 DIGITAL I/O	SZ0754
-	6	1	PCB TVM754 DIGITAL I/O	SZ0754
-	7	1	PCB TVM751 ANALOG I/O	SZ0751
-	8	1	PCB TVM751 ANALOG I/O	SZ0751
-	9	1	PCB TVM751 ANALOG I/O	SZ0751
-	9a	1	PCB TVM751 ANALOG I/O (Optional)	SZ0751
-	10	1	PCB TVM231/A1/STEPPER	SZ0231/ROT
-	11	1	PCB TVM STEPPER AUX	SZ0019
-	12			
-	13			
-	14	1	RS232 INTERFACE	SZ0125
-	15	1	COVER PANEL (REACTOR SWITCH ON KEY)	(IN0014)

REV	MODIFY	DATE	SIGNAT.	APPROVED	Crippa
8	MDT 1883	23/02/2015	Crivelli	CHECKED	Specker
0	FIRST EMISSION	30/01/2003	Borgonovo	REV.	Crivelli
				DATE	30/01/2003

LPE

TITLE FRONT VIEW RACK VME (X-1)

SUBTITLE

CUSTOMER LPE Epitaxial Technology

PROJECT SCHEMATIC WIRING MACHINE
400Vac 3PH+N 230Vac 1PH+N F=50Hz

DIS.: Borgonovo

RH4847E4

VALIDITY FROM TO

SHEET 034

NEXT 035

IEC SYMBOLS

CONFIDENTIAL

This document and data disclosed herein is not to be reproduced used or disclosed in whole or in part to anyone without the permission of LPE Epitaxial Technology

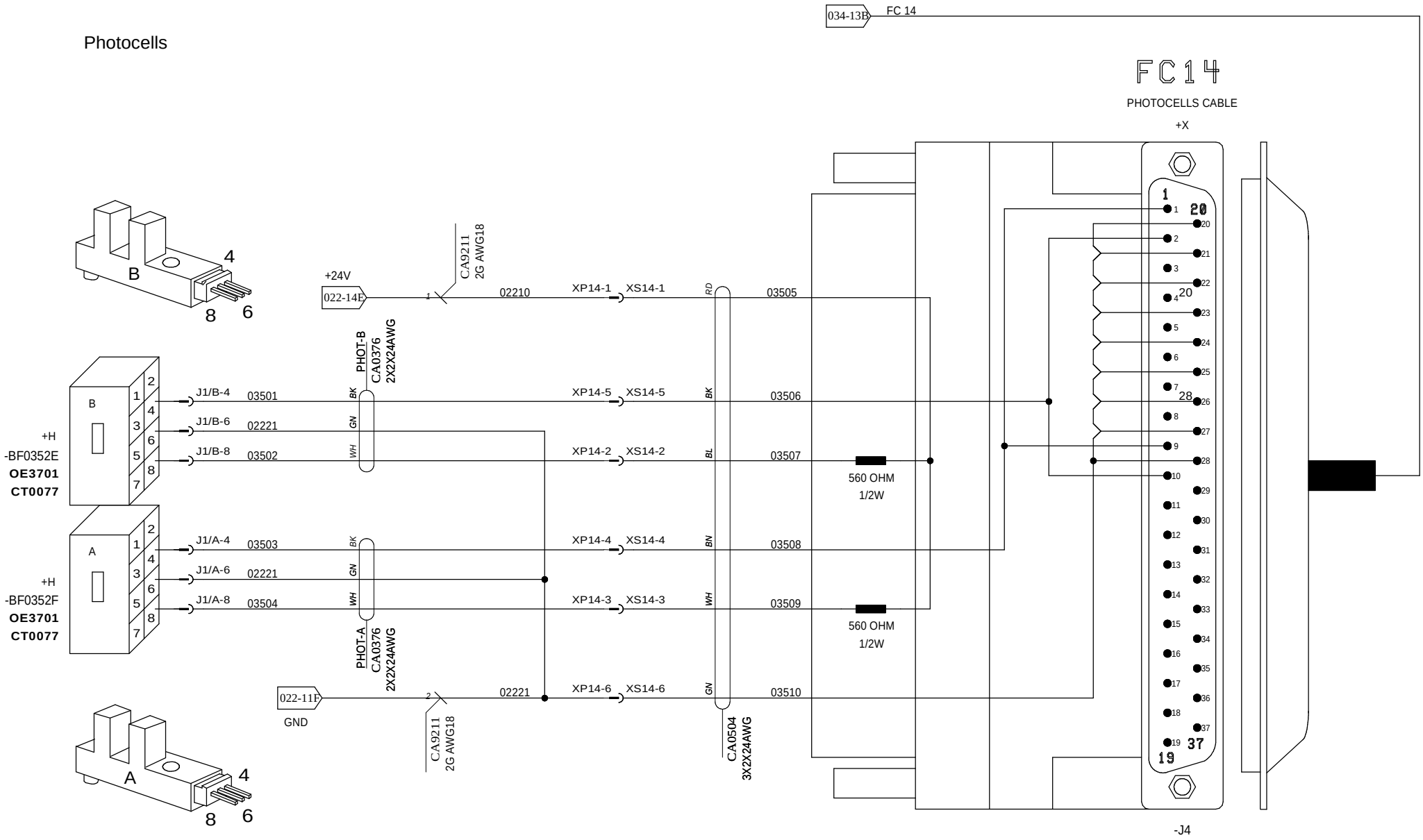

2	GENERAL UPGRADE	01/06/2005	Napoli	DATE	30/01/2003
4	MDT 606	24/07/2008	Proserpio	REV.	Crivelli
8	MDT 1883	23/02/2015	Crivelli	CHECKED	Specker
REV	MODIFY	DATE	SIGNAT.	APPROVED	Crippa

LPE

TITLE ROTATION PHOTOCELL
SUBTITLE (X-11)
CUSTOMER LPE Epitaxial Technology

PROJECT SCHEMATIC WIRING MACHINE
400Vac 3PH+N 230Vac 1PH+N F=50Hz

DIS.: Borgonovo

RH4847E4

VALIDITY
FROM TO

SHEET 035
NEXT 036

IEC SYMBOLS

CONFIDENTIAL

This document and data disclosed herein is not to be reproduced used or disclosed in whole or in part to anyone without the permission of LPE Epitaxial Technology

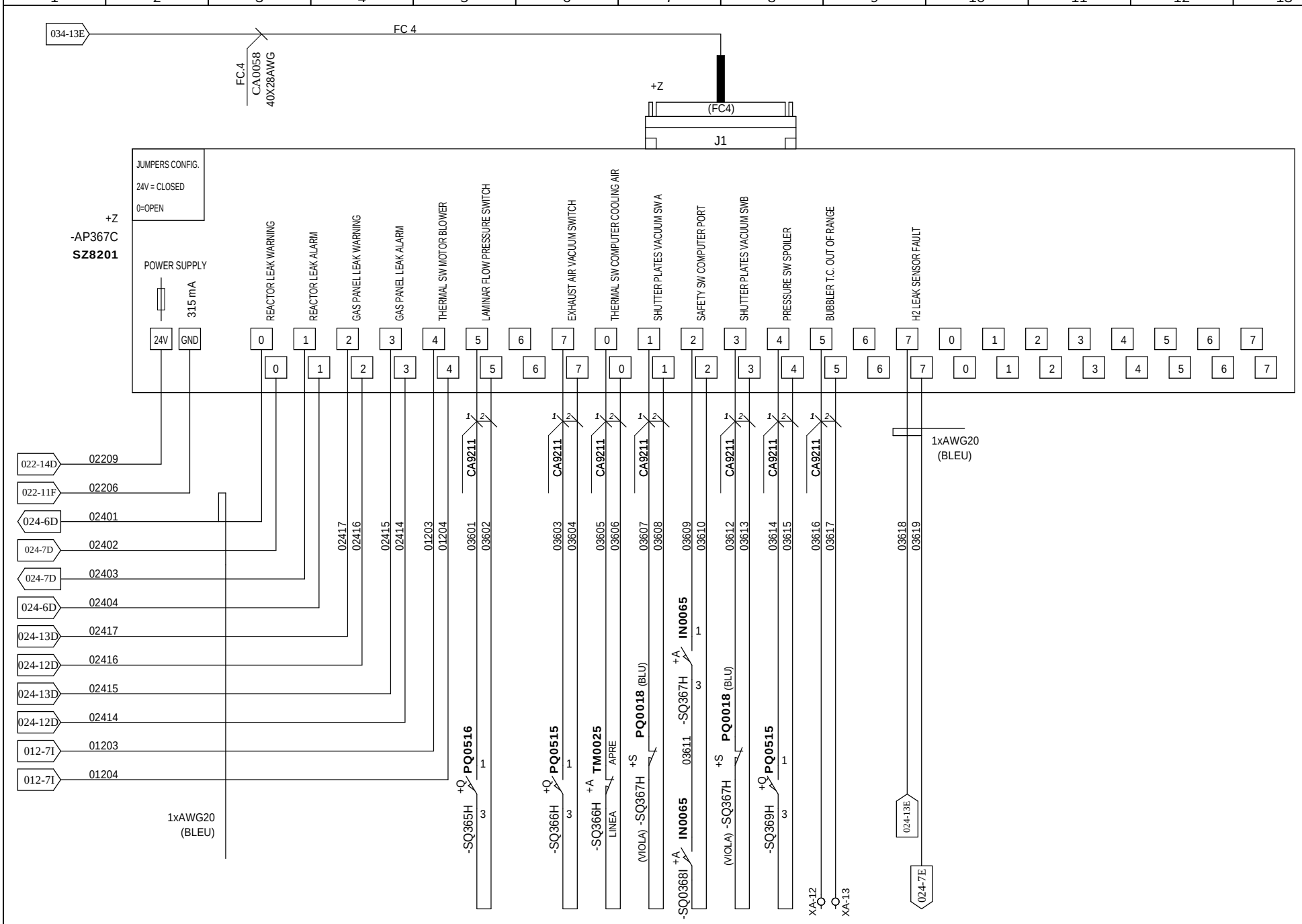

2	GENERAL UPGRADE	13/07/2004	Adecco	DATE	30/01/2003
4	MDT 606	24/07/2008	Proserpio	REV.	Crivelli
8	MDT 1883	23/02/2015	Crivelli	CHECKED	Specker
REV	MODIFY	DATE	SIGNAT.	APPROVED	Crippa

LPE

TITLE DIGITAL INPUT CONNECTION CARD
SUBTITLE (A-23)
CUSTOMER LPE Epitaxial Technology

PROJECT SCHEMATIC WIRING MACHINE
400Vac 3PH+N 230Vac 1PH+N F=50Hz

DIS.: Borgonovo

RH4847E4

VALIDITY
FROM TO

SHEET 036
NEXT 037

IEC SYMBOLS

CONFIDENTIAL

This document and data disclosed herein is not to be reproduced used or disclosed in whole or in part to anyone without the permission of LPE Epitaxial Technology

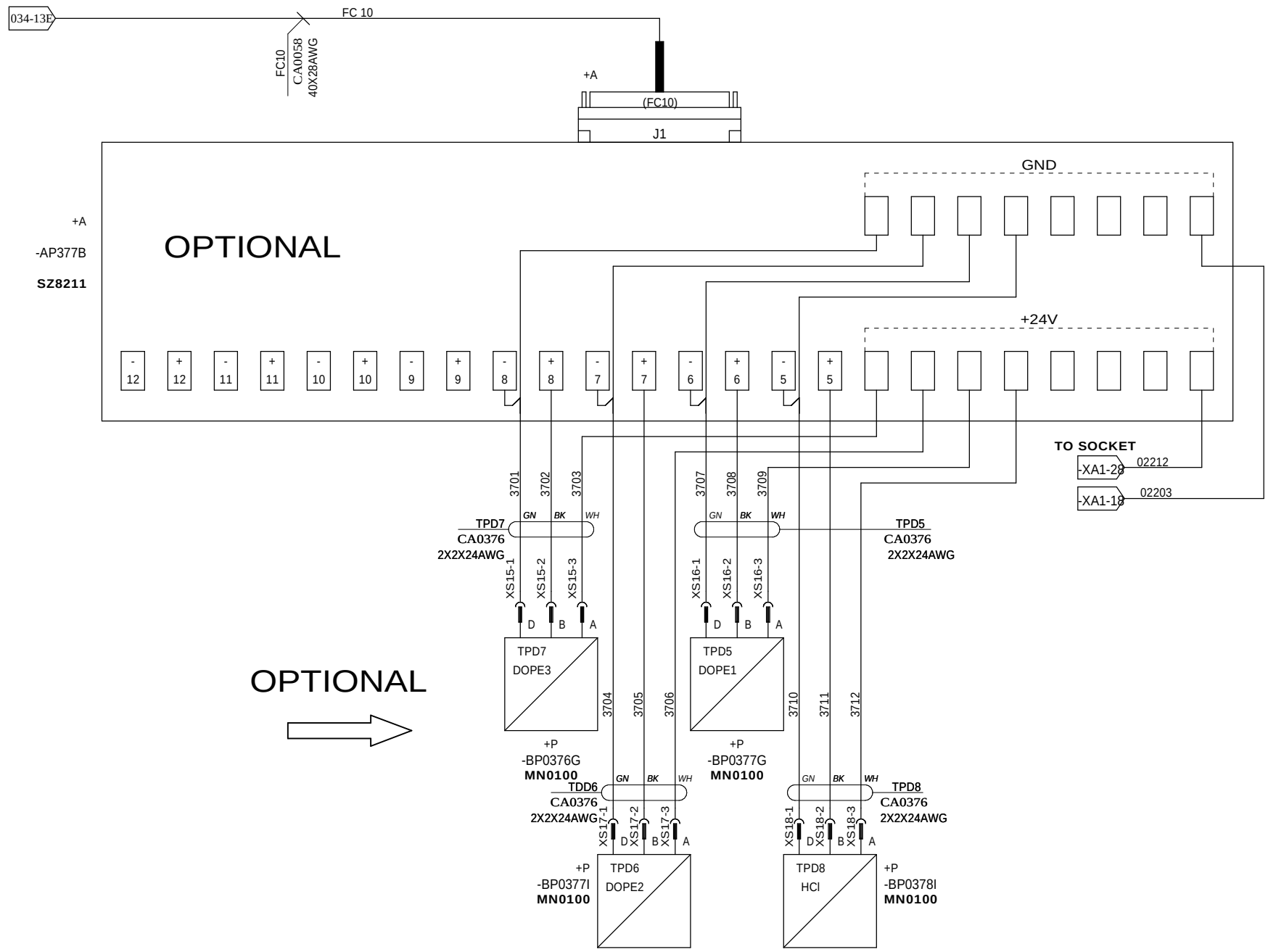

6	MDT	08/04/2011	Senno	DATE	30/01/2003
7	MDT1259	04/12/2012	Crivelli	REV.	Crivelli
8	MDT 1883	23/02/2015	Crivelli	CHECKED	Specker
REV	MODIFY	DATE	SIGNAT.	APPROVED	Crippa

LPE

TITLE PRESSURE TRANSDUCER
SUBTITLE CONNECTION CARD (A-33)
CUSTOMER LPE Epitaxial Technology

PROJECT SCHEMATIC WIRING MACHINE
400Vac 3PH+N 230Vac 1PH+N F=50Hz

VALIDITY
FROM TO

DIS.: Borgonovo

RH4847E4

SHEET 037
NEXT 038

IEC SYMBOLS

CONFIDENTIAL This document and data disclosed herein is not to be reproduced used or disclosed in whole or in part to anyone without the permission of LPE Epitaxial Technology

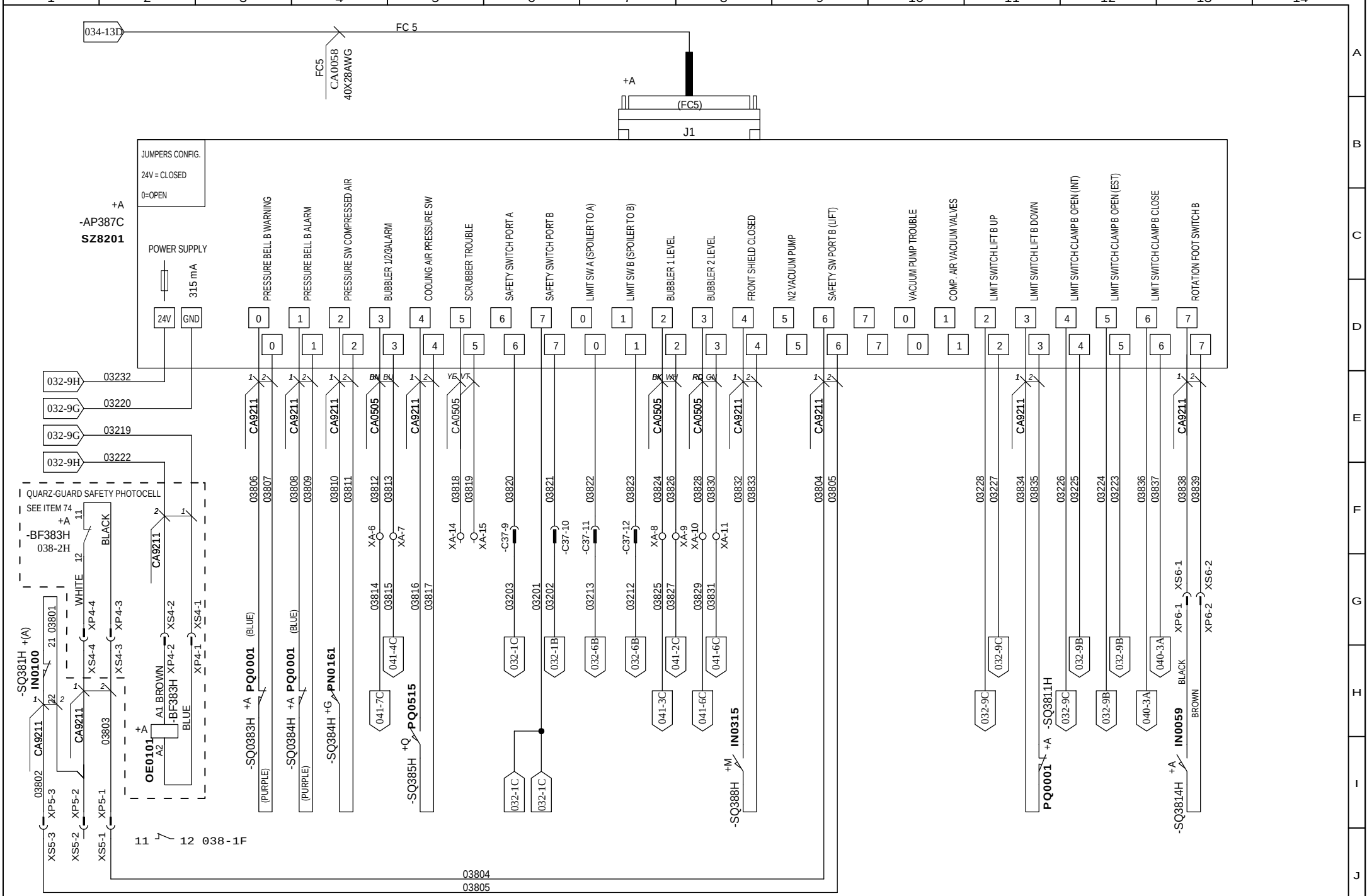

2	GENERAL UPGRADE	01/06/2005	Napoli	DATE	30/01/2003
4	MDT 606	24/07/2008	Proserpio	REV.	Crivelli
8	MDT 1883	23/02/2015	Crivelli	CHECKED	Specker
REV	MODIFY	DATE	SIGNAT.	APPROVED	Crippa

LPE

TITLE DIGITAL INPUT CONNECTION CARD
SUBTITLE (A-43)
CUSTOMER LPE Epitaxial Technology

PROJECT SCHEMATIC WIRING MACHINE
400Vac 3PH+N 230Vac 1PH+N F=50Hz
DIS.: Borgonovo
RH4847E4

VALIDITY
FROM TO

SHEET 038
NEXT 039

IEC SYMBOLS

CONFIDENTIAL This document and data disclosed herein is not to be reproduced used or disclosed in whole or in part to anyone without the permission of LPE Epitaxial Technology

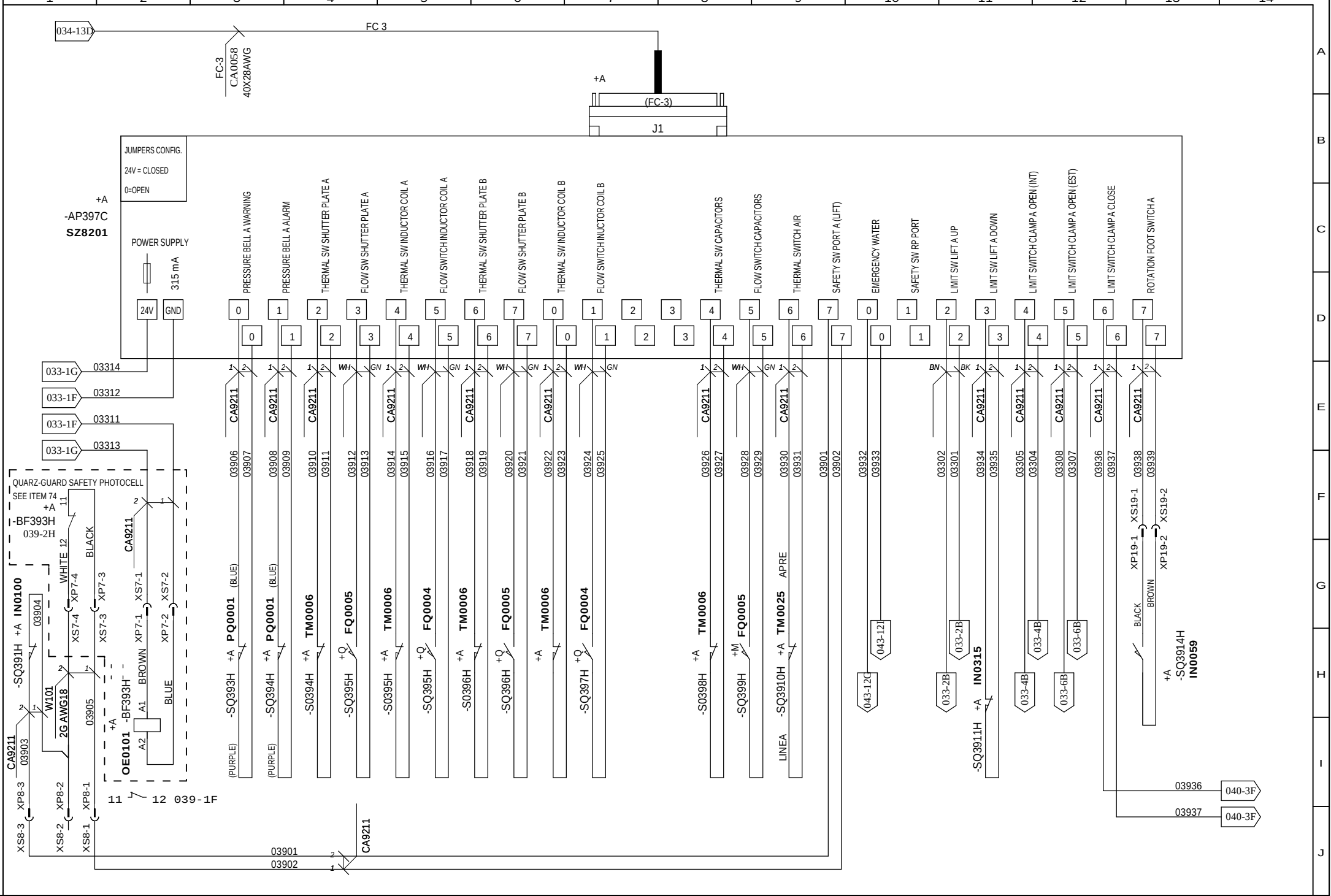

2	GENERAL UPGRADE	01/06/2005	Napoli	DATE	30/01/2003
4	MDT 606	24/07/2008	Proserpio	REV.	Crivelli
8	MDT 1883	23/02/2015	Crivelli	CHECKED	Specker
REV	MODIFY	DATE	SIGNAT.	APPROVED	Crippa

LPE

TITLE DIGITAL INPUT CONNECTION CARD
SUBTITLE (A-71)
CUSTOMER LPE Epitaxial Technology

PROJECT SCHEMATIC WIRING MACHINE
400Vac 3PH+N 230Vac 1PH+N F=50Hz
DIS.: Borgonovo
RH4847E4

VALIDITY
FROM TO
SHEET 039
NEXT 040

IEC SYMBOLS

CONFIDENTIAL

This document and data disclosed herein is not to be reproduced used or disclosed in whole or in part to anyone without the permission of LPE Epitaxial Technology

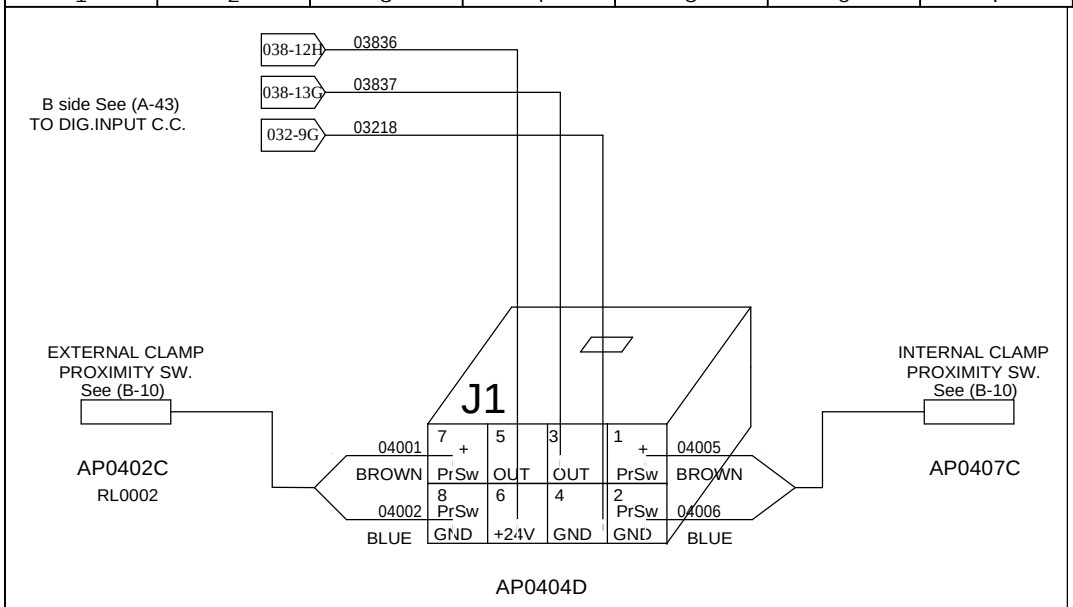

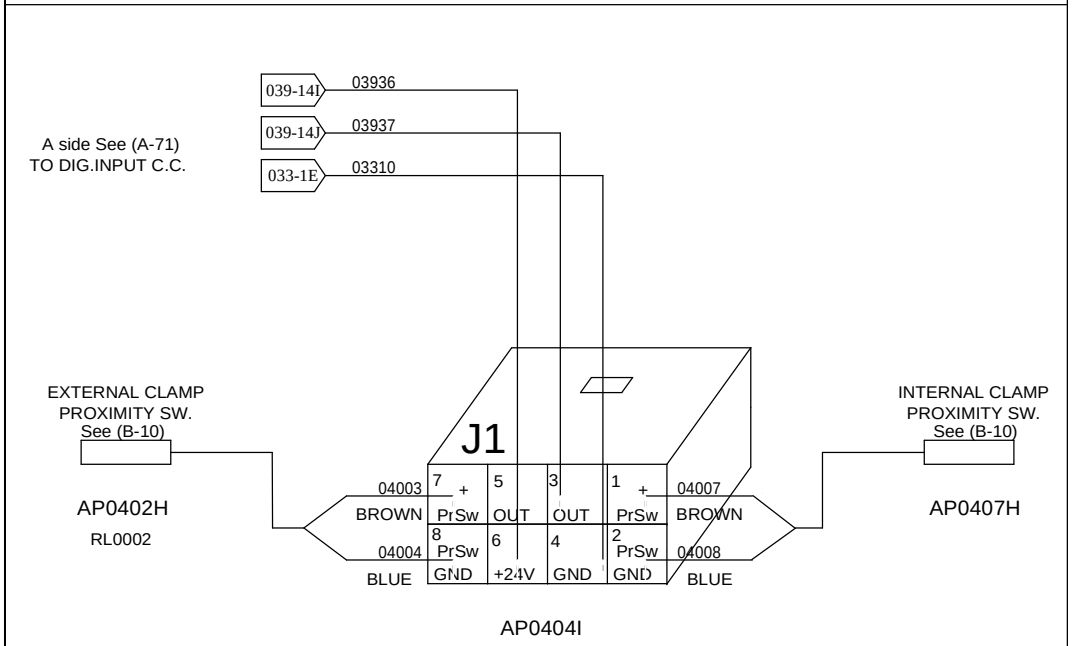

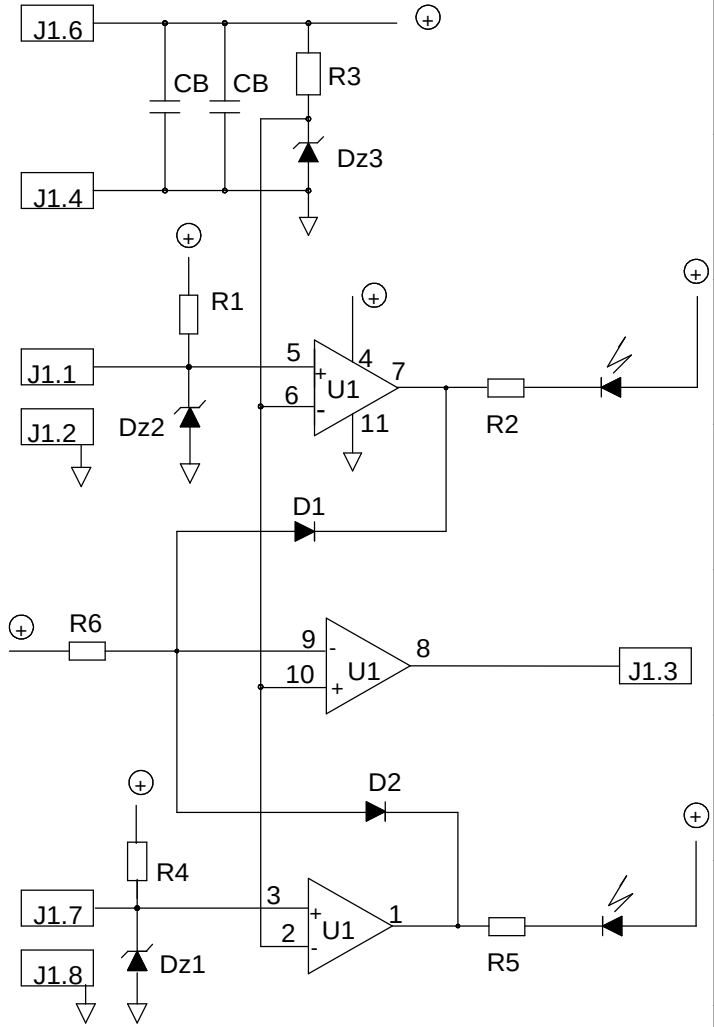

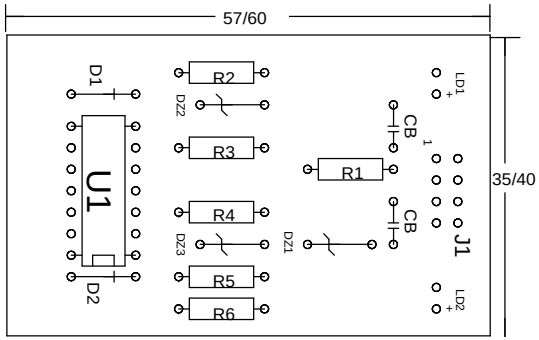

Prox.sw.activated: LED off

J1	BLOCK 4x2	-
LD1-LD2	LED rosso D3	
R1-R4	27K	-
R2-R5	2K2	-
R3-R6	10K	-
CB-CB	220nF	-
U1	LM224	-
D1-D2	1N4148	-
Dz1-Dz2	8.2V	-
Dz3	5.1V	-

REV	MODIFY	DATE	SIGNAT.	APPROVED	Crippa
8	MDT 1883	23/02/2015	Crivelli	CHECKED	Specker
1	GENERAL UPGRADE	13/07/2004	Adecco	REV.	Crivelli
0	FIRST EMISSION	30/01/2003	Borgonovo	DATE	30/01/2003

LPE

TITLE PROXIMITY SWITCH AMPLIFIER
SUBTITLE (A-49)
CUSTOMER LPE Epitaxial Technology

PROJECT SCHEMATIC WIRING MACHINE
400Vac 3PH+N 230Vac 1PH+N F=50Hz
DIS.: Borgonovo
RH4847E4

VALIDITY FROM TO

SHEET 040
NEXT 041

IEC SYMBOLS

CONFIDENTIAL

This document and data disclosed herein is not to be reproduced
used or disclosed in whole or in part to anyone without the permission of LPE Epitaxial Technology

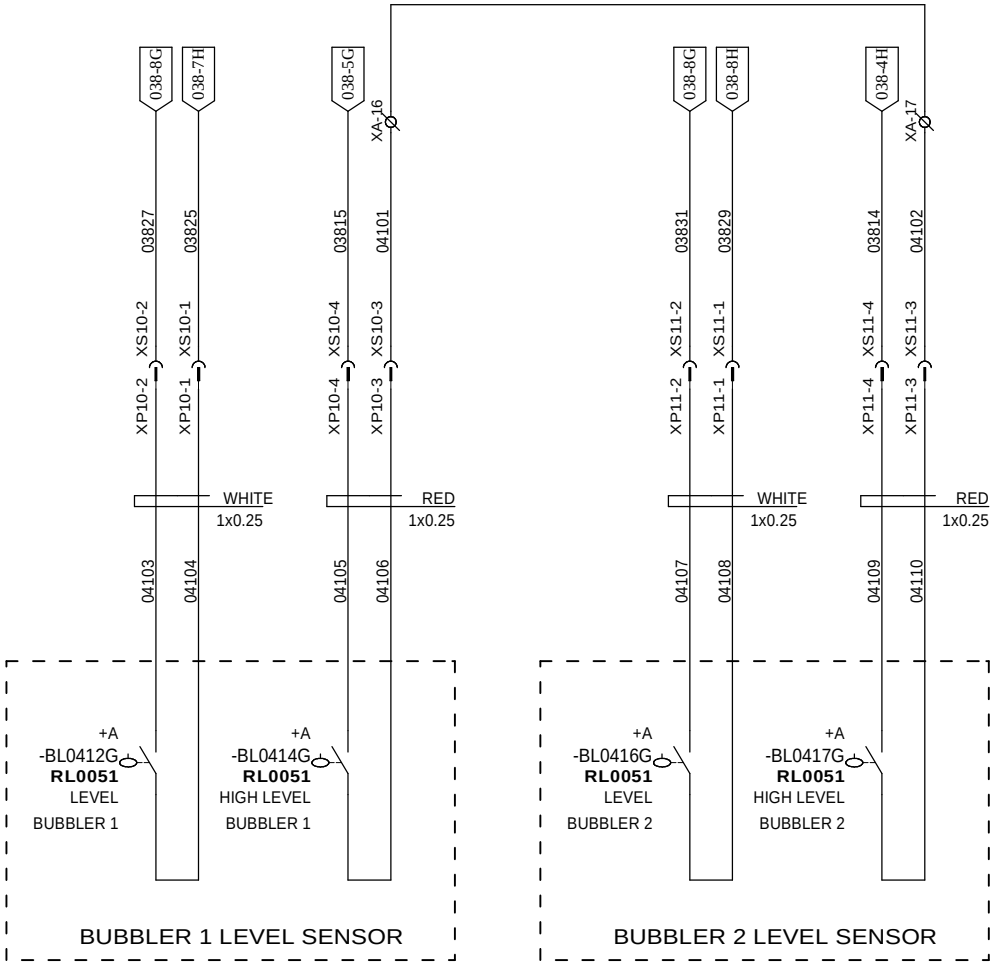

1	GENERAL UPGRADE	13/07/2004	Adecco	DATE	30/01/2003
2	GENERAL UPGRADE	01/06/2005	Napoli	REV.	Crivelli
8	MDT 1883	23/02/2015	Crivelli	CHECKED	Specker
REV	MODIFY	DATE	SIGNAT.	APPROVED	Crippa

TITLE BUBBLER LEVEL SENSOR CONNECTIO

SUBTITLE

CUSTOMER LPE Epitaxial Technology

PROJECT SCHEMATIC WIRING MACHINE
400Vac 3PH+N 230Vac 1PH+N F=50Hz

VALIDITY FROM TO

DIS.: Borgonovo

RH4847E4

SHEET 041

NEXT 042

IEC SYMBOLS

CONFIDENTIAL

This document and data disclosed herein is not to be reproduced used or disclosed in whole or in part to anyone without the permission of LPE Epitaxial Technology

WIRE W122
WINDOWS WORKSTATION SERIAL LINE
PIN CONFIGURATION

PE 2061 S

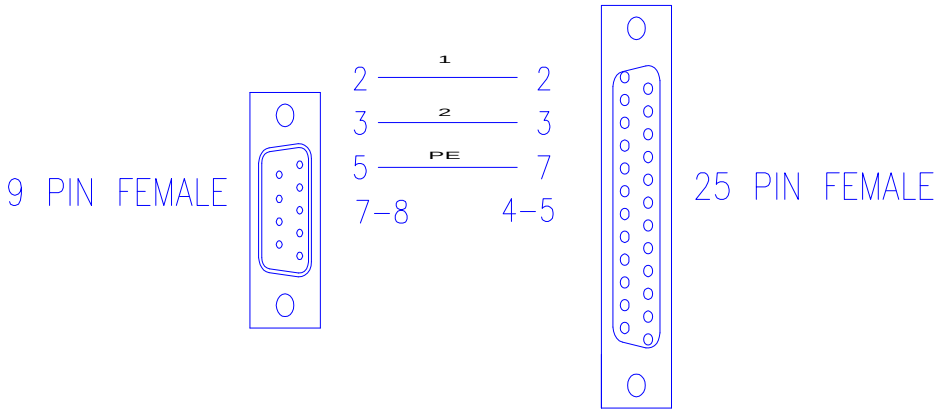

MFC WIRES
PIN CONFIGURATION

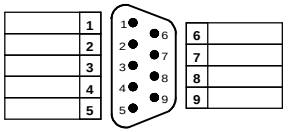

CODE HOUSING CT0361 CT0342

1	COMMAND IN	RD	8
2	SIG. COMMON	BN	10
4	-15 Vdc	WH	6
6	CMD. COMMON	GN	1
7	FLOW SIG. OUT	BK	2
8	+15 Vdc	BU	5
	SHIELD		14

CA0504

-X04214B

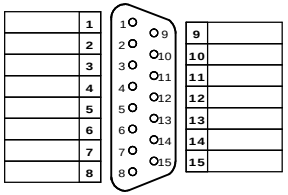

CODE HOUSING CT0363 CT0349

FOR TEST
15 PIN/M
JUMPERS
1-10
2-8

WIRE W123
GENERATOR IFC150/2 SERIAL LINE
PIN CONFIGURATION
NEW VERSION

PE 2061 S

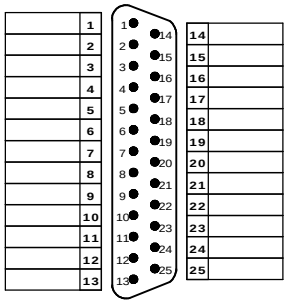

CONNETTORE GUSCIO CTO368 CTO355

X1-37	2	2
X1-38	1	3
X1-39	PE	7

CA0350

WIRE W123
GENERATOR IFC150/2 SERIAL LINE
PIN CONFIGURATION

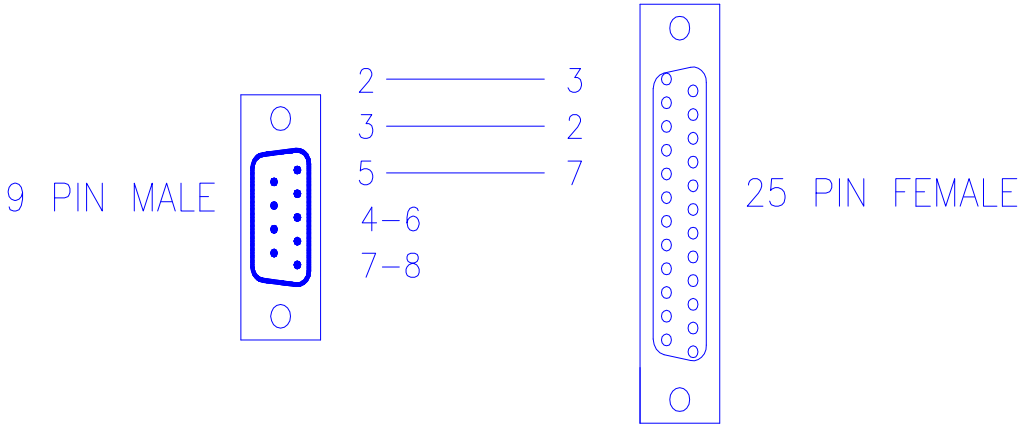

REV	MODIFY	DATE	SIGNAT.	APPROVED	Crippa
5	MDT	11/03/2011	Senno	DATE	30/01/2003
6	MDT1259	04/12/2012	Crivelli	REV.	Crivelli
8	MDT 1883	23/02/2015	Crivelli	CHECKED	Specker

LPE

TITLE MULTIPLES WIRE
SUBTITLE PIN CONFIGURATION
CUSTOMER LPE Epitaxial Technology

PROJECT SCHEMATIC WIRING MACHINE
400Vac 3PH+N 230Vac 1PH+N F=50Hz

DIS.: Borgonovo

RH4847E4

VALIDITY FROM TO

SHEET 042
NEXT 043

IEC SYMBOLS

CONFIDENTIAL

This document and data disclosed herein is not to be reproduced used or disclosed in whole or in part to anyone without the permission of LPE Epitaxial Technology

CONFIGURATION

THERMAL SWITCH SETTING A/B	40°C
PRESSURE SWITCH SETTING	1 bar
TIMER SETTING:	
- TIME RANGE	1/10s
- INTERVENTION TIME	5s
- TIMER TYPE	C
- R2	TIMED

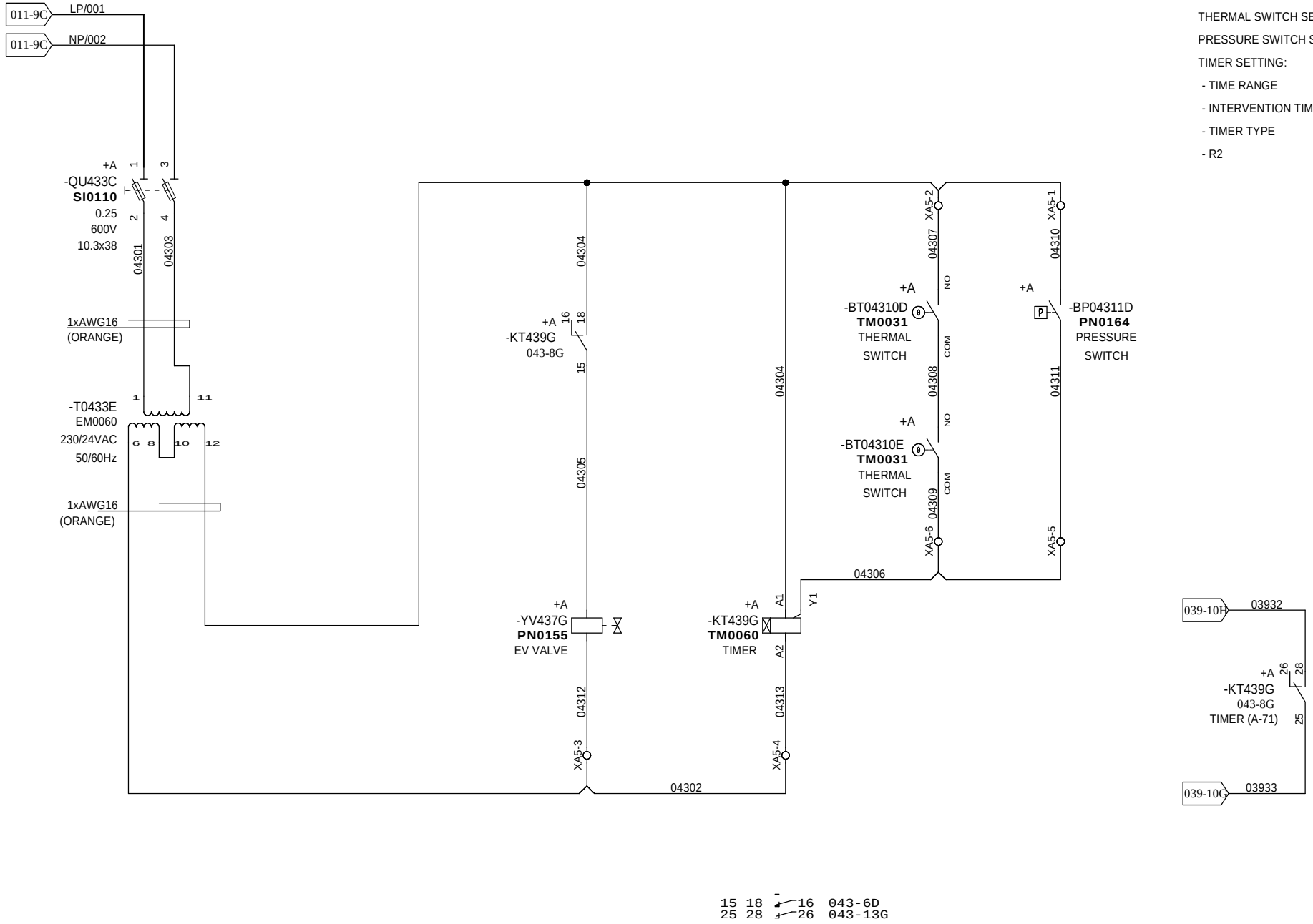

1	GENERAL UPGRADE	13/07/2004	Adecco	DATE	30/01/2003
5	MDT 928	11/03/2011	Senno	REV.	Crivelli
8	MDT 1883	23/02/2015	Crivelli	CHECKED	Specker
REV	MODIFY	DATE	SIGNAT.	APPROVED	Crippa

LPE

TITLE EMERGENCY WATER (OPTIONAL)

SUBTITLE SCHEMATIC ELECTRIC DIAGRAM

CUSTOMER LPE Epitaxial Technology

PROJECT SCHEMATIC WIRING MACHINE
400Vac 3PH+N 230Vac 1PH+N F=50Hz

DIS.: Borgonovo

RH4847E4

VALIDITY FROM TO

SHEET 043

NEXT 044

IEC SYMBOLS

CONFIDENTIAL This document and data disclosed herein is not to be reproduced used or disclosed in whole or in part to anyone without the permission of LPE Epitaxial Technology

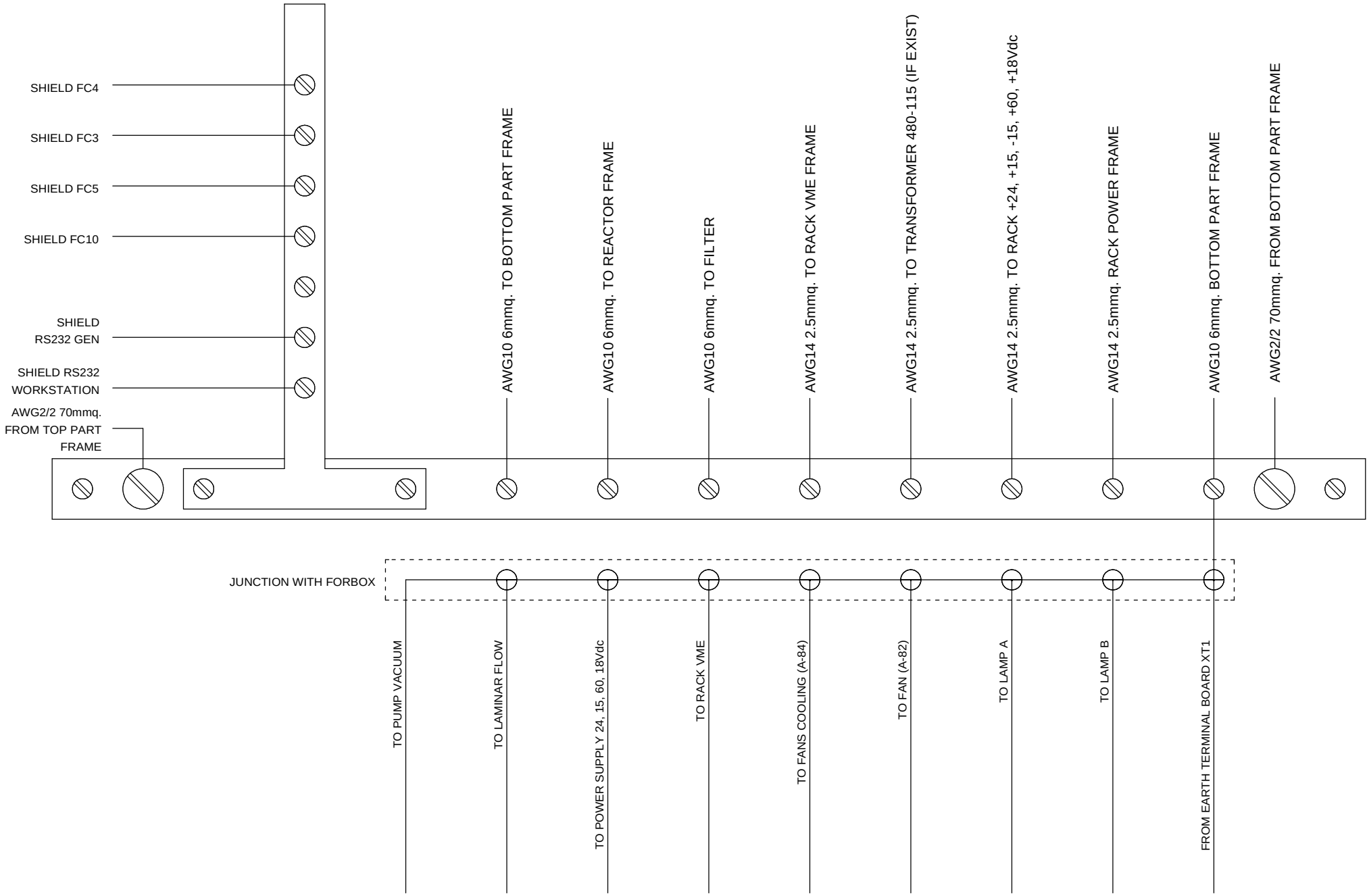

				DATE	30/01/2003
0	FIRST EMISSION	30/01/2003	Borgonovo	REV.	Crivelli
8	MDT 1883	23/02/2015	Crivelli	CHECKED	Specker
REV	MODIFY	DATE	SIGNAT.	APPROVED	Crippa

LPE

TITLE EARTH BAR

SUBTITLE

CUSTOMER LPE Epitaxial Technology

PROJECT SCHEMATIC WIRING MACHINE
400Vac 3PH+N 230Vac 1PH+N F=50Hz

DIS.: Borgonovo

RH4847E4

VALIDITY FROM TO

SHEET 044

NEXT 045

IEC SYMBOLS

CONFIDENTIAL

This document and data disclosed herein is not to be reproduced used or disclosed in whole or in part to anyone without the permission of LPE Epitaxial Technology

3 H2 LEAK SENSOR

(for 2 sensors option see page 24)

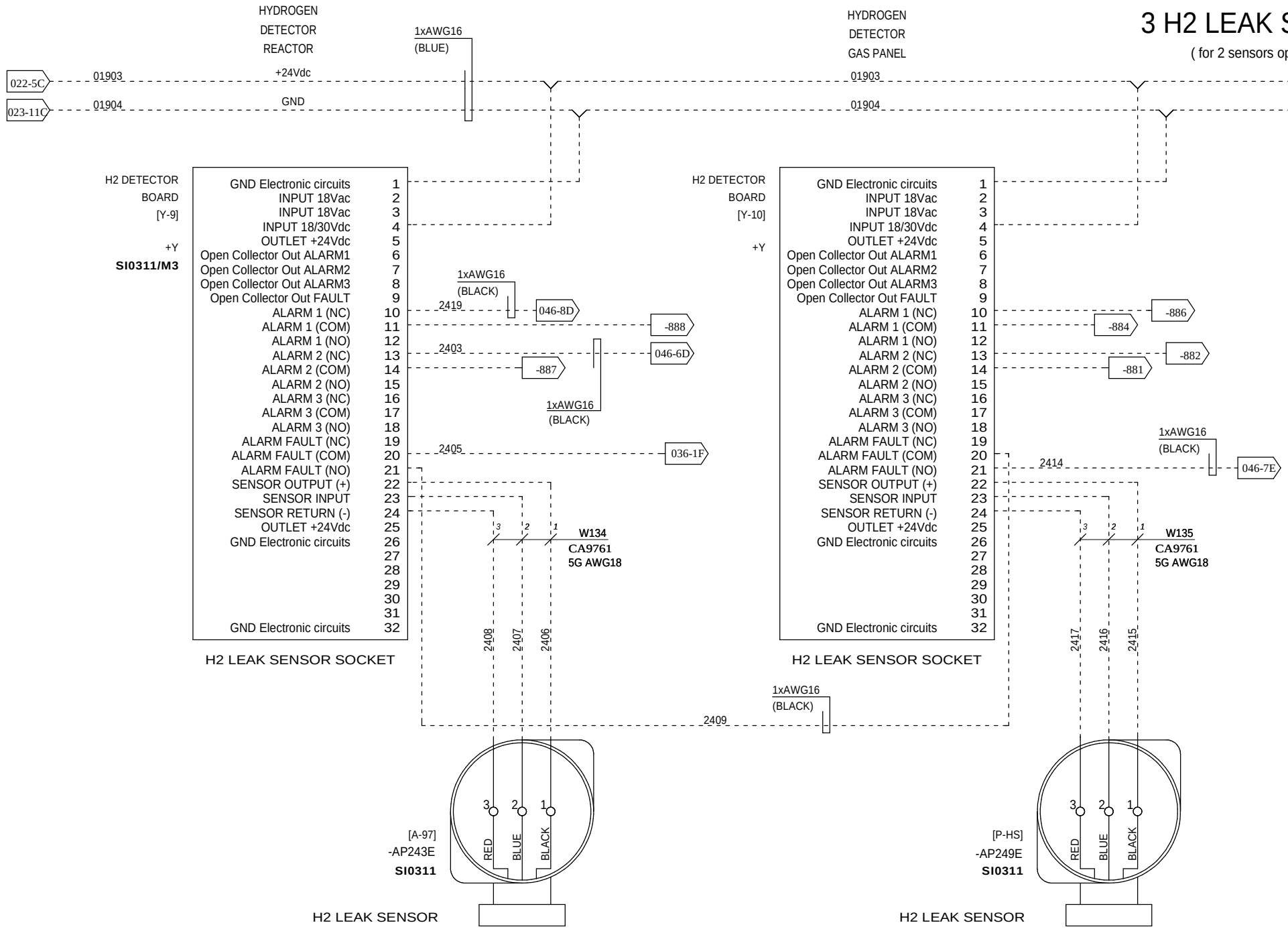

				DATE	24/07/2008	LPE	TITLE H2 DETECTOR BOARD (Y-9)(Y-10)	PROJECT SCHEMATIC WIRING MACHINE 400Vac 3PH+N 230Vac 1PH+N F=50Hz	VALIDITY FROM TO		
				REV.	Proserpio		SUBTITLE				
4	MDT 606	24/07/2008	Proserpio	CHECKED	Maccalli		CUSTOMER LPE Epitaxial Technology	DIS.: Proserpio	RH4847E4	SHEET 045	
REV	MODIFY	DATE	SIGNAT.	APPROVED	Crippa					NEXT 046	

IEC SYMBOLS

CONFIDENTIAL

This document and data disclosed herein is not to be reproduced used or disclosed in whole or in part to anyone without the permission of LPE Epitaxial Technology

3 H2 LEAK SENSOR

(for 2 sensors option see page 24)

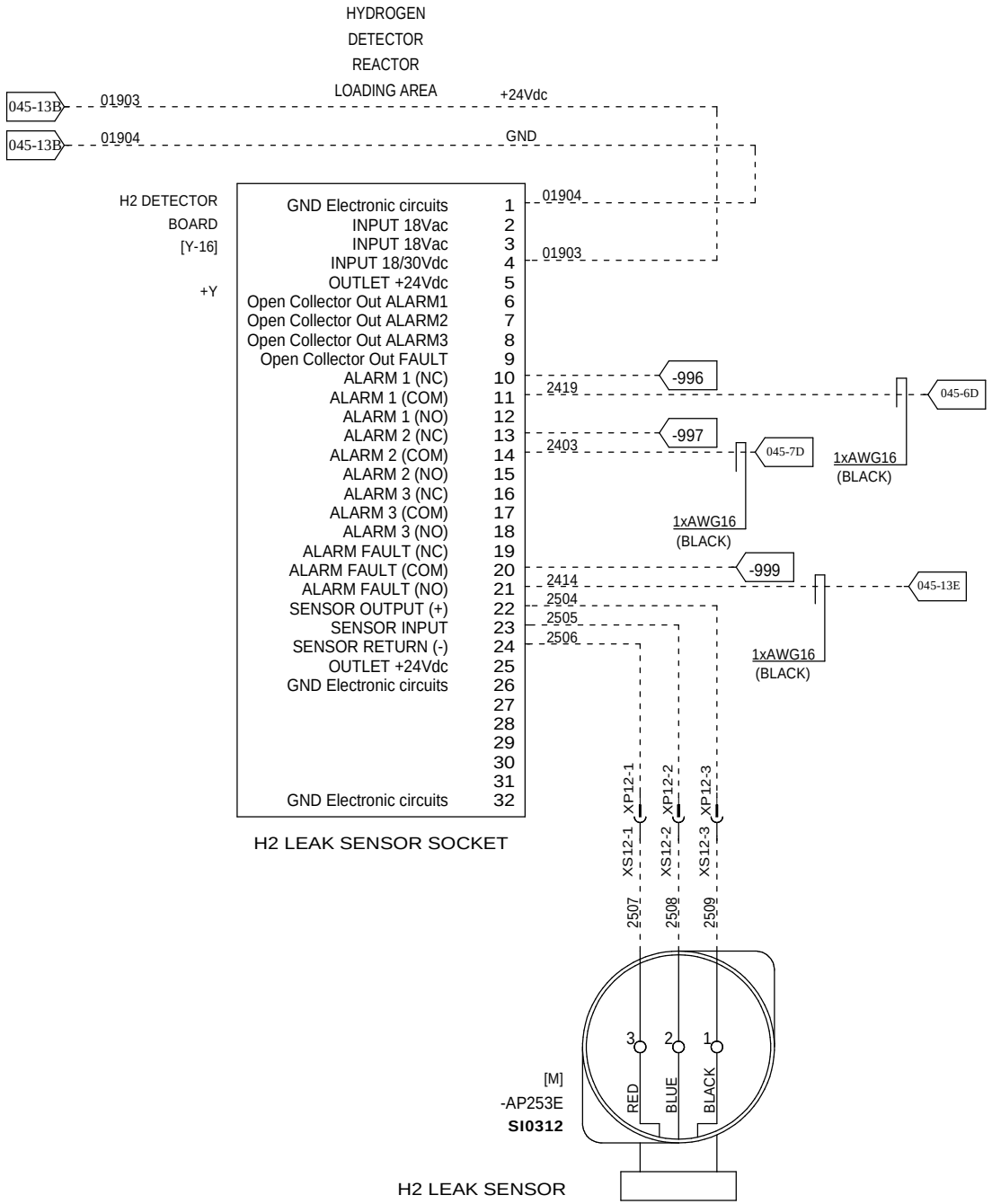

				DATE	24/07/2008	LPE	TITLE	TRD LEAK SENSOR (Y-16)	PROJECT	SCHEMATIC WIRING MACHINE 400Vac 3PH+N 230Vac 1PH+N F=50Hz	VALIDITY FROM TO
				REV.	Proserpio		SUBTITLE	OPTIONAL			
4	MDT 606	24/07/2008	Proserpio	CHECKED	Maccalli		CUSTOMER	LPE Epitaxial Technology	DIS.:	Proserpio	RH4847E4 SHEET 046
REV	MODIFY	DATE	SIGNAT.	APPROVED	Crippa						NEXT 047

IEC SYMBOLS

CONFIDENTIAL

This document and data disclosed herein is not to be reproduced used or disclosed in whole or in part to anyone without the permission of LPE Epitaxial Technology

44 PIN FEMALE	37 PIN MALE	9 PIN MALE
(FC19J1) see page 28	(FC19J2) see page 20	(FC19J5) see page 20
1	1	
2	2	
... TO	... TO	
16	16	
17		8
18		9
19		7
20	20	
21	21	
... TO	... TO	
35	35	
36		1
37		2
38		3
39		4
40		6
41		
42		
43	17	
44		5

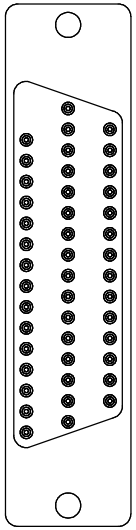

(FC19J1) cod.lpe CA0303

REV	MODIFY	DATE	SIGNAT.	APPROVED	
5	MDT 928	11/03/2011	Senno	DATE	
6	MDT1259	04/12/2012	Crivelli	REV.	Crivelli
8	MDT 1883	23/02/2015	Crivelli	CHECKED	Specker

TITLE CABLE FC 19

SUBTITLE

CUSTOMER LPE Epitaxial Technology

PROJECT SCHEMATIC WIRING MACHINE
400Vac 3PH+N 230Vac 1PH+N F=50Hz

DIS.: RH4847E4

VALIDITY FROM TO

SHEET 047

NEXT 047

CONFIDENTIAL This document and data disclosed herein is not to be reproduced used or disclosed in whole or in part to anyone without the permission of LPE Epitaxial Technology

REV	MODIFY	DATE	SIGNAT.	APPROVED
4	MDT 606	24/07/2008	Proserpio	Crippa
5	MDT	08/04/2011	Senno	Crivelli
8	MDT 1883	23/02/2015	Crivelli	Specker

				+A				
				XA				
				TERMINAL CLAMP				
GENERATOR EMERGENCY PUSH BUTTON	01316			1		CT0103	SE01312D	01314
GENERATOR EMERGENCY PUSH BUTTON			SE01312D	2		CT0103		01315
GENERATOR EMERGENCY PUSH BUTTON	01317			3		CT0103	XS0	01321
EMERGENCY GENERATOR (EG)	03101		X1	4		CT0103	XA1	03103
EMERGENCY GENERATOR (EG)	03102		X1-	5		CT0103	XA1	03104
BUBBLER 1/2/3 ALARM	03814		XS11	6		CT0103	AP387C	03812
BUBBLER 1/2/3 ALARM	03815		XS10	7		CT0103	AP387C	03813
BUBBLER 1 LEVEL	03825		XS10	8		CT0103	AP387C	03824
BUBBLER 1 LEVEL	03827		XS10	9		CT0103	AP387C	03826
BUBBLER 2 LEVEL	03829		XS11	10		CT0103	AP387C	03828
BUBBLER 2 LEVEL	03831		XS11	11		CT0103	AP387C	03830
				12		CT0103	AP367C	03616
				13		CT0103	AP367C	03617
SCRUBBER TROUBLE				14		CT0103	AP387C	03818
SCRUBBER TROUBLE				15		CT0103	AP387C	03819
	04101		XS10	16		CT0103		
	04102		XS11	17		CT0103		
SPARE				18		CT0103		
SPARE				19		CT0103		
SPARE				20		CT0103		
				TERMINAL CLAMP				

TITLE SOCKET XA

SUBTITLE

CUSTOMER LPE Epitaxial Technology

PROJECT SCHEMATIC WIRING MACHINE 400Vac 3PH+N 230Vac 1PH+N F=50Hz

DIS.:

RH4847E4

FROM

TO

VALIDITY

SHEET 051

NEXT 052

IEC SYMBOLS

CONFIDENTIAL

This document and data disclosed herein is not to be reproduced
used or disclosed in whole or in part to anyone without the permission of LPE Epitaxial Technology

THIS PAGE HAS BEEN
INTENTIONALLY LEFT BLANK

				DATE	
				REV.	Crivelli
8	MDT 1883	23/02/2015	Crivelli	CHECKED	Specker
REV	MODIFY	DATE	SIGNAT.	APPROVED	Crippa

TITLE SPARE PAGE

SUBTITLE

CUSTOMER LPE Epitaxial Technology

PROJECT SCHEMATIC WIRING MACHINE
400Vac 3PH+N 230Vac 1PH+N F=50Hz

DIS.: RH4847E4

VALIDITY
FROM TO

SHEET 052
NEXT 053

CONFIDENTIAL This document and data disclosed herein is not to be reproduced used or disclosed in whole or in part to anyone without the permission of LPE Epitaxial Technology

	WIRE TO	COMPONENT TO	TERMINAL NUMBER	XA3	INTERNAL CODE	COMPONENT FROM	WIRE FROM
				+F			
			TERMINAL CLAMP				
POTENTIOMETER A SIDE	01907		1		CT0052	RP0314I	03107
POTENTIOMETER A SIDE	01906		2		CT0052	RP0314I	03108
POTENTIOMETER A SIDE	01905		3		CT0052	RP0314I	03109
LIFT A UP (KUA)	03116	MD0317H	4		CT0052	XA1	03114
LIFT A DOWN (KDA)	03117	MD0317H	5		CT0052	XA1	03115
			TERMINAL CLAMP				
				+F			
				XA4			
			TERMINAL CLAMP				
POTENTIOMETER B SIDE	01910		1		CT0052	RP0319I	03118
POTENTIOMETER B SIDE	01909		2		CT0052	RP0319I	03119
POTENTIOMETER B SIDE	01908		3		CT0052	RP0319I	03120
LIFT B UP (KUB)	03125	MD03111H	4		CT0052	XA1	03123
LIFT B DOWN (KDB)	03126	MD03111H	5		CT0052	XA1	03124
			TERMINAL CLAMP				
				+T			
				XA5			
			TERMINAL CLAMP				
PRESSURE SWITCH	04310	BP04311D	1		CT0052	KT439G	04304
THERMAL SWITCH A/B	04307	BT04310D	2		CT0052	XA5	04304
EV VALVE	04302	XA5	3		CT0052	YV437G	04312
TIMER	04302	XA5	4		CT0052	KT439G	04313
PRESSURE SWITCH	04306	KT439G	5		CT0052	BP04311D	04311
THERMAL SWITCH A/B	04306	XA5	6		CT0052	BT04310E	04309
			TERMINAL CLAMP				
				+Z			
				XA6			
DIG.INPUT "B" POWER SUPPLY(A-43) - +24V	02208	XA1	1		CT0006		
POWER SUPPLY +24V	03232	AP387C	2		CT0006		
	03222	XS4	3		CT0006		
LIMIT SW A (SPOILER TO A)	03214	C37-13	4		CT0006		
SPARE			5		CT0006		
SPARE			6		CT0006		
DIG.INPUT "B" POWER SUPPLY (A-43) - GND	03221	XA1	7		CT0009		
POWER SUPPLY GND	03220	AP387C	8		CT0009		
	03219	XS4	9		CT0009		
LIMIT SWITCH LIFT B UP	03218	AP0404D.4	10		CT0009		
LIMIT SWITCH CLAMP B OPEN (INT)	03217	C37-14	11		CT0009		
LIMIT SWITCH CLAMP B OPEN (EST)	03229	BQ03211D	12		CT0009		
CONNECTOR J1	03230	BQ03212D	13		CT0009		
LIMIT SWITCH (SPOILER)	03231	BQ03214D	14		CT0009		
SPARE			15		CT0009		
SPARE			16		CT0009		

REV	MODIFY	DATE	SIGNAT.	APPROVED
4	MDT 606	24/07/2008	Proserpio	
5	MDT	08/04/2011	Senno	
8	MDT 1883	23/02/2015	Crivelli	

DATE	REV.	CHECKED	Specker
	Crivelli		

TITLE SUBTITLE: SOCKET XA3 XA4

CUSTOMER: LPE Epitaxial Technology

PROJECT: SCHEMATIC WIRING MACHINE 400Vac 3PH+N 230Vac 1PH+N F=50Hz

DIS.:

RH4847E4

FROM: VALIDITY TO

SHEET 053

NEXT 054

CONFIDENTIAL This document and data disclosed herein is not to be reproduced used or disclosed in whole or in part to anyone without the permission of LPE Epitaxial Technology

REV	8	5	4
MODIFY	MDT 1883	MDT	MDT 606
DATE	23/02/2015	08/04/2011	24/07/2008
SIGNAT.	Crivelli	Semo	Proserpio
APPROVED	CHECKED	REV.	DATE
Crippa	Spekker	Crivelli	

+Z

	WIRE TO	COMPONENT TO	TERMINAL NUMBER	XA7	INTERNAL CODE	COMPONENT FROM	WIRE FROM
DIG.INPUT "A" POWER SUPPLY(A-71) - +24V	02207	XA1	1		CT0006		
POWER SUPPLY +24V	03314	AP397C	2		CT0006		
			3		CT0006	XS7	03313
SPARE			4		CT0006		
SPARE			5		CT0006		
SPARE			6		CT0006		
DIG.INPUT "A" POWER SUPPLY (A-71) - GND	02204	XA1	7		CT0009		
POWER SUPPLY GND	03312	AP397C	8		CT0009		
			9		CT0009	XS7	03311
LIMIT SWITCH LIFT A UP	03310	AP0404I.4	10		CT0009		
LIMIT SWITCH CLAMP A OPEN (INT)	03303	BQ0333D	11		CT0009		
LIMIT SWITCH CLAMP A OPEN (EST)	03306	BQ0335D	12		CT0009		
CONNECTOR J1	03309	BQ0337D	13		CT0009		
SPARE			14		CT0009		
SPARE			15		CT0009		
SPARE			16		CT0009		

+Z

	WIRE TO	COMPONENT TO	TERMINAL NUMBER	XT1	INTERNAL CODE	COMPONENT FROM	WIRE FROM
			TERMINAL CLAMP				
LAMINAR FLOW (Q-52) - L1	L1/027	QM1212D	1			U0129H	L/002
LAMINAR FLOW (Q-52) - N	N/027	QM1212D	2			U0129H	NP/006
VACUUM TEST PUMP (S-VP) - L1	L1/028	QM1214D	3			SQ1214M	L/003
VACUUM TEST PUMP (S-VP) - N	N/028	QM1214D	4			M01214J	NP/009
FAN (A-82) - LP	LP/047	QU146C	5			EV0146I	L/006
FAN (A-82) - NP	NP/047	QU146C	6			EV0146I	NP/011
FANS COOLING UNITS (A-84) - LP	LP/048	QU148C	7			EV0148I	L/007
FANS COOLING UNITS (A-84) - NP	NP/048	QU148C	8			EV0148I	NP/012
POWER SUPPLY RACK VME (X-1) - LP	LP/049	QU1410C	9			UV01410I	L/008
POWER SUPPLY RACK VME (X-1) - NP	NP/049	QU1410C	10			UV01410I	NP/013
DC POWER SUPPLIES - LP	LP/046	QU1410C	11			XP0223D	L/009
DC POWER SUPPLIES - NP	NP/046	QU1410C	12			XP0223D	NP/014
			TERMINAL CLAMP				

TITLE SOCKET XA7 XT1

SUBTITLE

CUSTOMER LPE Epitaxial Technology

PROJECT SCHEMATIC WIRING MACHINE

400Vac 3PH+N 230Vac 1PH+N F=50Hz

DIS.: RH4847E4

FROM

TO

VALIDITY

SHEET 054

NEXT 055

CONFIDENTIAL This document and data disclosed herein is not to be reproduced used or disclosed in whole or in part to anyone without the permission of LPE Epitaxial Technology

IEC SYMBOLS

REV	8	5	4
MODIFY	MDT 1883	MDT	MDT 606
DATE	23/02/2015	08/04/2011	24/07/2008
SIGNAT.	Crivelli	Semo	Proserpio
APPROVED	CHECKED	REV.	DATE
Crippa	Specker	Crivelli	

+Z

	WIRE TO	COMPONENT TO	TERMINAL NUMBER	XA1	INTERNAL CODE	COMPONENT FROM	WIRE FROM
POWER SUPPLY THERMAL (Y-11)	01514	C37-19	61		CT0052	TM01510A	01511
			TERMINAL CLAMP				
AUX CONTACT NO MAIN BLOWER (Q-1) - 14	01201	QM126D	1		CT0052	AP367C	01203
AUX CONTACT NO MAIN BLOWER (Q-1) - 13	01202	QM126D	2		CT0052	AP367C	01204
POWER ON KEY (X-15)	01301	KM01312I	3		CT0052	SQ1312B	01305
POWER ON KEY (X-15)	01304	SQ1312B	4	●	CT0052	KM01312I	01303
EMERGENCY PUSH BUTTON RACK SIDE (A-90)	01303	XA1	5	●	CT0052	SE01312D	01306
EMERGENCY PUSH BUTTON RACK SIDE (A-90)	01307	SE01312D	6	●	CT0052	XA1	
EMERGENCY PUSH BUTTON FRONT SIDE (A-31)		XA1	7	●	CT0052	XP0	01309
EMERGENCY PUSH BUTTON FRONT SIDE (A-31)	01310	XP0	8		CT0052	KA0303H	01312
POWER SUPPLY PHOTOC. SHIELD (A-69)(A-8)	01503	T0152D	9	●	CT0052	TM01510A	01506
POWER SUPPLY SPARE	01506	XA1	10	●	CT0052	BF158H	01507
POWER SUPPLY THERMAL (Y-11)	01501	BF1510H	11	●	CT0052	XA1	01506
POWER SUPPLY PHOTOC. SHIELD (A-69)(A-8)	01504	T0152D	12	●	CT0052	TM01510A	01505
POWER SUPPLY SPARE	01505	XA1	13	●	CT0052	BF158H	01508
POWER SUPPLY THERMAL (Y-11)	01502	BF1510H	14	●	CT0052	XA1	01505
LAMP POWER SUPPLY (A-64) - GND	02202	KA0303H	15	●	CT0052	RP2210H	02201
PRESSURE TRANSD.POWER SUPPLY (A-33)-GND			16	●	CT0052	XA1	02202
DIG.INPUT "A" POWER SUPPLY (A-71) - GND	02204	XA7	17	●	CT0052	XA1	02202
DIG.INPUT "B" POWER SUPPLY (A-43) - GND	03221	XA6	18	●	CT0052	XA1	02202
DIG.INPUT "A/B" POWER SUPPLY (A-71)-GND	02206	AP367C	19	●	CT0052	XA1	02202
POWER SUPPLY ROR.PHOTOC.(F14-X-11)-GND	02221	XP14	20	●	CT0052	XA1	02202
FROM +24V POWER SUPPLY (Y-6) - GND	02004	XP0223D	21	●	CT0052	XA1	02202
DIG.INPUT "A/B" POWER SUPPLY(A-23)-+24V	02209	AP367C	22	●	CT0052	XA1	
FROM +24V POWER SUPPLY (Y-6 10-) - +24V	02001	XP0202F	23	●	CT0052	XA1	
POWER SUPPLY ROT.PHOTOC.(F14-X-11)-+24V	02210	XP14	24	●	CT0052	XA1	
LAMP POWER SUPPLY (A-64) - +24V		XA1	25	●	CT0052	RP2210H	02211
PRESSURE TRANSD. POWER SUPPLY(A-33)-GND			26	●	CT0052	XA1	
DIG.INPUT "A" POWER SUPPLY(A-71) - +24V	02207	XA7	27	●	CT0052	XA1	
DIG.INPUT "B" POWER SUPPLY(A-43) - +24V	02208	XA6	28	●	CT0052	XA1	
(RS) - FROM (Y-5) 19c	03001	KA0303H	29		CT0052	XP0208F	02015
(EG) - FROM (Y-5) 9c	03002	KA0304H	30		CT0052	XP0208F	02012
(KUA) - FROM (Y-5) 30c	03003	KA0306H	31		CT0052	XP0208F	02023
(KDA) FROM (Y-5) 20c	03004	KA0307H	32		CT0052	XP0208F	02016
(KUB) FROM (Y-5) 23c	03005	KA0308H	33		CT0052	XP0208F	02017
(KDB) - FROM (Y-5) 13c	03006	KA0309H	34		CT0052	XP0208F	02014
(RUP) - FROM (Y-5) 10c	02013	XP0208F	35		CT0052	C37-1	03007
LIMIT SWITCH SHIELD - HIGH (M-12)	03009	C37-2	36		CT0052	KA03011H	03011
(RDN) - FROM (Y-5) 3c	03014	C37-3	37		CT0052	XP0208F	02010
PHOTOC. SHIELD (RECEIVER) (A-8)	03012	C37-4	38		CT0052	BF1510H	03016
PHOTOC. SHIELD (RECEIVER) (A-8)	03017	BF1510H	39		CT0052	KA03013H	03018
18Vdc POWER SUPPLY (+)	03110	V313B	40		CT0052	XP02710E	02701
18Vdc POWER SUPPLY (-)	03111	V313B	41		CT0052	XP02710E	02702
EMERGENCY GENERATOR (EG)	03105	KA0304H	42		CT0052	XA	03103
EMERGENCY GENERATOR (EG)	03106	KA0304H	43		CT0052	XA	03104
LIFT A UP (KUA)	03114	XA3	44		CT0052	KA0306H	03112
LIFT A DOWN (KDA)	03115	XA3	45		CT0052	KA0307H	03113
LIFT B UP (KUB)	03123	XA4	46		CT0052	KA0308H	03121
LIFT B DOWN (KDB)	03124	XA4	47		CT0052	KA0309H	03122
SHIELD MOTOR UP (RUP)	03128	C37-5	48		CT0052	KA03011H	03127
SHIELD MOTOR DOWN (RDN)	03131	C37-6	49		CT0052	KA03013H	03130
SPARE			50		CT0052		
SPARE			51		CT0052		
SPARE			52		CT0052		
SPARE			53		CT0052		
SPARE			54		CT0052		
SPARE			55		CT0052		
SPARE			56		CT0052		
SPARE			57		CT0052		
SPARE			58		CT0052		
POWER SUPPLY THERMAL (Y-11)	01528	C37-21	59		CT0052	TM01510A	01509
POWER SUPPLY THERMAL (Y-11)	01526	C37-20	60		CT0052	TM01510A	01510
POWER SUPPLY THERMAL (Y-11)	01522	C37-18	62		CT0052	TM01510A	01512
POWER SUPPLY THERMAL (Y-11)	01520	C37-17	63		CT0052	TM01510A	01513
POWER SUPPLY THERMAL (Y-11)	01518	C37-16	64		CT0052	XA1	01506
POWER SUPPLY THERMAL (Y-11)	01516	C37-15	65		CT0052	XA1	01505
			TERMINAL CLAMP				

CUSTOMER LPE Epitaxial Technology

TITLE
SUBTITLE

PROJECT SCHEMATIC WIRING MACHINE
400Vac 3PH+N 230Vac 1PH+N F=50Hz

DIS.:

RH4847E4

FROM
TO

VALIDITY

SHEET 055
NEXT 056

IEC SYMBOLS

CONFIDENTIAL
This document and data disclosed herein is not to be reproduced
used or disclosed in whole or in part to anyone without the permission of LPE Epitaxial Technology

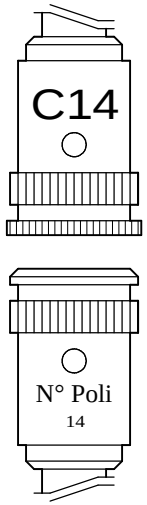

CT0026 1Pz
CT0005 1Pz
CT0033 1Pz

N° Pin	Loc.orig.	Origine	N° Filo	Pag./Col.	Destinazione	Loc. dest.

16-PIN CONNECTOR MALE/FEMALE
FOR CONNECTION GENERATOR TO MACHINE

	FEMALE				MALE	
1	C37-34	01308	RD	013/	01322	GEN-X1/1
2	C37-35	01311	GN	013/	01323	GEN-X1/2
3	C37-36	03133	BK	031/	03135	GEN-X1/3
4	C37-37	03134	WH	031/	03136	GEN-X1/4
5	SPARE					
6	SPARE					
7	SPARE					
8	SPARE					
9	SPARE					
10	SPARE					
11	SPARE					
12	SPARE					
13	SPARE					
14	SPARE					

				DATE	
				REV.	Crivelli
8	MDT 1883	23/02/2015	Crivelli	CHECKED	Specker
REV	MODIFY	DATE	SIGNAT.	APPROVED	Crippa

TITLE 16 PIN CONNECTOR
SUBTITLE FOR GENERATOR TO MACHINE
CUSTOMER LPE Epitaxial Technology

PROJECT SCHEMATIC WIRING MACHINE
400Vac 3PH+N 230Vac 1PH+N F=50Hz
DIS.: RH4847E4

VALIDITY
FROM TO
SHEET 056
NEXT 057

IEC SYMBOLS

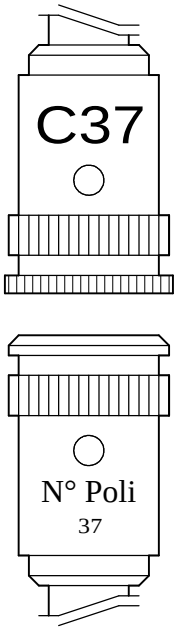

CT0027 1Pz
CT0028 1Pz
CT0032 2Pz

N° Pin	Loc.orig.	Origine	N° Filo	Pag./Col.	Destinazione	Loc. dest.

37-PIN CONNECTOR MALE/FEMALE FOR SEPARATION UPPER STATION

	FEMALE				MALE	
1	XA1-38	03007		030/	03008	SQ3013E
2	XA1-39	03010		030/	03009	SQ3013E
3	XA1-40	03014		030/	03013	SQ3014G
4	XA1-41	03015		030/	03012	SQ3014G
5	XA1-53	03128		031/	03129	MD03114H
6	XA1-54	03131		031/	03132	MD03114H
7	AP387C	03201		032/	03206	SQ322F
8	AP387C	03201		032/	03207	SQ324D
9	AP387C	03820		032/	03203	SQ322D
10	AP387C	03821		032/	03202	SQ324H
11	AP387C	03822		032/	03213	BQ326D
12	AP387C	03823		032/	03212	BQ328D
13	XA6-4	03214		032/	03215	BQ326D
14	AP387C	03216		032/	03217	XA6-11
15	XA1-65	01516		015/	01517	YV1513H
16	XA1-64	01518		015/	01519	YV1513H
17	XA1-63	01520		015/	01521	YV1513H
18	XA1-62	01522		015/	01523	YV1513H
19	XA1-61	01514		015/	01515	B01512H
20	XA1-60	01526		015/	01527	B01512H
21	XA1-59	01528		015/	01529	B01512H
22	SPARE					
23	SPARE					
24	SPARE					
25	SPARE					
26	SPARE					
27	SPARE					
28	SPARE					
29	SPARE					
30	SPARE					
31	SPARE					
32	SPARE					
33	SPARE					
34	XA-1	01316		013/		C16-1
35	XA-2	01317		013/		C16-2
36	XA-3	03101		031/		C16-3
37	XA-4	03102		031/		C16-4

CONFIDENTIAL
This document and data disclosed herein is not to be reproduced used or disclosed in whole or in part to anyone without the permission of LPE Epitaxial Technology

REV	MODIFY	DATE	SIGNAT.	APPROVED	Crippa
4	MDT 606	24/07/2008	Proserpio	DATE	
5	MDT	08/04/2011	Senno	REV.	Crivelli
8	MDT 1883	23/02/2015	Crivelli	CHECKED	Specker

TITLE 37 PIN CONNECTOR FOR
SUBTITLE SEPARATION MACHINE
CUSTOMER LPE Epitaxial Technology

PROJECT SCHEMATIC WIRING MACHINE
400Vac 3PH+N 230Vac 1PH+N F=50Hz
DIS.: RH4847E4

VALIDITY
FROM TO
SHEET 057
NEXT 057

IEC SYMBOLS

CONFIDENTIAL This document and data disclosed herein is not to be reproduced used or disclosed in whole or in part to anyone without the permission of LPE Epitaxial Technology

TVM 231/FRONT

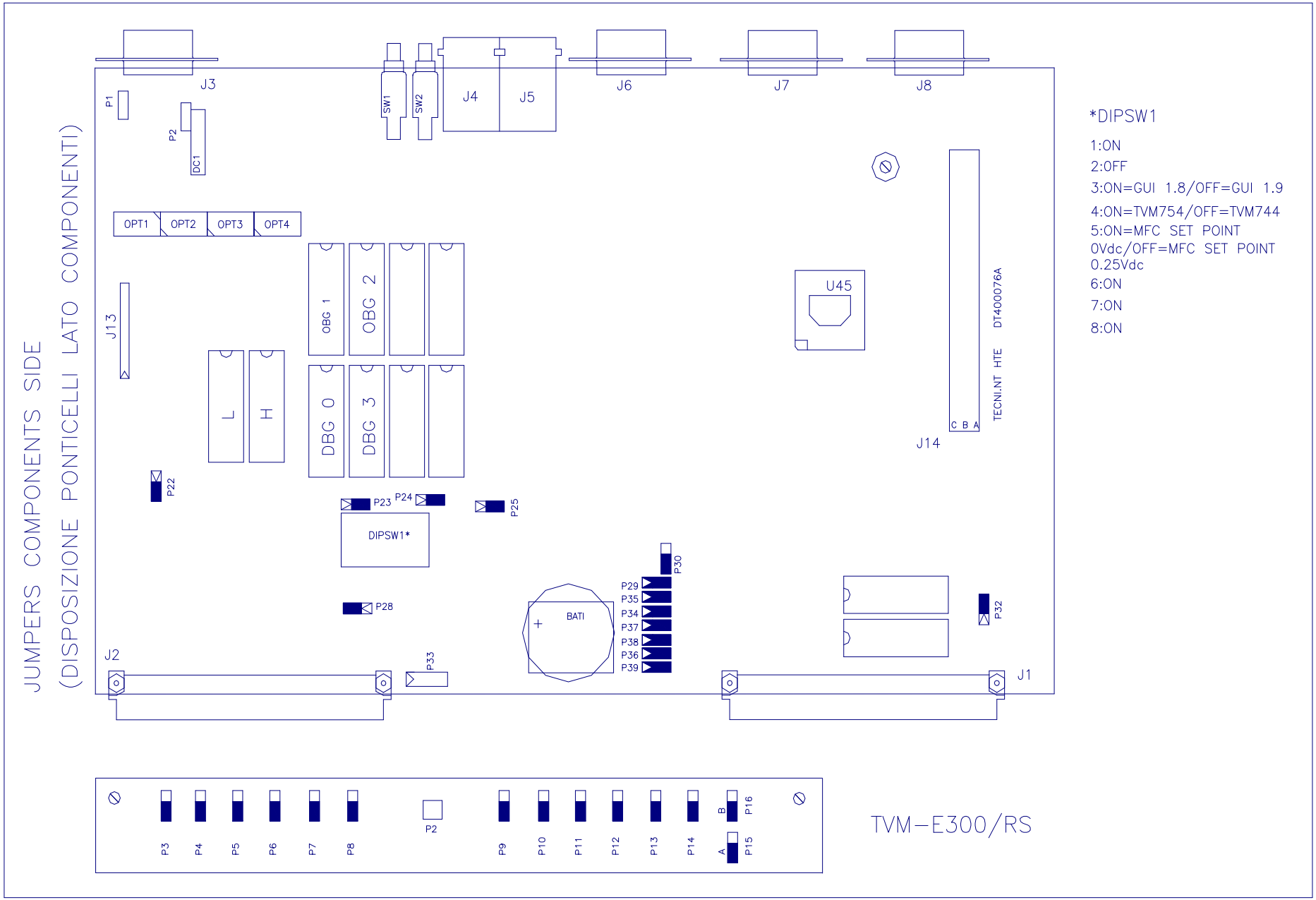

*DIPSW1

1:ON
2:OFF
3:ON=GUI 1.8/OFF=GUI 1.9
4:ON=TVM754/OFF=TVM744
5:ON=MFC SET POINT 0Vdc/OFF=MFC SET POINT 0.25Vdc
6:ON
7:ON
8:ON

1	GENERAL UPGRADE	13/07/2004	Adecco	DATE	30/01/2003
2	GENERAL UPGRADE	01/06/2005	Napoli	REV.	Proserpio
4	MDT 606	24/07/2008	Proserpio	CHECKED	Maccalli
REV	MODIFY	DATE	SIGNAT.	APPROVED	Crippa

LPE

TITLE BOARD TVM 231
SUBTITLE FRONT
CUSTOMER LPE Epitaxial Technology

PROJECT SCHEMATIC WIRING MACHINE
400Vac 3PH+N 230Vac 1PH+N F=50Hz

DIS.: Borgonovo

RH4847E4

VALIDITY
FROM TO

SHEET 061
NEXT 062

IEC SYMBOLS

CONFIDENTIAL This document and data disclosed herein is not to be reproduced used or disclosed in whole or in part to anyone without the permission of LPE Epitaxial Technology

TVM 231/BACK

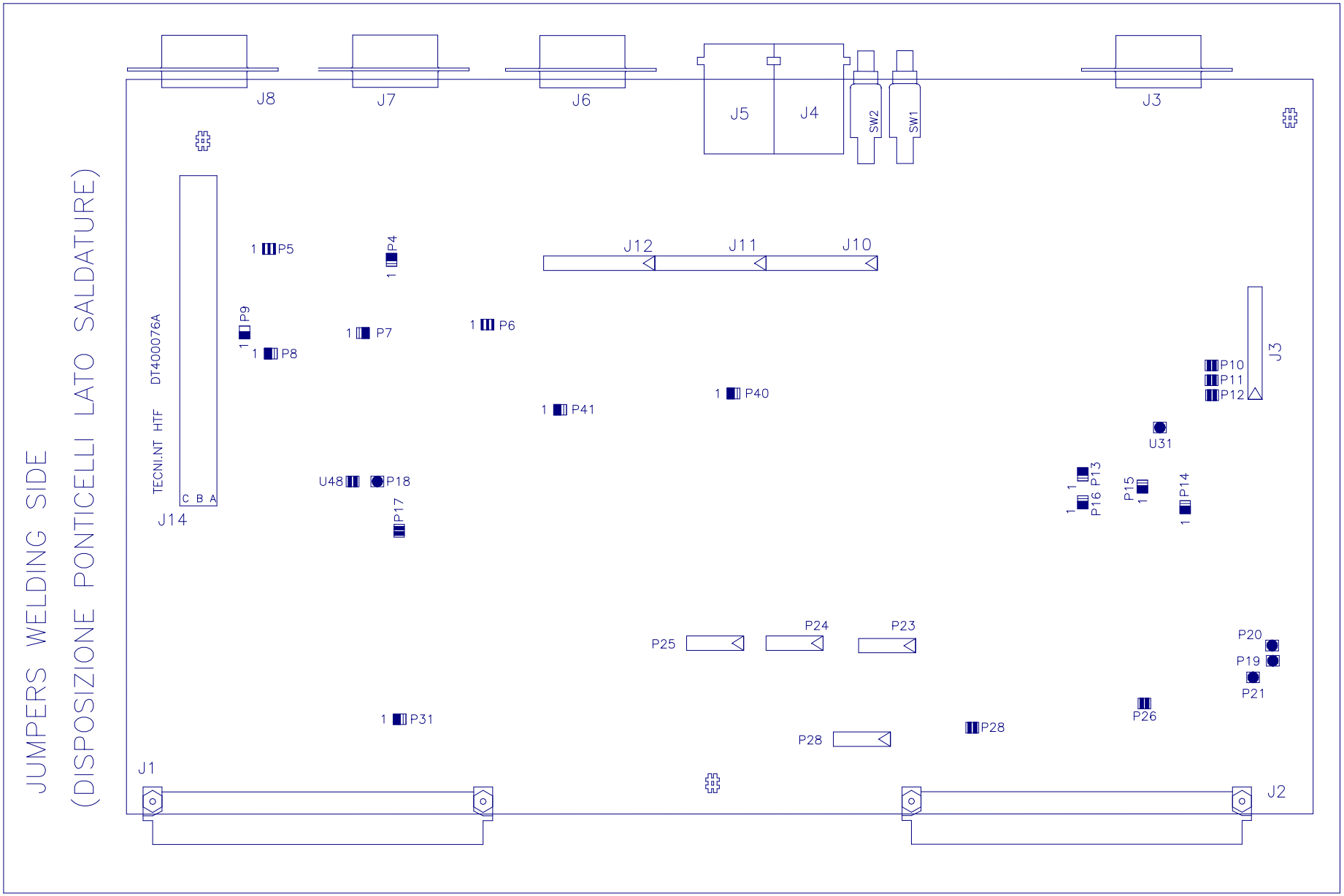

1	GENERAL UPGRADE	13/07/2004	Adecco	DATE	30/01/2003
2	GENERAL UPGRADE	01/06/2005	Napoli	REV.	Proserpio
4	MDT 606	24/07/2008	Proserpio	CHECKED	Maccalli
REV	MODIFY	DATE	SIGNAT.	APPROVED	Crippa

LPE

TITLE BOARD TVM 231
SUBTITLE BACK
CUSTOMER LPE Epitaxial Technology

PROJECT SCHEMATIC WIRING MACHINE
400Vac 3PH+N 230Vac 1PH+N F=50Hz

DIS.: Borgonovo

RH4847E4

VALIDITY
FROM TO

SHEET 062
NEXT 063

IEC SYMBOLS

CONFIDENTIAL This document and data disclosed herein is not to be reproduced used or disclosed in whole or in part to anyone without the permission of LPE Epitaxial Technology

TVM 754/A

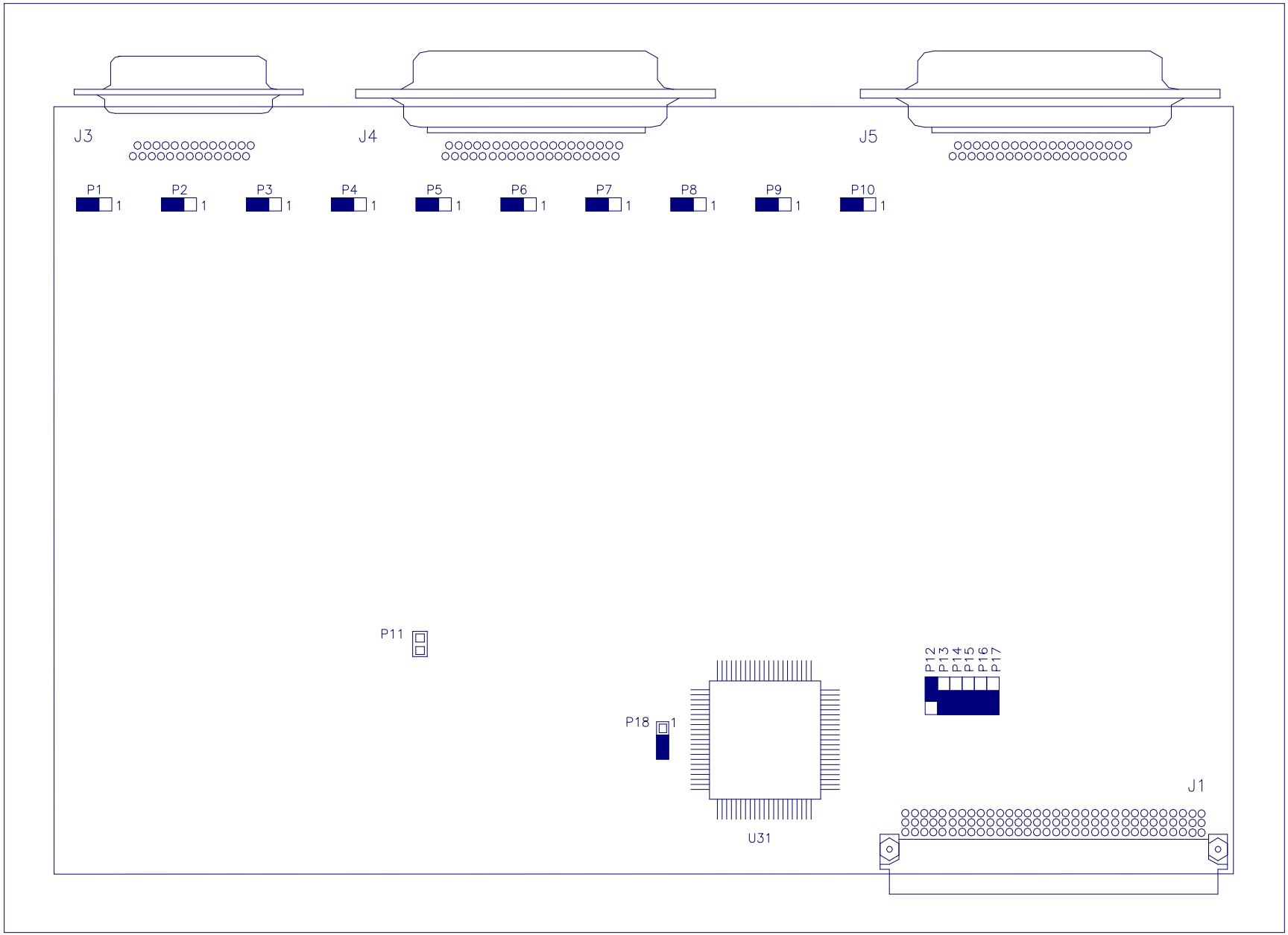

1	GENERAL UPGRADE	13/07/2004	Adecco	DATE	30/01/2003
2	GENERAL UPGRADE	01/06/2005	Napoli	REV.	Proserpio
4	MDT 606	24/07/2008	Proserpio	CHECKED	Maccalli
REV	MODIFY	DATE	SIGNAT.	APPROVED	Crippa

LPE

TITLE BOARD TVM 754/A
SUBTITLE FRONT
CUSTOMER LPE Epitaxial Technology

PROJECT SCHEMATIC WIRING MACHINE
400Vac 3PH+N 230Vac 1PH+N F=50Hz

VALIDITY FROM TO

DIS.: Borgonovo

RH4847E4

SHEET 063
NEXT 064

IEC SYMBOLS

CONFIDENTIAL This document and data disclosed herein is not to be reproduced used or disclosed in whole or in part to anyone without the permission of LPE Epitaxial Technology

TVM 754/B

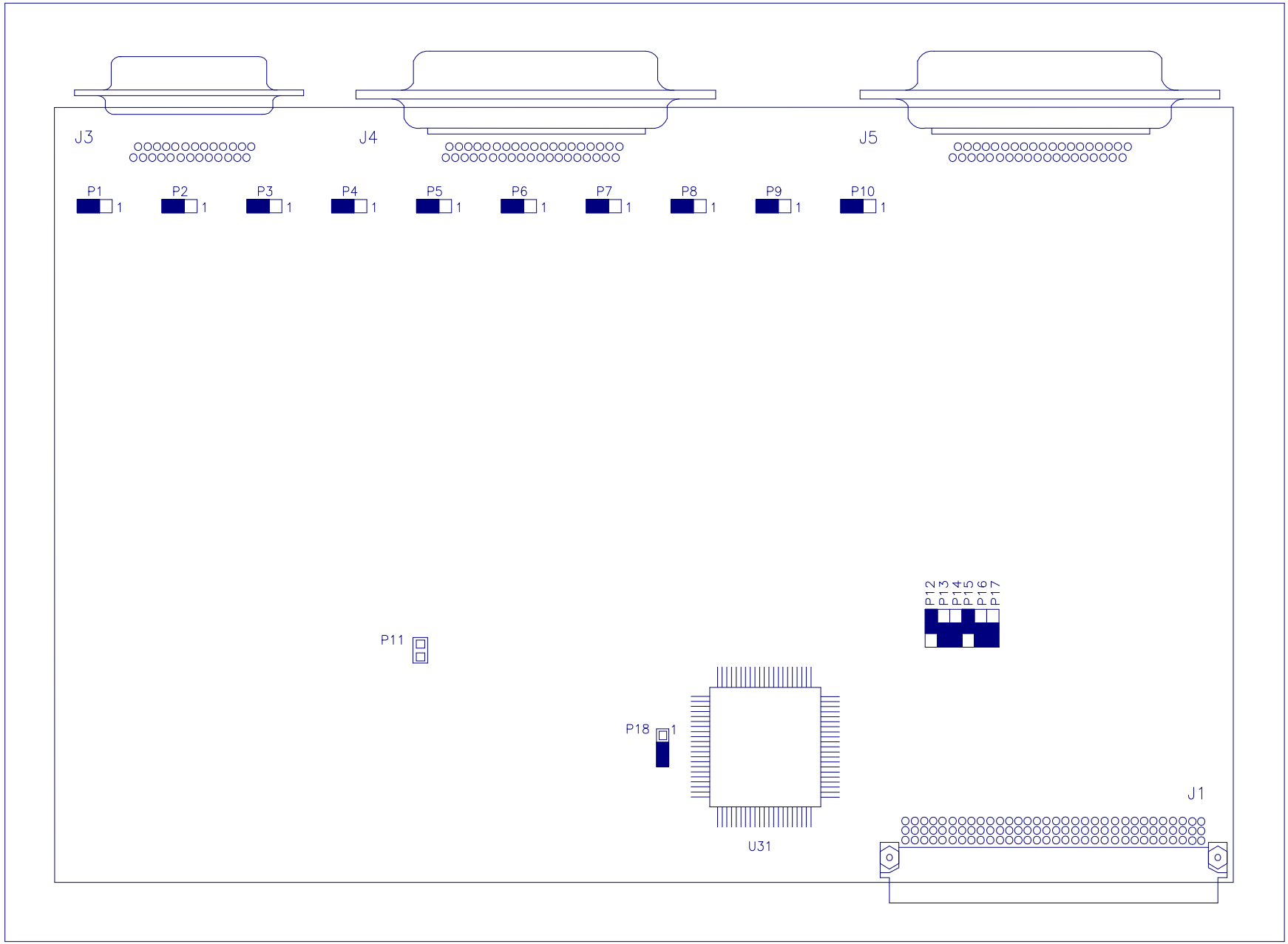

1	GENERAL UPGRADE	13/07/2004	Adecco	DATE	30/01/2003
2	GENERAL UPGRADE	01/06/2005	Napoli	REV.	Proserpio
4	MDT 606	24/07/2008	Proserpio	CHECKED	Maccalli
REV	MODIFY	DATE	SIGNAT.	APPROVED	Crippa

LPE

TITLE BOARD TVM 754/B
SUBTITLE FRONT
CUSTOMER LPE Epitaxial Technology

PROJECT SCHEMATIC WIRING MACHINE
400Vac 3PH+N 230Vac 1PH+N F=50Hz

VALIDITY
FROM TO

DIS.: Borgonovo

RH4847E4

SHEET 064
NEXT 065

IEC SYMBOLS

CONFIDENTIAL This document and data disclosed herein is not to be reproduced used or disclosed in whole or in part to anyone without the permission of LPE Epitaxial Technology

TVM 751/2 FRONT

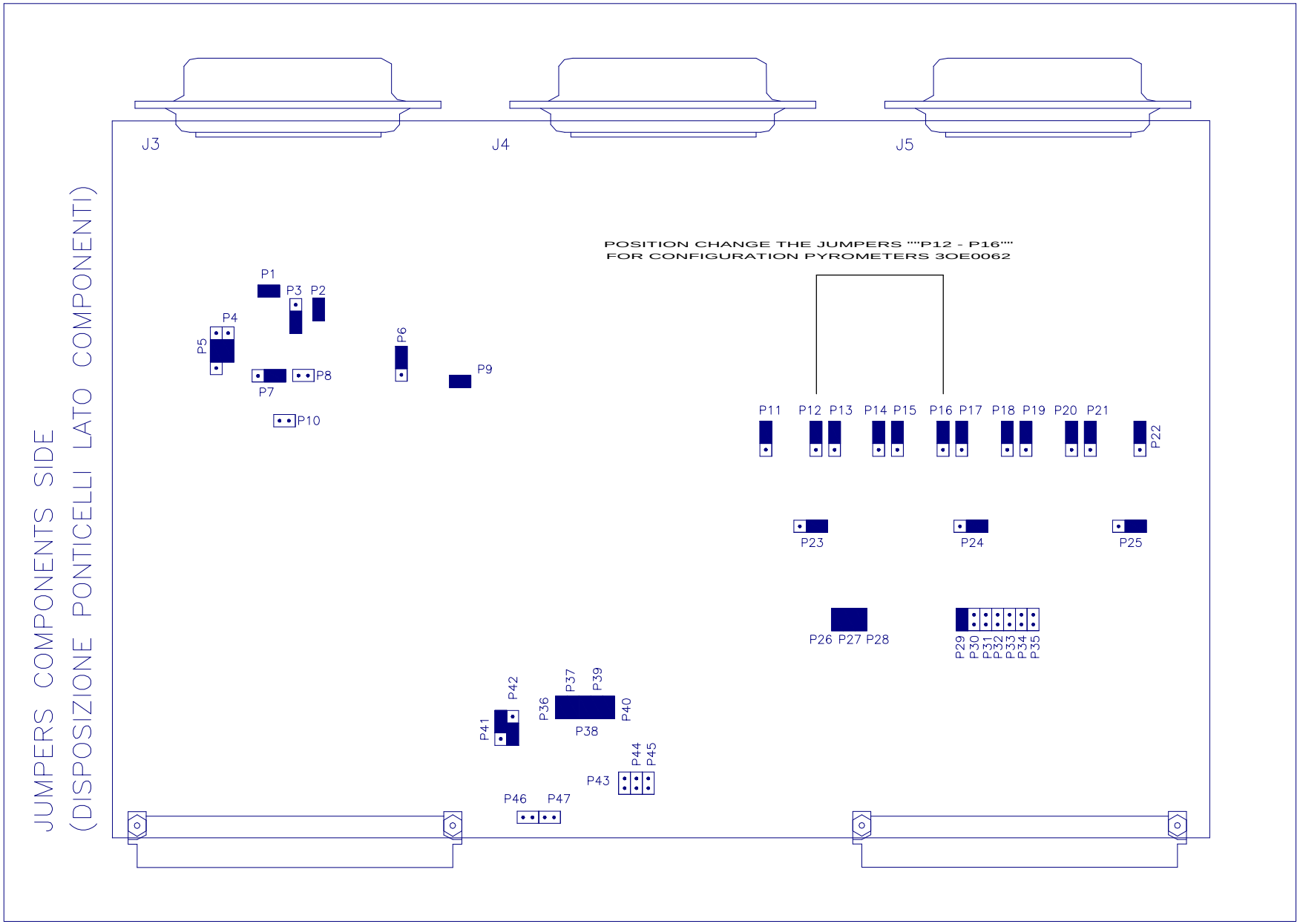

2	GENERAL UPGRADE	01/06/2005	Napoli	DATE	30/01/2003	LPE	TITLE	BOARD TVM 751/2	PROJECT	SCHEMATIC WIRING MACHINE 400Vac 3PH+N 230Vac 1PH+N F=50Hz	VALIDITY
4	MDT 606	24/07/2008	Proserpio	REV.	Crivelli		SUBTITLE	FRONT			FROM TO
8	MDT 1883	23/02/2015	Crivelli	CHECKED	Specker		CUSTOMER	LPE Epitaxial Technology	DIS.:	Borgonovo	RH4847E4
REV	MODIFY	DATE	SIGNAT.	APPROVED	Crippa						SHEET 065 NEXT 066

IEC SYMBOLS

CONFIDENTIAL This document and data disclosed herein is not to be reproduced used or disclosed in whole or in part to anyone without the permission of LPE Epitaxial Technology

TVM 751/3 FRONT

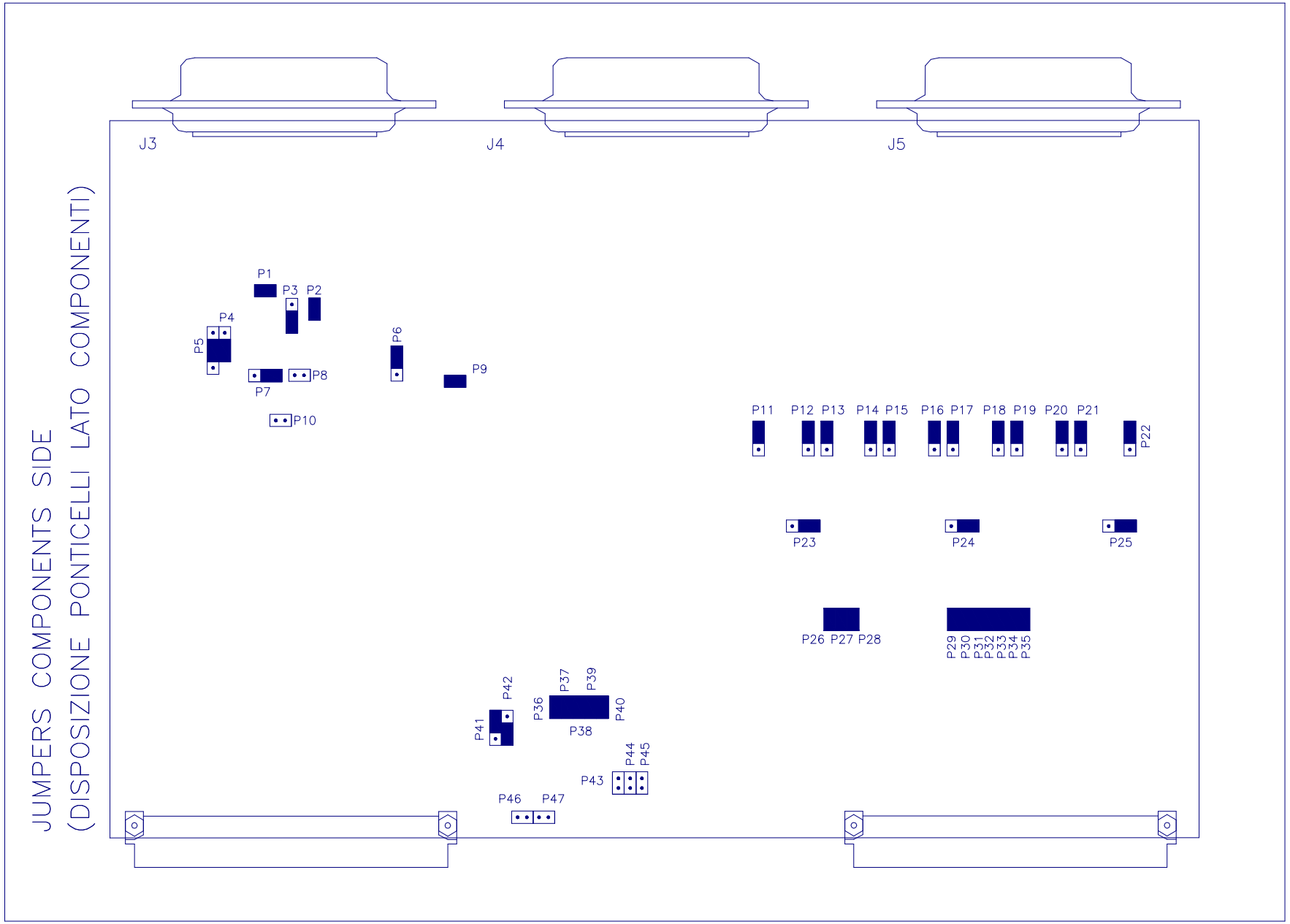

1	GENERAL UPGRADE	13/07/2004	Adecco	DATE	30/01/2003	LPE	TITLE	BOARD TVM 751/3	PROJECT	SCHEMATIC WIRING MACHINE 400Vac 3PH+N 230Vac 1PH+N F=50Hz	VALIDITY
2	GENERAL UPGRADE	01/06/2005	Napoli	REV.	Proserpio		SUBTITLE	FRONT			FROM TO
4	MDT 606	24/07/2008	Proserpio	CHECKED	Maccalli		CUSTOMER	LPE Epitaxial Technology	DIS.:	Borgonovo	RH4847E4
REV	MODIFY	DATE	SIGNAT.	APPROVED	Crippa						SHEET 066 NEXT 067

IEC SYMBOLS

CONFIDENTIAL This document and data disclosed herein is not to be reproduced used or disclosed in whole or in part to anyone without the permission of LPE Epitaxial Technology

TVM 751/1 FRONT

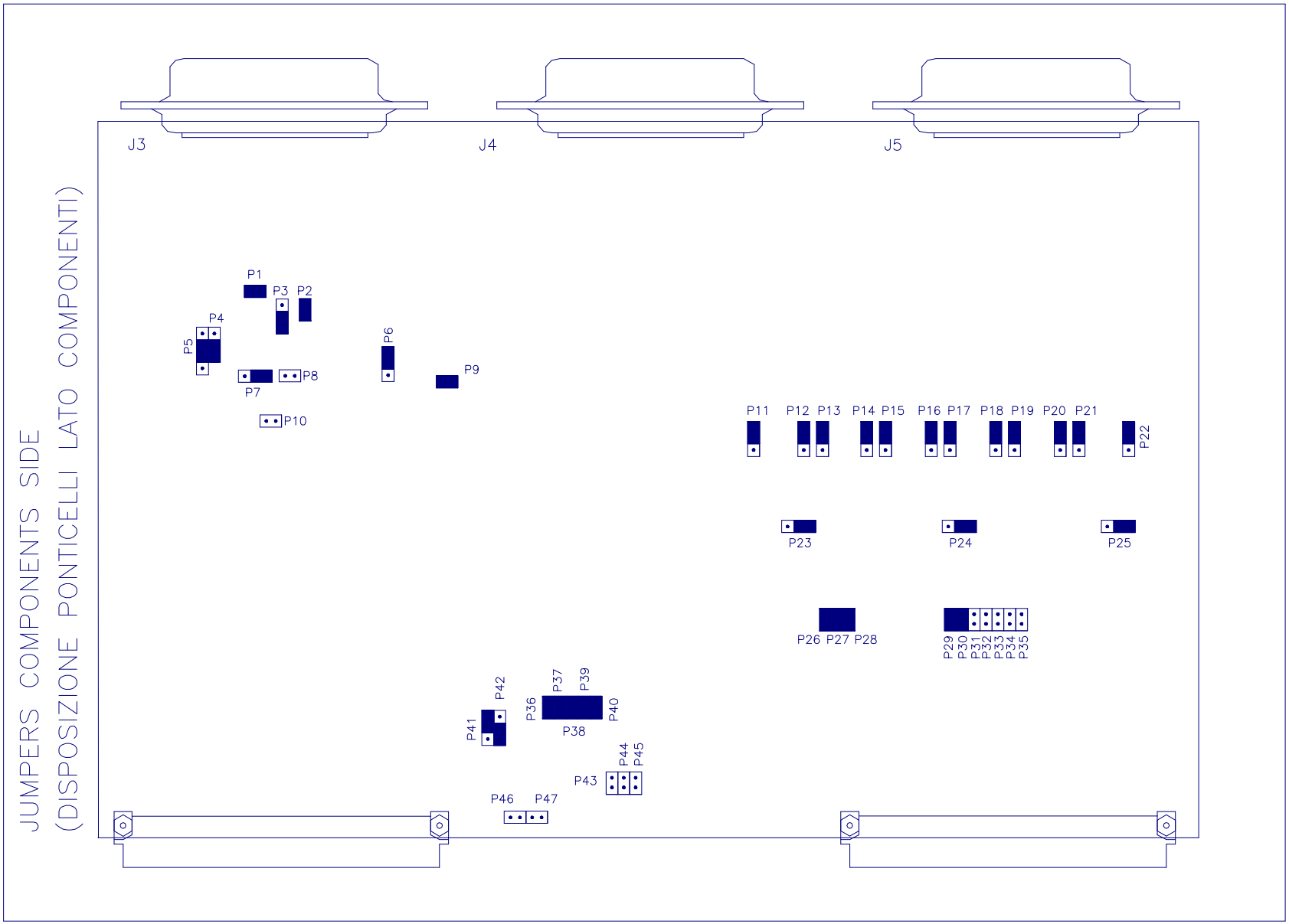

1	GENERAL UPGRADE	13/07/2004	Adecco	DATE	30/01/2003	TITLE	BOARD TVM 751/1	PROJECT	SCHEMATIC WIRING MACHINE 400Vac 3PH+N 230Vac 1PH+N F=50Hz	VALIDITY	
2	GENERAL UPGRADE	01/06/2005	Napoli	REV.	Proserpio	SUBTITLE	FRONT			FROM	TO
4	MDT 606	24/07/2008	Proserpio	CHECKED	Maccalli	CUSTOMER	LPE Epitaxial Technology	DIS.:	Borgonovo	RH4847E4	SHEET 067
REV	MODIFY	DATE	SIGNAT.	APPROVED	Crippa						NEXT 068

IEC SYMBOLS

CONFIDENTIAL This document and data disclosed herein is not to be reproduced used or disclosed in whole or in part to anyone without the permission of LPE Epitaxial Technology

TVM 751/4 FRONT

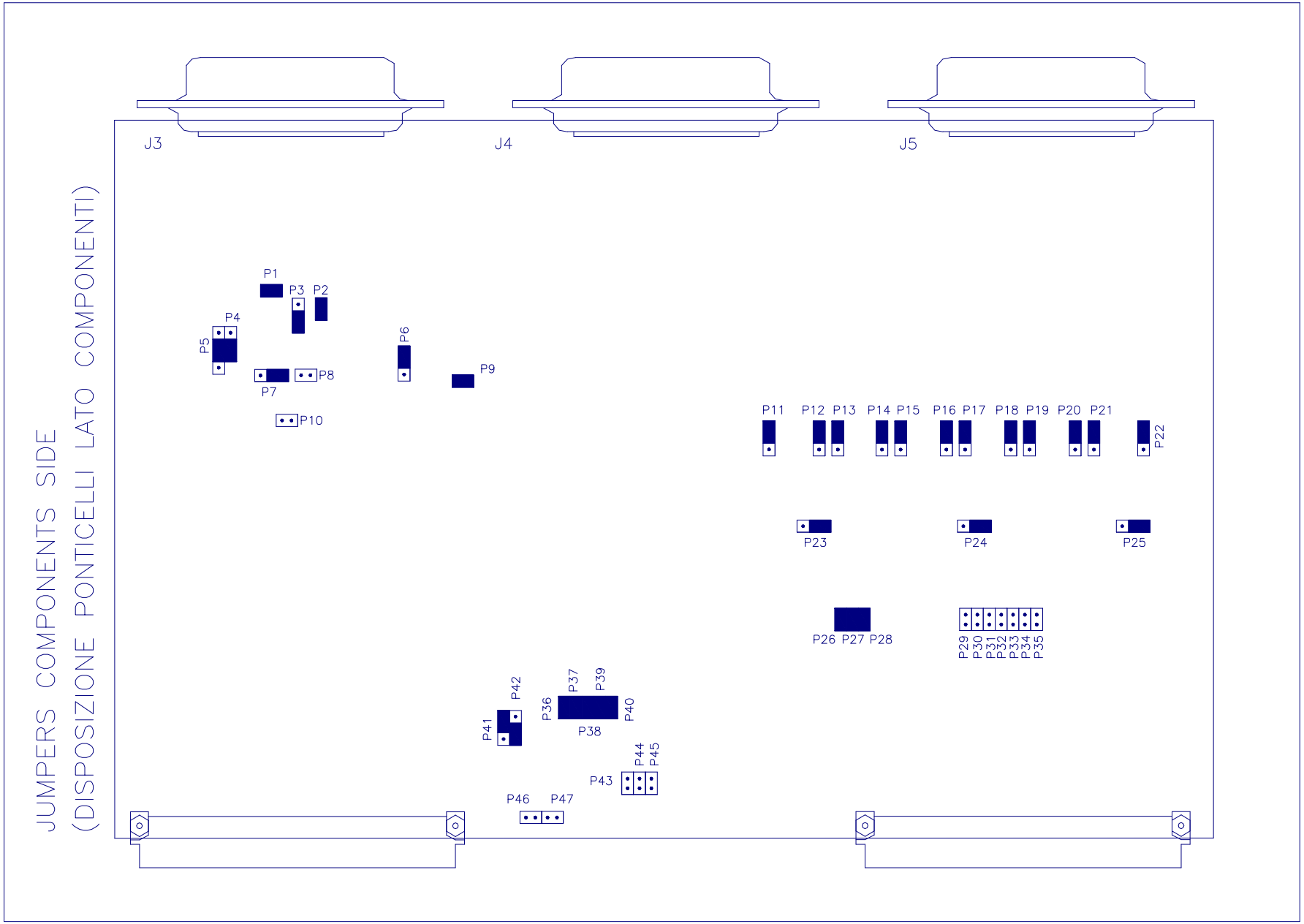

1	GENERAL UPGRADE	13/07/2004	Adecco	DATE	30/01/2003
2	GENERAL UPGRADE	01/06/2005	Napoli	REV.	Proserpio
4	MDT 606	24/07/2008	Proserpio	CHECKED	Maccalli
REV	MODIFY	DATE	SIGNAT.	APPROVED	Crippa

LPE

TITLE BOARD TVM 751/4
SUBTITLE FRONT
CUSTOMER LPE Epitaxial Technology

PROJECT SCHEMATIC WIRING MACHINE
400Vac 3PH+N 230Vac 1PH+N F=50Hz
DIS.: Borgonovo
RH4847E4

VALIDITY
FROM TO

SHEET 068
NEXT 069

IEC SYMBOLS

CONFIDENTIAL This document and data disclosed herein is not to be reproduced used or disclosed in whole or in part to anyone without the permission of LPE Epitaxial Technology

TVM 751/4/RP FRONT

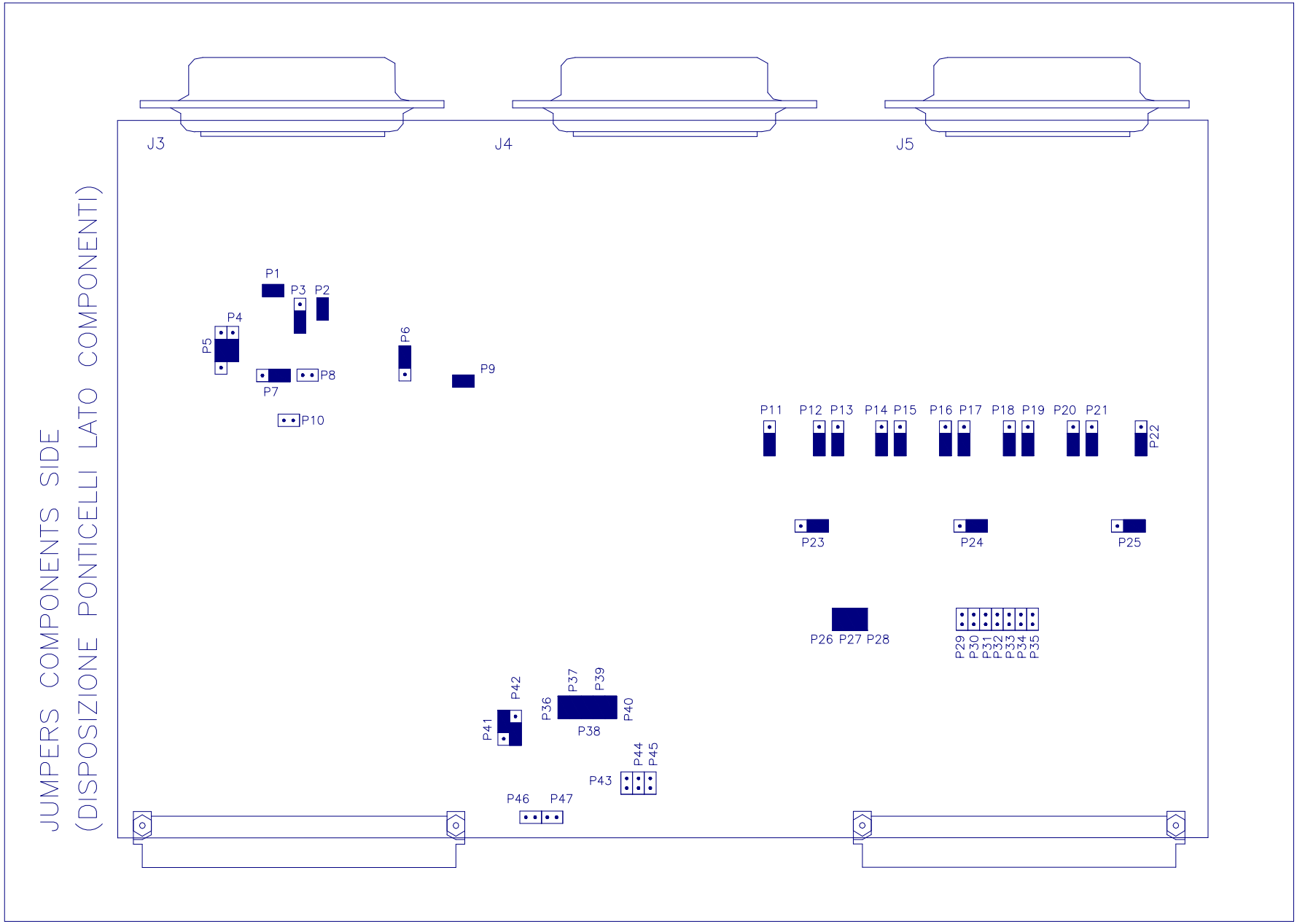

1	GENERAL UPGRADE	13/07/2004	Adecco	DATE	30/01/2003
2	GENERAL UPGRADE	01/06/2005	Napoli	REV.	Proserpio
4	MDT 606	24/07/2008	Proserpio	CHECKED	Maccalli
REV	MODIFY	DATE	SIGNAT.	APPROVED	Crippa

LPE

TITLE BOARD TVM 751/4_RP
SUBTITLE FRONT
CUSTOMER LPE Epitaxial Technology

PROJECT SCHEMATIC WIRING MACHINE
400Vac 3PH+N 230Vac 1PH+N F=50Hz
DIS.: Borgonovo
RH4847E4

VALIDITY
FROM TO

SHEET 069
NEXT 070

IEC SYMBOLS

CONFIDENTIAL This document and data disclosed herein is not to be reproduced used or disclosed in whole or in part to anyone without the permission of LPE Epitaxial Technology

TVM 751/1/2/3/4/4 RP BACK

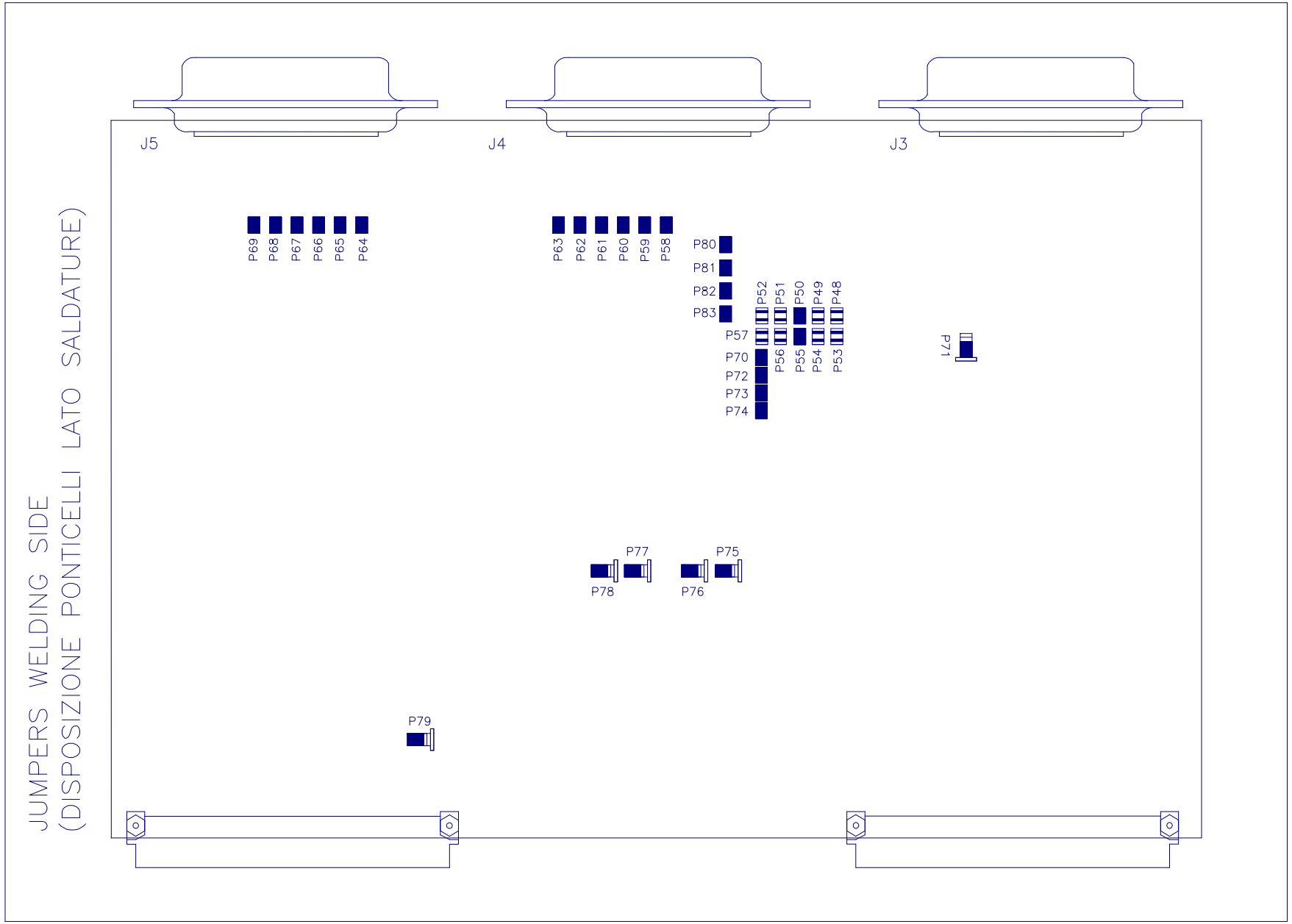

1	GENERAL UPGRADE	13/07/2004	Adecco	DATE	30/01/2003
2	GENERAL UPGRADE	01/06/2005	Napoli	REV.	Proserpio
4	MDT 606	24/07/2008	Proserpio	CHECKED	Maccalli
REV	MODIFY	DATE	SIGNAT.	APPROVED	Crippa

LPE

TITLE BOARD TVM 751/1/2/3/4/4_RP
SUBTITLE BACK
CUSTOMER LPE Epitaxial Technology

PROJECT SCHEMATIC WIRING MACHINE
400Vac 3PH+N 230Vac 1PH+N F=50Hz

VALIDITY
FROM TO

DIS.: Borgonovo

RH4847E4

SHEET 070
NEXT 071

IEC SYMBOLS

CONFIDENTIAL This document and data disclosed herein is not to be reproduced used or disclosed in whole or in part to anyone without the permission of LPE Epitaxial Technology

TVM 231/ROT FRONT

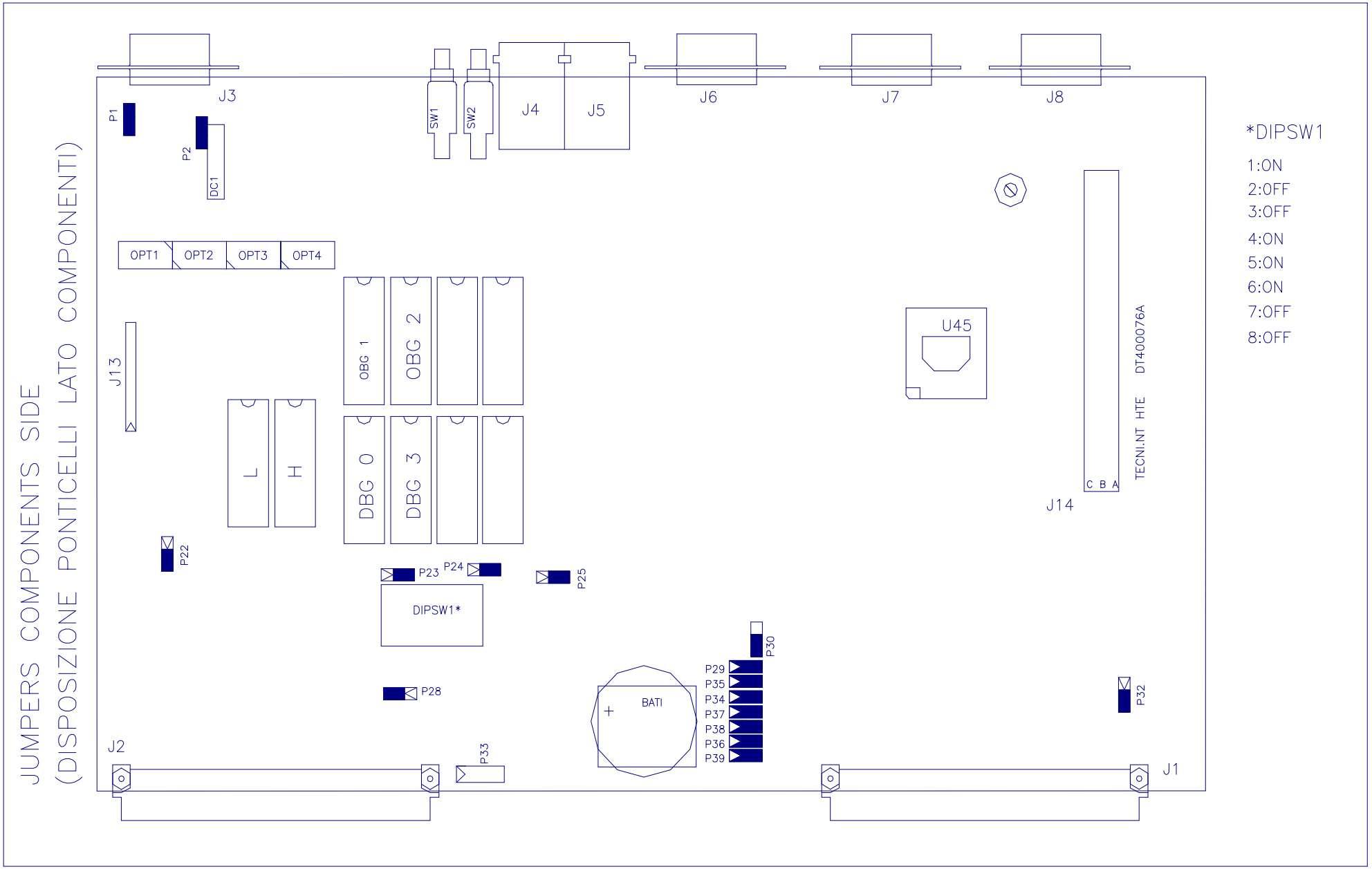

1	GENERAL UPGRADE	13/07/2004	Adecco	DATE	30/01/2003
2	GENERAL UPGRADE	01/06/2005	Napoli	REV.	Proserpio
4	MDT 606	24/07/2008	Proserpio	CHECKED	Maccalli
REV	MODIFY	DATE	SIGNAT.	APPROVED	Crippa

LPE

TITLE BOARD TVM 231/ROT
SUBTITLE FRONT
CUSTOMER LPE Epitaxial Technology

PROJECT SCHEMATIC WIRING MACHINE
400Vac 3PH+N 230Vac 1PH+N F=50Hz

DIS.: Borgonovo

RH4847E4

VALIDITY
FROM TO

SHEET 071
NEXT 072

IEC SYMBOLS

CONFIDENTIAL This document and data disclosed herein is not to be reproduced used or disclosed in whole or in part to anyone without the permission of LPE Epitaxial Technology

TVM 231/ROT BACK

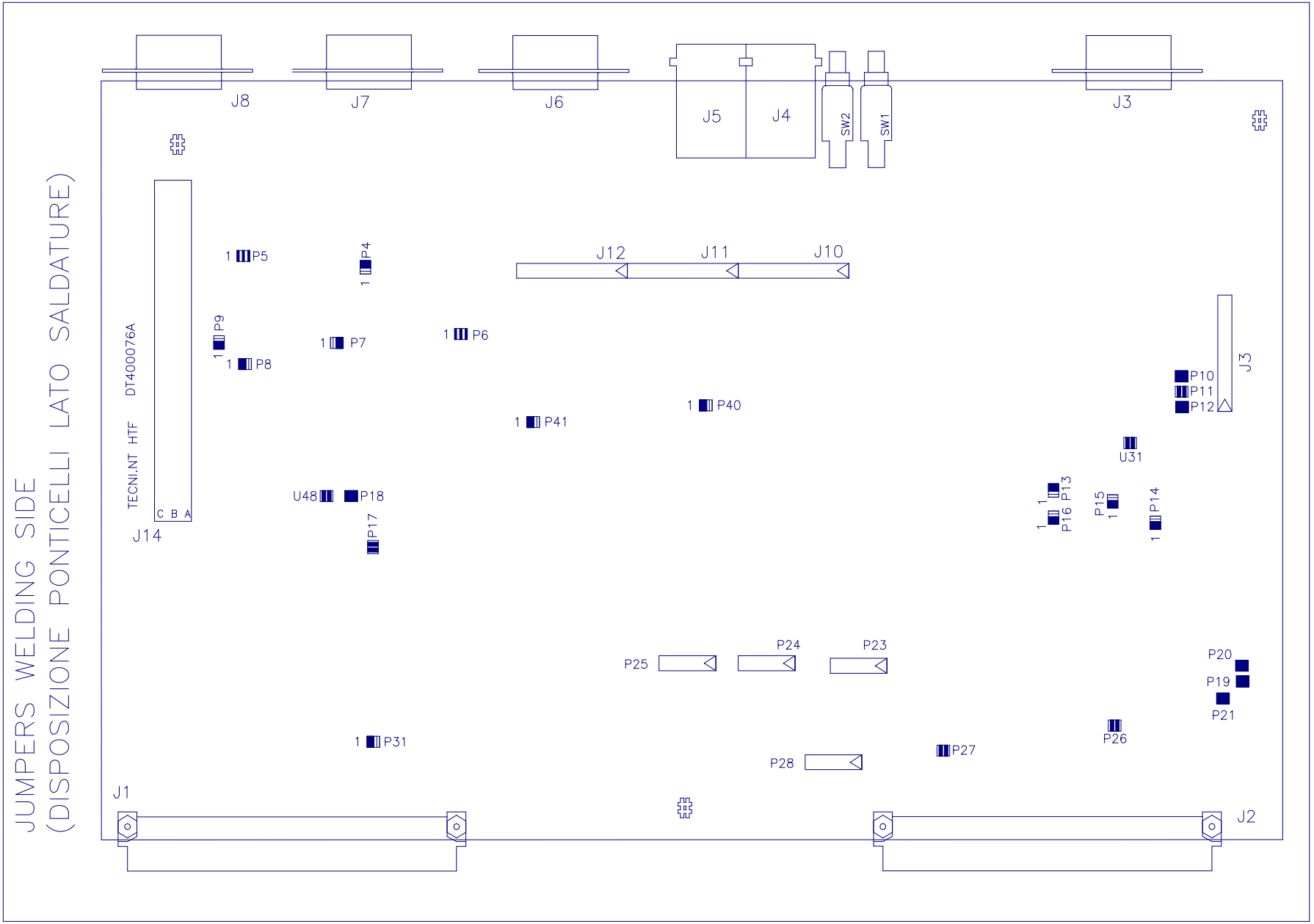

1	GENERAL UPGRADE	13/07/2004	Adecco	DATE	30/01/2003
2	GENERAL UPGRADE	01/06/2005	Napoli	REV.	Proserpio
4	MDT 606	24/07/2008	Proserpio	CHECKED	Maccalli
REV	MODIFY	DATE	SIGNAT.	APPROVED	Crippa

LPE

TITLE BOARD TVM 231/ROT
SUBTITLE BACK
CUSTOMER LPE Epitaxial Technology

PROJECT SCHEMATIC WIRING MACHINE
400Vac 3PH+N 230Vac 1PH+N F=50Hz
DIS.: Borgonovo
RH4847E4

VALIDITY
FROM TO
SHEET 072
NEXT 072

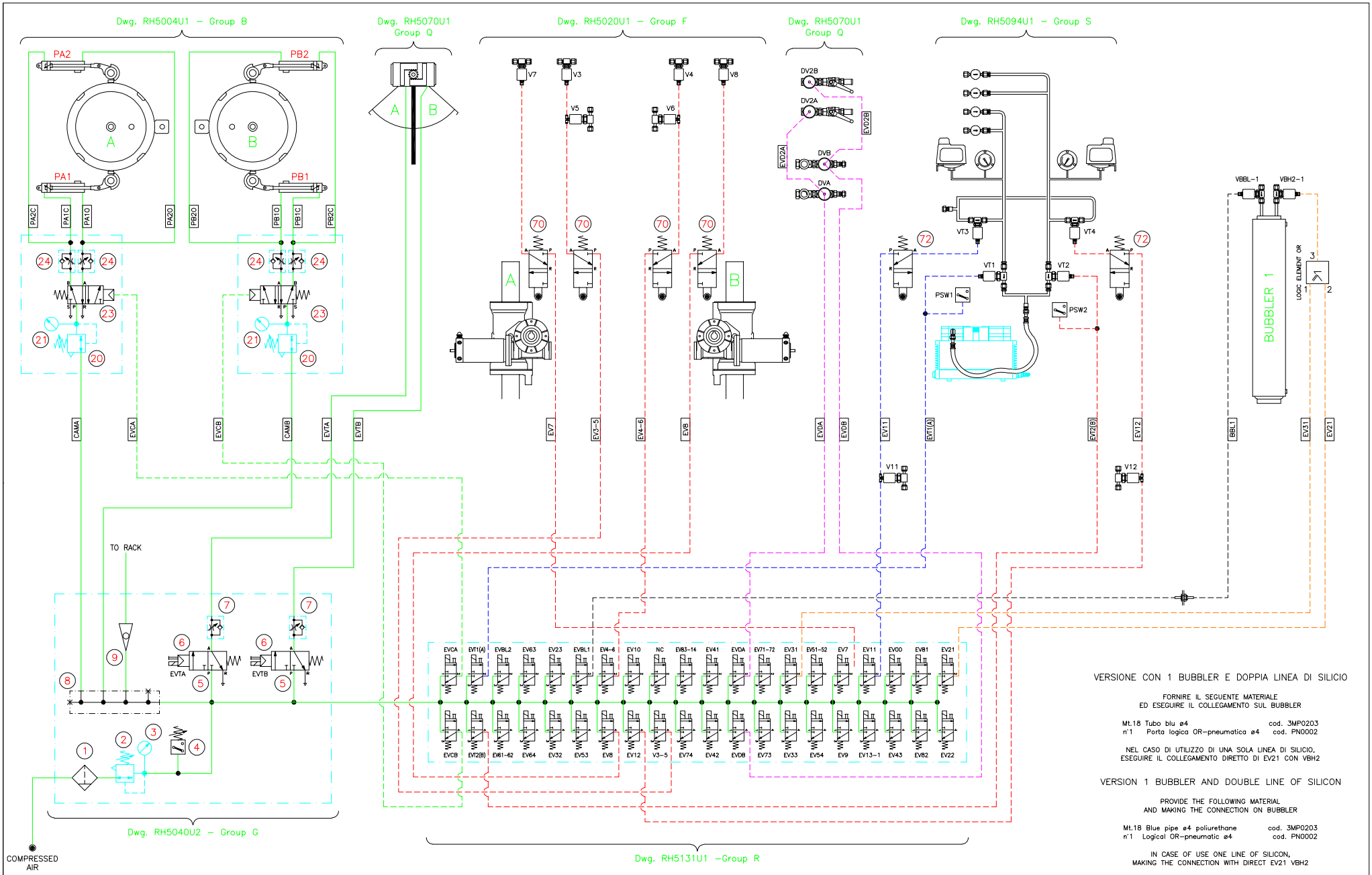

VERSIONE CON 1 BUBBLER E DOPPIA LINEA DI SILICIO

FORNIRE IL SEGUENTE MATERIALE
ED ESEGUIRE IL COLLEGAMENTO SUL BUBBLER

Mt.18 Tubo blu ø4 cod. 3MP0203
n°1 Porta logica OR–pneumatica ø4 cod. PN0002

NEL CASO DI UTILIZZO DI UNA SOLA LINEA DI SILICIO,
ESEGUIRE IL COLLEGAMENTO DIRETTO DI EV21 CON VBH2

VERSION 1 BUBBLER AND DOUBLE LINE OF SILICON

PROVIDE THE FOLLOWING MATERIAL
AND MAKING THE CONNECTION ON BUBBLER

Mt.18 Blue pipe ø4 poliurethane cod. 3MP0203
n°1 Logical OR–pneumatic ø4 cod. PN0002

IN CASE OF USE ONE LINE OF SILICON,
MAKING THE CONNECTION WITH DIRECT EV21 VBH2

Item	Qty	Description	Code

Measure without indication of tolerance ISO 2768 – m		Treatment	Material
Prepared by Alfredo Zamboni	Checked by V.O	Title PNEUMATIC SCHEME REACTOR PE2061S	Sheet 1/3
Original date 23/07/1998	Checked by N.S		Scale A1
Approved by D.C	Latest rev 07	Order No / Dwg No RH5040U1	Section / Group G

Powering the future

CONFIDENTIAL

This document and data disclosed herein is not to be reproduced used or disclosed in whole or in part to anyone without the permission of LPE S.p.A.

Rev.07 – Sostituzione cassetto elettrovalvole	26/11/2010	A. Zamboni
Modification description	Date	Prepared by

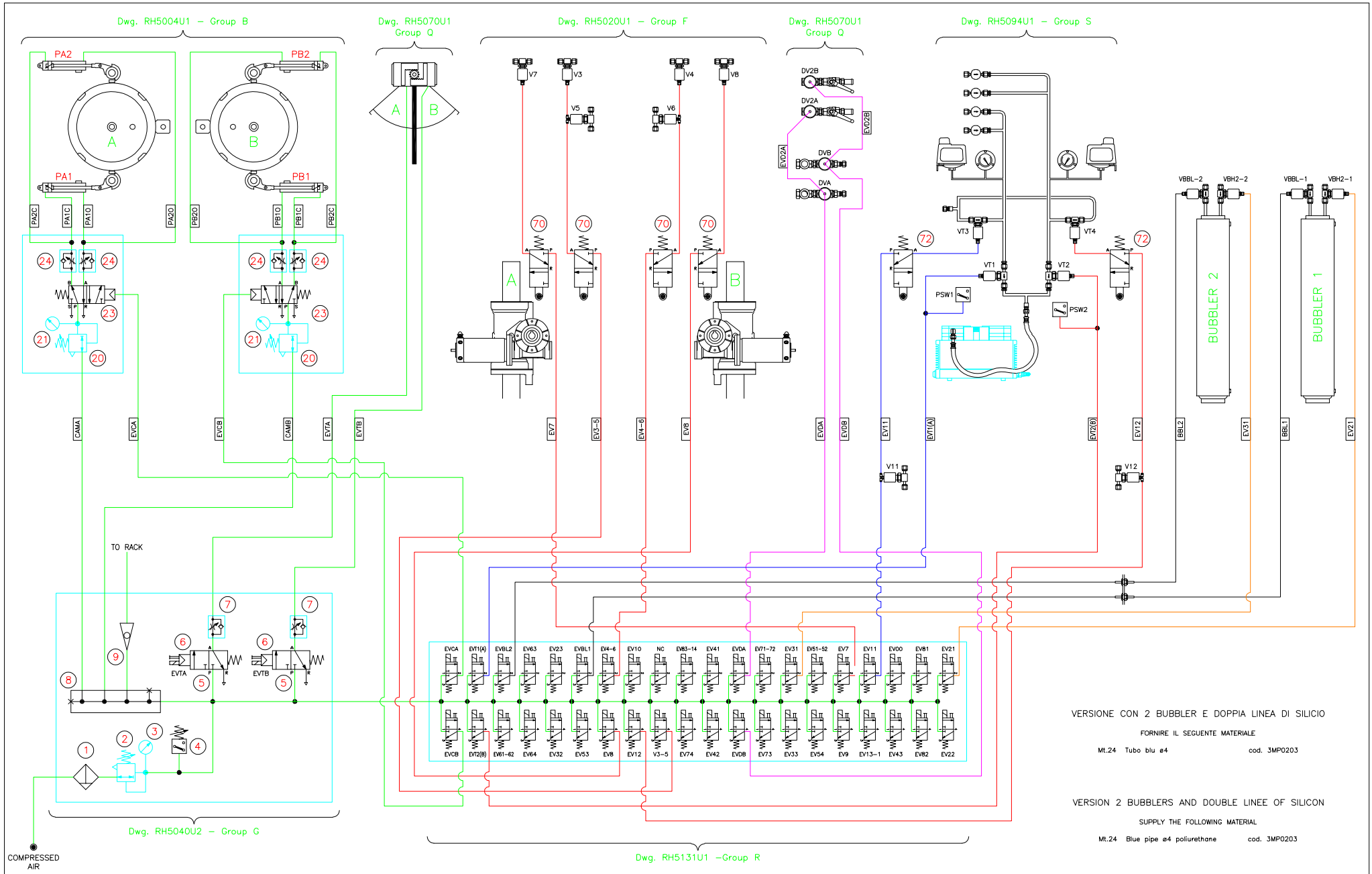

VERSIONE CON 2 BUBBLER E DOPPIA LINEA DI SILICIO

FORNIRE IL SEGUENTE MATERIALE

Mt.24 Tubo blu ø4 cod. 3MP0203

VERSION 2 BUBBLERS AND DOUBLE LINEE OF SILICON

SUPPLY THE FOLLOWING MATERIAL

Mt.24 Blue pipe ø4 poliurethane cod. 3MP0203

Rev.07 – Sostituzione cassetto elettrovalvole	26/11/2010	A. Zamboni
Modification description	Date	Prepared by

Item	Qty	Description	Code
Measure without indication of tolerance ISO 2768 – m	Treatment	Material	
Prepared by Alfredo Zamboni	Checked by V.O	Title PNEUMATIC SCHEME REACTOR PE2061S	Sheet 2/3
Original date 23/07/1998	Checked by		Scale A1
Approved by D.C	Order No	Dwg No RH5040U1	Section / Group G
Latest rev 07	CONFIDENTIAL	This document and data disclosed herein is not to be reproduced used or disclosed in whole or in part to anyone without the permission of LPE S.p.A.	

Powering the future

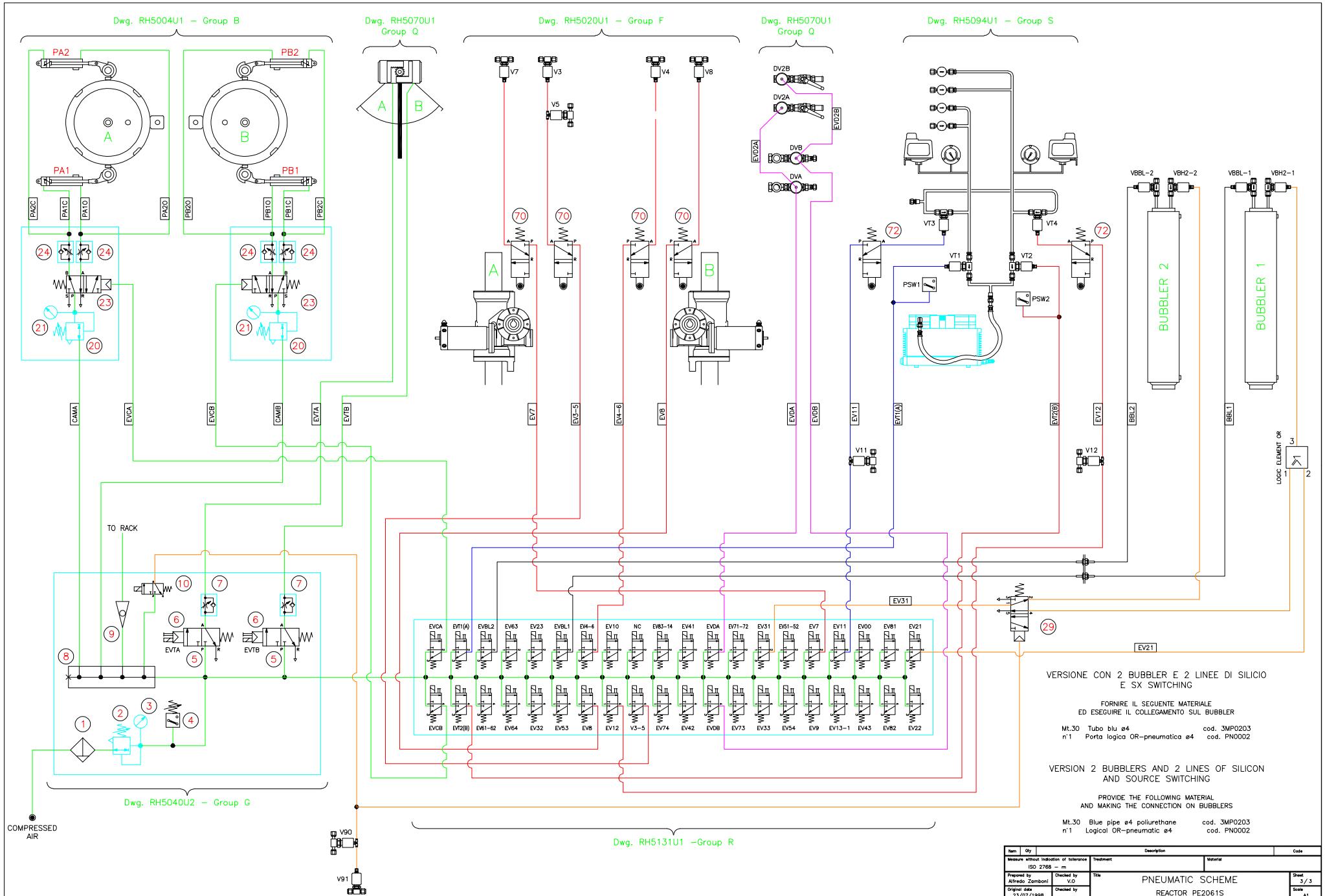

VERSIONE CON 2 BUBBLER E 2 LINEE DI SILICIO E SX SWITCHING

FORNIRE IL SEGUENTE MATERIALE ED ESEGUIRE IL COLLEGAMENTO SUL BUBBLER

Mt.30	Tubo blu ø4	cod. 3MP0203
n'1	Porta logica OR–pneumatica ø4	cod. PN0002

VERSION 2 BUBBLERS AND 2 LINES OF SILICON AND SOURCE SWITCHING

PROVIDE THE FOLLOWING MATERIAL AND MAKING THE CONNECTION ON BUBBLERS

Mt.30	Blue pipe ø4 poliurethane	cod. 3MP0203
n'1	Logical OR–pneumatic ø4	cod. PN0002

Item	Qty	Description	Code

Measure without indication of tolerance ISO 2768 – m	Treatment	Material	
Prepared by Alfredo Zamboni	Checked by V.O	Title PNEUMATIC SCHEME REACTOR PE2061S	Sheet 3/3
Original date 23/07/1998	Checked by		Scale A1
Approved by D.C	Order No	Dwg No RH5040U1	Section / Group G
Latest rev 07	CONFIDENTIAL	This document and data disclosed herein is not to be reproduced used or disclosed in whole or in part to anyone without the permission of LPE S.p.A.	

Powering the future

Rev.07 – Sostituzione cassetto elettrovalvole	26/11/2010	A. Zamboni
Modification description	Date	Prepared by

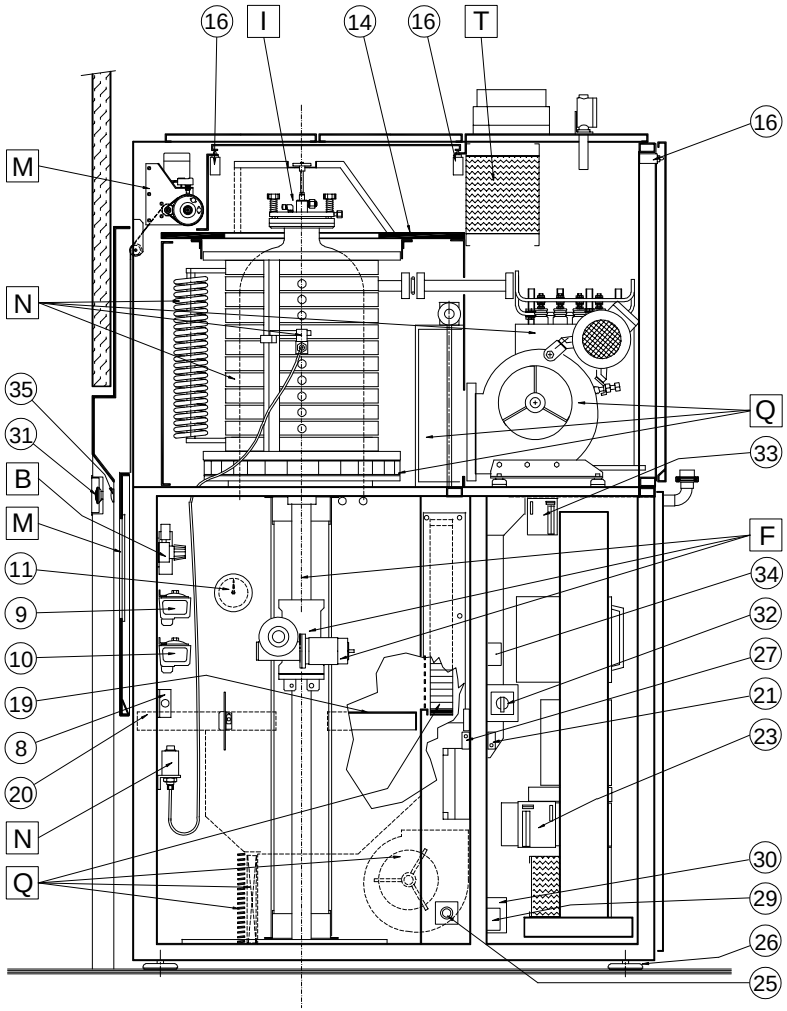

RIGHT VIEW (Items 1/40)

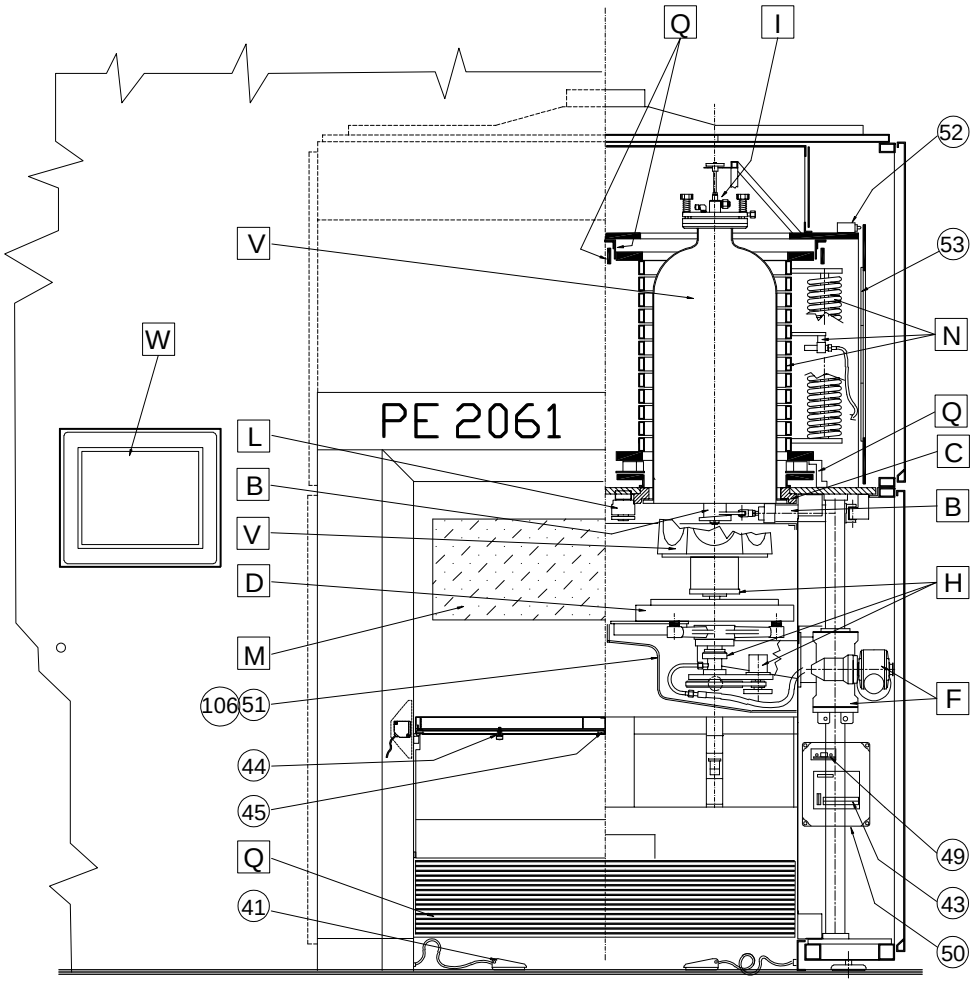

FRONT VIEW (Items 41/60)

Rev.09 – ADDED ITEM 106	04/05/2011	L.GOBBO
Modification description	Date	Prepared by

Item	Qty	Description	Code

Measure without indication of tollerance ISO 2768 – m	Treatment	Material

Prepared by	Checked by	Title	Sheet
Alfredo Zamboni	V. Ogliari	REACTOR COMPONENTS GROUPS	1/3
Original date 12/12/2000	Checked by	REACTOR PE 2061 S	Scale 1:15
LPE SpA Powering the future	Approved by D. Crippa	Order No / Dwg No RH5200U1 / Section / Group A	
	Latest rev 09	CONFIDENTIAL	

This document and data disclosed herein is not to be reproduced used or disclosed in whole or in part to anyone without the permission of LPE S.p.A.

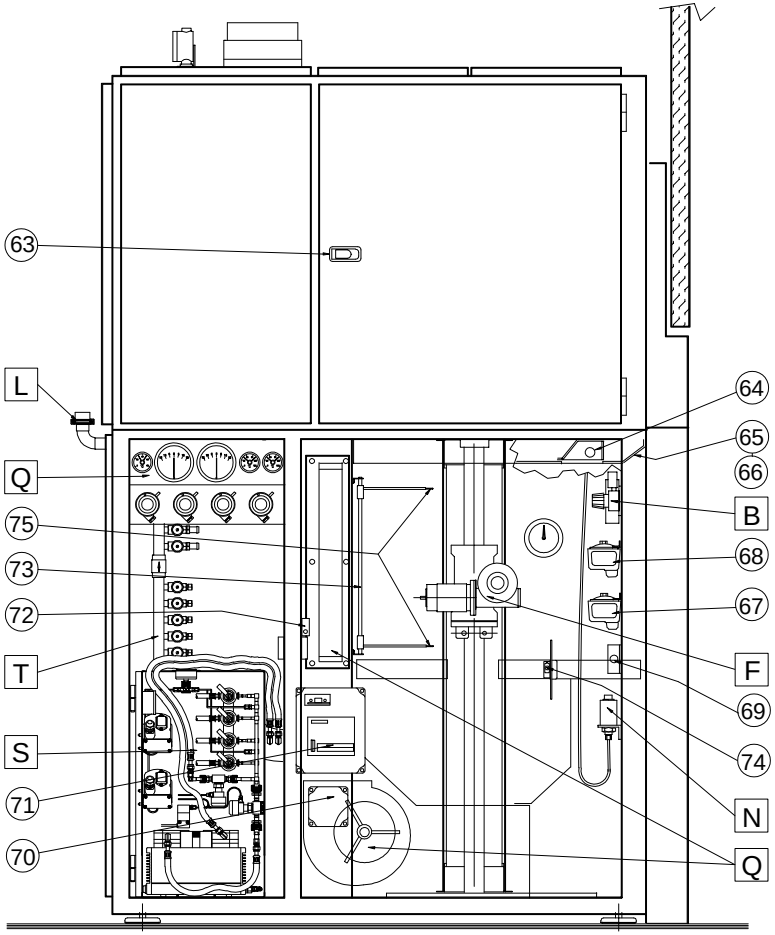

LEFT VIEW (Items 61/75)

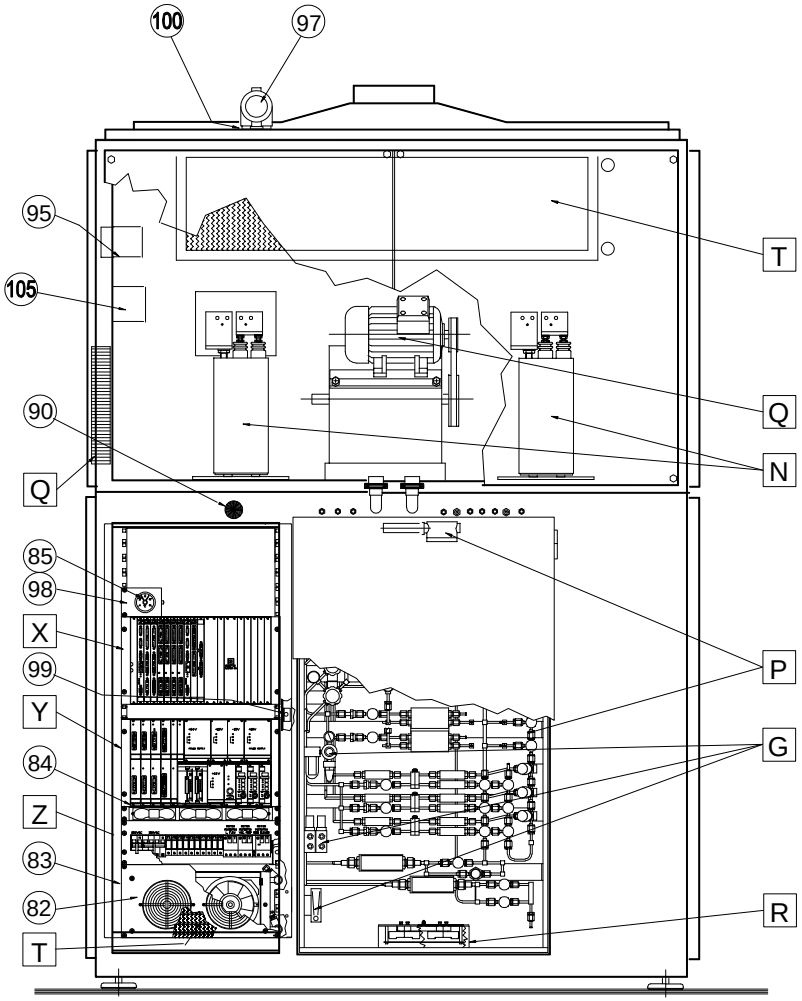

REAR VIEW (Items 76/110)

Rev.09 – ADDED ITEM 106	04/05/2011	L.GOBBO
Modification description	Date	Prepared by

Item	Qty	Description	Code
Measure without indication of tollerance ISO 2768 – m		Treatment	Material

Prepared by Alfredo Zamboni	Checked by V. Ogliari	Title REACTOR COMPONENTS GROUPS			Sheet 2 / 3
Original date 12/12/2000	Checked by	REACTOR PE 2061 S			Scale 1:15
LPE SpA Powering the future	Approved by D. Crippa	Order No	Dwg No RH5200U1	Section	Group A
	Latest rev 09	CONFIDENTIAL	This document and data disclosed herein is not to be reproduced used or disclosed in whole or in part to anyone without the permission of LPE S.p.A.		

ITEM	QTY	DESCRIPTION	CODE
8	1	SHILD SAFETY PHOTOCELL RECEIVER	OE0100
9	1	PRESSURE SWITCH WARNING STATION B	PQ0001
10	1	PRESSURE SWITCH ALARM STATION B	See item 9
11	1+1	VACUUM GAUGE +/-20mbar ø100mm (stands 10 times the roted pressure)	3MN0615
14	1+1	UPPER INSULATING PLATE	RH4812P6
16	6	MICROSWITCH DOORS UPPER STATION	IN0315
19	1	REAR DESK (FIXED)	RH4819G2
20	1	FRONT DESK (REMOVABLE)	RH4819G1
21	1	MICROSWITCH FOR ELECTRONICS CABINET SIDE DOOR	IN0065
23	1	DIGITAL INPUT CONNECTION CARD	SZ8201
25	1	VELOCITY REGULATOR FOR LAMINAR FLOW BLOWER (50Hz)	EM1431
	1	VELOCITY REGULATOR FOR LAMINAR FLOW BLOWER (60Hz)	EM1430
26	4	REACTOR SUPPORTING POINTS	EC0023
27	1	SAFETY SWITCH FOR LIFT INIBIT (STATION B)	IN0100+IN0101
29	1	NOISE FILTER 220 V	AC0100
30	1	NOISE FILTER 380 V	AC0101
31	1	EMERGENCY PUSH-BUTTON (FRONT)	IN0088+IN0089
32	1	MAIN SWITCH	IN0272
33	1	CONNECTION CARD (OPTIONAL)	SZ8211
34	1	EMERGENCY WATER BOX (OPTIONAL)	See (Z-1)
35	1	BUZZER	OA0016
41	2	FOOT SWITCH	IN0059
43	1	DIGITAL INPUT CONNECTION CARD	See item 23
44	1+1	TEFLON BUSH FOR QUARTZ-GUARD	RH4823P4
45	1	QUARTZ-GUARD TEFLON SLIDING BLOCKS (8 PIECES KIT)	RH4823G1
49	1+1	CLAMP PREAMPLIFIER PC BOARD	SZ0174
50	1+1	BOX dwg RH4520	
51	1+1	TURN PLATE GROUP PROTECTION CARTER dwg RE3945	04M228
52	2	SAFETY SWITCH FOR PANELS UPPER STATION	See item 27
53	3+3	QUARTZ WINDOW FOR REACTOR DOOR	WQ0040
63	6	PADDLE LATCHES mod.C2-33-15	EC0030
64	2	LAMP DULUX EL-20W (Osram)	OA0003
65	1	UPPER SHIELD STATION A	RH4821P2-P5
66	1	UPPER SHIELD STATION B	RH4821P4-P6
67	1	PRESSURE SWITCH ALARM STATION A	See item 9
68	1	PRESSURE SWITCH WARNING STATION A	See item 9
69	1	SHIELD SAFETY PHOTOCELL EMITTER (with item 8)	
70	1	EMERGENCY WATER BOX (OPTIONAL)	See (Z-1)
71	1	DIGITAL INPUT CONNECTION CARD	See item 23
72	1	SAFETY SWITCH FOR LIFT INIBIT (STATION A)	See Item 27
73	1	SUSCEPTOR CENTERING EQUIPMENT	RH4658G0
74	1+1	QUARTZ-GUARD SAFETY PHOTOCELL	OE0101
75	1	POINTS FOR CENTERING EQUIPMENT (2 PIECES KIT)	RH4658G1
82	2	FANS	MV0143
83	1	FANS SUPPORTING PANEL	RH4825P6
84	1	FAN COOLING UNIT	CT0224
85	1	THERMAL SWITCH FOR CONTROL UNIT 0+80øC	TM0025
90	1	EMERGENCY PUSH-BUTTON (REAR)	See item 31
95	1	ELECTRIC SUPPLY WIRES INLET BOX (LEGRANT 92252)	CT0251
97	1	HYDROGEN LEAK SENSING HEAD FOR REACTOR FRAME	SI0311
98	1	THERMAL SWITCH SUPPORT	RH4825P4
99	1	MICROSWITCH FOR ELECTRONICS CABINET SIDE DOOR	See item 21
100	1	HYDROGEN LEAK SENSING HEAD SUPPORT	RH4812P12
105	1	BOX FOR INTERNAL/EXTERNAL SERVICE	CT0249
106	2+2	PEEPHOLE FOR PROECTION CARTER	RH4822P17

GROUPS DESCRIPTIONS	
A	PE2061 GENERAL COMPONENTS & GROUPS
B	LOCKER GROUP
C	RING & UPPER PLATE GROUP
D	SHUTTER PLATE GROUP
E	
F	LIFTING & LIFTING-MOTOR GROUP
G	PNEUMATIC SCHEME
G	COMPRESSED AIR INLET DISTRIBUTION
H	TURN PLATE & MOTOR-FLYWHEEL GROUP
I	BELL JAR CAP GROUP
J	
K	
L	EXHAUST GAS VALVE GROUP
M	WINDER GROUP
N	INDUCTION COIL 16" & MF CAPACITOR GROUP
N	PYROMETER & OPTICAL FIBER GROUP
O	
P	GAS METERING SCHEME
P	GAS METERING LAY OUT
Q	AIR GROUP
R	ELECTROVALVES BOX GROUP
S	VACUUM TEST GROUP (SCHEME)
S	VACUUM TEST GROUP (LAY OUT)
T	WATER SCHEMATIC COOLING SYSTEM
T	WATER LAY OUT COOLING SYSTEM
T	EMERGENCY WATER SCHEMATIC
U	
V	QUARTZ & GRAPHITE STUFFS
W	ELECTRONIC CONTROL PANEL GROUP
X	VME ELECTRONIC GROUP
Y	POWER SUPPLY / DRIVERS GROUP
Z	AC POWER INPUT / DRIVERS GROUP

Prepared by	Date	Modification description
L.GOBBO	04/05/2011	Rev.09 – ADDED ITEM 106

Item	Qty	Description	Code

Measure without indication of tollerance	Treatment	Material

Prepared by	Checked by	Title	Sheet
Alfredo Zamboni	V.O	REACTOR COMPONENTS GROUPS	3 / 3
Original date	Checked by	REACTOR PE 2061 S	Scale
28/07/03	N.S		

Approved by	Order No	Dwg No	Section	Group
D.C		RH5200U1		A
Latest rev 09				

LPE SpA Powering the future

CONFIDENTIAL This document and data disclosed herein is not to be reproduced used or disclosed in whole or in part to anyone without the permission of LPE S.p.A.

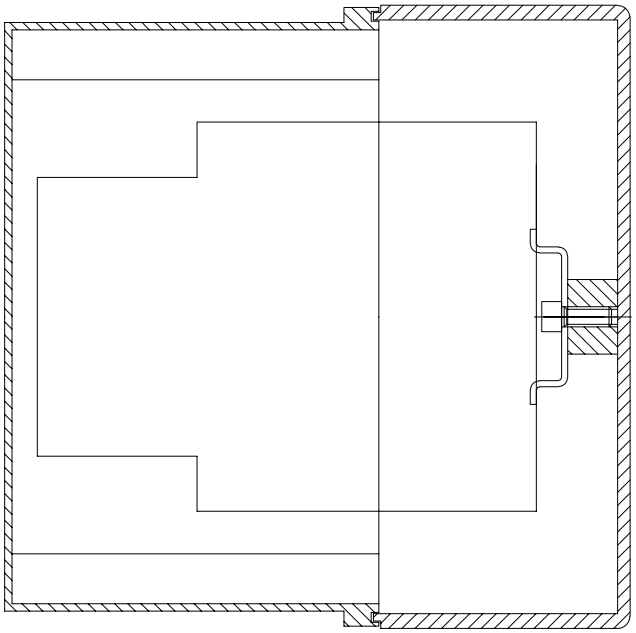

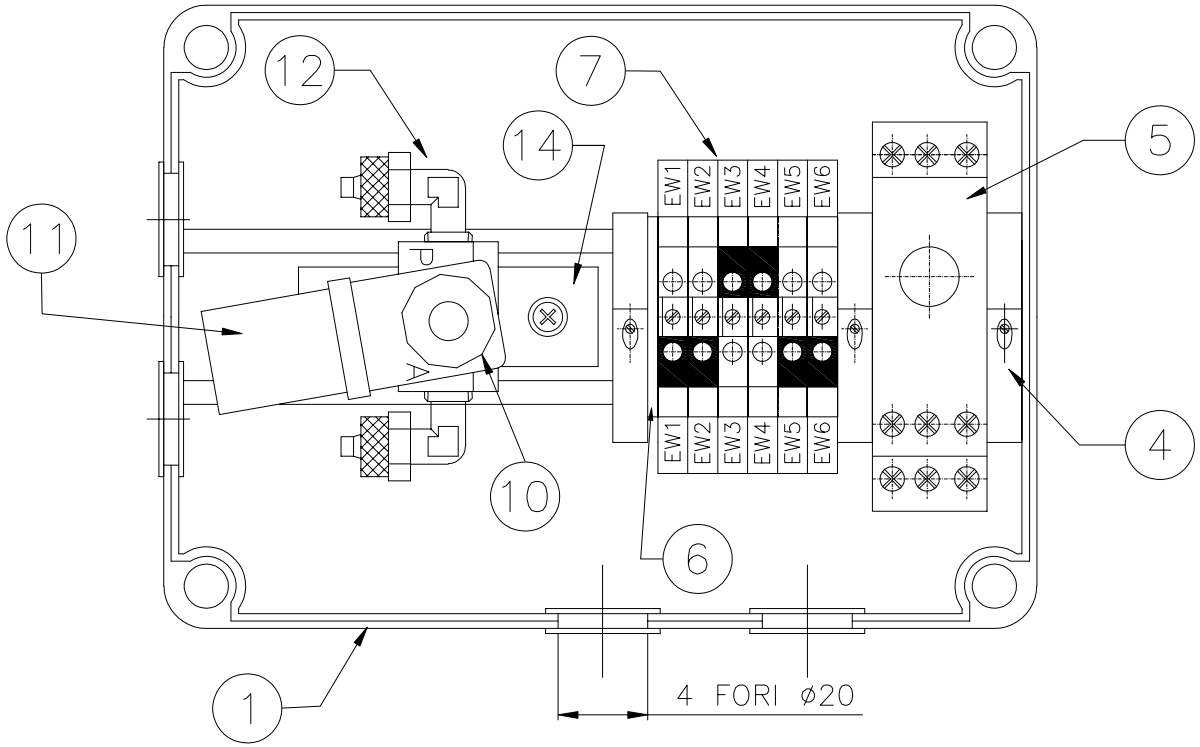

VALID FROM S.N. 94

Item	Qty	Description	Code
14	1	UNDER PLATE FOR SOLENOID VALVE EMERGENCY WATER	RH4849P1
12	2	ELBOW BEND 6/4– 1/8 – 1500–6–1/8	PN0145
11	1	PLASTIC CONNECTOR x COIL	PN0167
10	1	SOLENOID VALVE A331–1C2–A7B–24VAC	PN0155
7	6	CABLE CLAMP 4 mmq LE 39061	CT0103
6	1	COVER FOR CABLE CLAMP LE 39450	CT0101
5	1	TIMER 20–30V=20–260V	TM0060
4	3	BACKSTOP EW 35	CT0235
1	1	BOX 175x125X125h	CT0246

Measure without indication of tollerance ISO 2768 – m		Treatment	Material
Prepared by: Laura Gobbo	Checked by: V.O.	Title: EMERGENCY WATER BOX	Sheet: 1/2
Original date: 16/09/2002	Checked by:		Scale: A3
LPE SpA Powering the future	Approved by: D.C.	Order No:	Dwg No: RH4842U; Section: ; Group: A70
	Latest rev: 02	CONFIDENTIAL	This document and data disclosed herein is not to be reproduced used or disclosed in whole or in part to anyone without the permission of LPE S.p.A.

Modification description	Date	Prepared by
Rev 01: added item 6 and 7 (sheet 2) Rev 02:modified item 4 and 5	23/06/2010	L.GOBBO

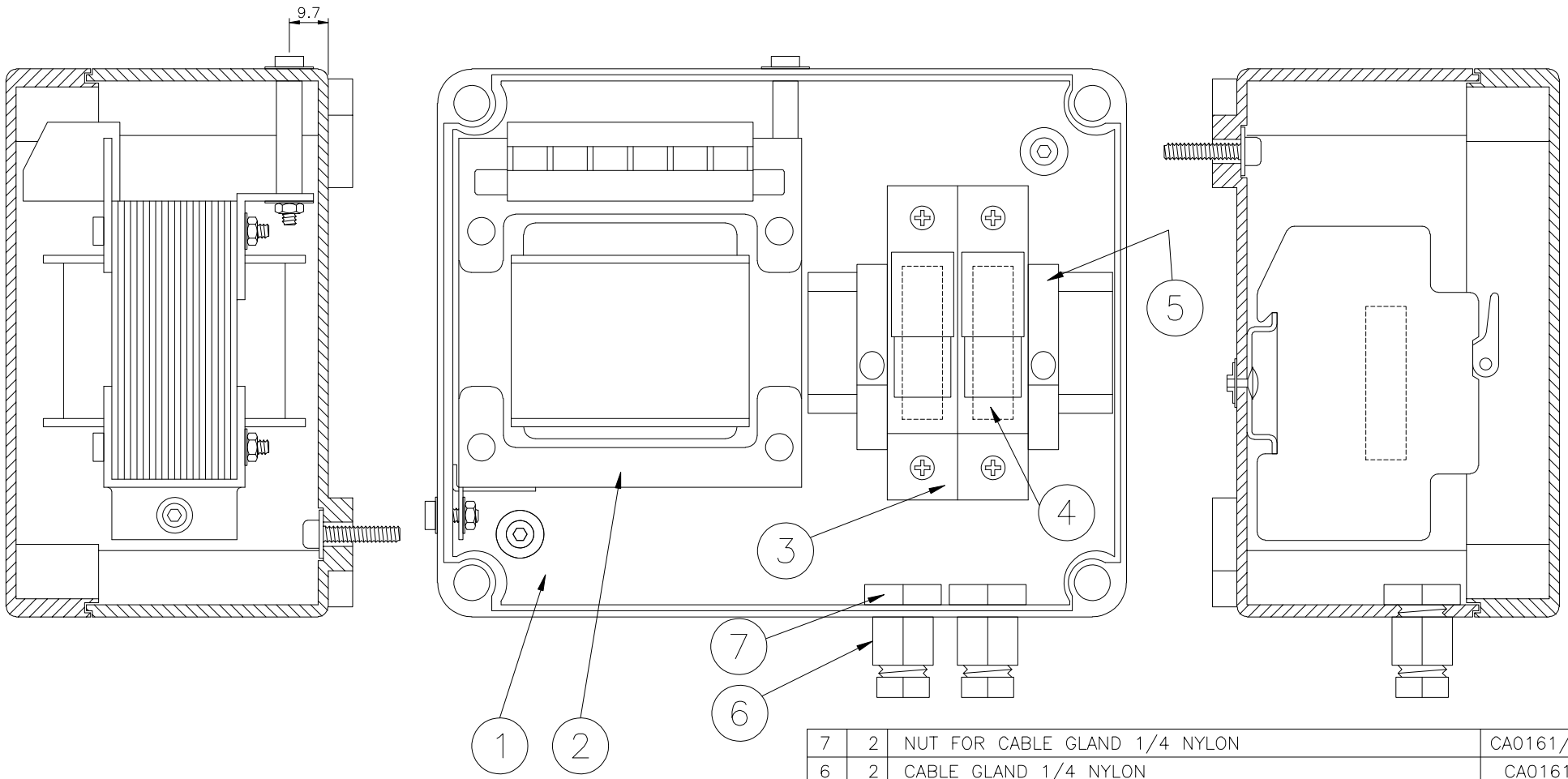

VALID FROM S.N. 94

Item	Qty	Description	Code
7	2	NUT FOR CABLE GLAND 1/4 NYLON	CA0161/D
6	2	CABLE GLAND 1/4 NYLON	CA0161
5	2	BACKSOP EW 35	CT0235
4	2	FUSE 0.25 AM10.3x38	SI0110
3	2	FUSE HOLDER 10x38 32A-2301038	SI0100
2	1	TRANSFORMER 230-115/24V 50VA	EM0051
1	1	BOX IP55 164x129x70	CT0257

Measure without indication of tollerance ISO 2768 – m		Treatment	Material		
Prepared by	Checked by V.O.	Title EMERCENCY WATER BOX			Sheet 2 / 2
Original date 16/09/2002	Checked by				Scale 1:1
LPE SpA Powering the future	Approved by D.C.	Order No	Dwg No RH4842U	Section	Group A34
	Latest rev 02	CONFIDENTIAL	This document and data disclosed herein is not to be reproduced used or disclosed in whole or in part to anyone without the permission of LPE S.p.A.		

Modification description	Date	Prepared by
Rev 01: added item 6 and 7 (sheet 2) Rev 02:modified item 4 and 5	23/06/2010	L.GOBBO

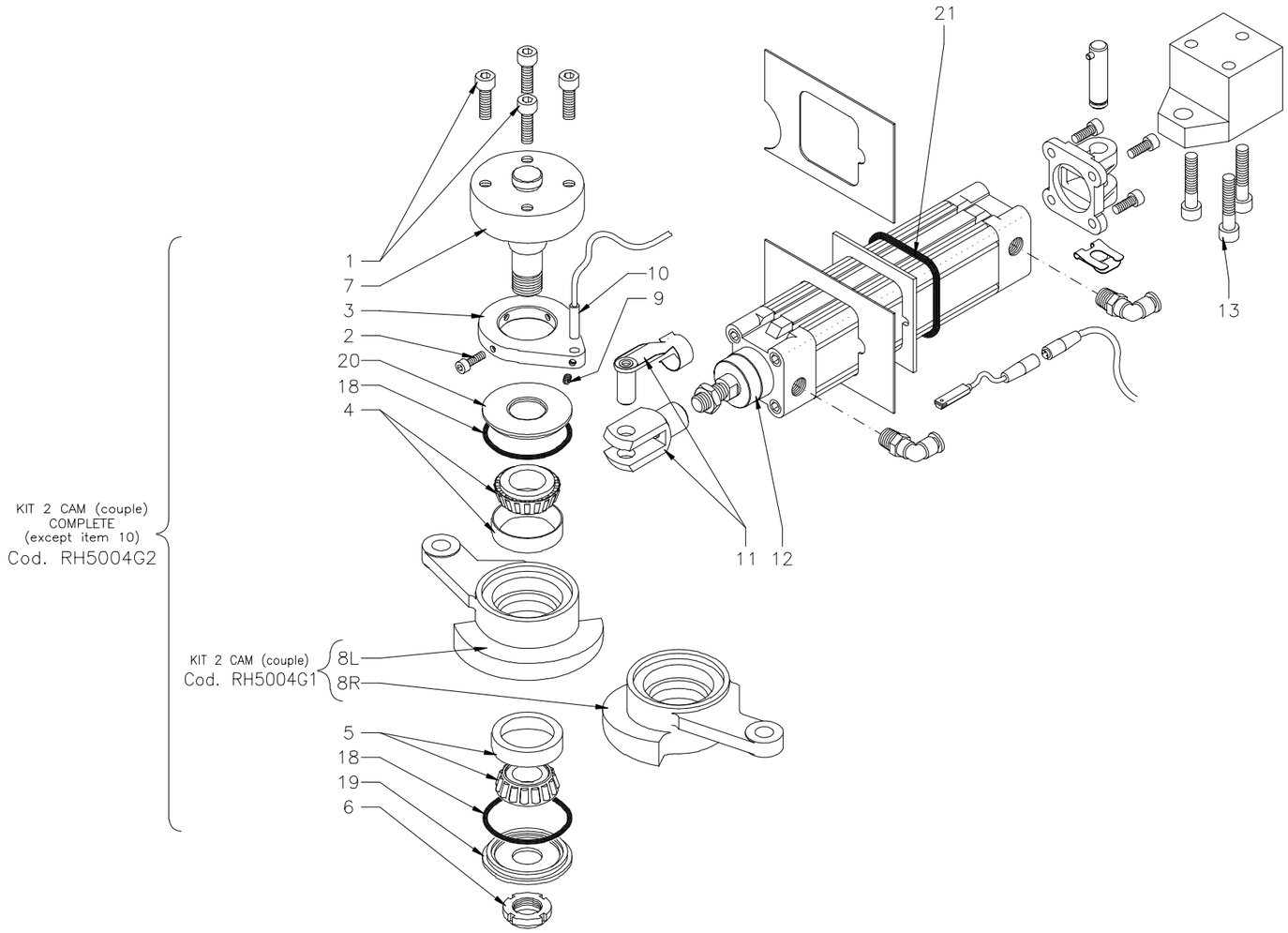

PNEUMATIC & WIRING SCHEMATIC

CONNECTION PC BOARD – Dwg. A71

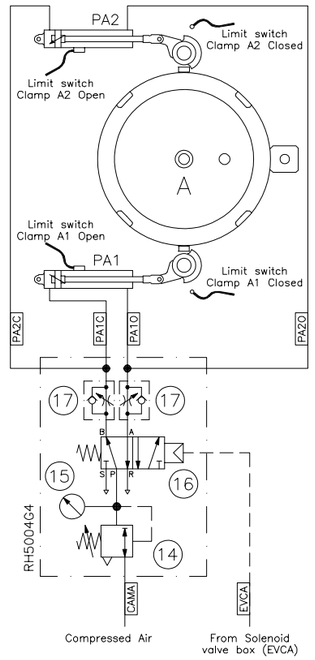

CONNECTION PC BOARD – Dwg. A43

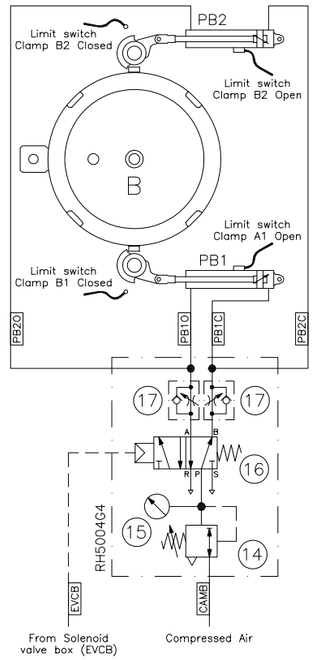

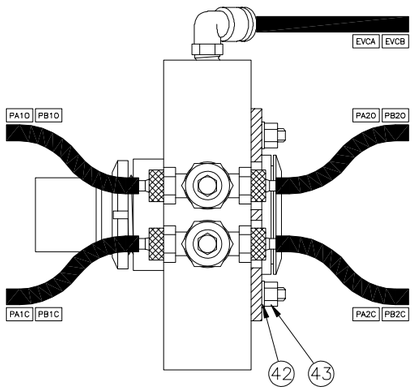

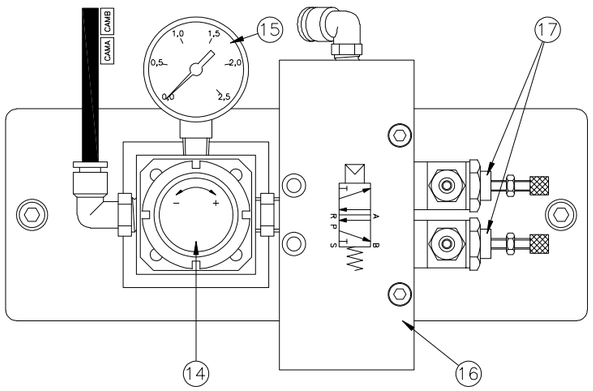

PNEUMATIC GROUP KIT
Cod. RH5004G4

Item	Qty	Description	Code
21	1	O–RING 6212 VITON (or 2–330 Parker)	GU1330
20	1	UPPER GASKET DISK	RH5004P4
19	1	LOWER GASKET DISK	RH5004P5
18	2	O–RING 156 VITON	GU0122
17	2	FLOW REGULATOR–MCU–706–1/4	PN0159
16	1	DISTRIBUTOR 5/2 WAYS 1/4" TYPE 454/35	PN0012
15	1	MANOMETER M040R–Ø40–1/8–0÷2,5BAR (0÷25PSI)	MN0113
14	1	PRESSURE REGULATOR C114–R–00	RG0006
13	3	SCREW M8x40 UNI 5931	VT0622
12	1	CYLINDER GROUP	RH5004G6
11	1	FORK TYPE SG–M12x1,25	PN0014
10	1	SENSOR EL. M–DC 6.5/4600 BDC	RL0002
9	1	GRUB SCREW M5x6 UNI 5923	VT0805
8L	1	CAM, LEFT – COUNTERCLOCKWISE CLOSE	RH5004P2
8R	1	CAM, RIGHT – CLOCKWISE CLOSE	RH5004P1
7	1	SHAFT	RH5004P3
6	1	SQUEGGING RING GUP 20x1	3CU0021
5	1	BEARING 30204	CU0026
4	1	BEARING 32005	CU0021
3	1	SUPPORT	RH5004P6
2	1	SCREW M5x16 UNI 5931	VT0030
1	4	SCREW M8x25 UNI 5931	VT0617

Modification description	Date	Prepared by
Correzione sul Cylinder Group RH5004G6 e modificata distinta	17/05/2007	DDP

Measure without indication of tollerance | Treatment | Material

Prepared by: Alfredo Zamboni | Checked by: V. Ogliari | Original date: 15/11/1997 | Checked by:

Approved by: D. Crippa | Latest rev: 04

Title: REACTOR PE 2061S
LOCKER GROUP

Sheet: 1/ 1 | Scale: A3 | Order No | Dwg No: RH5004U1 | Section | Group: B

LPE SpA Powering the future

CONFIDENTIAL

This document and data disclosed herein is not to be reproduced used or disclosed in whole or in part to anyone without the permission of LPE S.p.A.

A2

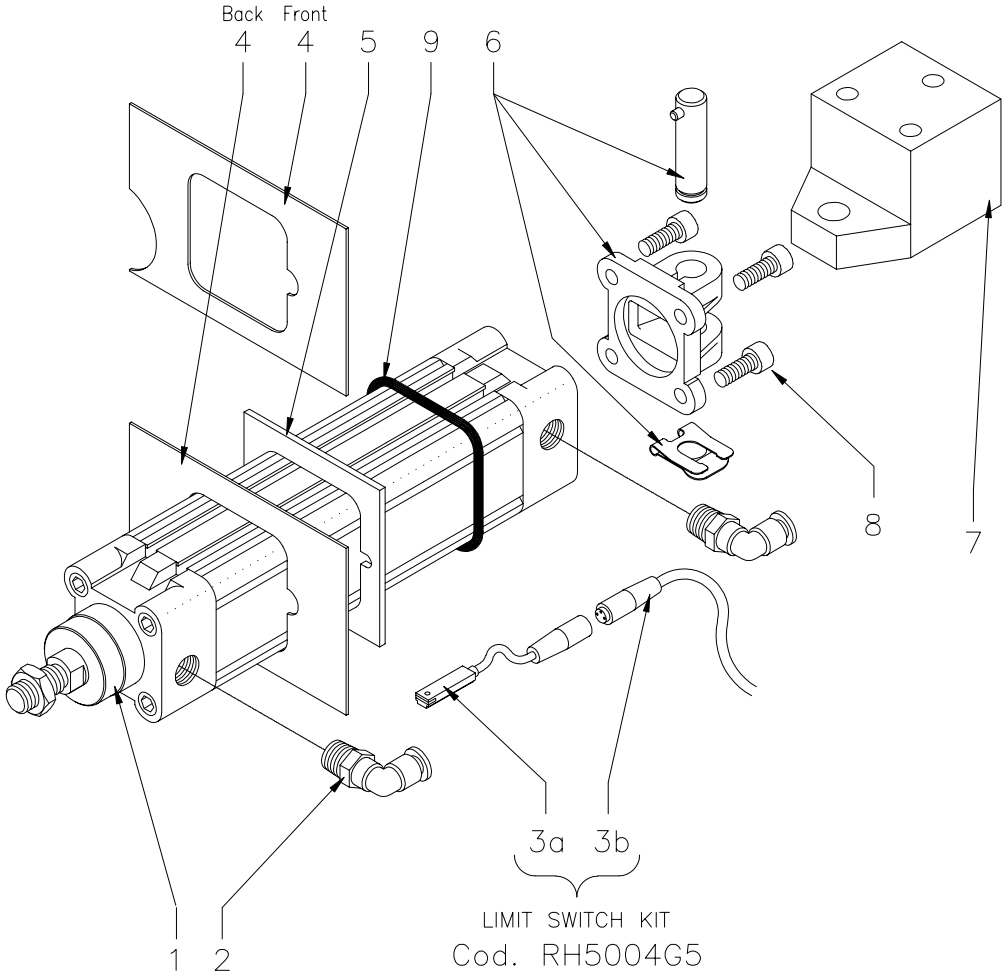

Prepared by	F. Corea	
Date	18/03/2013	
Modification description	Rev.03: Aggiornato codice cilindro pneumatico. sensore e cavo prolunga	

Item	Qty	Description	Code
9	1	O-RING 6212 VITON (or 2-330 Parker)	GU1330
8	4	SCREW M6 x 16 UNI 5931	VT0036
7	1	BLOCK	RH5004P8
6	1	HINGE WITH PIN TYPE SNC-40	PN0016
5	1	VITON GASKET	RH4818P17
4Fr	1	FRONT SIDE	RH4818P15
4Ba	1	BACK SIDE	RH4818P16
3b	1	SOCKET 8M, 3PIN + CABLE	PN0150
3a	1	PROXIMITY SENSOR (MAGNETIC REED) + SOCKET 8M, 3PIN	PN0127
2	2	ELBOW PNEUMATIC UNION 1/4" - 6	3PN6504
1	1	PNEUMATIC CYLINDER	PN0018LV

Measure without indication of tollerance ISO 2768 – m		Treatment	Material		
Prepared by Davide DePaola	Checked by V.Ogliari	Title CYLINDER GROUP			Sheet 1/ 1
Original date 12/03/2007	Checked by				Scale A4
LPE SpA Powering the future	Approved by D.Crippa	Order No	Dwg No RH5004G6	Section	Group
	Latest rev 03	CONFIDENTIAL	This document and data disclosed herein is not to be reproduced used or disclosed in whole or in part to anyone without the permission of LPE S.p.A.		

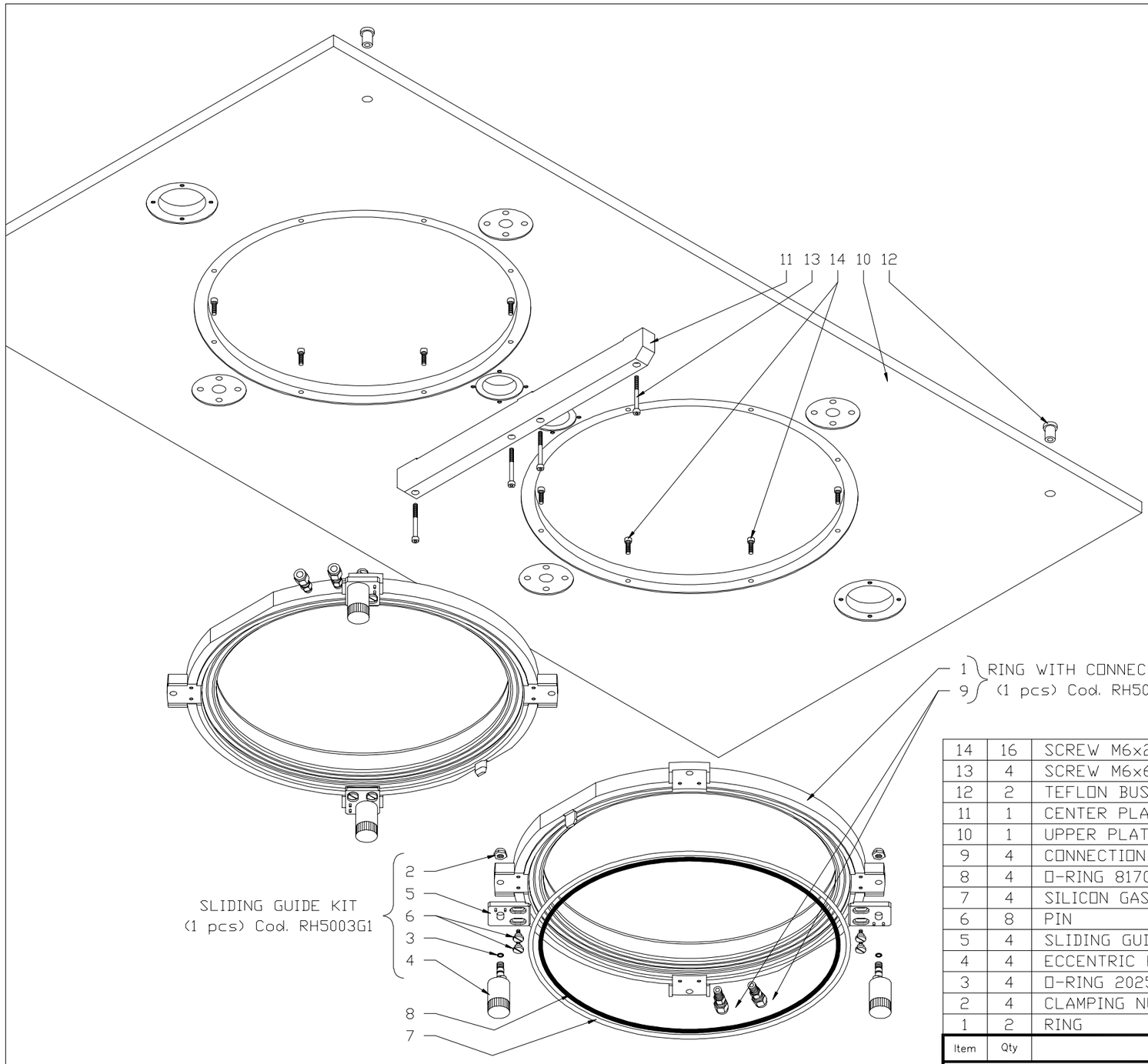

Item	Qty	Description	Code
14	16	SCREW M6x20 UNI 5931	VT0071
13	4	SCREW M6x60 UNI 5931	VT0096
12	2	TEFLON BUS FOR OPTICAL FIBER	RH5001P2
11	1	CENTER PLATE SUPPORT	RH5001P3
10	1	UPPER PLATE	RH5001P1
9	4	CONNECTION SS 600-1-4	RA0003
8	4	O-RING 81700 VITON-80Sh-(or 2-463 Parker)	GU0818
7	4	SILICON GASKET TUBE ø 5 x ø 8 LENGTH mm 1467	RH5002P5
6	8	PIN	RH5003P3
5	4	SLIDING GUIDE	RH5003P1
4	4	ECCENTRIC PIN	RH5003P2
3	4	O-RING 2025 VITON (or 2-010 Parker)	GU0068
2	4	CLAMPING NUT M10	DA0012
1	2	RING	RH5002

Modification description	Date	Prepared by
Rev.01 – General update	23/06/2010	A. Zamboni

Measure without indication of tollerance

Treatment

Material

Prepared by: Alfredo Zamboni

Checked by: V. Ogliari

Original date: 13/07/1998

Checked by: N. Speciale

Approved by: D. Crippa

Latest rev: 01

Title: RINGS & UPPER PLATE GROUP

REACTOR PE 2061 S

Sheet: 1/ 1

Scale

Order No

Dwg No: RH5000U1

Section

Group: C

LPE SpA — Powering the future

CONFIDENTIAL

This document and data disclosed herein is not to be reproduced used or disclosed in whole or in part to anyone without the permission of LPE S.p.A.

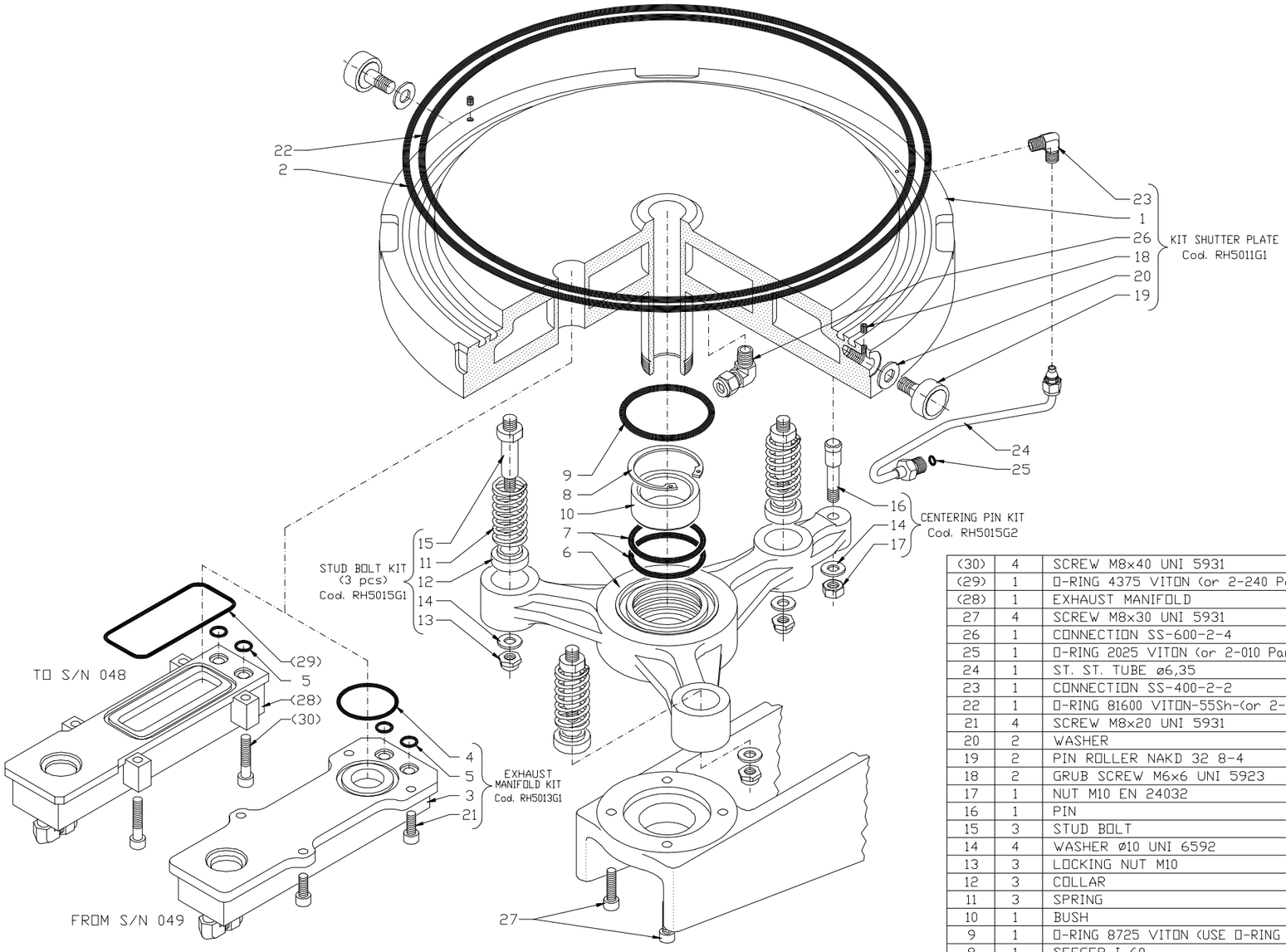

Item	Qty	Description	Code
(30)	4	SCREW M8x40 UNI 5931	VT0622
(29)	1	O-RING 4375 VITON (or 2-240 Parker)	GU0096
(28)	1	EXHAUST MANIFOLD	04M218
27	4	SCREW M8x30 UNI 5931	See(F-25)
26	1	CONNECTION SS-600-2-4	RA0002
25	1	O-RING 2025 VITON (or 2-010 Parker)	GU0068
24	1	ST. ST. TUBE ø6,35	RH4856P5
23	1	CONNECTION SS-400-2-2	RA0032
22	1	O-RING 81600 VITON-55Sh-(or 2-461 Parker)	GU8160
21	4	SCREW M8x20 UNI 5931	VT0616
20	2	WASHER	RH5011P4
19	2	PIN ROLLER NAKD 32 8-4	CU0024
18	2	GRUB SCREW M6x6 UNI 5923	VT0865
17	1	NUT M10 EN 24032	DA0010
16	1	PIN	RH5015P7
15	3	STUD BOLT	RH5015P4
14	4	WASHER ø10 UNI 6592	RN0035
13	3	LOCKING NUT M10	DA0012
12	3	COLLAR	RH5015P6
11	3	SPRING	RH5015P5
10	1	BUSH	RH5015P3
9	1	O-RING 8725 VITON (USE O-RING 7mm.SECTION AND CUT TO THE MEASURE)	GU8725
8	1	SEEGER I 60	CG0032
7	2	O-RING 6225 VITON (or 2-331 Parker)	GU0086
6	1	SUPPORT	RH5015P0
5	2	O-RING 3043 VITON (or 2-111 Parker)	GU0069
4	1	O-RING 4175 VITON (or 2-224 Parker)	GU0002
3	1	EXHAUST MANIFOLD	RH5013
2	1	O-RING 81700 VITON-55Sh-(or 2-463 Parker)	GU8170
1	1	SHUTTER PLATE (TOTAL SHIELD)	RH5011P0

Modification description	Date	Prepared by
Rev.01 – General update	23/06/2010	A. Zamboni

Measure without indication of tollerance

Treatment

Material

Prepared by: Alfredo Zamboni

Checked by: V. Ogliari

Original date: 27/08/1998

Checked by: N. Speciale

Approved by: D. Crippa

Latest rev: 01

Title: SHUTTER PLATE (TOTAL SHILD)

REACTOR PE 2061 S

Sheet: 1/ 1

Scale: 1:5

Order No

Dwg No: RH5010U1

Section

Group: D

LPE SpA — Powering the future

CONFIDENTIAL

This document and data disclosed herein is not to be reproduced used or disclosed in whole or in part to anyone without the permission of LPE S.p.A.

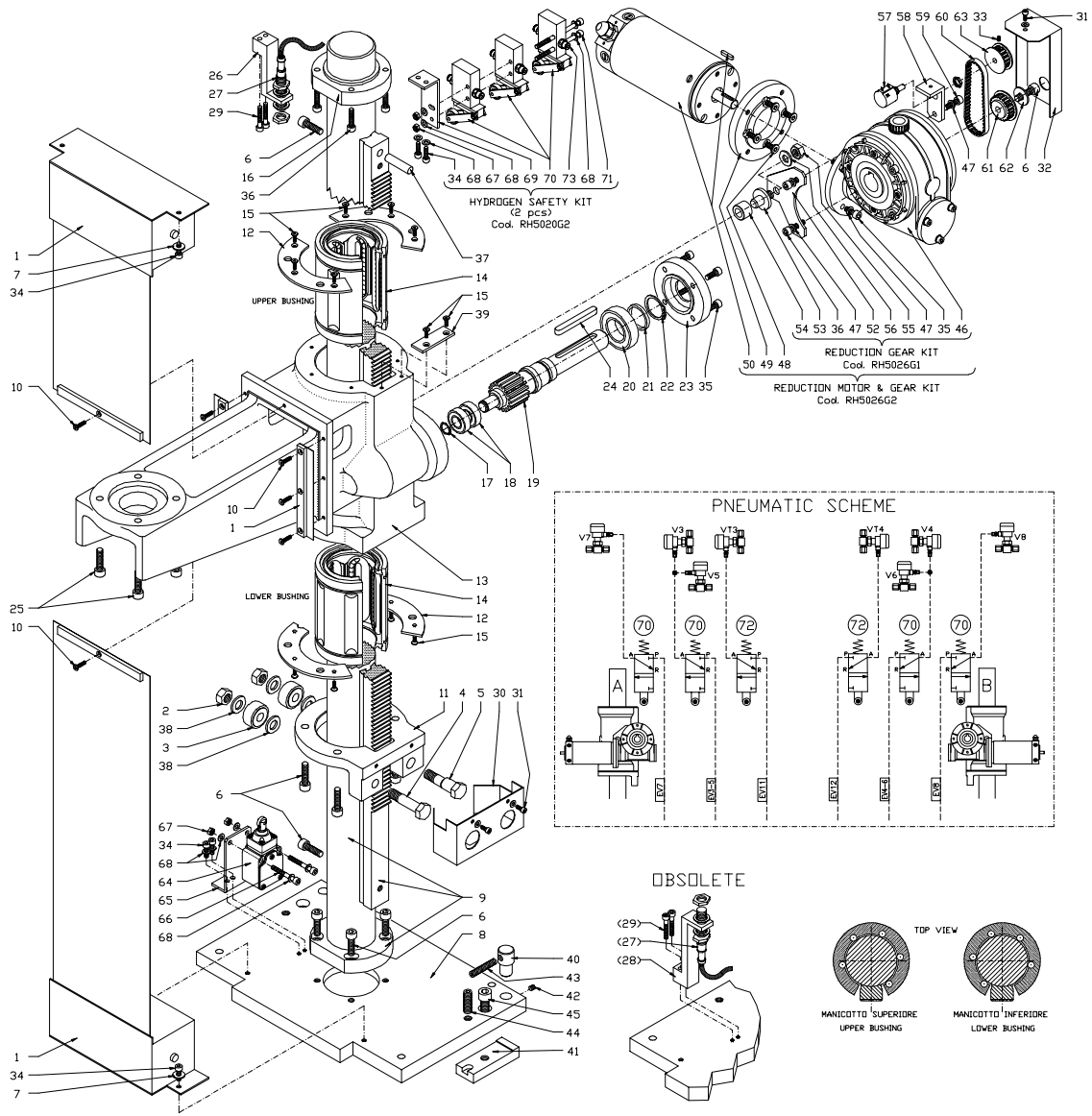

Rev.06 – Eliminata pos. 72 perchè incorporata nella pos. 70 e aggiunto pos. 73	08/06/2011	A. Zamboni
Modification description	Date	Prepared by

A2

Item	Qty	Description	Code
73	6	STRAIGHT PNEUMATIC UNION 1/8" KJH04-01S	3PN4081
72			
71	2	SCHREW M5x75 UNI 5931	VT0060
70	3	SAFETY PNEUMATIC VALVE 338-955	PN0146
69	1	SUPPORT	RH5024P8
68	12	WASHER Ø5x10 UNI 6592	RN0031
67	4	NUT M5 EN 24032	DA0005
66	2	SCHREW M5x40 UNI 5931	VT0034
65	1	SUPPORT	RH5024P4
64	1	MICROSWITCH Type FC315	IN0315
63	1	PULLEY	RH5027P2
62	1	WASHER Ø9x24 UNI 6593	RN0824
61	1	PULLEY	RH5027P3
60	1	BELT	CC0014
59	1	SCREW M6x20 UNI 5931	VT0071
58	1	SUPPORT	RH5027P1
57	1	POTENTIOMETER	PD0220
56	1	WASHER Ø10 UNI 6592	RN0035
55	1	NUT M10 EN 24032	DA0010
54	1	SHOCK ABSORBER	RH5026P4
53	1	PLUG	RH5026P3
52	1	PLATE FOR REDUCTION GEAR	RH5026P2
51			
50	1	MOTOR & TANGENT WEDGE 4x3,5x20	RH5026P7
49	1	MOTOR SUPPORT	RH5026P6
48	4	SCHREW M6x16 UNI 5933	VT0227
47	5	WASHER Ø6 UNI 6592	RN0033
46	1	REDUCTION GEAR	RH5026P1
45	2	SCREW M10x35 UNI 5931	VT0624
44	2	GRUB SCHREW M10x30 UNI 5923	VT0808
43	2	GRUB SCHREW M8x40 UNI 5923	VT0811
42	2	GRUB SCHREW M6x6 UNI 5923	VT0865
41	2	PLATE CLAMP	RH5024P7
40	2	PLUG	RH5024P6
39	1	THREADED PROTECTION	RH4837P4
38	4	WASHER Ø12 UNI 6592	RN0036
37	1	PIN Ø10x40 UNI 8734	CG0045
36	6	SCREW M6x25 UNI 5931	VT0621
35	6	SCREW M6x16 UNI 5931	VT0036
34	8	SCREW M5x16 UNI 5931	VT0030
33	1	GRUB SCHREW M4x5 UNI 5923	VT0804
32	1	PULLEY PROTECTION	RH4837P2
31	3	SCREW M4x10 UNI 5931 + WASHER Ø4x9	VT0021
30	1	ROLLER PROTECTION	RH4837P3
29	2 (2)	SCREW M5x30 UNI 5931	VT0035
28	(1)	SUPPORT	04M119
27	1 (1)	PROXIMITY SWITCH DCA12	RL0091
26	1	SUPPORT	RH5024P5
25	4	SCREW M8x30 UNI 5931	VT0618
24	1	TANGENT WEDGE 8x7x70	CG0028
23	1	CAP	RH5021P7
22	1	SEEGER RING E30	CG0030
21	1	SPACER	RH5021P6
20	1	BALL BEARING 6006-2RS	CU0020
19	1	PINION	RH5021P5
18	2	BALL BEARING 6002-2RS	CU0027
17	1	SEEGER RING E15	CG0025
16	1	UPPER RING	RH5022P4
15	14	SCREW M4x12 UNI 5933	VT0222
14	2	BALL BUSHING : 0362-060-STAR	CU0025
13	1	SUPPORT	RH5021P0
12	2	HALF RING	RH5021P3
11	1	FLANGE	RH5023P0
10	8	SCREW M4x16 UNI 5933	VT0216
9	1	TIE BAR ASSEMBLED	RH5022P0
8	1	LOWER PLATE	RH5024P1
7	4	WASHER Ø5x15 UNI 6593	RN0009
6	15	SCREW M8x25 UNI 5931	VT0611
5	1	ECCENTRIC PIN	RH5023P4
4	1	PIN	RH5023P3
3	2	ROLLER NATD 12	CU0023
2	2	NUT M12x1,25 EN 28673	DA0036
1	2	SLIDE & SIDE PLATE	RH5024P2

Measure without indication of tollerance | Treatment | Material

Prepared by	Checked by	Title	Sheet
Vincenzo Ogliari	V. Ogliari	LIFTING GROUP	1/1
Original date 4/2007	Checked by N. Speciale	REACTOR PE 2061 S	Scale 1:5
	Approved by D. Crippa	Order No / Dwg No RH5020U1 / Section / Group F	
	Latest rev 06		

LPE S.p.A. Powering the future

CONFIDENTIAL

This document and data disclosed herein is not to be reproduced used or disclosed in whole or in part to anyone without the permission of LPE S.p.A.

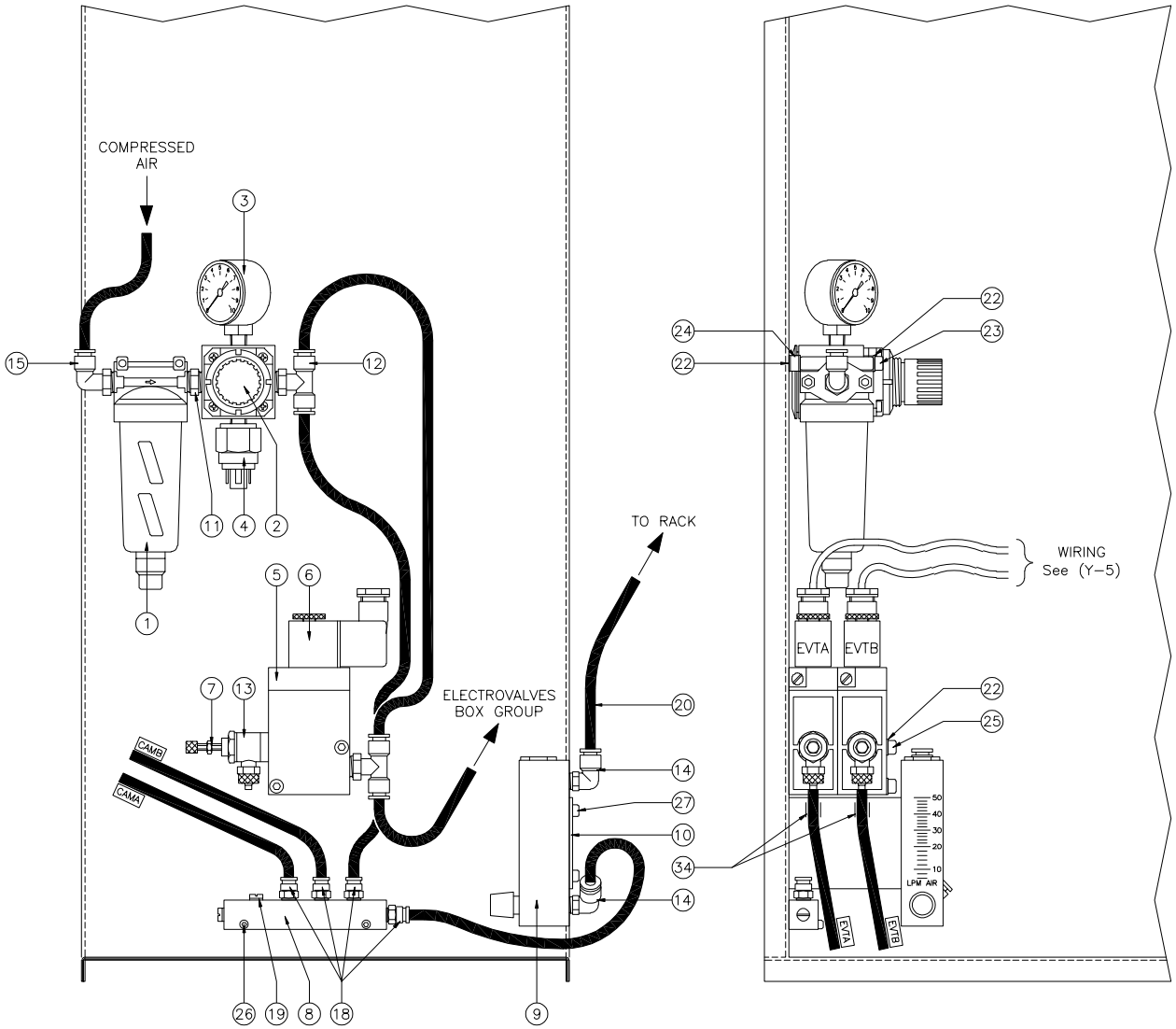

STANDARD VERSION

Item	Qty	Description	Code
34	2	SPOLILER RESTRICTION (INSIDE THE PIPE)	RH5041
33			
32			
31			
30			
29			
28			
27	2	Screw T.C.C.E. 10/32 UNF 1/4	VT0015
26	2	Screw T.C.C.E. M3x25 UNI 5931	VT0022
25	2	Screw T.C.C.E. M5x70 UNI 5931	VT0059
24	2	Spacer for filtr (use ø9,52x5 piece of pipe)	SS0952
23	2	Screw T.C.C.E. M5x65 UNI 5931	VT0061
22	8	Washer ø5x10 UNI 6592	RN0031
21			
20	Mt16	Pipe ø6x1 POLY-FLO orange	MP0034
19	2	Male plug 2611-5M (complete with seal)	PN0130
18	4	Straight pneumatic union 6-M5	PN0036
17			
16			
15	1	Elbow pneumatic union 6-1/4	3PN6504
14	2	Elbow pneumatic union 6-1/8	3PN6508
13	2	Swivel connection 1610-6/4-1/4	PN0136
12	3	Pneumatic union Tee 6-1/4	3PN6014
11	1	Nipple 2500-1/4	PN0132
10	1	Plate for flowmeter (see gas-panel assembly carpentry)	
9	1	N2 FLOWMETER 50SLM	VA0009
8	1	6-WAY DISTRIDUTION FRAME	RH4832P5
7	2	FLOW REGULATOR MCU-706-1/4	PN0159
6	2	COIL 24VDC MSFG-24-OD	PN0164
5	2	3-WAY VALVE MFH-3-1/4	PN0163
4	1	PRESSURE SWITCH PMN-10-NA	PN0161
3	1	PRESSURE GAUGE MO40R-Ø40-1/8-0÷10 bar (0÷140 PSI)	MN0112
2	1	PRESSURE REGULATOR C1104-R-00	RG0006
1	1	FILTER C104-F-00	PN0030

Measure without indication of tollerance	Treatment	Material	
Prepared by: Alfredo Zamboni	Checked by: V. Ogliari	Title: COMPRESSED AIR INLET DISTRIBUTION REACTOR PE 2061S	Sheet: 1/2
Original date: 23/10/2002	Checked by		Scale: 1:2
LPE SpA Powering the future	Approved by: D. Crippa	Order No / Dwg No: RH5040U2	Section / Group: G
	Latest rev: 06	CONFIDENTIAL	

This document and data disclosed herein is not to be reproduced used or disclosed in whole or in part to anyone without the permission of LPE S.p.A.

Modification description	Date	Prepared by
Rev.06 – Sostituzione raccordi sul foglio 2	29/11/2010	A. Zamboni

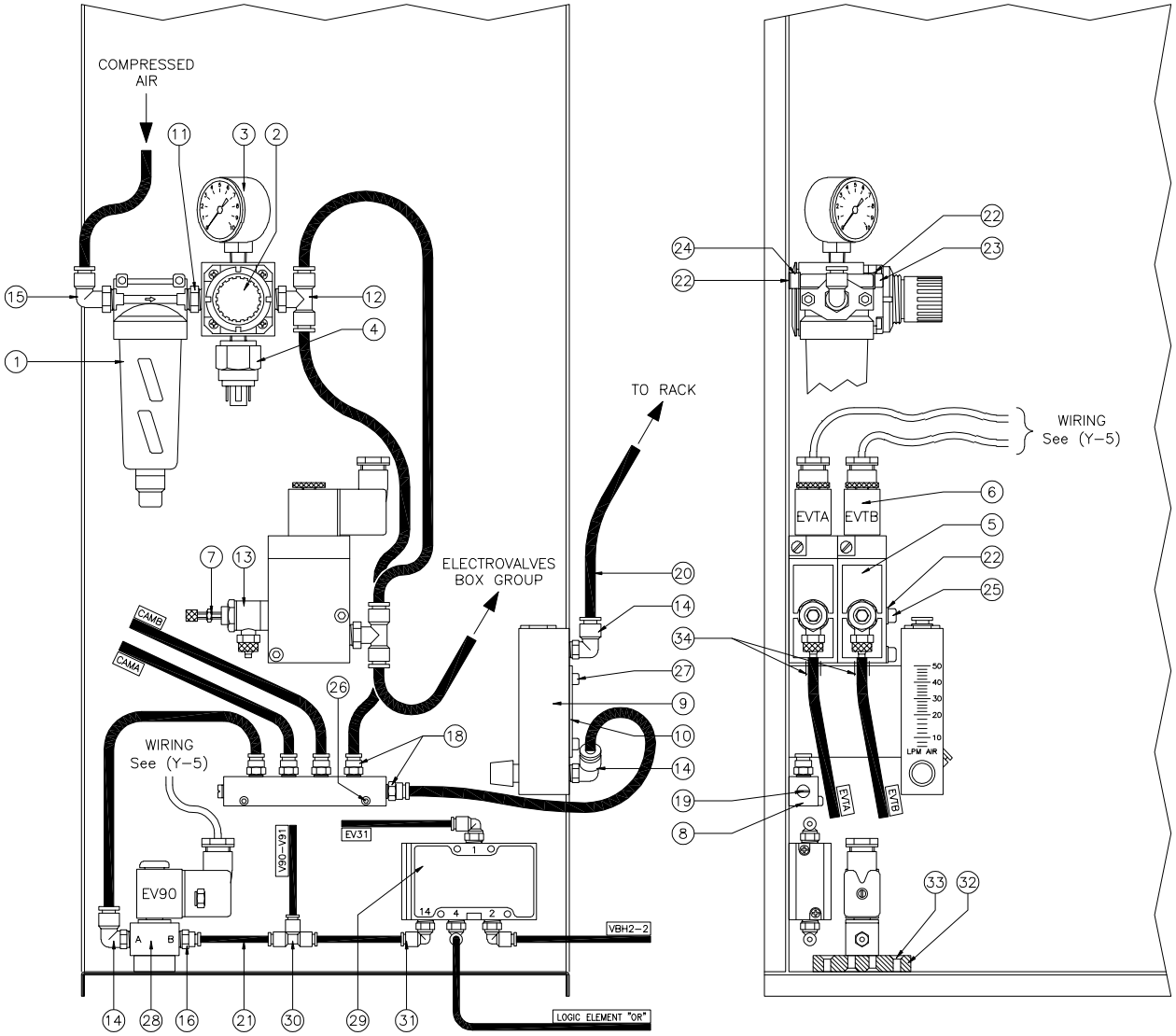

VERSION WITH SWITCHING ON THE SILICON LINES

Item	Qty	Description	Code
34	2	SPOLILER RESTRICTION (INSIDE THE PIPE)	RH5041
33	4	Screw S.P.E.I. M4x16 UNI 5933	PN0036
32	1	Plate for solenoid valve	RH4849P1
31	4	Elbow pneumatic fast connection 4-1/8	3PN4145
30	1	Tee pneumatic fast connection union ø4	3PN4204
29	1	5/2-WAY VALVE VL-5-1/8-B	3VA0180
28	1	SOLENOID VALVE Mod. A331-1C2-A73 (24VDC)	PN0011
27	2	Screw T.C.C.E. 10/32 UNF 1/4	VT0015
26	2	Screw T.C.C.E. M3x25 UNI 5931	VT0022
25	2	Screw T.C.C.E. M5x70 UNI 5931	VT0059
24	2	Spacer for filtr (use ø9,52x5 piece of pipe)	SS0952
23	2	Screw T.C.C.E. M5x65 UNI 5931	VT0061
22	8	Washer ø5x10 UNI 6592	RN0031
21	Mt.3	Blue pipe ø4 poliurethane	3MP0203
20	Mt16	Pipe ø6x1 POLY-FLO orange	MP0034
19	1	Male plug 2611-5M (complete with seal)	PN0130
18	5	Straight pneumatic union 6-M5	PN0036
17			
16	1	Straight pneumatic fast connection 4-1/8	3PN4081
15	1	Elbow pneumatic union 6-1/4	3PN6504
14	3	Elbow pneumatic union 6-1/8	3PN6508
13	2	Swivel connection 1610-6/4-1/4	PN0136
12	3	Pneumatic union Tee 6-1/4	3PN6014
11	1	Nipple 2500-1/4	PN0132
10	1	Plate for flowmeter (see gas-panel assembly carpentry)	
9	1	N2 FLOWMETER 50SLM	VA0009
8	1	6-WAY DISTRIDUTION FRAME	RH4832P5
7	2	FLOW REGULATOR MCU-706-1/4	PN0159
6	2	COIL 24VDC MSFG-24-OD	PN0164
5	2	3/2-WAY VALVE MFH-3-1/4	PN0163
4	1	PRESSURE SWITCH PMN-10-NA	PN0161
3	1	PRESSURE GAUGE MO40R-Ø40-1/8-0÷10 bar (0÷140 PSI)	MN0112
2	1	PRESSURE REGULATOR C1104-R-00	RG0006
1	1	FILTER C104-F-00	PN0030

Measure without indication of tollerance	Treatment	Material	
Prepared by: Alfredo Zamboni	Checked by: V. Ogliari	Title: COMPRESSED AIR INLET DISTRIBUTION REACTOR PE 2061S	Sheet: 2/2
Original date: 23/10/2002	Checked by		Scale: 1:2
LPE S.p.A. Powering the future	Approved by: D. Crippa	Order No / Dwg No: RH5040U2	Section / Group: G
	Latest rev: 06	CONFIDENTIAL	

This document and data disclosed herein is not to be reproduced used or disclosed in whole or in part to anyone without the permission of LPE S.p.A.

Modification description	Date	Prepared by
Rev.06 – Sostituzione raccordi sul foglio 2	29/11/2010	A. Zamboni

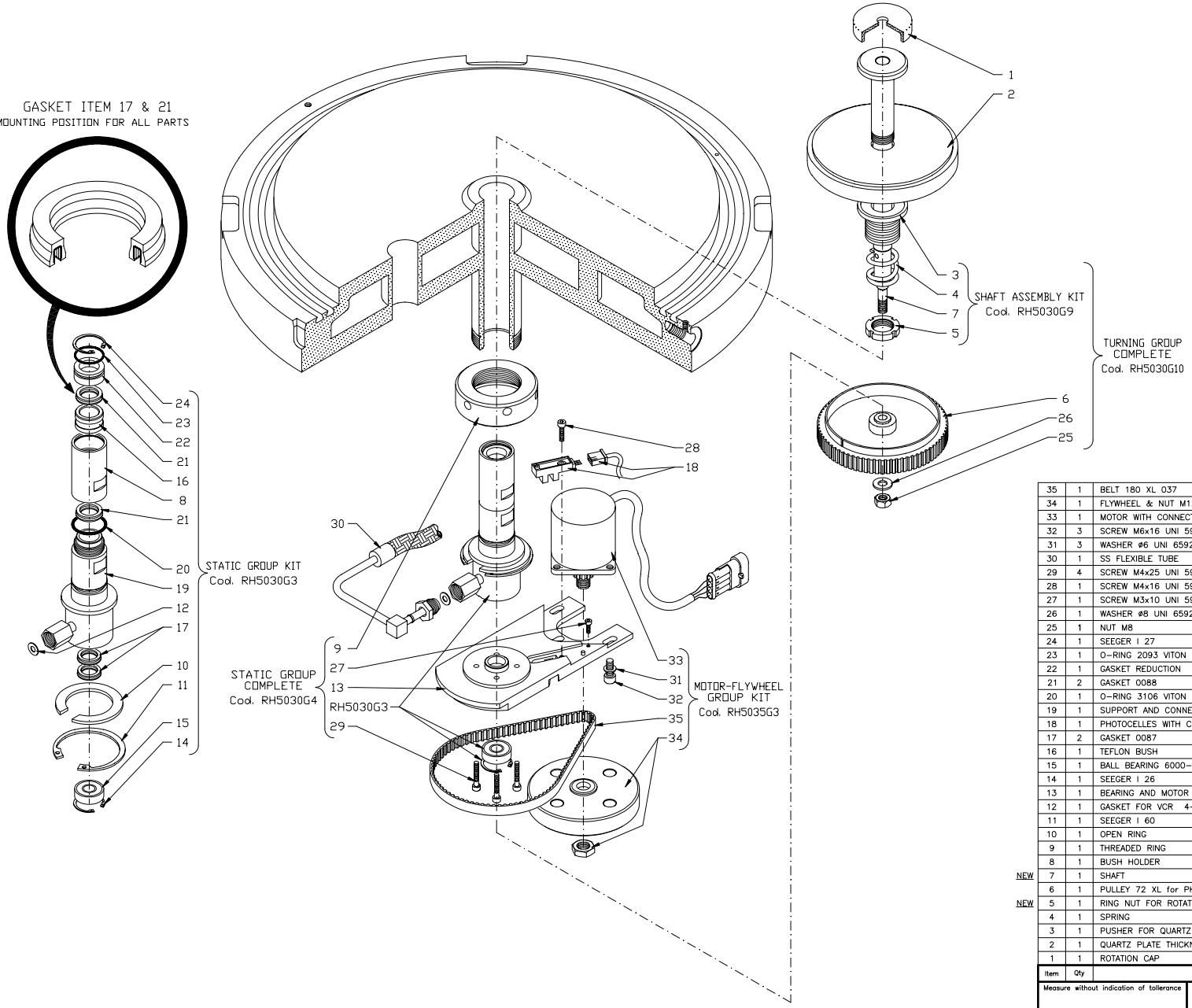

	Item	Qty	Description	Code
	35	1	BELT 180 XL 037	CC0004
	34	1	FLYWHEEL & NUT M12x1	RH5035G2
	33	1	MOTOR WITH CONNECTOR AND PULLEY	RH5035G1
	32	3	SCREW M6x16 UNI 5931	VT0036
	31	3	WASHER ø6 UNI 6592	RN0033
	30	1	SS FLEXIBLE TUBE	RH4855P1
	29	4	SCREW M4x25 UNI 5931	VT0012
	28	1	SCREW M4x16 UNI 5931	VT0044
	27	1	SCREW M3x10 UNI 5931	VT0020
	26	1	WASHER ø8 UNI 6592	RN0034
	25	1	NUT M8	DA0008
	24	1	SEEGER I 27	CG0127
	23	1	O-RING 2093 VITON (or 2-021 Parker)	GU0209
	22	1	GASKET REDUCTION	RH5031P6
	21	2	GASKET 0088	GU0088
	20	1	O-RING 3106 VITON (or 2-121 Parker)	GU0310
	19	1	SUPPORT AND CONNECTOR (VCR)	RH5031P2
	18	1	PHOTOCELLES WITH CONNECTOR OS3701	OE3701
	17	2	GASKET 0087	GU0087
	16	1	TEFLON BUSH	RH5031P9
	15	1	BALL BEARING 6000-2RS	CU0060
	14	1	SEEGER I 26	CG0126
	13	1	BEARING AND MOTOR SUPPORT	RH5031P1
	12	1	GASKET FOR VCR 4-VCR-2	RA0045
	11	1	SEEGER I 60	CG0032
	10	1	OPEN RING	RH5031P7
	9	1	THREADED RING	RH5031P8
	8	1	BUSH HOLDER	RH5031P4
NEW	7	1	SHAFT	RH5033P14
	6	1	PULLEY 72 XL for PHOTOCELLES	RH5033P5
NEW	5	1	RING NUT FOR ROTATION SHAFT	RH5033P15
	4	1	SPRING	RH5033P3
	3	1	PUSHER FOR QUARTZ PLATE THICKN. 18 mm	RH5033P2
	2	1	QUARTZ PLATE THICKNESS 18 mm	See (V-9)
	1	1	ROTATION CAP	See (V-20)

Measure without indication of tollerance | Treatment | Material

Prepared by: Alfredo Zamboni	Checked by: V. Ogliari	Title: REACTOR PE 2061S — TURN PLATE & MOTOR-FLYWHEEL GROUP	Sheet: 1/1
Original date: 15/12/1998	Checked by:		Scale: 1:2.5
LPE Powering the future	Approved by: D. Crippa	Order No:	Dwg No: RH5030U1
	Latest rev: 04	Section:	Group: H

CONFIDENTIAL — This document and data disclosed herein is not to be reproduced used or disclosed in whole or in part to anyone without the permission of LPE S.p.A.

Modification description	Date	Prepared by
Rev.04: Sostituiti pos. 5 (era RH5033P12) e pos. 7 (era RH5033P13)	25/06/08	M.Borghi

A2

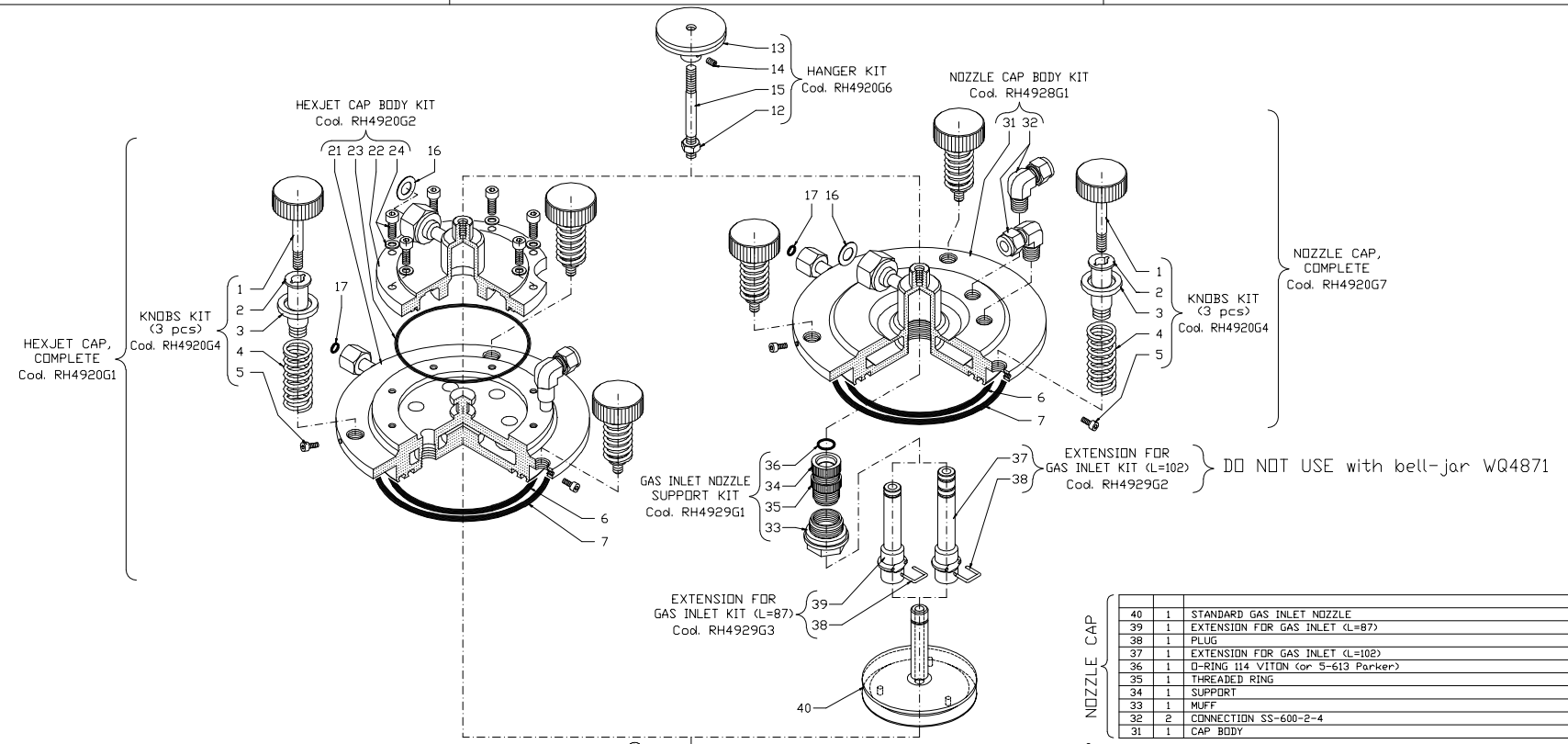

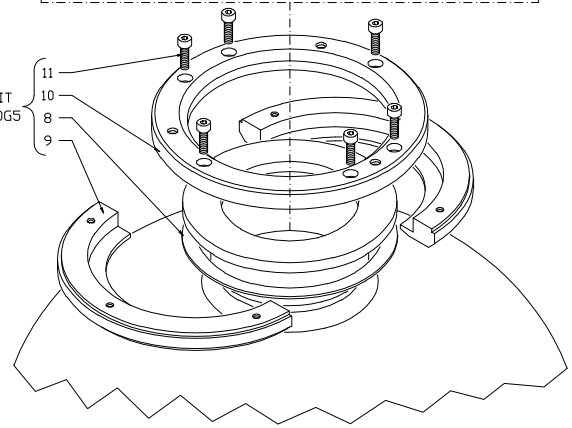

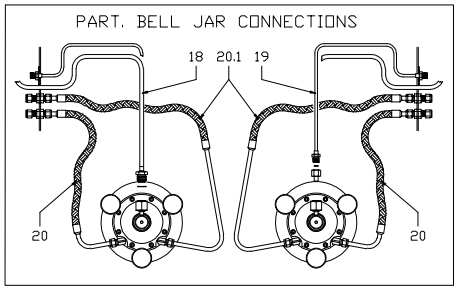

	Item	Qty	Description	Code
NOZZLE CAP	40	1	STANDARD GAS INLET NOZZLE	See (V-15)
	39	1	EXTENSION FOR GAS INLET (L=87)	
	38	1	PLUG	RH4929P5
	37	1	EXTENSION FOR GAS INLET (L=102)	
	36	1	O-RING 114 VITON (or 5-613 Parker)	GU0178
	35	1	THREADED RING	
	34	1	SUPPORT	
	33	1	MUFF	
	32	2	CONNECTION SS-600-2-4	RA0002
	31	1	CAP BODY	RH4928
HEXJET CAP	24	8	SCREW M6x20 UNI 5931 + WASHER ø6	
	23	1	O-RING 3400 VITON (or 2-155 Parker)	GU3400
	22	1	UPPER CAP BODY	
	21	1	LOWER CAP BODY	
COMMON	20.1	2	TOP BELL FLEXIBLE HOSE (st.st.)	RH4853H19
	20	2	TOP BELL FLEXIBLE HOSE (st.st.)	RH4853H3
	19	2	VACUUM TUBE (st.st.)	RH4856P4
	18	2	GAS INLET TUBE	RH4856P3
	17	1	O-RING 2025 VITON (or 2-010 Parker)	GU0068
	16	1	GASKET FOR VCR 8-VCR-4	RA0049
	15	1	THREADED M8x100 (st.st.)	
	14	1	GRUB SCREW M5x6 UNI 5923	
	13	1	HANGER	
	12	1	NUT M10 EN 24032	
	11	6	SCREW M6x20 UNI 5931	
	10	1	RING	
	9	1	HALF RING	
	8	1	TEFLON RING GASKET	RH4925P2
	7	1	O-RING 208 VITON (or 2-354 Parker)	GU0208
	6	1	O-RING 6425 VITON (or 2-347 Parker)	GU0052
	5	3	SCREW M4x10 UNI 5931	
	4	3	SPRING	RH4926P4
	3	3	BACK RING	
	2	3	SLIDE	
	1	3	KNOB	RH4926P1

Measure without indication of tollerance	Treatment: VEDI DISEGNO	Material: VEDI DISEGNO	
Prepared by: Alfredo Zamboni	Checked by: V. Ogliari	Title: BELL JAR CAP GROUPS REACTOR PE 2061S	Sheet: 1/ 1
Original date: 06/02/2004	Checked by:		Scale: A2
LPE Powering the future	Approved by: D. Crippa	Order No:	Dwg No: RH4920U
	Latest rev: 04	Section:	Group: I

CONFIDENTIAL — This document and data disclosed herein is not to be reproduced used or disclosed in whole or in part to anyone without the permission of LPE S.p.A.

Modification description	Date	Prepared by
Rev.04: Removed parts 25. 26. 27	29/05/2015	S.Preti

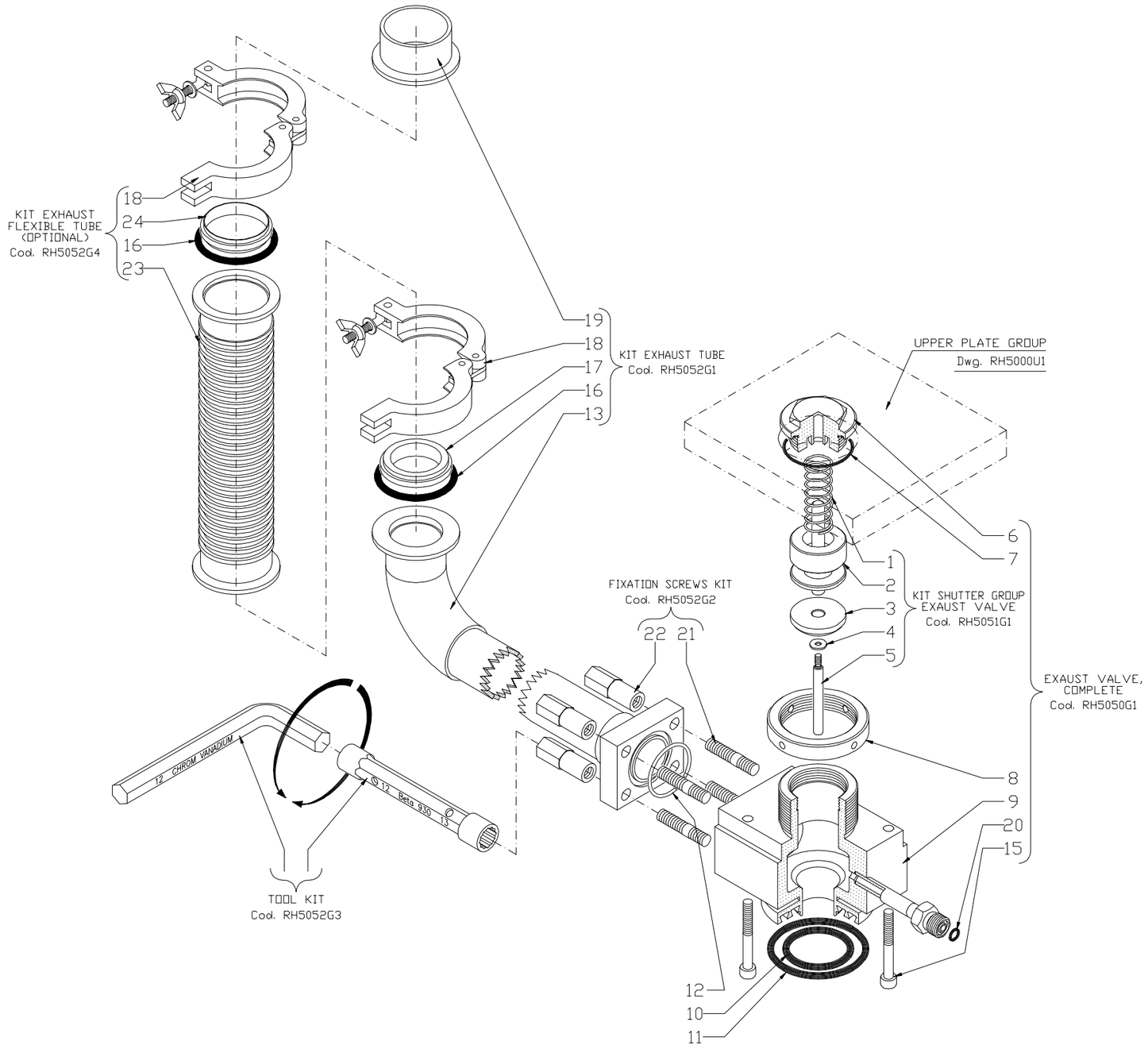

Item	Qty	Description	Code
24	1	CENTERING RING DN40	RA0004
23	1	EXHAUST FLEXIBLE TUBE DN40 L=750mm	RA0080
22	4	HOLLOWED SCREW	RH5052P3
21	4	STUD BOLT UNI 5911-M8 (STUD 28mm - FAST END 12mm)	VT2510
20	1	O-RING 2025 VITON (or 2-010 Parker)	GU0068
19	1	FLINGE DN40	RA0075
18	1+1	CLAMPING RING DN32/40	RA0077
17	1	REDUCING CENTERING RING DN32/40	RA0076
16	1+1	O-RING VITON (5-330 Parker)	GU0330
15	4	SCREW M6x50 UNI 5931	VT0040
14			
13	1	EXHAUST TUBE 1" & FLINGE	RH5052P1
12	1	METAL O-RING	GU0110
11	1	O-RING 6212 VITON-55Sh-(or 2-330 Parker)	GU1330
10	1	O-RING 6150 VITON-55Sh-(or 2-325 Parker)	GU0740
9	1	BODY, VCO CONNECTION	RH5050P1
8	1	THREADED RING	RH5051P7
7	1	O-RING 2162 VITON (or 2-030 Parker)	GU0010
6	1	CAP	RH5051P1
5	1	STUD BOLT	RH5051P4
4	1	WASHER	RH5051P6
3	1	GRAPHITE SHUTTER	RH5051P5
2	1	SHUTTER BODY	RH5051P3
1	1	SPRING	RH5051P2

Measure without indication of tollerance	Treatment	Material

Prepared by	Checked by	Title	Sheet
Alfredo Zamboni	V. Ogliari	EXHAUST VALVE GROUP	1/ 1
Original date 12/04/2002	Checked by N. Speciale	REACTORS PE1061 – PE2061 – PE2061S	Scale A2
LPE SpA Powering the future	Approved by D. Crippa	Order No / Dwg No RH5050U1 / Section / Group L	
	Latest rev 05	CONFIDENTIAL	This document and data disclosed herein is not to be reproduced used or disclosed in whole or in part to anyone without the permission of LPE S.p.A.

Modification description	Date	Prepared by
Rev.05 – General update	24/06/2010	A. Zamboni

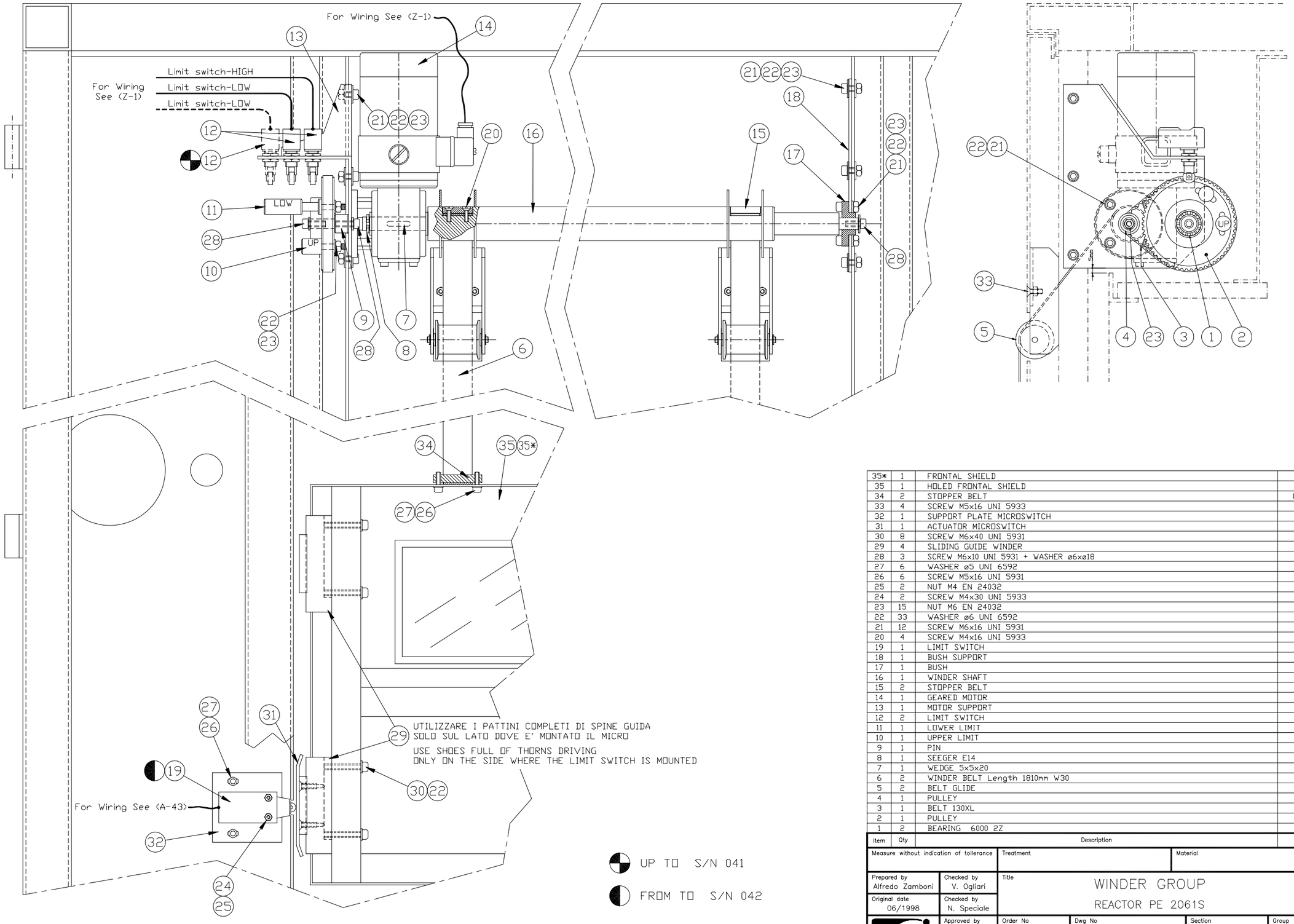

Rev.01 – General update	25/06/2010	A. Zamboni
Modification description	Date	Prepared by

Item	Qty	Description	Code
35*	1	FRONTAL SHIELD	RH4824G2
35	1	HOLED FRONTAL SHIELD	RH4824G1
34	2	STOPPER BELT	RH4665P11
33	4	SCREW M5x16 UNI 5933	VT0231
32	1	SUPPORT PLATE MICROSWITCH	RH4664P4
31	1	ACTUATOR MICROSWITCH	RH4662P5
30	8	SCREW M6x40 UNI 5931	VT0004
29	4	SLIDING GUIDE WINDER	RH4662G0
28	3	SCREW M6x10 UNI 5931 + WASHER ø6xø18	VT0014
27	6	WASHER ø5 UNI 6592	RN0031
26	6	SCREW M5x16 UNI 5931	VT0030
25	2	NUT M4 EN 24032	DA0004
24	2	SCREW M4x30 UNI 5933	VT0235
23	15	NUT M6 EN 24032	DA0006
22	33	WASHER ø6 UNI 6592	RN0033
21	12	SCREW M6x16 UNI 5931	VT0036
20	4	SCREW M4x16 UNI 5933	VT0216
19	1	LIMIT SWITCH	IN1132
18	1	BUSH SUPPORT	RH4664P2
17	1	BUSH	RH4665P3
16	1	WINDER SHAFT	RH4665P4
15	2	STOPPER BELT	RH4665P5
14	1	GEARED MOTOR	MV0144
13	1	MOTOR SUPPORT	RH4664P1
12	2	LIMIT SWITCH	IN0077
11	1	LOWER LIMIT	RH4665P7
10	1	UPPER LIMIT	RH4665P6
9	1	PIN	RH4665P8
8	1	SEEGER E14	CG0014
7	1	WEDGE 5x5x20	CG0029
6	2	WINDER BELT Length 1810mm W30	CC0018
5	2	BELT GLIDE	RH4666G1
4	1	PULLEY	RH4665P2
3	1	BELT 130XL	CC0040
2	1	PULLEY	RH4665P1
1	2	BEARING 6000 2Z	CU0060

Measure without indication of tollerance | Treatment | Material

Prepared by: Alfredo Zamboni | Checked by: V. Ogliari | Original date: 06/1998 | Checked by: N. Speciale | Approved by: D. Crippa | Latest rev: 01

Title: WINDER GROUP
REACTOR PE 2061S

Sheet: 1/ 1 | Scale: A2

Order No | Dwg No: RH4666U1 | Section | Group: M

LPE SpA Powering the future

CONFIDENTIAL

This document and data disclosed herein is not to be reproduced used or disclosed in whole or in part to anyone without the permission of LPE S.p.A.

LEFT VIEW

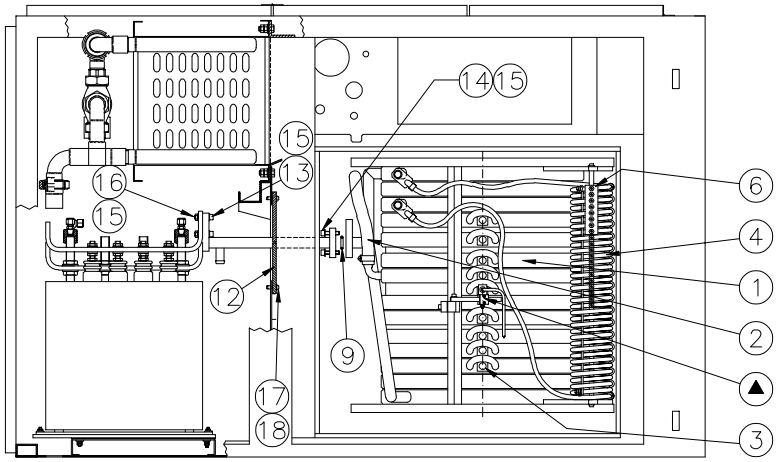

BACK VIEW

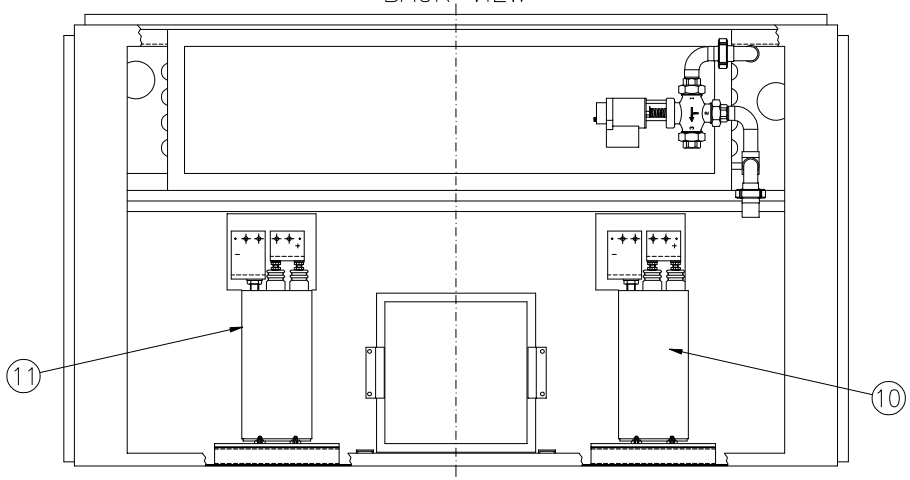

TOP VIEW

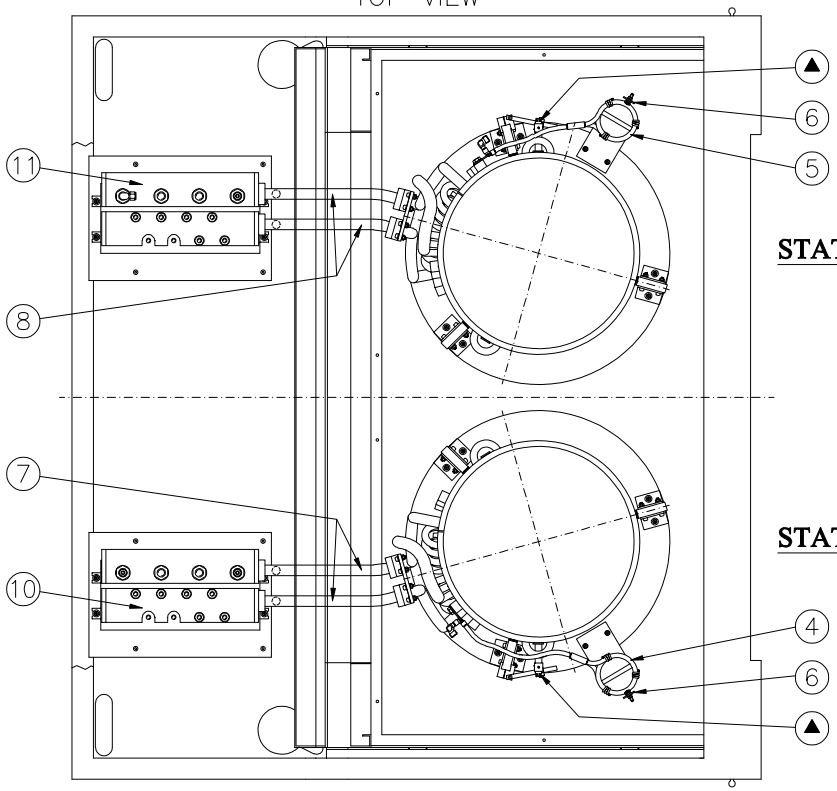

STATION B

STATION A

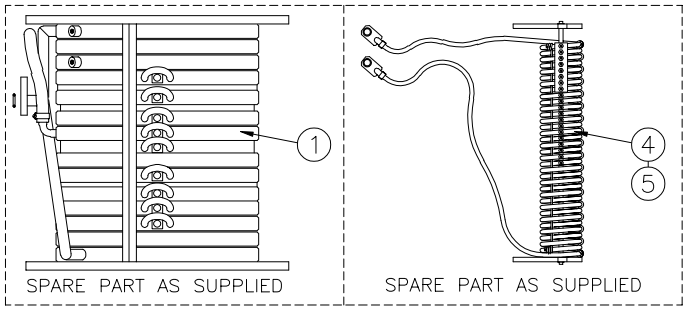

SPARE PART AS SUPPLIED

SPARE PART AS SUPPLIED

Item	Qty	Description	Code
▲	1+1	PYROMETER & OPTICAL FIBER GROUP	See RH5087U1
18	16	WASHER Ø5 UNI 6593 INOX	RN0009
17	16	SCREW M5x20 UNI 5931 INOX	VT0031
16	16	NUT M8 UNI 5588 INOX	DA0008
15	48	WASHER Ø8 UNI 6592 INOX	RN0034
14	16	SCREW M8x30 UNI 5931 INOX	VT0618
13	16	SCREW M8x35 UNI 5931 INOX	VT0619
12	2	HALF DIVIDED PLATE	RH5086P7
11	1	STATION B CAPACITOR ASSEMBLY	RH5086SB
10	1	STATION A CAPACITOR ASSEMBLY	RH5086SA
9	2+2	O-RING 3075 VITON (or 2-116 Parker)	GU0067
8	1	COUPLING TUBES FOR POWER/WATER (Station B)	RH5086GB
7	1	COUPLING TUBES FOR POWER/WATER (Station A)	RH5086GA
6	3+3	SHORT CYRCUIT COPPER PLATE	RH5084P8
5	1	PROFILING COIL 16" (Station B)	RH5084GB
4	1	PROFILING COIL 16" (Station A)	RH5084GA
3	18+18	QUARTZ WINDOWS	RH5083P5
2	1+1	RUBBER TUBE WATER BY PASS ø18xø28 L=620mm	RH5083P6
1	1+1	INDUCTION COIL 16" (BRIGHTENED)	RH5082L
		INDUCTION COIL 16" (GOLD PLATED)	RH5082D

Modification description	Date	Prepared by
Rev.02: replaced RH5086G1/P2/P3/P5 with RH5086SA/SB/P7+screws	25/10/2013	Sis.ma

Measure without indication of tollerance | Treatment | Material

Prepared by: Alfredo Zamboni | Checked by: V. Ogliari | Original date: 21/07/1998 | Checked by:

Title: INDUCTION COIL 16" & MF CAPACITOR GROUP REACTOR PE 2061S

Sheet: 1/1 | Scale: A2

Approved by: D. Crippa | Latest rev: 02 | Order No | Dwg No: RH5081U1 | Section | Group: N

LPE S.p.A. Powering the future

CONFIDENTIAL

This document and data disclosed herein is not to be reproduced used or disclosed in whole or in part to anyone without the permission of LPE S.p.A.

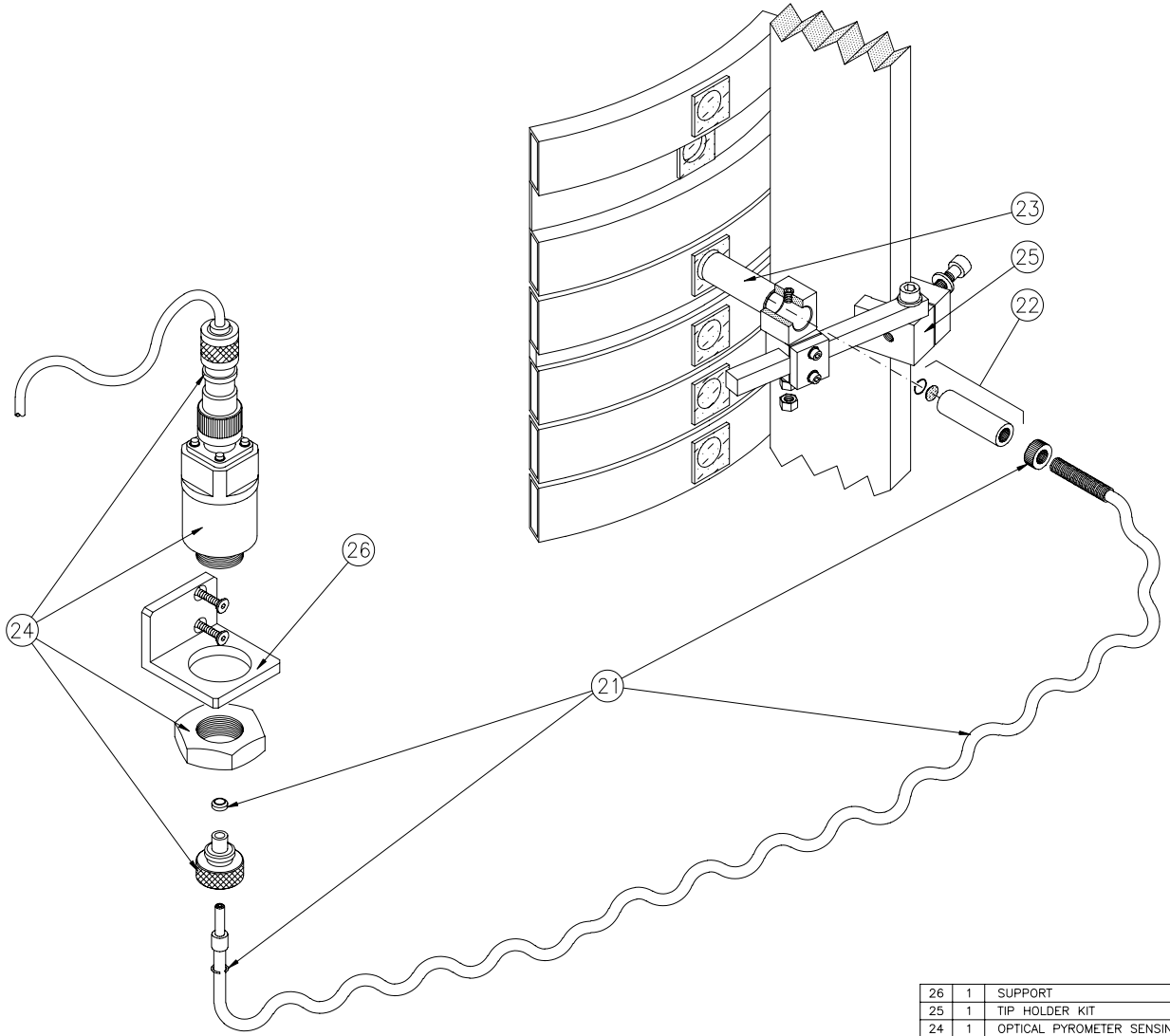

Item	Qty	Description	Code
26	1	SUPPORT	RH4822P10
25	1	TIP HOLDER KIT	RH5087G3
24	1	OPTICAL PYROMETER SENSING HEAD WITH CONNECTOR	OE0003
23	1	TEFLON EXTENSION TUBE	RH5087P8
22	1	PYROMETER LENS TIP	RH5087G2
21	1	OPTICAL FIBER KIT (length 2000 mm)	RH5087G4

Measure without indication of tollerance | Treatment | Material

Prepared by: Alfredo Zamboni | Checked by: V. Ogliari | Title: PYROMETER & OPTICAL FIBER GROUP REACTOR PE 2061S | Sheet: 1/ 1

Original date: 27/06/2002 | Checked by: N. Speciale | Scale: 1:2

Approved by: D. Crippa | Order No: Da S/N 59 | Dwg No: RH5087U1 | Section: | Group: N

Latest rev: 02

LPE Powering the future

CONFIDENTIAL — This document and data disclosed herein is not to be reproduced used or disclosed in whole or in part to anyone without the permission of LPE S.p.A.

Modification description	Date	Prepared by
Aggiunto item 21.2	07/03/2007	A. Zamboni

A2

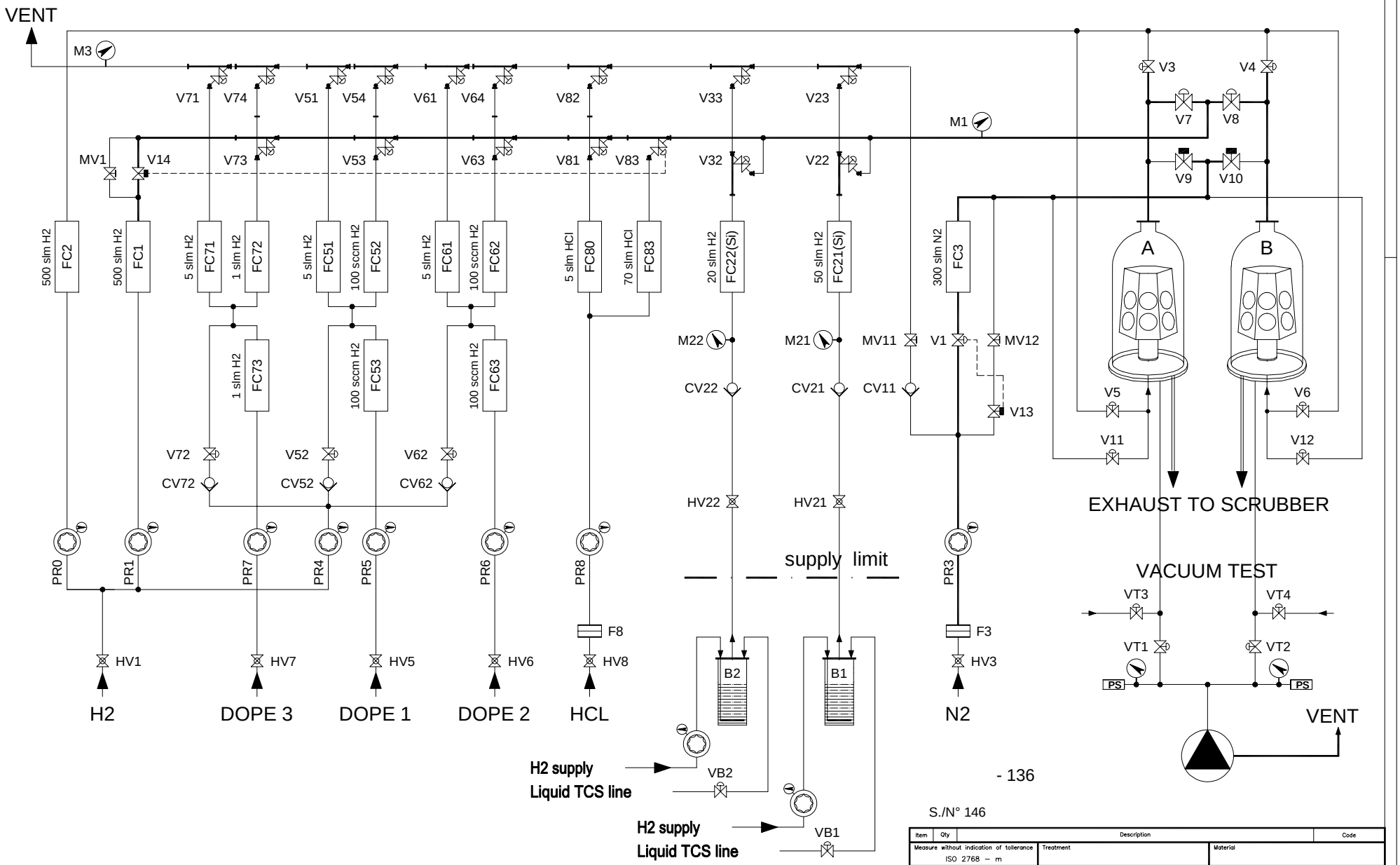

- 136

S./N° 146

Item	Qty	Description	Code
Measure without indication of tollerance ISO 2768 – m		Treatment	Material
Prepared by Laura Gobbo	Checked by V.O.	Title GAS PANEL SCHEME PE2061S	Sheet 1/ 1
Original date 15/06/2015	Checked by		Scale 1:1
LPE Powering the future	Approved by D.C.	Order No / Dwg No RH5145U1–146	Section / Group
	Latest rev 00	CONFIDENTIAL	This document and data disclosed herein is not to be reproduced used or disclosed in whole or in part to anyone without the permission of LPE S.p.A.

Modification description	Date	Prepared by

A2

CONF.		ITEM	Q.TY	DESCRIPTION	CODE
X	BASIC	F3	1	filter H2/N2	FG0238
		F8	1	filter HCL	FG0239
		M1 - M3 - M21	3	pressure gauge -30/+100 psi	MN0102
		PR4 - PR5 - PR8	3	pressure regulator (64-2662-KA421)	RG0047
		PR0 - PR1 - PR3	3	pressure regulator (64-2662-KA491-055)	RG0048
		on pressure regulator	5	pressure gauge -30/+100 psi	MN0102
		HV1 - HV3	2	valve manual H2/N2 inlet	VA0111
		HV5 - HV8 - HV21	3	valve manual 1/4 turn	VA0020
		FC1 - FC2	2	flowcontroller 500 slm H2	VA0201
		FC3	1	flowcontroller 300 slm N2	VA0200
		FC80 - gas etch.	1	flowcontroller 5 slm HCl	3VA0160
		FC83 - susceptor etch.	1	flowcontroller 70 slm HCl	3VA0166
		FC51	1	flowcontroller 5 slm H2	3VA0164
		FC52 - FC53	2	flowcontroller 100 sccm H2	3VA0162
		FC21 (Si)	1	flowcontroller 50 slm H2	3VA0168/141
		V1 - V7 - V8	3	valve N2 MAIN - n.c.	VA0112
		V9 - V10	2	valve H2 MAIN - n.o.	VA0113
		V13 - V14	2	valve 2 ways	VA0506
		V22 - V23 - V51 - V54 - V82 - V83	6	valve 3 ways	VA0507
		V53 - V81	2	valve 4 ways	VA0510
		V3-V4-V5-V6-V11-V12-V52	7	valve 2 ways	VA0505
		MV1- MV11 - MV12	3	valve metering	VA0606
		CV21 - CV52 - CV11	3	check valve	VA0644
X	2° DOPE	PR6	1	pressure regulator (64-2662-KA421)	RG0047
		on pressure regulator	1	pressure gauge -30/+100 psi	MN0102
		HV6	1	valve manual 1/4 turn	VA0020
		FC61	1	flowcontroller 5 slm H2	3VA0164
		FC62 - FC63	2	flowcontroller 100 sccm H2	3VA0162
		V61 - V64	2	valve 3 ways	VA0507
		V63	1	valve 4 ways	VA0510
		V62	1	valve 2 ways	VA0505
		CV62	1	check valve	VA0644
X	3° DOPE	PR7	1	pressure regulator (64-2662-KA421)	RG0047
		on pressure regulator	1	pressure gauge -30/+100 psi	MN0102
		HV7	1	valve manual 1/4 turn	VA0020
		FC71	1	flowcontroller 5 slm H2	3VA0164
		FC72 - FC73	2	flowcontroller 1 slm H2	3VA0163
		V71 - V74	2	valve 3 ways	VA0507
		V73	1	valve 4 ways	VA0510
		V72	1	valve 2 ways	VA0505
		CV72	1	check valve	VA0644
X	2° SOURCE	FC22 - Si2	1	flowcontroller 20 slm H2	3VA0161/062
		M22	1	pressure gauge -30/+30 PSI 1/4" VCR	MN0101
		V32 - V33	2	valve 3 ways	3VA0502
		HV22	1	valve manual 1/4 turn	VA0020
		CV22	1	check valve	VA0644
X	VT	VT1 - VT2	2	see drw. RH5090U1 - group S	\\
		VT3 - VT4	2	see drw. RH5090U1 - group S	\\
	OPT				

REACTOR s/n 146	RE: dwg RH5145U1		Date June 2015
LPE Powering the future	PE2061S - GAS METERING	Group P	Page list

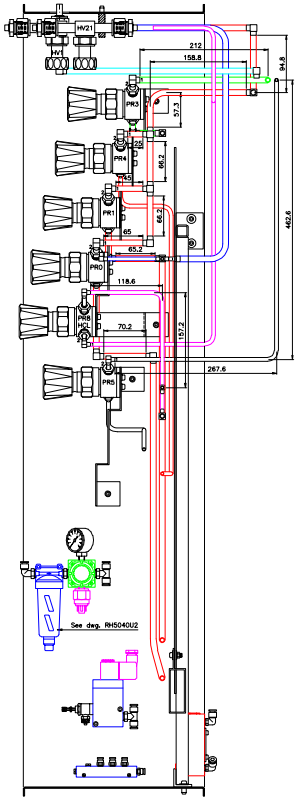

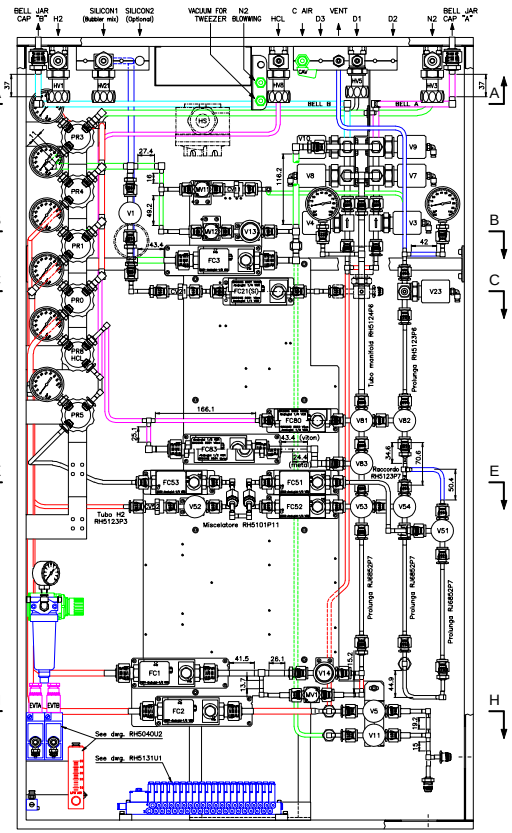

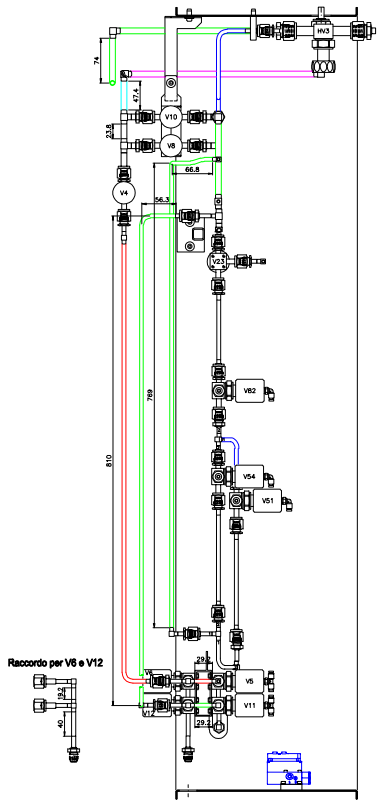

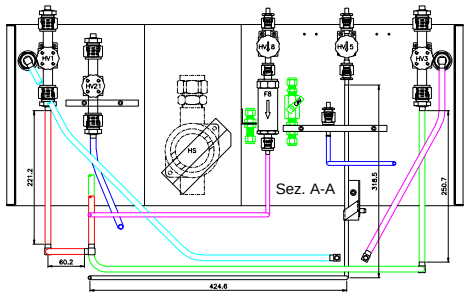

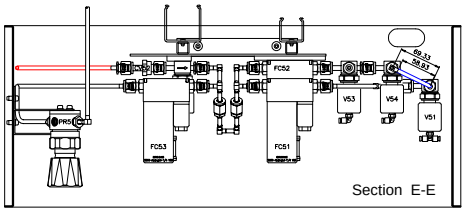

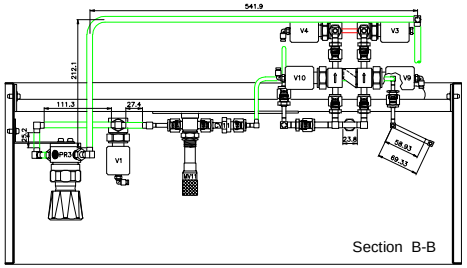

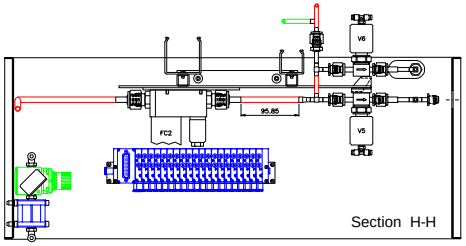

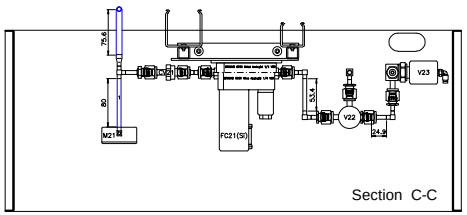

Mt. 6,00	Tube ø9,52x0,9		SS0952
Mt.10,00	Tube ø6,35x0,9		SS0019
2 pieces	Reducing union 6LV-6MW-6-4	SWAGELOK	RA5013
3 pieces	Reducing tee 6LV-6MW-3-6-4	SWAGELOK	RA5012
2 pieces	Reducing elbow 6LV-6MW-9-4	SWAGELOK	RA5014
10 pieces	Union tee 6LV-6MW-3	SWAGELOK	RA5011
25 pieces	90° union elbow 6LV-6MW-9	SWAGELOK	RA5016
13 pieces	Union tee 6LV-4MW-3	SWAGELOK	RA5010
19 pieces	90° union elbow 6LV-4MW-9	SWAGELOK	RA5015
16 pieces	Gasket 3/8 NI-8-VCR-2	SWAGELOK	RA0050
8 pieces	Male nut SS-8-VCR-4	SWAGELOK	RA0059
10 pieces	Female nut SS-8-VCR-1	SWAGELOK	RA0055
10 pieces	Gland 6LV-8-VCR-3S-6TB7	SWAGELOK	RA5021
8 pieces	Long gland 6LV-8-VCR-3-6TB2	SWAGELOK	RA0057
18 pieces	Gasket 1/4 "H" NI-4-VCR-2-ZC-VS	SWAGELOK	RA5017
20 pieces	Male nut "H" SS-4-HVCR-4SR	SWAGELOK	RA5009
4 pieces	Female nut "H" SS-4-HVCR-1SR	SWAGELOK	RA5005
24 pieces	Gland "H" 6LV-4-HVCR-3-1.19SR	SWAGELOK	RA5008
76 pieces	Gasket 1/4 NI-4-VCR-2	SWAGELOK	RA0047
15 pieces	Short male nut SS-4-VCR-4-.54NC	SWAGELOK	RA0104
15 pieces	Male nut SS-4-VCR-4	SWAGELOK	RA0104L
24 pieces	Female nut SS-4-VCR-1	SWAGELOK	RA0033
16 pieces	Short gland 6LV-4-VCR-3S-4TB2	SWAGELOK	RA5006
23 pieces	Gland 316L-4-VCR-3AS	SWAGELOK	RA0102
15 pieces	Long gland 316L-4-VCR-3A	SWAGELOK	RA0103
1 piece	Connecting	L.P.E.	RH5123P7
1 piece	Mixer	L.P.E.	RH5101P11
3 pieces	Extension (L=185,5) Optional DOPE 1	L.P.E.	RJ6852P7
1 piece	Tube H2 (dope 1) Optional DOPE 1	L.P.E.	RH5123P3
1 piece	Extension (L=141,8) Optional SILICON 1	L.P.E.	RH5123P6
1 piece	Tube manifold (single line silicon) Optional SILICON 1	L.P.E.	RH5124P6
MV1–MV11–MV12	Valv metering SS-4BMG-VCR (alternatively)	SWAGELOK	VA0607
	Valv metering SS-4BMW-VCR		VA0606
CV11–CV21–CV52	Check valve 6L-CW4FR4-VR4	SWAGELOK	VA0644
V53–V61	Valve 4-ways N.C. 6LVV-DP-D-2332-P1-C	SWAGELOK	VA0510
V22-V23-V51-V54-V62-V63	Valve 3-ways N.C. 6LVV-DP-C- 233-P1-C	SWAGELOK	VA0507
V13–V14	Valve 2-ways N.O. 6LVV-DP-FR4MR4-P1-O	SWAGELOK	VA0506
V3-V4-V5-V6-V11-V12-V52	Valve 2-ways N.C. 6LVV-DP-FR4MR4-P1-C	SWAGELOK	VA0505
V9 –V10	Valve 2-ways N.O. 6LV -DF-HFR4-O	SWAGELOK	VA0113
V1 –V7 –V8	Valve 2-ways N.C. 6LV -DF-HFR4-C	SWAGELOK	VA0112
FC83	MFC 5851EME Metal 1/2VCRM 70 SLM-HCL-D Conn.15 pin (alternatively)	BROOKS	3VAME0340
	MFC 5851E Viton 1/2VCRM 70 SLM-HCL-D Connector 15 pin		3VA0166
FC80	MFC 5850EME Metal 1/4VCRM 5 SLM-HCL-D Conn.15 pin (alternatively)	BROOKS	3VAME0310
	MFC 5850E Viton 1/4VCRM 5 SLM-HCL-D Connector 15 pin		3VA0160
FC21(SI)	MFC 5851EME Metal 1/4VCRM 50 SLM- H2-D Conn.15 pin (alternatively)	BROOKS	3VAMED330/141
	MFC 5851E Viton 1/4VCRM 50 SLM- H2-D Connector 15 pin		3VA0168/141
FC52–FC53	MFC 5850E Viton 1/4VCRM 100SCCM-H2-D Connector 15 pin	BROOKS	3VA0162
FC51	MFC 5850E Viton 1/4VCRM 5 SLM- H2-D Connector 15 pin	BROOKS	3VA0164
FC3	MFC 5851EC Viton 1/2VCRM 300 SLM-N2-D Connector 15 pin	BROOKS	VA0200
FC1–FC2	MFC 5851EC Viton 1/2VCRM 500 SLM-H2-D Connector 15 pin	BROOKS	VA0201
M... (9)	Pressure gauge S-122-30-0-100-VSM	SPAN	MN0102
HCL (alternatively PR8)	Three-vay connecting	L.P.E.	RH5101P7
PR4–PR5–PR8	Pressure regulator 64-2662-KA421	TESCOM	RG0047
PR0–PR1–PR3	Pressure regulator 64-2662-KA491-055	TESCOM	RG0048
F8	Filter HCL WGMX MB RR2	MIKROLIS	FG0239
HV8	Valve manual 6LV-DFHFRA-GR	SWAGELOK	VA0026
HV5	Valve manual SS-ONRFR4-P1	SWAGELOK	VA0025
HV1–HV2–HV21	Valve manual 6LV-DF-FR8-GR	SWAGELOK	VA0111
CAV	Compr. air shutoff valve		VA0400
HS	Hydrogen leak sensing head		SI0311
1 pezzo	Gruppo carpenteria assemblato	L.P.E.	RH5122G1

Position	COMPONENTS TABLE	SUPPLIER	LPE p/n

Mt.20,00	Blue pipe ø4 poliurethane		3MP0203
10 pezzi	Tee pneumatic fast connection 4–1/8		3PN4018
12 pezzi	90° pneumatic fast connection 4–1/8		3PN4145
10 pezzi	Washer ø4x9 UNI 6592		RN0032
10 pezzi	Screw T.C.C.E. M4x16 UNI 5931 (fixing subplate)		VT0044
10 pezzi	Screw T.C.C.E. M5x10 UNI 5931 (fixing valve Swagelok)		VT0072
5 pezzi	Subplate valve	L.P.E.	RJ6817P2
16 pezzi	Screw T.E. M5x10 UNI 5737 (fixing valve Swagelok)		VT0630
8 pezzi	Washer ø4x9 UNI 6592		RN0032
8 pezzi	Screw T.C.C.E. M4x16 UNI 5931 (fixing subplate)		VT0044
4 pezzi	Screw T.C.C.E. 8/32 UNCx1 1/2 (fixing mass flow controller)		VT0406
2 pezzi	Spacer to mass flow controller 5+20 lt.	L.P.E.	RJ6820P2
2 pezzi	Screw T.C.C.E. M4x10 UNI 5931 (only for fixing metal mass flow contr.)		VT0021
	Screw T.C.C.E. 8/32 UNCx3/8 (only for fixing viton mass flow contr.)		VT0405
2 pezzi	Screw T.C.C.E. 8/32 UNCx3/8 (fixing mass flow controller)		VT0405
4 pezzi	Subplate to mass flow controller 5+20 lt.	L.P.E.	RJ6820P1
18 pezzi	Washer ø4x9 UNI 6592		RN0032
18 pezzi	Screw T.C.C.E. M4x10 UNI 5931 (fixing subplate)		VT0021
10 pezzi	Screw T.P.S.C.E. 8/32 UNCx3/8 (fixing mass flow controller 5851)		VT0408
1 pezzo	Subplate to mass flow controller (Br.5851)	L.P.E.	RH4830P29
4 pezzi	Subplate low (Br.5851-Ty.2921)	L.P.E.	RJ6817P1
12 pezzi	Washer ø5X10 UNI 6592		RN0031
12 pezzi	Screw T.C.C.E. M5x10 UNI 5931 (fixing pressure regulator Tescom)		VT0072
8 pezzi	Screw T.C.C.E. M4x20 UNI 5931 (fixing soubplate)		VT0045
8 pezzi	Screw T.C.C.E. M5x10 UNI 5931 (fixing manual valve)		VT0072
4 pezzi	Subplate valve	L.P.E.	RH7005

Position	COMPONENTS TABLE	SUPPLIER	LPE p/n

Rev.07 – Modificata traiettoria tubo ingresso H2	02/02/2011	L. Gobbo
Modification description	Date	Prepared by

Item	Qty	Description	Code
Measure without indication of tolerance ISO 2768 – m		Treatment	Material: Valve DP Swagelok; Mass flow controller Brooks (viton/metal)
Prepared by: Alfredo Zamboni	Checked by: V. Ogliari	Title: GAS–METERING – PE 2061S LAY OUT (BASE)	Sheet: 1/1
Original date: 25/10/2004	Checked by: N. Speciale		Scale: 1:4
Approved by: D. Crippa	Order No	Dwg No: RH5121-BASE	Section / Group: P
Latest rev: 07	CONFIDENTIAL	This document and data disclosed herein is not to be reproduced used or disclosed in whole or in part to anyone without the permission of LPE S.p.A.	

Powering the future

A1

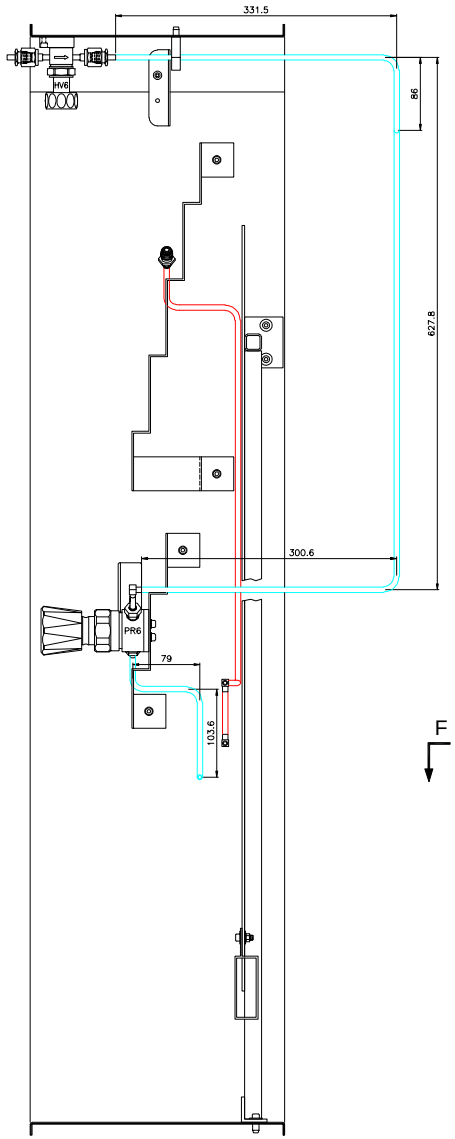

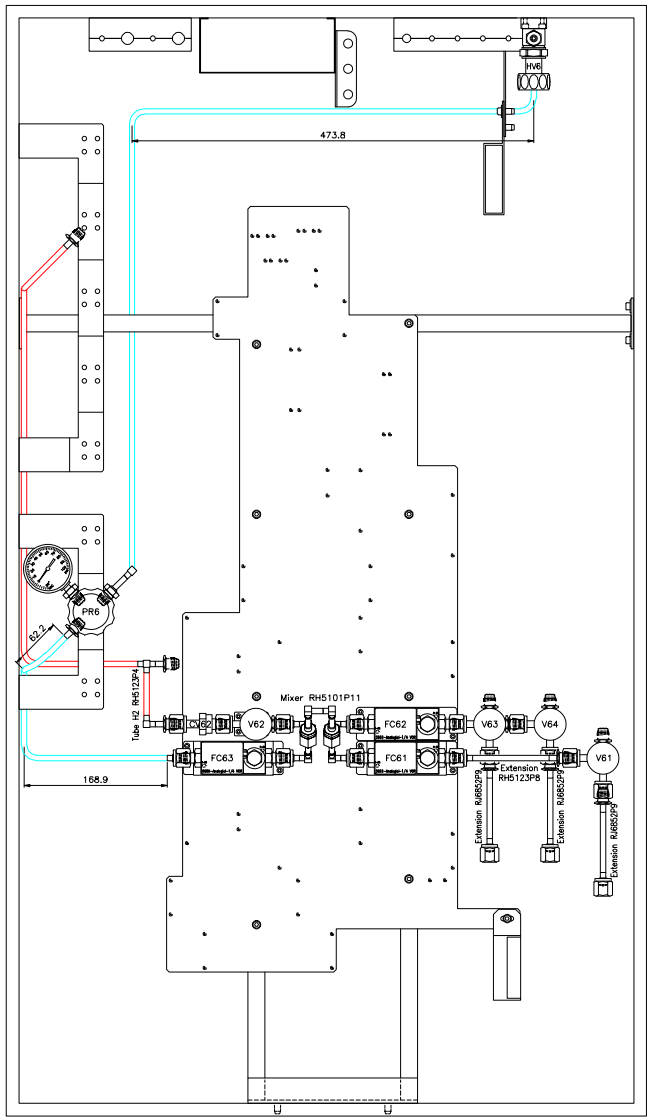

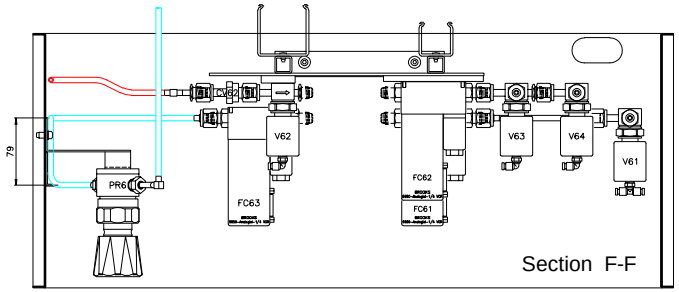

Mt. 5,00	Blue pipe ø4 poliurethane		3MP0203
1 piece	Tee pneumatic fast connection 4–1/8		3PN4018
3 pieces	90° pneumatic fast connection 4–1/8		3PN4145
2 pieces	Washer ø4x9 UNI 6592		RN0032
2 pieces	Screw T.C.C.E. M4x16 UNI 5931 (fixing subplate)		VT0044
2 pieces	Screw T.C.C.E. M5x10 UNI 5931 (fixing valve Swagelok)		VT0072
1 piece	Subplate valve	L.P.E.	RJ6817P2
6 pieces	Washer ø4x9 UNI 6592		RN0032
6 pieces	Screw T.C.C.E. M4x16 UNI 5931 (fixing subplate)		VT0044
4 pieces	Screw T.C.C.E. 8/32 UNCx1 1/2 (fixing mass flow controller)		VT0406
2 pieces	Spacer to mass flow controller 5÷20 lt.	L.P.E.	RJ6820P2
2 pieces	Screw T.C.C.E. 8/32 UNCx3/8 (fixing mass flow controller)		VT0405
3 pieces	Subplate to mass flow controller 5÷20 lt.	L.P.E.	RJ6820P1
2 pieces	Washer ø5X10 UNI 6592		RN0031
2 pieces	Screw T.C.C.E. M5x10 UNI 5931 (fixing pressure regulator Tescom)		VT0072
2 pieces	Screw T.C.C.E. M4x20 UNI 5931 (fixing subplate)		VT0045
2 pieces	Screw T.C.C.E. M5x10 UNI 5931 (fixing manual valve)		VT0072
1 piece	Subplate valve	L.P.E.	RH7005
Mt. 2,10	Tube ø6,35x0,9		SS0019
1 piece	90° union elbow 6LV–4MW–9	SWAGELOK	RA5015
19 pieces	Gasket 1/4 NI–4–VCR–2	SWAGELOK	RA0047
3 pieces	Short male nut SS–4–VCR–4–.54NC	SWAGELOK	RA0104
1 piece	Male nut SS–4–VCR–4	SWAGELOK	RA0104L
1 piece	Female nut SS–4–VCR–1	SWAGELOK	RA0033
1 piece	Short gland 6LV–4–VCR–3S–4TB2	SWAGELOK	RA5006
3 pieces	Gland 316L–4–VCR–3AS	SWAGELOK	RA0102
1 piece	Long gland 316L–4–VCR–3A	SWAGELOK	RA0103
1 piece	Extension (L=133,1)	L.P.E.	RH5123P8
1 piece	Mixer	L.P.E.	RH5101P11
3 pieces	Extension (L=114,3) Optional DOPE 1–2	L.P.E.	RJ6852P9
1 piece	Tube H2 (dope 1–2) Optional DOPE 1–2	L.P.E.	RH5123P4
CV62	Check valve 6L–CW4FR4–VR4	SWAGELOK	VA0644
V63	Valve 4–ways N.C. 6LW–DPD2332–P1–C	SWAGELOK	VA0510
V61–V64	Valve 3–ways N.C. 6LW–DPC233 –P1–C	SWAGELOK	VA0507
V62	Valve 2–ways N.C. 6LW–DPFR4MR4–P1–C	SWAGELOK	VA0505
FC62–FC63	MFC 5850E Viton 1/4VCRM 100SCCM–H2–D Connector 15 pin	BROOKS	3VA0162
FC61	MFC 5850E Viton 1/4VCRM 5 SLM– H2–D Connector 15 pin	BROOKS	3VA0164
M... (1)	Pressure gauge S–122–30–0–100–VSM	SPAN	MN0102
PR6	Pressure regulator 64–2662–KA421	TESCOM	RG0047
HV6	Valve manual SS–DNRFR4–P1	SWAGELOK	VA0025
Position	COMPONENTS TABLE	SUPPLIER	LPE p/n

Item	Qty	Description	Code

Measure without indication of tollerance Tolleranza media UNI 7226	Treatment	Material Valve DP Swagelok Mass flow controller Brooks (viton/metal)	
Prepared by Alfredo Zamboni	Checked by V. Ogliari	Title GAS–METERING – PE 2061S LAY–OUT (DOPE 2)	Sheet 1/ 1
Original date 25/10/2004	Checked by		Scale 1:4
LPE Powering the future	Approved by D. Crippa	Order No / Dwg No RH5121-DOPE2 / Section / Group P	
	Latest rev 03	CONFIDENTIAL This document and data disclosed herein is not to be reproduced used or disclosed in whole or in part to anyone without the permission of LPE S.p.A.	

Rev.03 – Eliminati filtri e trasduttori	15/10/2010	A. Zamboni
Modification description	Date	Prepared by

A2

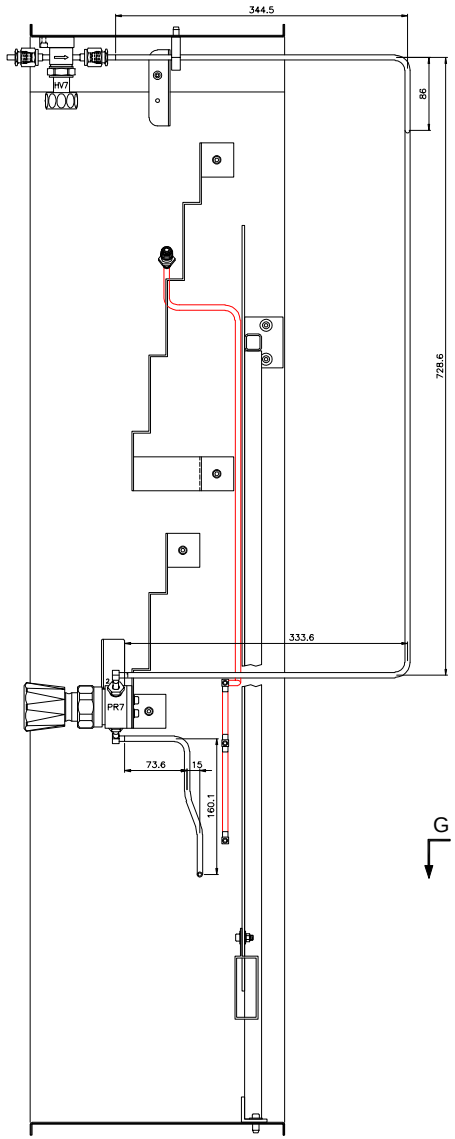

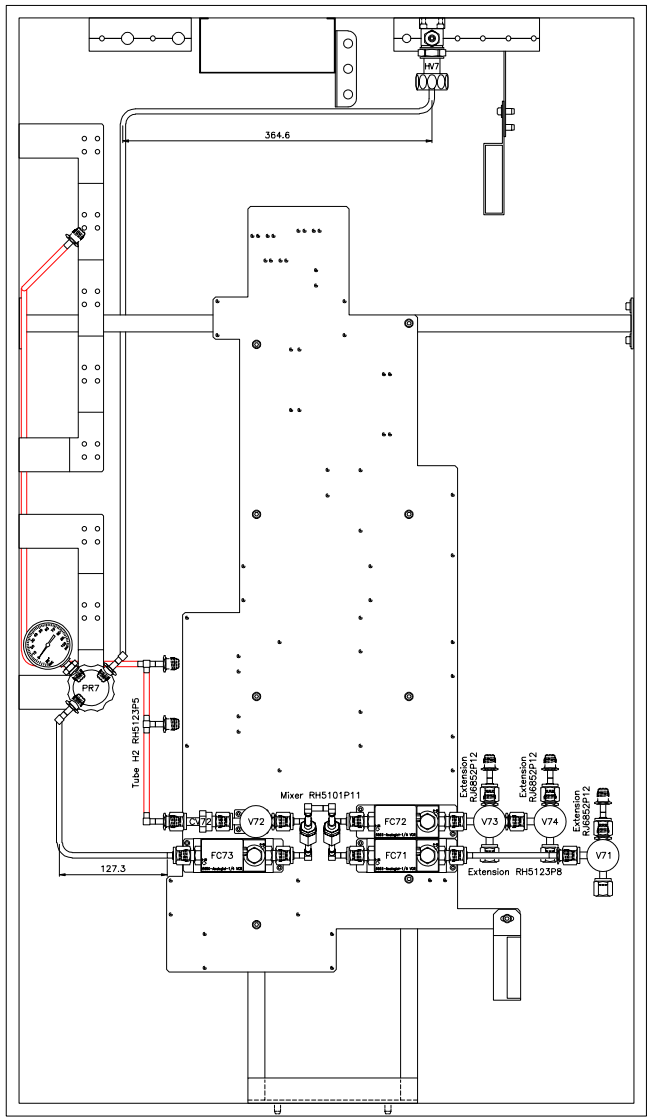

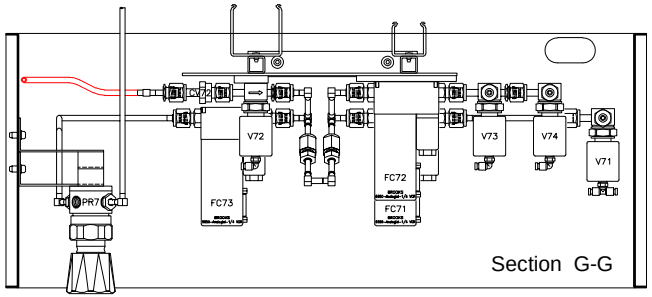

Mt. 5,00	Blue pipe ø4 poliurethane		3MP0203
1 piece	Tee pneumatic fast connection 4–1/8		3PN4018
3 pieces	90° pneumatic fast connection 4–1/8		3PN4145
2 pezzi	Washer ø4x9 UNI 6592		RN0032
2 pezzi	Screw T.C.C.E. M4x16 UNI 5931 (fixing subplate)		VT0044
2 pezzi	Screw T.C.C.E. M5x10 UNI 5931 (fixing valve Swagelok)		VT0072
1 pezzo	Subplate valve	L.P.E.	RJ6817P2
6 pezzi	Washer ø4x9 UNI 6592		RN0032
6 pezzi	Screw T.C.C.E. M4x16 UNI 5931 (fixing subplate)		VT0044
4 pezzi	Screw T.C.C.E. 8/32 UNCx1 1/2 (fixing mass flow controller)		VT0406
2 pezzi	Spacer to mass flow controller 5÷20 lt.	L.P.E.	RJ6820P2
2 pezzi	Screw T.C.C.E. 8/32 UNCx3/8 (fixing mass flow controller)		VT0405
3 pezzi	Subplate to mass flow controller 5÷20 lt.	L.P.E.	RJ6820P1
2 pezzi	Washer ø5X10 UNI 6592		RN0031
2 pezzi	Screw T.C.C.E. M5x10 UNI 5931 (fixing pressure regulator Tescom)		VT0072
2 pezzi	Screw T.C.C.E. M4x20 UNI 5931 (fixing subplate)		VT0045
2 pezzi	Screw T.C.C.E. M5x10 UNI 5931 (fixing manual valve)		VT0072
1 pezzo	Subplate valve	L.P.E.	RH7005
Mt. 2,30	Tube ø6,35x0,9		SS0019
2 pezzi	90° union elbow 6LV–4MW–9	SWAGELOK	RA5015
19 pezzi	Gasket 1/4 NI–4–VCR–2	SWAGELOK	RA0047
4 pezzi	Short male nut SS–4–VCR–4–.54NC	SWAGELOK	RA0104
1 pezzi	Female nut SS–4–VCR–1	SWAGELOK	RA0033
1 pezzo	Short gland 6LV–4–VCR–3S–4TB2	SWAGELOK	RA5006
4 pezzi	Gland 316L–4–VCR–3AS	SWAGELOK	RA0102
1 pezzo	Extension (L=133,1)	L.P.E.	RH5123P8
1 pezzo	Mixer	L.P.E.	RH5101P11
3 pezzi	Extension (L= 43,1)	L.P.E.	RJ6852P12
1 pezzo	Tube H2 (dope 1–2–3)	L.P.E.	RH5123P5
CV72	Check valve 6L–CW4FR4–VR4	SWAGELOK	VA0644
V73	Valve 4–ways N.C. 6LW–DPD2332–P1–C	SWAGELOK	VA0510
V71–V74	Valve 3–ways N.C. 6LW–DPC233 –P1–C	SWAGELOK	VA0507
V72	Valve 2–ways N.C. 6LW–DPFR4MR4–P1–C	SWAGELOK	VA0505
FC72–FC73	MFC 5850E Viton 1/4VCRM 1 SLM– H2–D Connector 15 pin	BROOKS	3VA0163
FC71	MFC 5850E Viton 1/4VCRM 5 SLM– H2–D Connector 15 pin	BROOKS	3VA0164
M... (1)	Pressure gauge S–122–30–0–100–VSM	SPAN	MN0102
PR7	Pressure regulator 64–2662–KA421	TESCOM	RG0047
HV7	Valve manual SS–DNRFR4–P1	SWAGELOK	VA0025
Position	COMPONENTS TABLE	SUPPLIER	LPE p/n

Item	Qty	Description	Code

Measure without indication of tollerance Tolleranza media UNI 7226	Treatment	Material Valve DP Swagelok Mass Flow controller Brooks (viton/metal)	
Prepared by Alfredo Zamboni	Checked by V. Ogliari	Title GAS–METERING – PE 2061S LAY–OUT (DOPE 3)	Sheet 1/ 1
Original date 25/10/2004	Checked by		Scale 1:4
LPE Powering the future	Approved by D. Crippa	Order No / Dwg No RH5121-DOPE3	Section / Group P
	Latest rev 03	CONFIDENTIAL	

This document and data disclosed herein is not to be reproduced used or disclosed in whole or in part to anyone without the permission of LPE S.p.A.

Modification description	Date	Prepared by
Rev.03 – Eliminati filtri e trasduttori	15/10/2010	A. Zamboni

A2

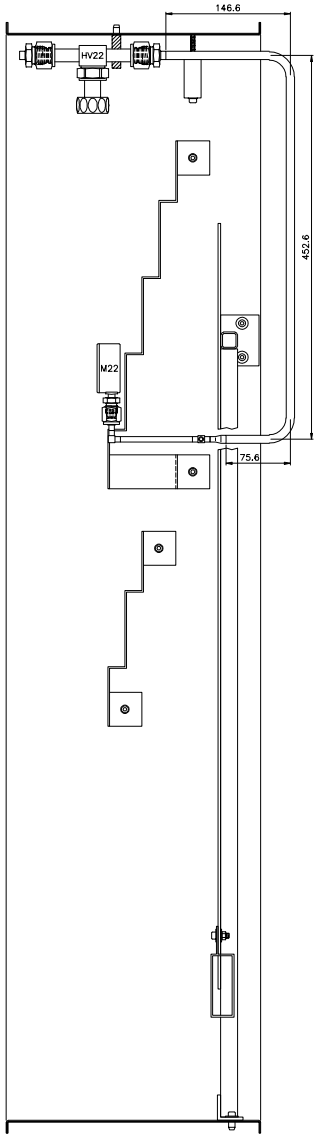

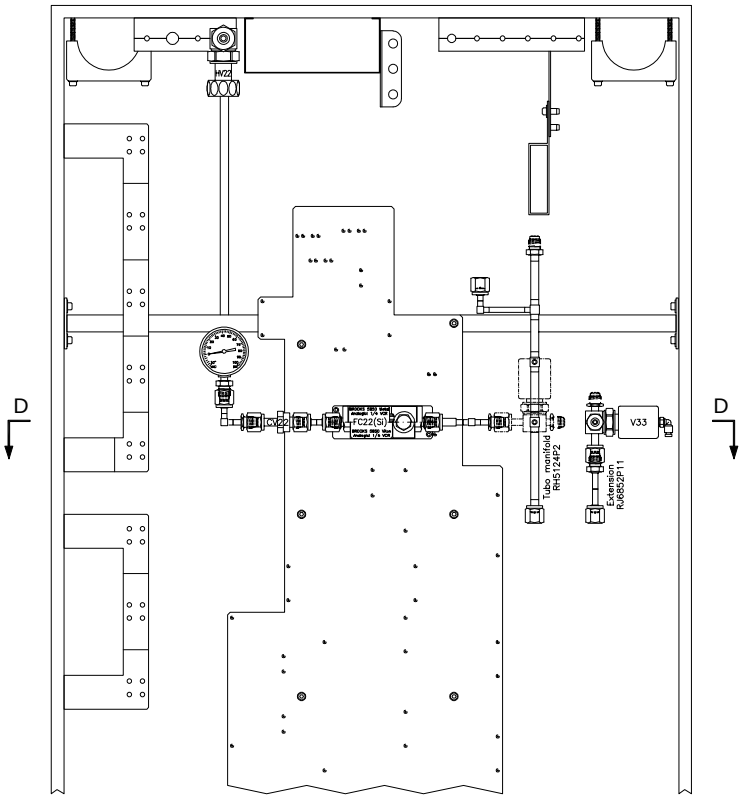

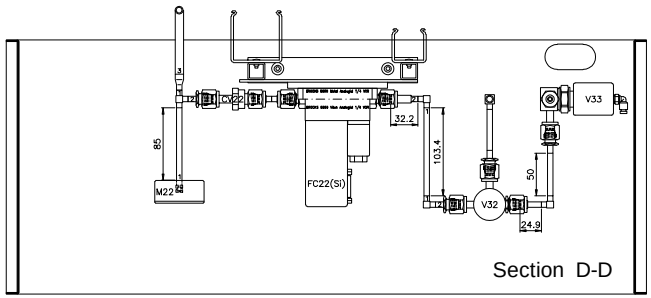

Section D-D

ALTERNATIVE FOR LINE SILICON
(common inlet for two mass flow controller)

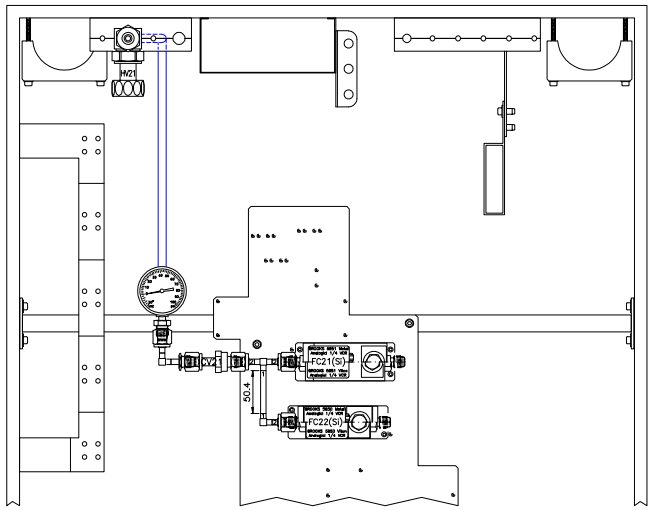

Mt. 0,55	Tube ø6,35x0,9		SS0019
1 piece	Union tee 6LV–4MW–3	SWAGELOK	RA5010
1 piece	90° union elbow 6LV–4MW–9	SWAGELOK	RA5015

Mt. 3,00	Blue pipe ø4 poliurethane		3MP0203
2 pieces	90° pneumatic fast connection 4–1/8		3PN4145
2 pieces	Washer ø4x9 UNI 6592		RN0032
2 pieces	Screw T.C.C.E. M4x16 UNI 5931 (fixing subplate)		VT0044
2 pieces	Screw T.C.C.E. M4x10 UNI 5931 (only for fixing metal mass flow contr.)		VT0021
	Screw T.C.C.E. 8/32 UNCx3/8 (only for fixing viton mass flow contr.)		VT0405
1 piece	Subplate to mass flow controller 5÷20 lt.	L.P.E.	RJ6820P1
Mt. 0,70	Tube ø9,52x0,9		SS0952
Mt. 0,25	Tube ø6,35x0,9		SS0019
1 piece	Reducing union 6LV–6MW–6–4	SWAGELOK	RA5013
1 piece	Union tee 6LV–4MW–3	SWAGELOK	RA5010
4 pieces	90° union elbow 6LV–4MW–9	SWAGELOK	RA5015
2 pieces	Gasket 3/8 NI–8–VCR–2	SWAGELOK	RA0050
2 pieces	Male nut SS–8–VCR–4	SWAGELOK	RA0059
2 pieces	Long gland 6LV–8–VCR–3–6TB2	SWAGELOK	RA0057
2 pieces	Gasket 1/4 "H" NI–4–VCR–2–ZC–VS	SWAGELOK	RA5017
14 pieces	Gasket 1/4 NI–4–VCR–2	SWAGELOK	RA0047
3 pieces	Short male nut SS–4–VCR–4–.54NC	SWAGELOK	RA0104
5 pieces	Female nut SS–4–VCR–1	SWAGELOK	RA0033
3 pieces	Short gland 6LV–4–VCR–3S–4TB2	SWAGELOK	RA5006
4 pieces	Gland 316L–4–VCR–3AS	SWAGELOK	RA0102
1 piece	Long gland 316L–4–VCR–3A	SWAGELOK	RA0103
1 piece	Prolunga (L= 70,6)	L.P.E.	RJ6852P11
1 piece	Tubo manifold (due linee silicio)	L.P.E.	RH5124P2
CV22	Check valve 6L–CW4FR4–VR4	SWAGELOK	VA0644
V32–V33	Valve 3–ways N.C. 6LVV–DPC233–P1–C	SWAGELOK	VA0507
FC22(Si)	MFC 5850EME Metal 1/4VCRM 20 SLM– H2–D Conn.15 pin (alternatively)	BROOKS	.....
	MFC 5850E Viton 1/4VCRM 20 SLM– H2–D Connector 15 pin		3VA0161/062
M22	Pressure gauge S–122–30–0–100–VSM	SPAN	MN0102
HV22	Valve manual 6LV–DF–FR8–P–GR	SWAGELOK	VA0111
Position	COMPONENTS TABLE	SUPPLIER	LPE p/n

Item	Qty	Description	Code

Measure without indication of tollerance: Tolleranza media UNI 7226	Treatment	Material: Valve DP Swagelok; Mass flow controller Brooks (viton/metal)	
Prepared by: Alfredo Zamboni	Checked by: V. Ogliari	Title: GAS–METERING – PE 2061S; LAY–OUT (SILICON 2)	Sheet: 1/ 1
Original date: 25/10/2004	Checked by		Scale: 1:4
Approved by: D. Crippa	Order No	Dwg No: RH5121-SI2-20	Section	Group: P
Latest rev: 02	CONFIDENTIAL	This document and data disclosed herein is not to be reproduced used or disclosed in whole or in part to anyone without the permission of LPE S.p.A.	

Powering the future

Rev.02 – General update	15/10/2010	A. Zamboni
Modification description	Date	Prepared by

A2

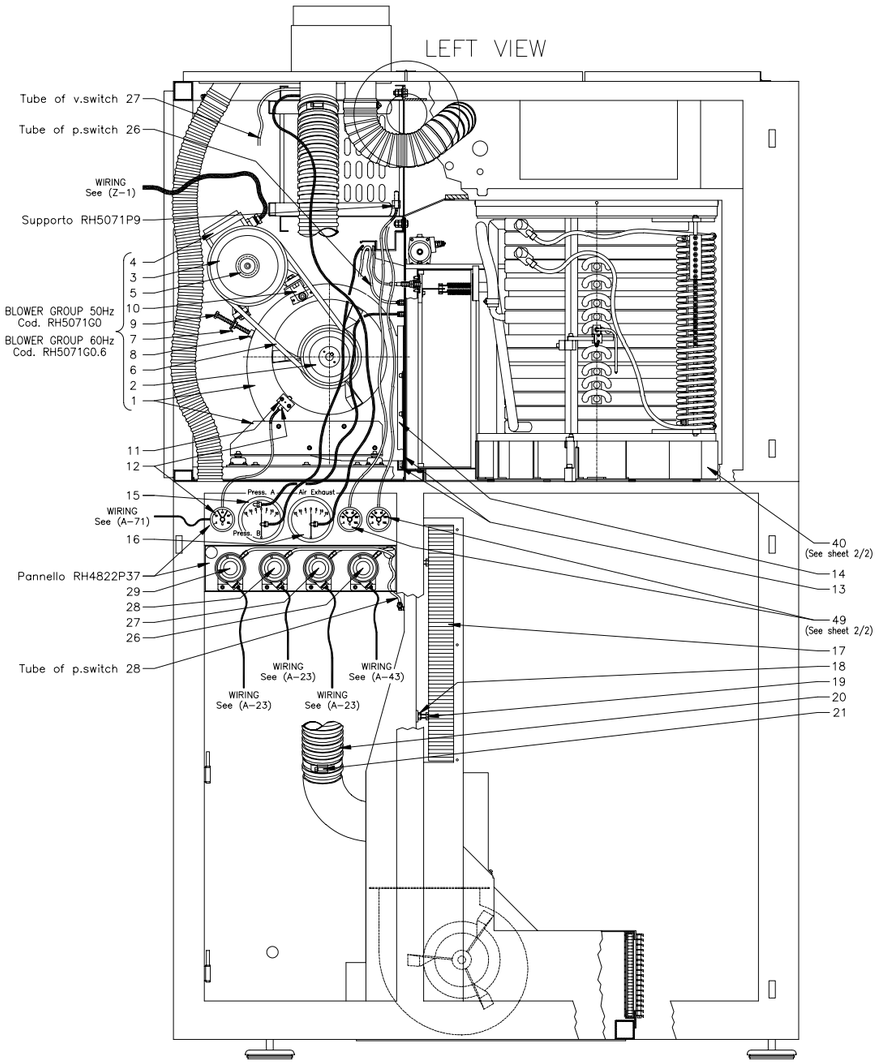

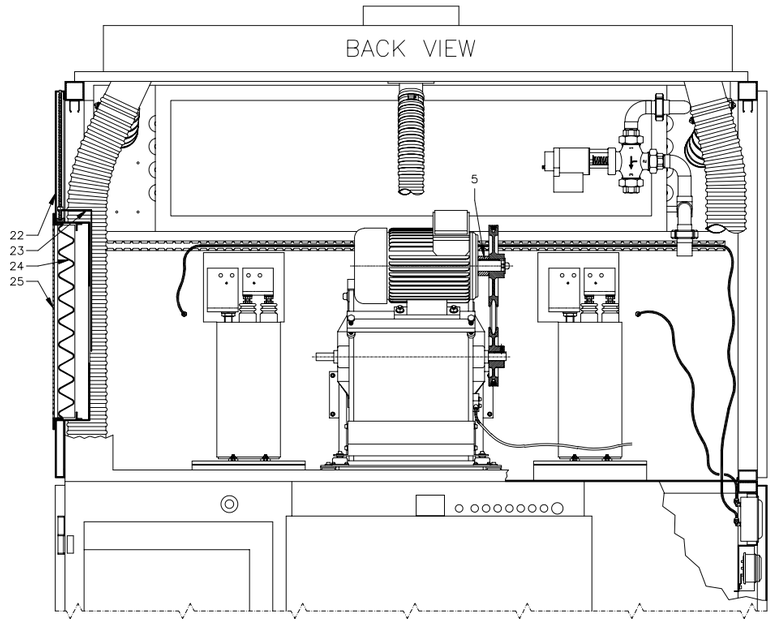

Item	Qty	Description		Code
29	1	PRESSURE SWITCH SPOILER		PQ0515
28	1	PRESSURE SWITCH LAMINAR FLOW		PQ0516
27	1	EXHAUST AIR VACUUM SWITCH		PQ0515
26	1	COOLING AIR PRESSURE SWITCH		PQ0515
25	1	GRID		RH4809P6
24	1	PREFILTER		RK0060
23	1	SHUTTER BLADE		RH4809P11
22	1	PANEL, FILTER HOLDER		RH4809P5
21	2+1	HOSE CLAMP ø100		SS0018
20	1	CORRUGATED PVC HOSE ø100 (L=1950mm)		RH5075P2
19	4	NUT M10 EN24032		DA0010
18	4	SCREW M10x40 EN 24017		VT0117
17	1	ABSOLUTE FILTER HEPA		RK0104
16	1	AIR PRESSURE GAUGE DWYER 2300-30cm		MN0610
15	1	AIR PRESSURE GAUGE DWYER 2300-30cm		MN0610
14	1	BLOWER FRAME		RH4812P7
13	1	SEAL KIT FOR BLOWER FRAME		RH5071P8
12	1	THERMAL SWITCH SENSOR		TM0025
11	1	THERMAL SWITCH SUPPORT		RH5071P5
10	1	MOTOR SUPPORT		RH4838P3
9	2	SCREW M10x100 EN 24017		VT0100
8	2	SCREW SUPPORT		RH4838P5
7	1	MOTOR SUPPORT		RH4838P4
6	1	BELT	60Hz	CC0046
	1	BELT B44 1/4	50Hz	CC0144
5	1	PULLEY SPACER		RH5071P6
4	1	MOTOR MV100 LBX2-B3 (4kw)		MV0039
3	1	MOTOR PULLEY B200		RH5071P2
2	1	BLOWER PULLEY B180	60Hz	RH5071P7
	1	BLOWER PULLEY B140	50Hz	RH5071P3
1	1	BLOWER & SUPPORT		RH5071G1

Measure without indication of tollerance ISO 2768 – m	Treatment	Material	
Prepared by A. Zamboni	Checked by V.O.	Title PE2061 AIR GROUP	Sheet 1/2
Original date 19/07/2004	Checked by N.S.		Scale A4
LPE Powering the future	Approved by D.C.	Order No / Dwg No RH5070U1 / Section / Group Q	
	Latest rev 09	CONFIDENTIAL	

This document and data disclosed herein is not to be reproduced used or disclosed in whole or in part to anyone without the permission of LPE S.p.A.

Modification description	Date	Prepared by
Rev.09: Modificata posizione 59	03/05/2007	A. Zamboni

A2

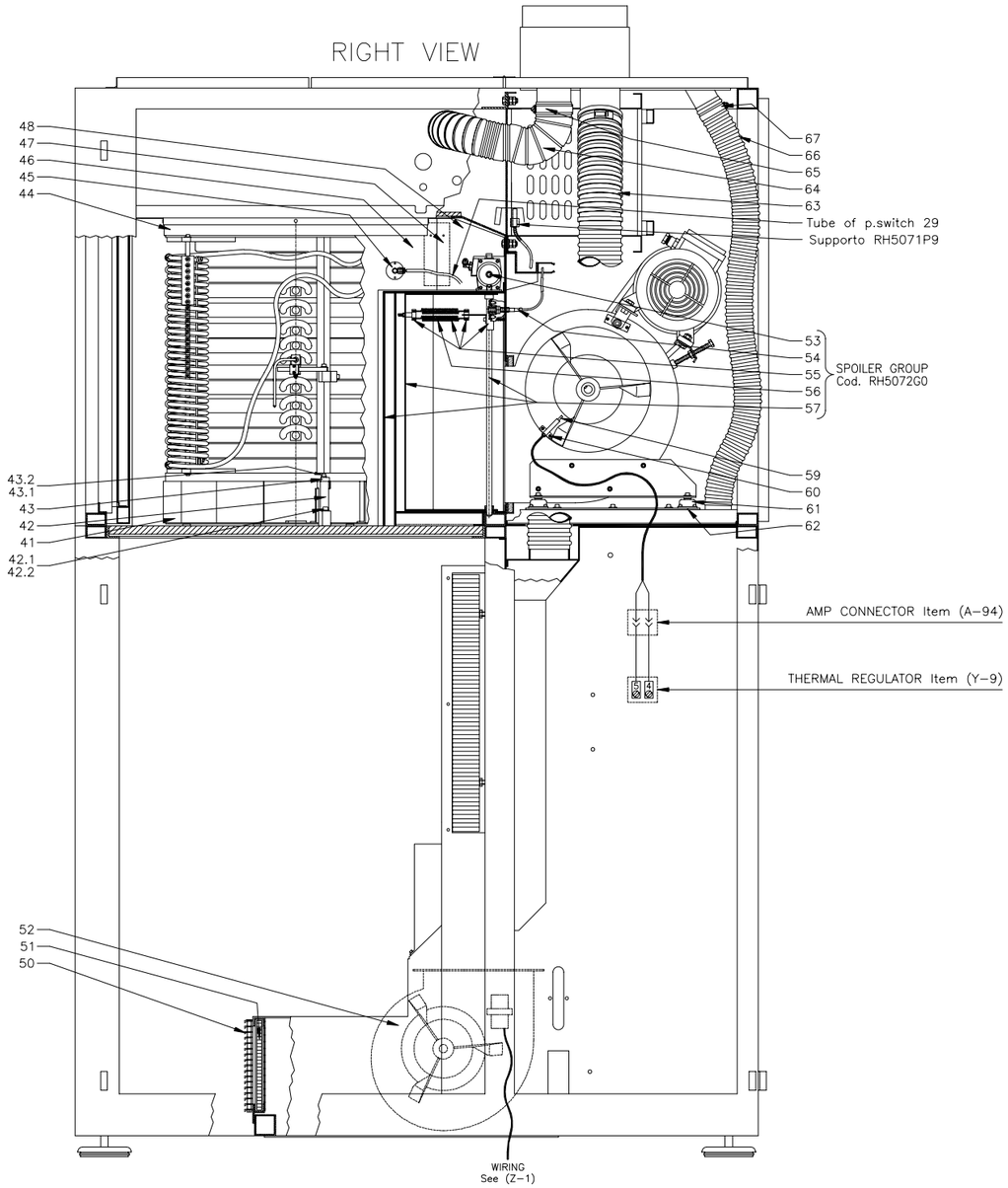

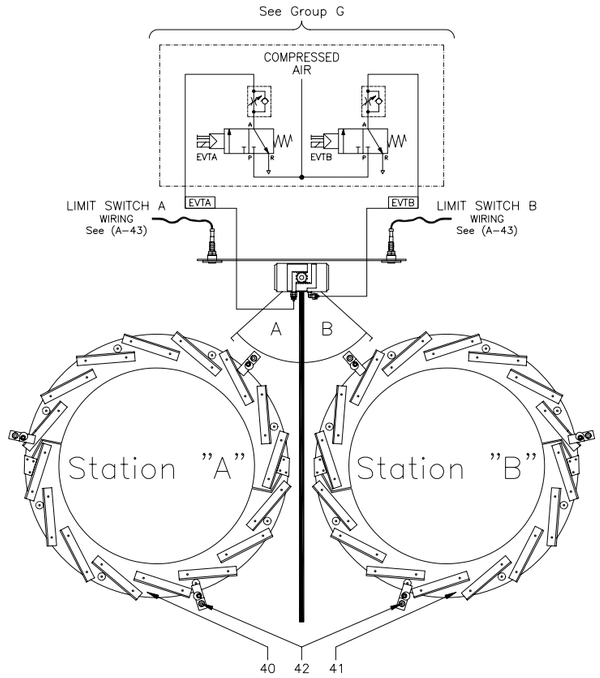

Item	Qty	Description	Code
67	1	HOSE CLAMP ø60	SS0082
66	1	CORRUGATED PVC HOSE ø60 (L=1100mm)	RH5075P4
65	1+1	HOSE CLAMP ø80	SS0127
64	1+1	CORRUGATED ALLUMINUM HOSE ø80 (L=200mm)	RH5075P1
63	1	CORRUGATED PVC HOSE ø100 (L=1250mm)	RH5075P3
62	1	BASE PLATE	RH4838P1
61	4	SHOCK ABSORBER AA20 N 60Sh	MP0167
60	1	THERMAL REGULATOR SUPPORT	RH5071P4
59	1	THERMAL REGULATOR SENSOR KIT	RH5071G3
58			
57	1	SPOILER HOUSING & SHAFT	RH5072G1
56	2	SPRING	RH5072P3
55	1	KIT FOR 3-POSITIONS SPOILER	RH5072G3
54	2	PROXIMITY SWITCH DCA12/4719KS	RL0091
53	1	PNEUMATIC ACTUATOR WITH CONNECTIONS	RH5072G5
52	1	LAMINAR FLOW BLOWER DDM9/9 (0,55kw) 60Hz	MV0013
	1	LAMINAR FLOW BLOWER DDM9/9 (0,42kw) 50Hz	MV0014
51	1	VILEDON PREFILTER FOR LAMINAR FLOW	RK0015
50	1	PREFILTER GRID	RH4820P1
49	1+1	THERMAL SWITCH SENSOR	TM0031
48	1	CHAMBER PLASTIC FRAME	RH4811P16
47	1	JOINT PLATE	RH4811P17
46	1	CHAMBER PLASTIC FRAME	RH4811P15
45	1	PRESSURE SWITCH MEASURING JOINT	RH5072P4
44	1+1	TEFLON SEALING STRIP	RH5074G1
43.2	3+3	WASHER ø6 UNI 6592	RN0033
43.1	3+3	SCREW M6x20 UNI 5931	VT0071
43	3+3	ECCENTRIC PIN	RH5073P5
42.2	3+3	WASHER ø8 UNI 6592	RN0034
42.1	3+3	SCREW M8x50 UNI 5931	VT0620
42	3+3	INDUCTION COIL SUPPORT	RH5073P4
41	1	CONVEYOR TURBINE CCW (Station B)	RH5073B
40	1	CONVEYOR TURBINE CW (Station A)	RH5073A

Measure without indication of tollerance ISO 2768 – m	Treatment	Material	
Prepared by A. Zamboni	Checked by V.O.	Title PE2061 AIR GROUP	Sheet 2 / 2
Original date 19/07/2004	Checked by N.S.		Scale
LPE SpA Powering the future	Approved by D.C.	Order No	Dwg No RH5070U1
	Latest rev 09	Section	Group Q

CONFIDENTIAL This document and data disclosed herein is not to be reproduced used or disclosed in whole or in part to anyone without the permission of LPE S.p.A.

Modification description	Date	Prepared by
Rev.09: Modificata posizione 59	03/05/2007	A. Zamboni

A2

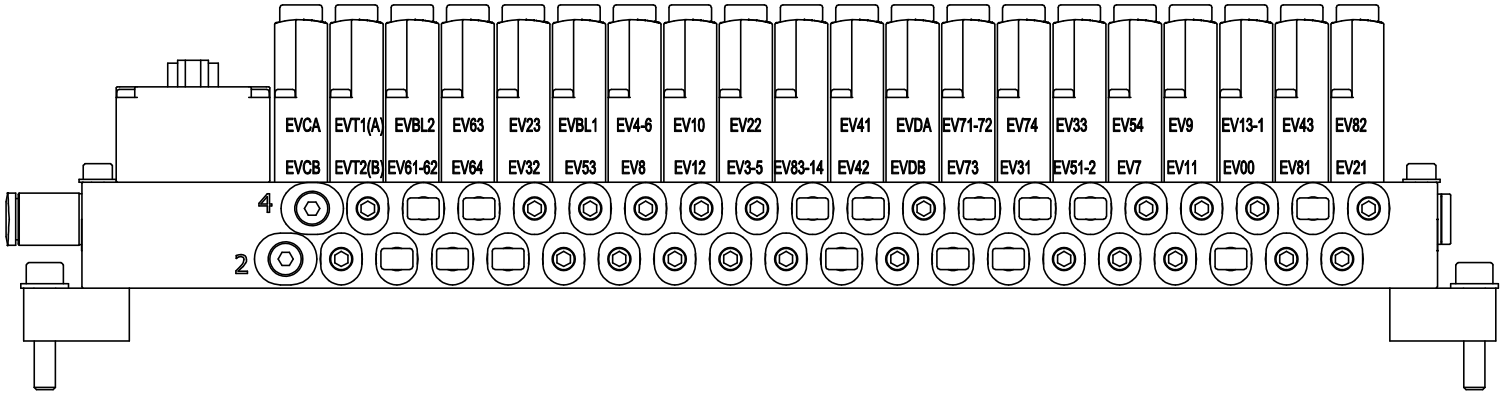

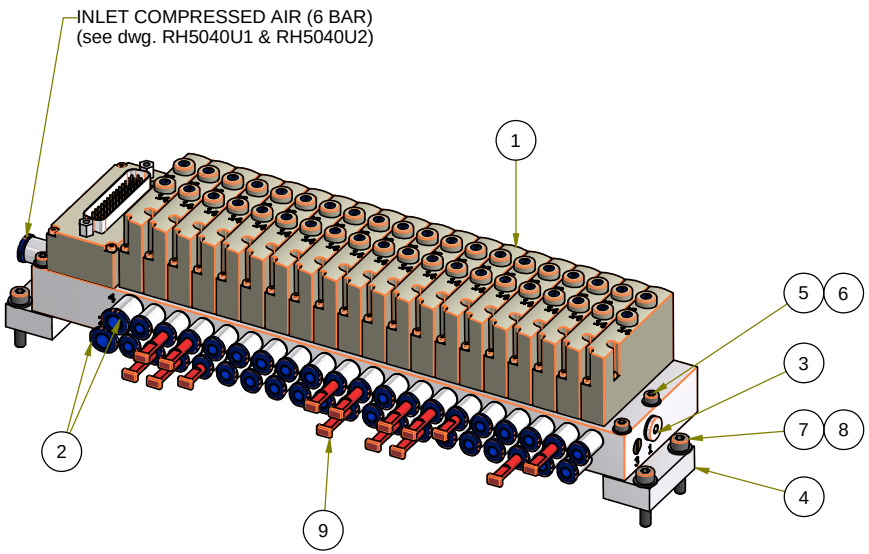

Item	Qty	Description	Code
9	15	PLUG 4mm - RS:722-047	3PN0722
8	4	WASHER Ø4 UNI 6592	RN0032
7	4	SCREW M4x20 UNI 5931	VT0045
6	4	WASHER Ø3 UNI 6592	RN0030
5	4	SCREW M3x25 UNI 5931	VT0065
4	2	FIXING PLATE VALVE "VTOC"	RH5131P1
3	1	BLANKING PLUG B-M7 - 174309	PN0113
2	2	STRAIGHT FITTING QSM-M5-6-I-20	PN0035
1	1	ELECTROVALVES CASSETTE VTOC-MSDLT-44V5-1T-Q6-USA-Q4-A-20K	VA0084

Description	Date	Prep.
Rev.02: corretta numerazione elettrovalvole	21/03/2011	L.Gobbo

Measures without indication of tolerance: ISO 2768 - m

Treatment

Material

Prepared by: Alfredo Zamboni

Checked by: V.O.

Checked by:

Original date: 12/10/2010

Approved by: D.C.

Latest rev.: 02

Title: SOLENOID VALVES GROUP
Reactor PE2061S

Sheet: 1 / 1

Scale: 1:1

Order No

Dwg No: RH5131U1

Section

Group: R

Powering the future

CONFIDENTIAL this document and data disclosed herein are not to be reproduced used or disclosed in whole or in part to anyone without the permission of L.P.E s.p.a

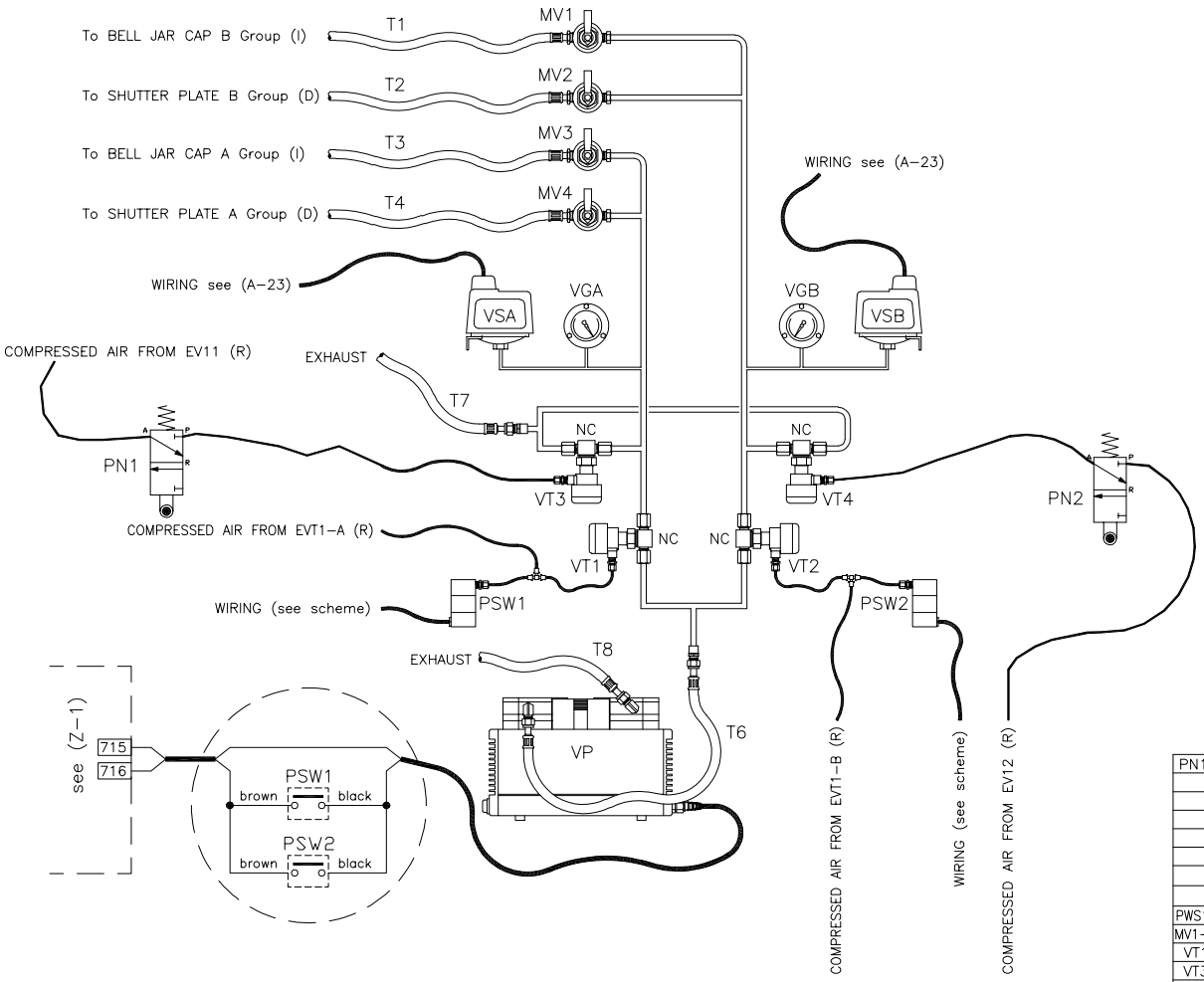

GROUP COMPLETE 50Hz – p/n RH5090
GROUP COMPLETE 60Hz – p/n RH5090.6
(it includes #7 rubber tubes)

Item	Qty	Description	Code
PN1–PN2	2	SAFETY PNEUMATIC VALVE 338–955	See (F–72)
T6	1	RUBBER TUBE I.D. 10mm Length 430	RH4853T6
T8	1	RUBBER TUBE I.D. 10mm Length 2600	RH4853T8
T7	1	RUBBER TUBE I.D. 10mm Length 2500	RH4853T7
T4	1	RUBBER TUBE I.D. 6mm Length 3800	RH5091T4
T3	1	RUBBER TUBE I.D. 6mm Length 3300	RH5091T3
T2	1	RUBBER TUBE I.D. 6mm Length 4600	RH5091T2
T1	1	RUBBER TUBE I.D. 6mm Length 4150	RH5091T1
PWS1–PSW2	2	PRESSURE SWITCH 3344–PE–1/8	MN0048
MV1–2–3–4	4	MANUAL VALVE TESCOM	VA0020
VT1–VT2	2	PNEUMATIC VALVE NUPRO N.C. (CONNECTOR 6–VCO)	VA0110
VT3–VT4	2	PNEUMATIC VALVE NUPRO N.C. CONNECTOR 4–VCO)	VA0108
VSA–VSB	2	VACUUM SWITCH D1–T–H18–SS	PQ0018
VGA–VGB	2	VACUUM GAUGE (–1÷0 Bar) ¼"	MN0013
VP	1	VACUUM PUMP 230V/60Hz	MV0823
		VACUUM PUMP 230V/50Hz	MV0822

Measure without indication of tollerance ISO 2768 – m	Treatment	Material	
Prepared by L.G.	Checked by V.O	Title VACUM TEST GROUP (SCHEME)	Sheet 1/ 1
Original date 25/09/03	Checked by		Scale 1:2.5
LPE Powering the future	Approved by D.C	Order No / Dwg No RH5090U1	Section / Group S
	Latest rev 04	CONFIDENTIAL This document and data disclosed herein is not to be reproduced used or disclosed in whole or in part to anyone without the permission of LPE S.p.A.	

Modification description	Date	Prepared by
Rev.04: modified length of tube RH4853T7	11/12/2013	Sis.ma

A2

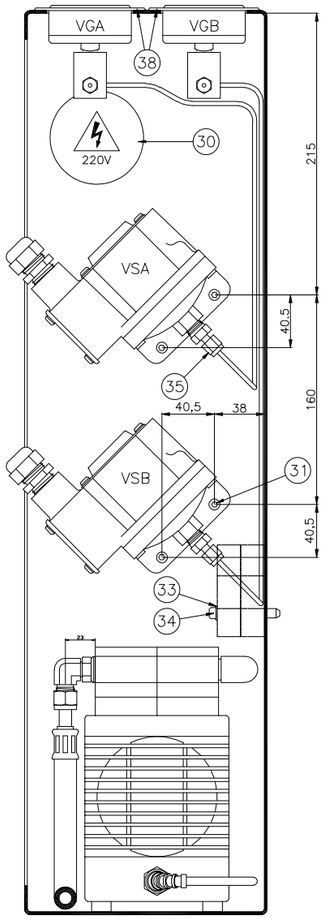

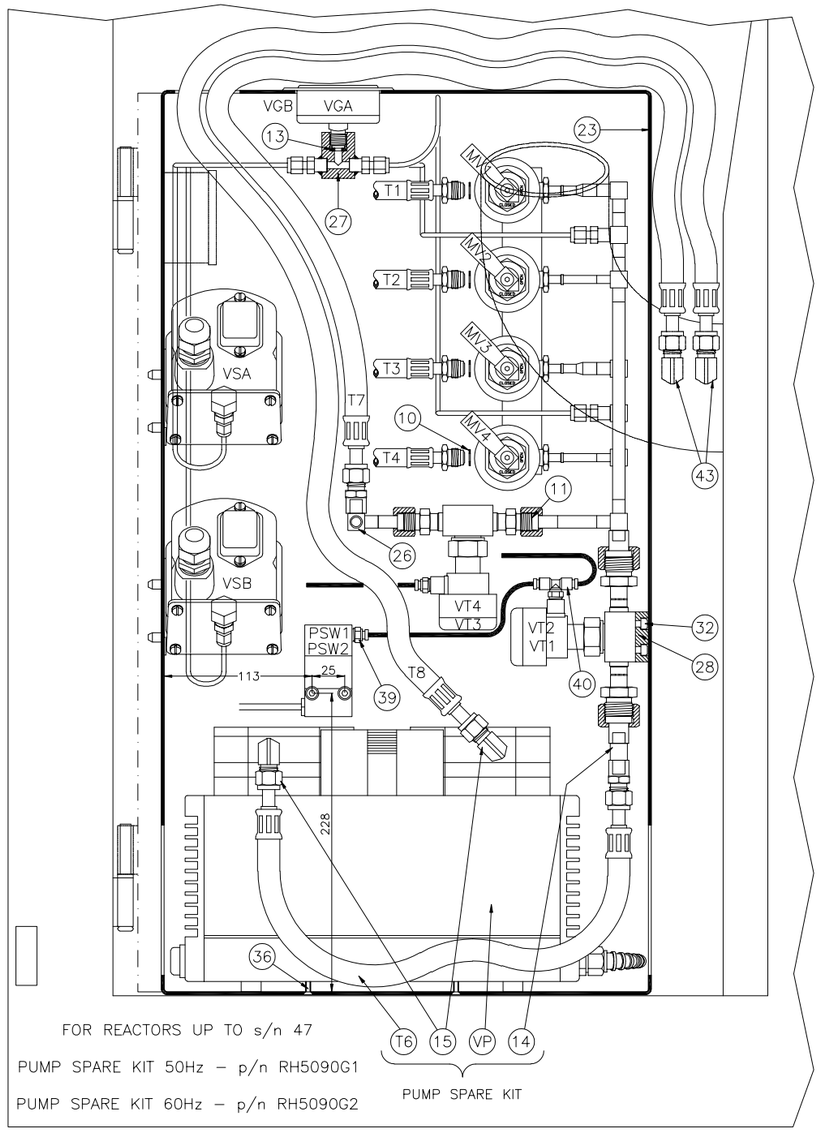

FOR REACTORS UP TO s/n 47

PUMP SPARE KIT 50Hz – p/n RH5090G1

PUMP SPARE KIT 60Hz – p/n RH5090G2

GROUP COMPLETE 50Hz – p/n RH5090
GROUP COMPLETE 60Hz – p/n RH5090.6
(it includes #7 rubber tubes)

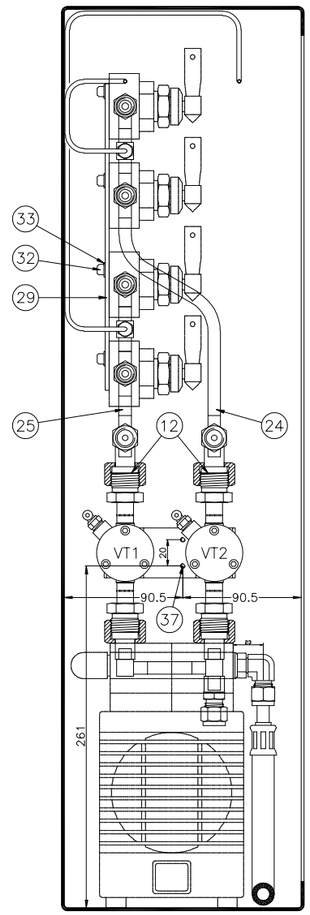

43	2	ELBOW CONNECTOR SWAGELOK SS–600–2–4	RA0002
42		TUBE ø3,16 BLACK	MP0201
41		TUBE ø3,2 sp.0,7mm–AISI 316	SS0003
40	2	PNEUMATIC UNION TEE 3,2–1/8"	PN0328
39	6	STRAIGHT PNEUMATIC UNION 3,2–1/8"	PN0308
38	6	SCREW T.S. UNI 5933–M3x10	VT0225
37	1	SCREW T.S. UNI 5933–M4x12	VT0222
36	2	SCREW T.S. UNI 5933–M4x20	VT0236
35	2	STRAIGHT CONNECTOR SWAGELOK SS–200–1–4	RA0069
34	2	SCREW T.C.E.I. UNI 5931–M5x50–ACC. INOX	VT0038
33	8	WASHER UNI 6592 ø5,3	RN0031

32	8	SCREW T.C.E.I. 10/32x1/4	VT0015
31	4	SCREW T.C.E.I. UNI 5931–M5x16–ACC. INOX	VT0030
30	1	BOX CONNECTORS (IP44) GW44001 GEWISS	CT0252
29	1	FIXING PLATE VALVE TESCOM	RH5093P4
28	1	FIXING PLATE VALVE SWAGELOK	RH5093P3
27	2	FITTING FOR PRESSURE GAUGE	RH5093P2
26	1	BREAKING VACUUM COLLECTOR	RH5092P3
25	1	MANIFOLD VALVE STATION "A"	RH5092P2
24	1	MANIFOLD VALVE STATION "B"	RH5092P1
23	1	VACUUM BOX TESTING	RH4822P1
15	2	SWIVEL MALE ELBOW 3/8SW–1/4CIL. (SS–600–2–4PR)	RA0071
14	1	COLLECTOR	RH5092P4
13	2	GASKET FOR VACUUM GAUGE (TEFLON øi5,2 øe11,5 sp3)	GU0050
12	4	O–RING 3043 VITON (or 2–111 Parker)	GU0069
11	4	O–RING 2025 VITON (or 2–010 Parker)	GU0068
10	12	GASKET FOR VCR 4–VCR–2	RA0045

T8	1	RUBBER TUBE I.D. 10mm Length 2600	See SCHEME
T7	1	RUBBER TUBE I.D. 10mm Length 2400	See SCHEME
T6	1	RUBBER TUBE I.D. 10mm Length 430	See SCHEME
T4	1	RUBBER TUBE I.D. 6mm Length 3800	See SCHEME
T3	1	RUBBER TUBE I.D. 6mm Length 3300	See SCHEME
T2	1	RUBBER TUBE I.D. 6mm Length 4600	See SCHEME
T1	1	RUBBER TUBE I.D. 6mm Length 4150	See SCHEME
PWS1–2	2	PRESSURE SWITCH 3344–PE–1/8	See SCHEME
MV1÷4	4	MANUAL VALVE TESCOM	See SCHEME
VT1–2	2	PNEUMATIC VALVE NUPRO (CONNECTOR 6–~~(illegible)~~. RH4695)	See SCHEME
VT3–4	2	PNEUMATIC VALVE NUPRO (CONNECTOR 4–~~(illegible)~~. RH4695)	See SCHEME
VSA–B	2	VACUUM SWITCH D1–T–H18–SS	See SCHEME
VGA–B	2	VACUUM GAUGE (–1÷0 Bar) ¼"	See SCHEME
VP	1	VACUUM PUMP 230V/60Hz DIVAC 1.2L	See SCHEME
		VACUUM PUMP 230V/50Hz DIVAC 1.2L	See SCHEME

Rev.02 – General update	25/06/2010	A. Zamboni
Modification description	Date	Prepared by

Item	Qty	Description	Code

Measure without indication of tollerance | Treatment | Material

Prepared by: Alfredo Zamboni | Checked by: V. Ogliari | Original date: 15/07/1998 | Checked by: N. Speciale | Approved by: D. Crippa | Latest rev: 02

Title: LATOUT VACUUM TEST GROUP
REACTOR PE 2061S

Sheet: 1/ 1 | Scale: A2

Order No | Dwg No: RH5090U2 | Section | Group: S

LPE SpA Powering the future

CONFIDENTIAL This document and data disclosed herein is not to be reproduced used or disclosed in whole or in part to anyone without the permission of LPE S.p.A.

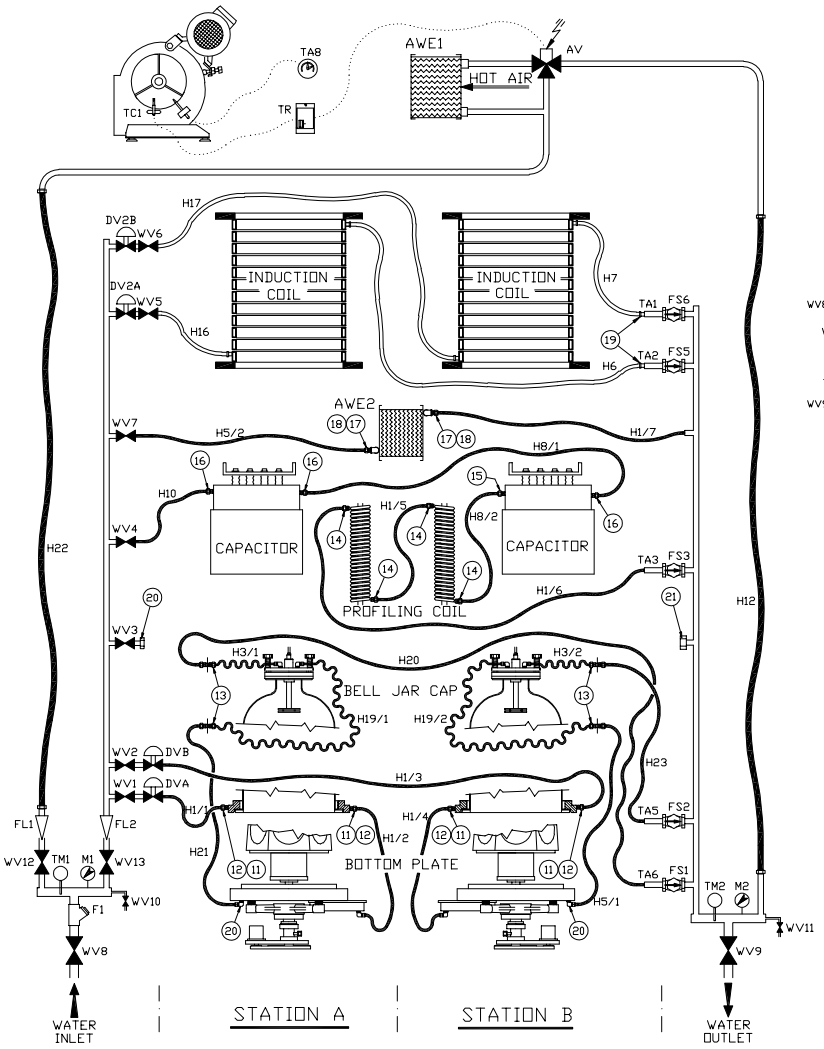

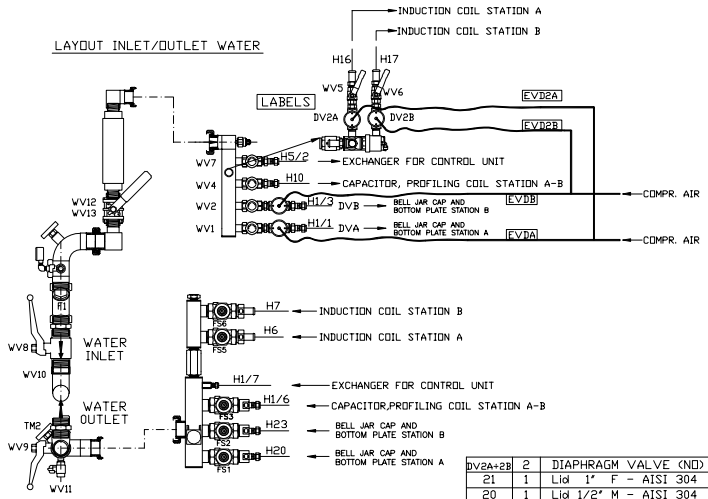

Item	Qty	Description	Code
DV2A+2B	2	DIAPHRAGM VALVE (ND) Mod. BD-15-S2	VA0120
21	1	Lid 1" F - AISI 304	RQ. . . .
20	1	Lid 1/2" M - AISI 304	RQ0005
19	8	Fascetta stringitubo da Ø24 a Ø36 h12 acc. inox	SS0009
18	2	90° Turn 1/2" M-F brass	RQ0151
17	2	Fitting Swagelok SS-600-6-6W a saldare	RA0153
16	3	Fitting Serto SD1121-10-1/4	RQ0240
15	1	Fitting to 90° Serto SD2421-10-1/4	RQ0391
14	4	Centering Ring Serto SDI-9,52	RQ0392
13	4	Fitting Swagelok SS-600-61 feedtroughs	RA0001
12	4	Fitting Swagelok SS-600-6 union	RA0042
11	4	Fitting Swagelok SS-600-1-4 male	RA0003
10	2	Fitting Swagelok SS-600-2-4 a gomito	RA0002
FL1÷2	2	FLOWMETER Mod. RG4 - 6mc/h	VA0010
TM1÷2	2	THERMOMETER ø60 - 60°C	TM0054
M1÷2	2	PRESSURE GAUGE 0÷6 bar - 1/8" RADIAL	MN0116
F1	1	FILTER 1 ¼" BRASS	RQ0149
WV12÷13	2	MANUAL VALVE 1" ST. ST. - BALL VALVE	3VA0021
WV10÷11	2	MANUAL VALVE 3/8" BRASS - BALL VALVE	VA0094
WV8÷9	2	MANUAL VALVE 1 ¼" BRASS - BALL VALVE	VA0031
WV5÷6	2	MANUAL VALVE 1/2" BRASS - BALL VALVE	VA0030
WV1÷7	5	MANUAL VALVE 1/2" BRASS - REGULATING	VA0139
DVA+B	2	DIAPHRAGM VALVE (ND) Mod. BD-15-S2	VA0120
AWE2	2	EXCHANGER FOR CONTROL UNIT	FQ0043
AWE1	1	AIR/WATER EXCHANGER	FQ0040
AV	1	VALVOLA A 3 VIE MXG461B25-8	VA0151
TA8	1	THERMAL SWITCH GAUGE 0÷80°C JUMO	See (Q-12)
TA1÷6	5	THERMAL SWITCH 60° CLICK TERM	TM0006
TR	1	THERMAL REGULATOR	See (Y-11)
TC1	1	THERMAL REGULATOR SENSOR	See (Q-59)
FS5÷6	2	FLOW SWITCH 19 l/min. Mod. FS200E 1" 020-2394	FQ0004
FS1÷4	3	FLOW SWITCH 4 l/min. Mod. FS200E 1" 020-2398	FQ0005
H21	1	RUBBER TUBE I.D. 10mm L=3500mm	RH4853H21
H20	1	RUBBER TUBE I.D. 10mm L=2800mm	RH4853H20
H19	2	TOP BELL FLEXIBLE HODE (st.st.)	RH4853H23
H17	1	INSULATING RUBBER HOSE ø18xø28 L=2100mm	RH4853H17
H16	1	INSULATING RUBBER HOSE ø18xø28 L=1100mm	RH4853H16
H12	1	RUBBER TUBE DN 25mm L=2130mm	RH4851H12
H23	1	RUBBER TUBE I.D. DN10mm L=4100mm	RH4853H23
H10	1	RUBBER TUBE I.D. 10mm L=1800mm	RH4853H10
H22	1	Tubo Gomma L=900 -1" Gas (Ingresso)	RH4851H22
H8	2	RUBBER TUBE I.D. 10mm L=1100mm	RH4853H8
H7	1	INSULATING RUBBER HOSE ø18xø28 L=2800mm	RH4853H7
H6	1	INSULATING RUBBER HOSE ø18xø28 L=1900mm	RH4853H6
H5	2	RUBBER TUBE I.D. 10mm L=3000mm	RH4853H5
H3	2	TOP BELL FLEXIBLE HODE (st.st.)	RH4853H3
H1	7	RUBBER TUBE I.D. 10mm L=2400mm	RH4853H1

H1/1...H1/7 IS REFERRED TO ITEM H1
H3/1, H3/2 IS REFERRED TO ITEM H3
H5/1, H5/2 IS REFERRED TO ITEM H5
H8/1, H8/2 IS REFERRED TO ITEM H8
H19/1, H19/2 IS REFERRED TO ITEM H19

Rev.05: modificata lunghezza tubo RH4853H6 (era 1600)	18/12/2013	Sis.ma
Modification description	Date	Prepared by

Measure without indication of tolerance | Treatment | Material

Prepared by: Alfredo Zamboni | Checked by: V.O. | Original date: 27/01/2004 | Checked by:

Title: WATER GROUP – PE 2061S
WATER SCHEMATIC COOLING SYSTEM

Sheet: 1/1 | Scale: A3

Approved by: D.C. | Latest rev: 05

Order No | Dwg No: RH4849U4 | Section | Group: T

LPE S.p.A. Powering the future

CONFIDENTIAL

This document and data disclosed herein is not to be reproduced used or disclosed in whole or in part to anyone without the permission of LPE S.p.A.

A2

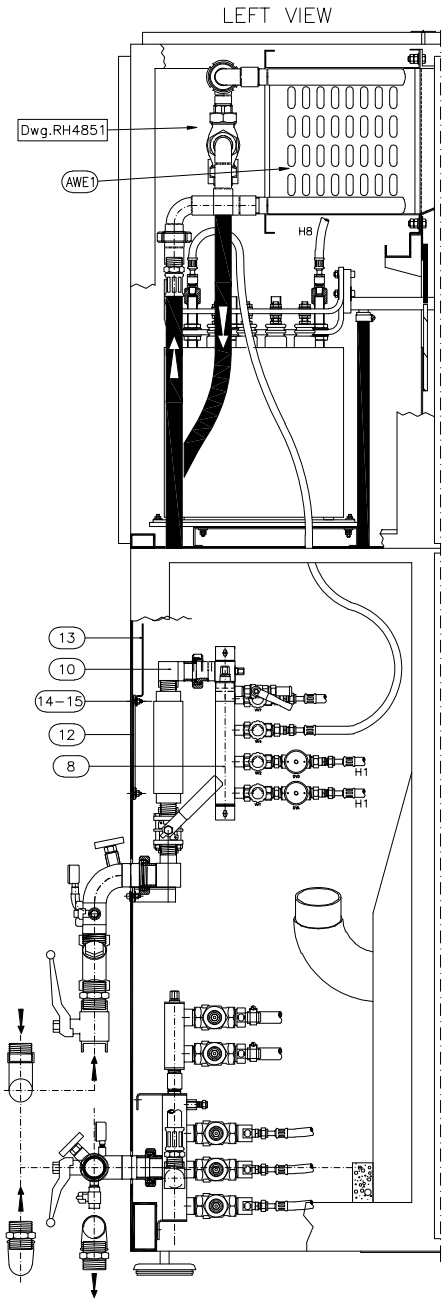

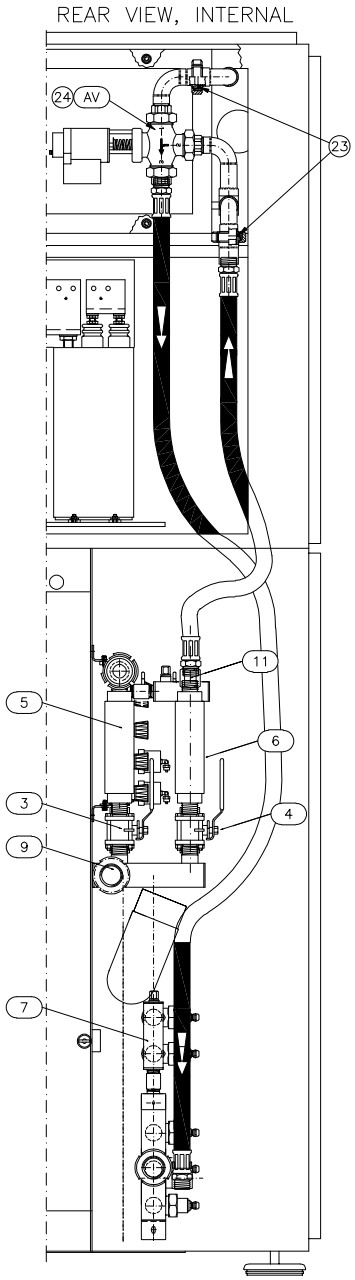

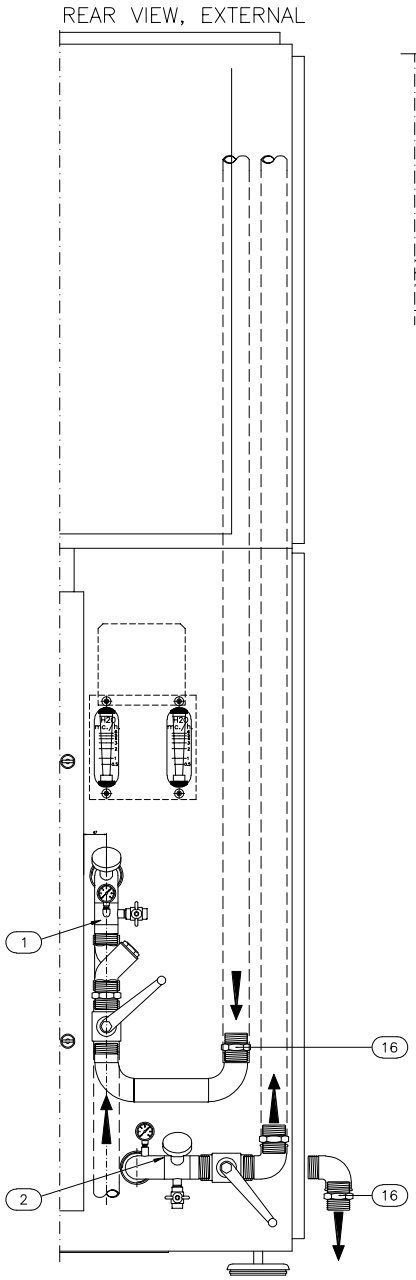

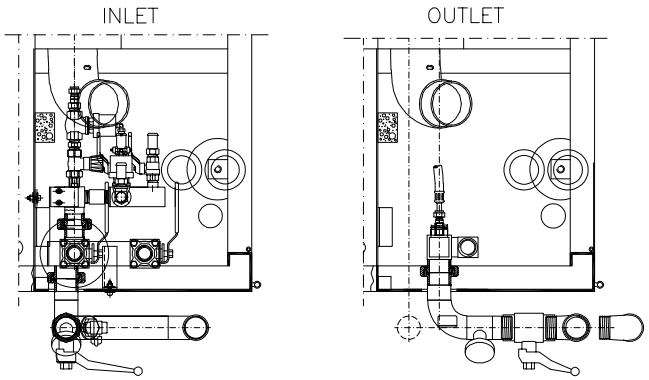

ANY EMERGENCY

Item	Qty	Description		Code
16	1	OPTIONAL: NIPPLE 1 1/2" MALE BSPP–NPT L=58	ALTERNATIVE	RQ0057
16	1	NIPPLE 1 1/2" MALE BSPP L=58		RQ0062
15	4	SELF LOCKING M4		DA0018
14	4	WASHER Ø4		RN0032
13	4	SUPPORT WATER PIPES		RH5500P2
12	1	PANEL		RH5500P1
11	1	HEXAGONAL SLEEVE 1" Gas		RH5503P2
10	1	ELBOW CONNECTING		RH5504
9	1	FLOW METER DISTRIBUTOR		RH5503
8	1	INLET WATER COLLECTOR		RH5502
7	1	OUTLET WATER COLLECTOR		RH5507
6	1	FL2: FLOW METER MOD. RG4 – 6mc/h		VA0010
5	1	FL1: FLOW METER MOD. RG4 – 6mc/h		VA0010
4	1	WV13: MANUAL VALVE 1" ST. ST. – BALL VALVE		VA0003
3	1	WV12: MANUAL VALVE 1" ST. ST. – BALL VALVE		VA0003
2	1	CONNECTING TO EXTERNAL OUTLET WATER		RH5506
1	1	CONNECTING TO EXTERNAL INLET WATER		RH5501

Measure without indication of tollerance	Treatment	Material

Prepared by	Checked by	Title	Sheet
L.G.	V.O.	LAYOUT WATER COOLING SYSTEM REACTOR PE 2061S	1/1
Original date 23/09/2003	Checked by N.S.		Scale A2
Approved by D.C.	Order No	Dwg No RH5500	Section / Group T
Latest rev 02	CONFIDENTIAL	This document and data disclosed herein is not to be reproduced used or disclosed in whole or in part to anyone without the permission of LPE S.p.A.	

LPE Powering the future

Modification description	Date	Prepared by
Rev.02 – General update	25/06/2010	A. Zamboni

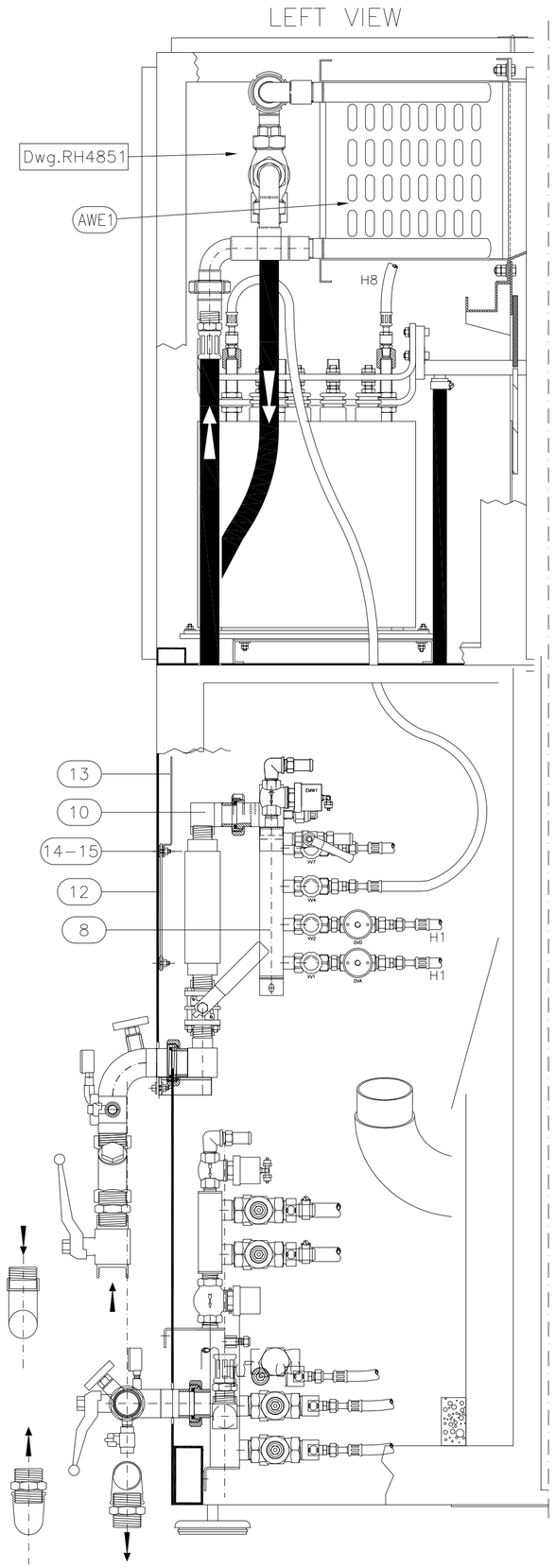

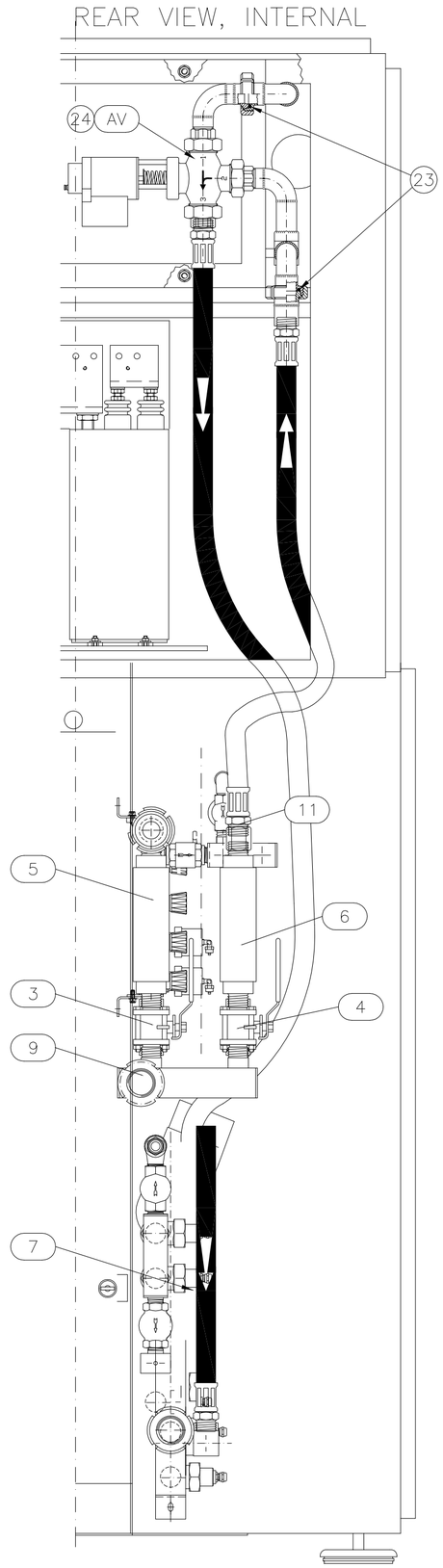

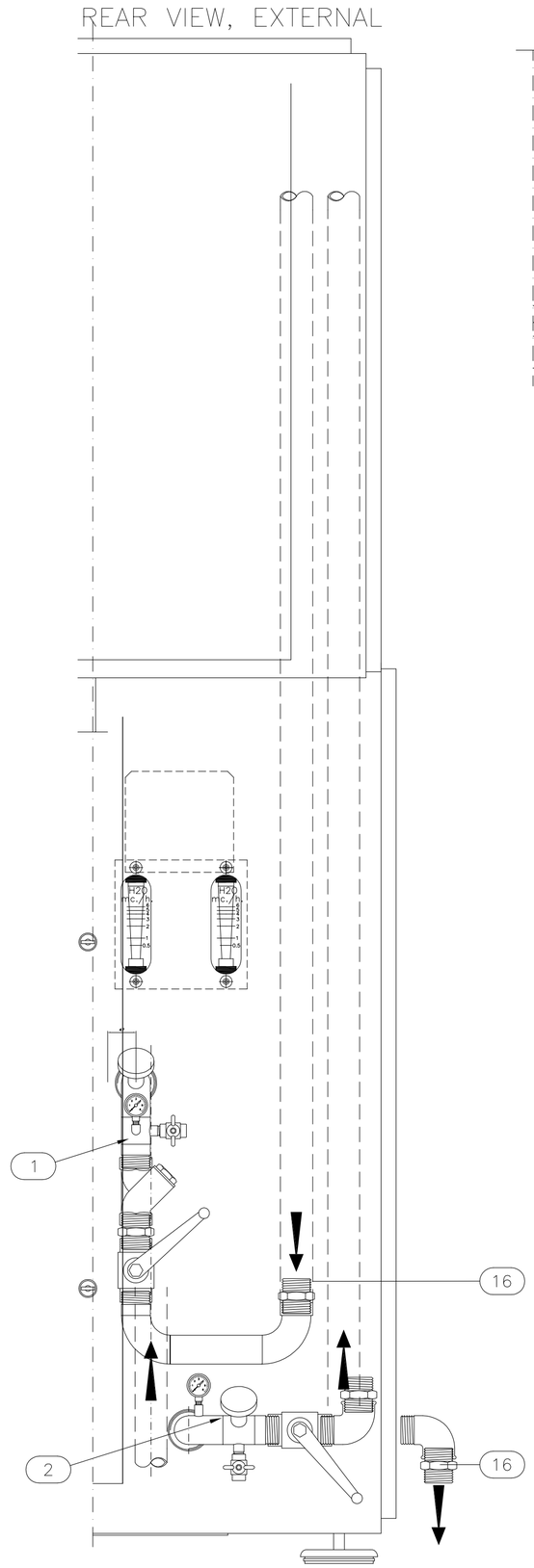

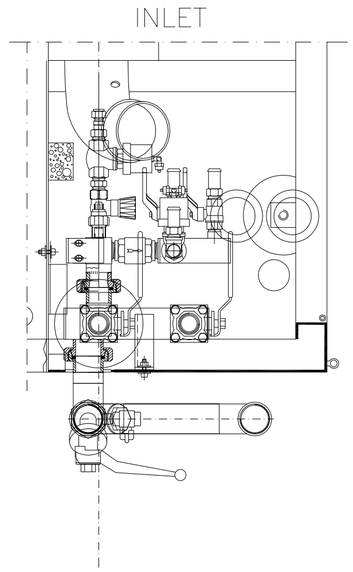

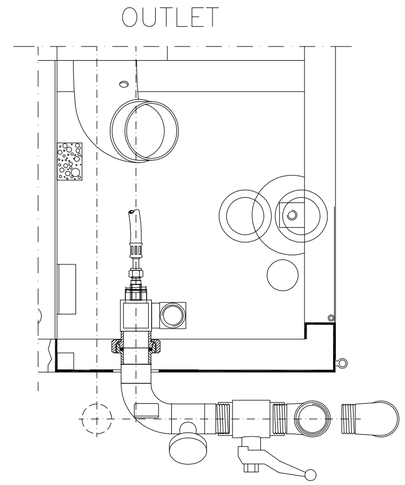

EMERGENCY EXECUTION

Item	Qty	Description		Code
16	1	OPTIONAL: NIPPLE 1 1/2" MALE BSPP–NPT L=58	ALTERNATIVE	RQ0057
16	1	NIPPLE 1 1/2" MALE BSPP L=58		RQ0062
15	4	SELF LOCKING M4		DA0018
14	4	WASHER Ø4		RN0032
13	4	SUPPORT WATER PIPES		RH5500P2
12	1	PANEL		RH5500P1
11	1	HEXAGONAL SLEEVE 1" Gas		RH5503P2
10	1	ELBOW CONNECTING		RH5504
9	1	FLOW METER DISTRIBUTOR		RH5503
8	1	INLET WATER COLLECTOR WITH EMERGENCY		RH5508
7	1	OUTLET WATER COLLECTOR WITH EMERGENCY		RH5509
6	1	FL2: FLOW METER MOD. RG4 – 6mc/h		VA0010
5	1	FL1: FLOW METER MOD. RG4 – 6mc/h		VA0010
4	1	WV13: MANUAL VALVE 1" ST. ST. – BALL VALVE		VA0003
3	1	WV12: MANUAL VALVE 1" ST. ST. – BALL VALVE		VA0003
2	1	CONNECTING TO EXTERNAL OUTLET WATER		RH5506
1	1	CONNECTING TO EXTERNAL INLET WATER		RH5501

Modification description	Date	Prepared by
Rev.02 – General update	25/06/2010	A. Zamboni

Measure without indication of tollerance

Treatment

Material: VEDI DISEGNO

Prepared by: L.G.

Checked by: V.O.

Original date: 23/09/2003

Checked by: N.S.

Approved by: D.C.

Latest rev: 02

Title: LAYOUT WATER COOLING SYSTEM
REACTOR PE 2061S

Sheet: 1/ 1

Scale: A2

Order No:

Dwg No: RH5510

Section:

Group: T

LPE SpA
Powering the future

CONFIDENTIAL

This document and data disclosed herein is not to be reproduced used or disclosed in whole or in part to anyone without the permission of LPE S.p.A.

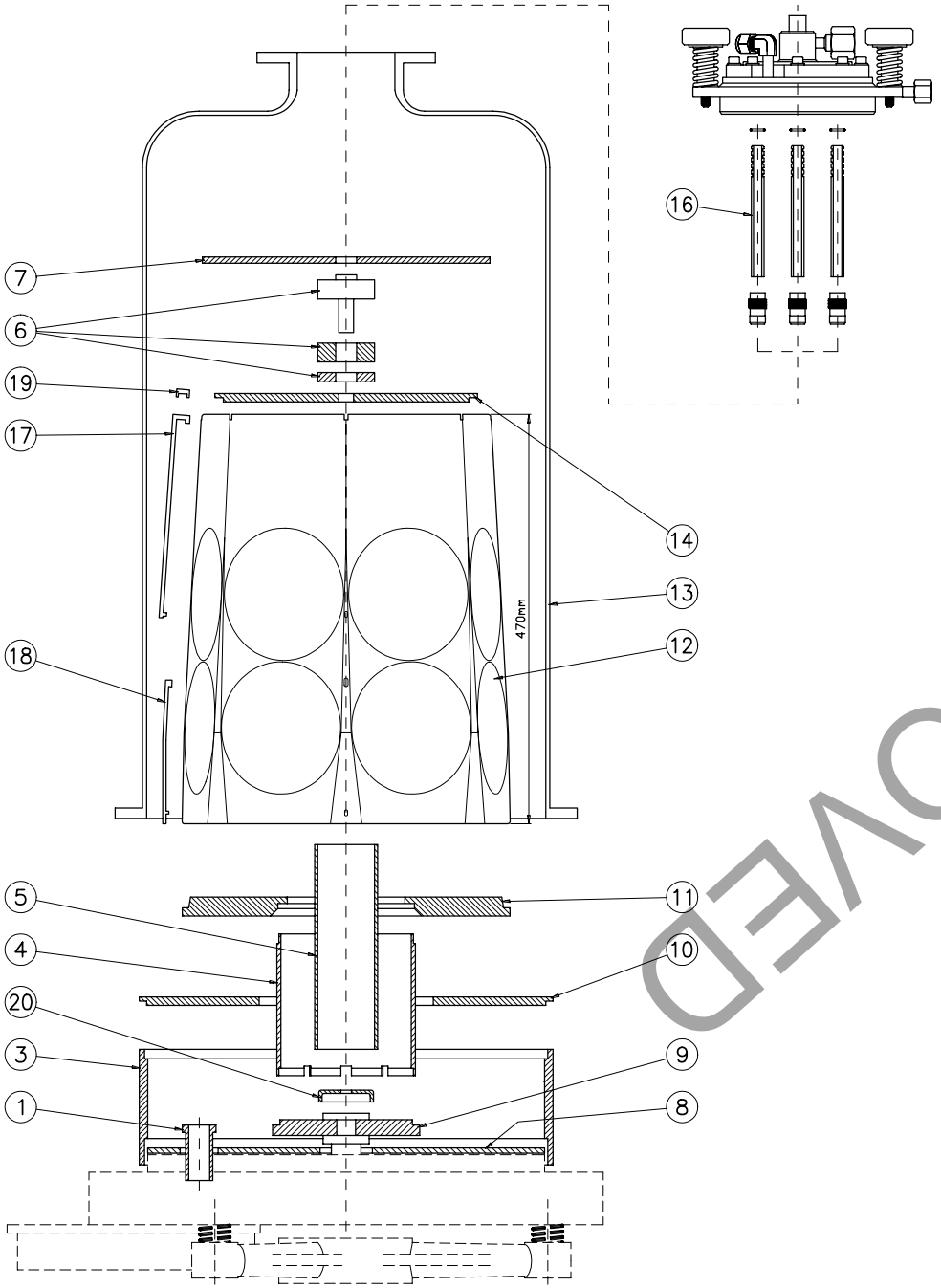

WAFER SIZE	ø75 mm	ø100mm	ø125mm	ø150mm	ø200mm
SUSCEPTOR BODY (STANDARD)	WQ5301	WQ5315 WQ5344 Rev.2	WQ5307	WQ5332	WQ5341
SUSCEPTOR BODY (LOW PRESSURE)			WQ5309		
SUPPORT	WQ5302	WQ5305	WQ5310	WQ5318	WQ5342
TOP	WQ5303 Rev.3	WQ5306 Rev.3	WQ5311 Rev.3	WQ5319 Rev.4	WQ5343 Rev.3
BAFFLE 4x4			WQ5314(8pcs)		
BAFFLE 4x6		WQ5166 Rev.2 (10pcs)		WQ5322(7pcs)	
LOWER BAFFLE 4x4				WQ5334(7pcs)	
PLUG			WQ5313(8pcs)		

Item	Qty	Description	Code
20	1	ROTATION CAP	WQ5363
19	seeTAB.	PLUG (see TAB.)	ON REQUEST
18	seeTAB.	LOWER BAFFLE (see TAB.)	ON REQUEST
17	seeTAB.	BAFFLE (see TAB.)	ON REQUEST
16	6	QUARTZ TUBE (H=125mm)	WQ5360
15			
14	1	TOP (see TAB.)	ON REQUEST
13	1	BELL JAR 16" (LOW PRESSURE)	WQ5362
	1	BELL JAR 16" (ATMOSPHERC PRESSURE)	WQ5359 Rev.3
12	1	SUSCEPTOR BODY (see TAB.)	ON REQUEST
11	1	SUPPORT (see TAB.)	ON REQUEST
10	1	QUARTZ TOP SHIELD	WQ5358 Rev.3
9	1	QUARTZ PLATE "PRECISION" thickness 18mm (see H-2)	WQ5357
8	1	QUARTZ BASE SHIELD (COUPLE OF HALF)	WQ5356 Rev.1
7	1	QUARTZ UPPER DISK (ø315mm)	WQ5352
6	1	QUARTZ UPPER SPACER KIT (H=20+20+10+5 mm)	WQ5361
5	1	EXHAUST PURGE TUBE	WQ5364
4	1	QUARTZ SUPPORT TUBE "PRECISION"	WQ5354
3	1	QUARTZ SPACER RING	WQ5355
2			
1	1	GRAPHITE TUBE	WQ5349

APPROVED

Modification description	Date	Prepared by
Correzione delle revisioni dei TOP	06/05/2006	PT

Measure without indication of tollerance

Treatment

Material

Prepared by: Alfredo Zamboni

Checked by: V. Ogliari

Original date: 27/07/2004

Checked by:

Approved by: D. Crippa

Latest rev: 16

Title: PE 2061S (total shield)

QUARTZ & GRAPHITE STUFF (16" BELL JAR)

Sheet: 1/ 1

Scale: A3

Order No

Dwg No: RH5150U1

Section

Group: V

LPE SpA Powering the future

CONFIDENTIAL

This document and data disclosed herein is not to be reproduced used or disclosed in whole or in part to anyone without the permission of LPE S.p.A.

Vol.5

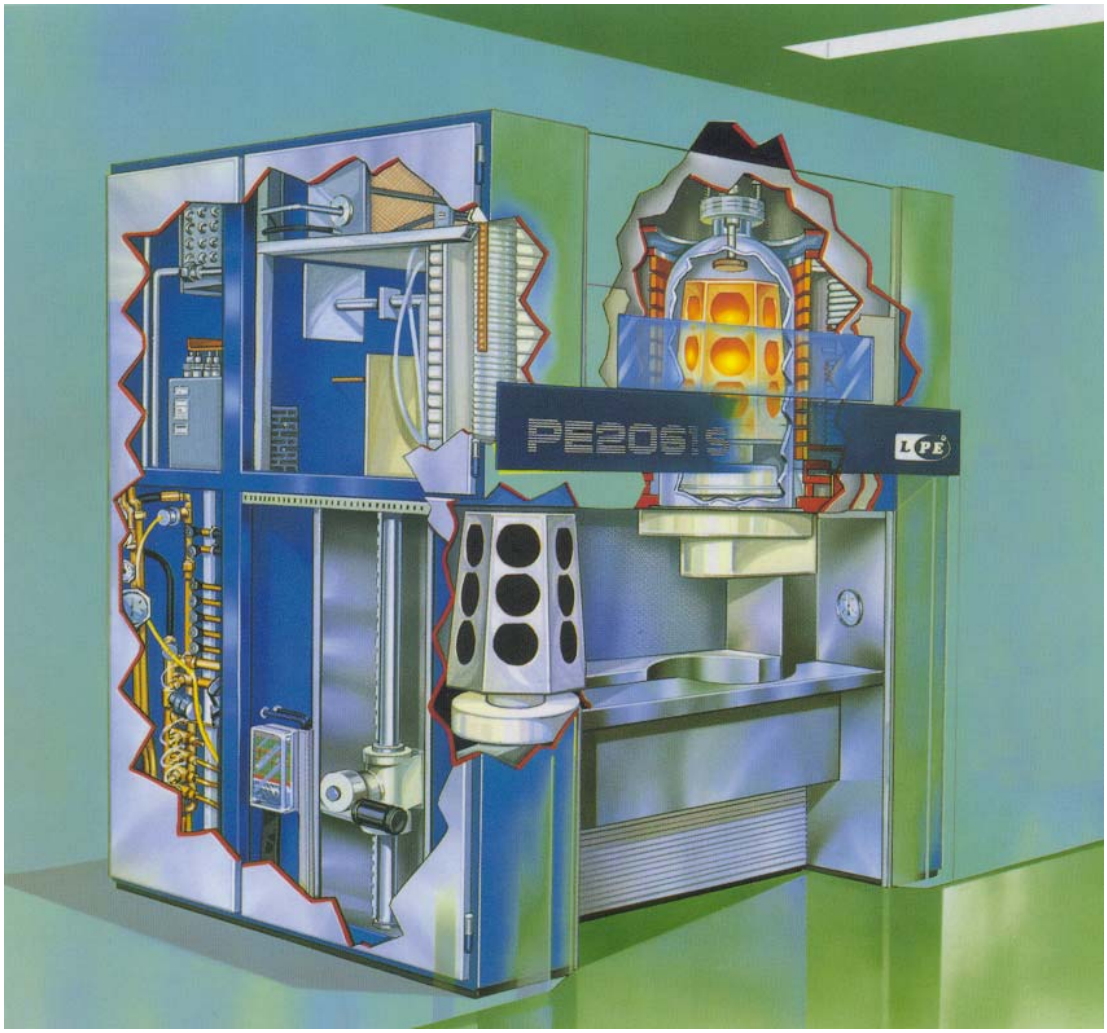

LPE S.p.A.
Powering the future

LPE s.p.a. - Via Falzarego, 8 - 20021 BARANZATE (MILAN) ITALY
Ph. ++39.02.3834151 - Fax ++39.02.38306118 - E-mail: info@lpe-epi.com

INSTRUCTION MANUAL

PE 2061 REL. #11 VOL.5

Chap. (27) Enclosures

Original version
ENGLISH

COPYRIGHT © 2002 **LPE EPITAXIAL TECHNOLOGY**
all rights reserved

No part of these Operating Instructions may be reproduced or used under any form or with any electronic or mechanical method including photocopying, recording with any other method, without the permission of the owner of the Copyright. The drawings are of exclusive ownership.

DESCRIPTION	LPE ITEM	ENCL. N°	ENCL. DESCRIPTION
epiconverter IFC 150/2	04J105	1a/b/c	Instruction manual
ups	3AC2200	3	Instruction manual
laminar flow blower	MV0014	4	Safety decl. - connection diagram
blower group's motor	MV0039	5	Safety inf. - connection diagram
step motor driver SE400.04.85.V33	AC1401	6	Instruction manual
lift motor	MV0017	7	Technical data
winder group's geared motor	MV0144	8	Technical data
power supply +24V	AC0029	10	Connection diagram
power supply +15V/-15V	AC0170	10	Connection diagram
power supply +20V	AC0200	10	Connection diagram
power supply +60V	AC0201	10	Connection diagram
velocity regulator RVM3E	EM1431	12	Safety inf. - connection diagram
flowcontroller	VA0200	20	Instruction manual
flowcontroller	VA0201	20	Instruction manual
flowcontroller	3VA0166	20	Instruction manual
flowcontroller	3VA0168	20	Instruction manual
flowcontroller	3VA0160	21	Instruction manual
flowcontroller	3VA0161/62	21	Instruction manual
flowcontroller	3VA0163	21	Instruction manual
flowcontroller	3VA0164	21	Instruction manual
valve	VA0111	23/1	Technical data
valve	VA0112	23/1	Technical data
valve	VA0113	23/1	Technical data
valve	VA0601	24	Technical data
valve	VA0602	24	Technical data
valve	VA0603	24	Technical data
valve	VA0604	24	Technical data
metering valve	VA0491	24	Technical data
metering valve	VA0606	24/1	Technical data
turn valve	VA0002	25	Instruction manual
valve	VA0644	26 bis	Technical data
pressure regulator	RG0047	28	Instruction manual
filter	FG0239	31	Instruction manual
filter	FG3004	32	Instruction manual
flowmeter	VA0009	33	Instruction manual
pressure switch	PQ0001	34	Instruction manual
pressure switch	PQ0018	34	Instruction manual
flow switch	FQ0004	35	Technical data
flow switch	FQ0005	35	Technical data
modulating control valve	VA0151	36	Instruction manual
pressure regulator	RG0006	37	Instruction manual
filter	PN0030	38	Instruction manual
electrovalve	PN0165	39	Technical data
pressure gauge	MN0610	40	Instruction manual
H2 leak sensor	SI0311	42	Instruction manual
photoelectric switch	OE0100	50	Technical data
photoelectric switch	OE0101	51	Technical data
proximity switch	RL0002	52	Instruction manual
proximity switch	RL0091	53	Instruction manual
safety switch	IN0100	54	Technical data
Proximity switch	PN0127	55	Technical data
safety switch	IN1132	56	Technical data
signal tower	OA0082	57	Technical data
Swagelok VCO Fittings	n.a.	58	Installation instructions
Swagelok VCR Fitting	n.a.	59	Installation instructions

Vol.6

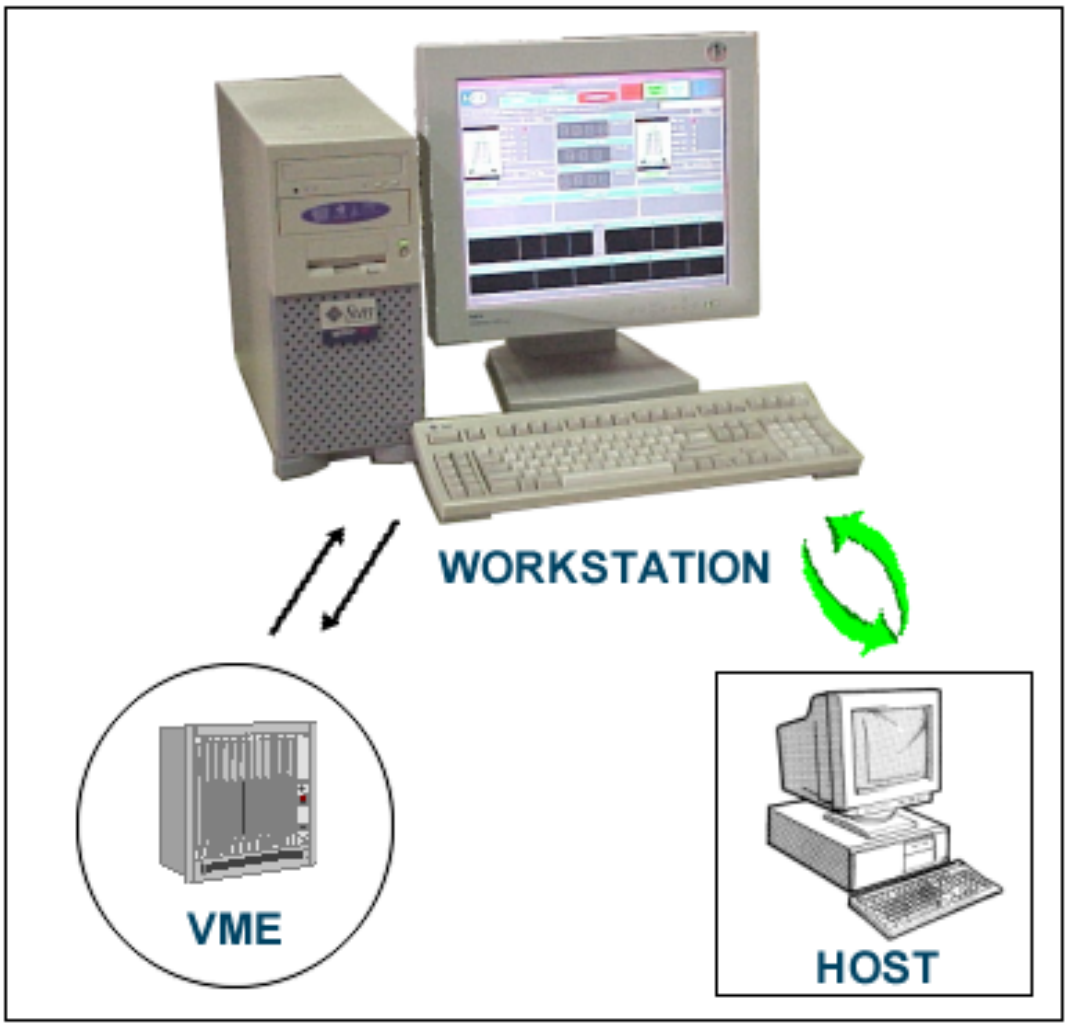

LPE S.p.A.
Powering the future

LPE s.p.a. - Via Falzarego, 8 - 20021 BOLLATE (MILAN) ITALY
Ph. ++39.02.3834151 - Fax ++39.02.38306118 - E-mail: info@lpe-epi.com

INSTRUCTION MANUAL

PE 2061 REL. #11 VOL.6

Chap. (28) Gem Secs
Chap. (29) Remote Terminal

Original version
ENGLISH

COPYRIGHT © 2002 **LPE EPITAXIAL TECHNOLOGY**
all rights reserved

No part of these Operating Instructions may be reproduced or used under any form or with any electronic or mechanical method including photocopying, recording with any other method, without the permission of the owner of the Copyright. The drawings are of exclusive ownership.

GEM/SECS - USER'S MANUAL

Valid from PE3061D GUI version 8.8#11 and from PE2061S GUI version 2.8#24

LPE S.p.A.
Via Falzarego, 8
20021 Baranzate (Milano) Italy
Tel. +39 02 38 34 15 1

MAN0053 - rev.11

INDEX

INDEX 2
GENERAL INFORMATION 4
SECS Capabilities Summary 4
Limits 4
CONFIGURATION ISSUES 5
Software environment 5
SECS Host 5
SECS Configuration 5
REACTOR SPECIFIC DATA 6
PE2061S 6
PE2061S - Alarms Configuration 6
PE2061S - Events Configuration 10
PE2061S - Equipment Constants Configuration 12
PE2061S - Status Variables Configuration 18
PE2061S - Remote Commands Configuration 27
PE3061D 28
PE3061D - Alarms Configuration 28
PE3061D - Events Configuration 32
PE3061D - Equipment Constants Configuration 34
PE3061D - Status Variables Configuration 38
PE3061D - Remote Commands Configuration 44
STATE MODELS 45
Communication Model 45
Communication State Transition Table 46
Control Model 48
Control State Transition Table 48
MESSAGES SUMMARY 50
Host to Equipment 50
Equipment to Host 51
DATA ITEM DICTIONARY 52
Notation 52
Item Format Table 52
SCENARIOS 65
Spooling Scenario 65
Terminal Services Scenario 66
Variable Data Collection Scenario 67
Status Data Collection Scenario 68
Enable Event Reporting Scenario 69
Equipment Reports Event Scenario 69
Dynamic Event Report Configuration Scenario 70
Host Requests Event Report Scenario 71
Host Sends Equipment Constants Scenario 71
Operator Changes Equipment Constants Scenario 72
Establish Communication Scenario 73
On-Line Identification Scenario 74
Process Program Request Scenario 74
Process Program Send Scenario 75
Process Program Delete Scenario 76
Current EPPD Request Scenario 76
Host Requests Alarm List Scenario 77
Alarm/Event Reporting Scenario 78
MESSAGES SUMMARY 80
SML Notation 80
Manual Notation 81
S1,F1 Are You There Request 82
S1,F2 On Line Data 82
S1,F3 Selected Equipment Status Request 83
S1,F4 Selected Equipment Status Data 83
S1,F11 Status Variable Namelist Request 84

S1,F12 Status Variable Namelist Reply ... 84
S1,F13 Establish Communications Request ... 85
S1,F14 Establish Communications Request Acknowledge ... 85
S1,F15 Request OFF-LINE ... 86
S1,F16 OFF-LINE Acknowledge ... 86
S1,F17 Request ON-LINE ... 87
S1,F18 ON-LINE Acknowledge ... 87
S2,F13 Equipment Constant Request ... 88
S2,F14 Equipment Constant Data ... 88
S2,F15 New Equipment Constant Send ... 89
S2,F16 New Equipment Constant Acknowledge ... 89
S2,F17 Date and Time Request ... 90
S2,F18 Date and Time Data ... 90
S2,F29 Equipment Constant Namelist Request ... 91
S2,F30 Equipment Constant Namelist ... 91
S2,F31 Date and Time Set Request ... 92
S2,F32 Date and Time Set Acknowledge ... 92
S2,F33 Define Report ... 93
S2,F34 Define Report Acknowledge ... 93
S2,F35 Link Event Report ... 94
S2,F36 Link Event Report Acknowledge ... 94
S2,F37 Enable/Disable Event Report ... 95
S2,F38 Enable/Disable Event Report Acknowledge ... 95
S2,F39 Multi-block Inquire ... 96
S2,F40 Multi-block Grant ... 96
S2,F41 Host Command Send ... 97
S2,F42 Host Command Acknowledge ... 97
S5,F1 Alarm Report Send ... 98
S5,F2 Alarm Report Acknowledge ... 98
S5,F3 Enable/Disable Alarm Send ... 99
S5,F4 Enable/Disable Alarm Acknowledge ... 99
S5,F5 List Alarms Request ... 100
S5,F6 List Alarm Data ... 100
S6,F11 Event Report Send ... 101
S6,F12 Event Report Acknowledge ... 101
S6,F15 Event Report Request ... 102
S6,F16 Event Report Data ... 102
S6,F19 Individual Report Request ... 103
S6,F20 Individual Report Data ... 103
S6,F23 Request Spooled Data ... 104
S6,F24 Request Spooled Data Acknowledgement Send ... 104
S7,F1 Process Program Load Inquire ... 105
S7,F2 Process Program Load Grant ... 105
S7,F3 Process Program Send ... 106
S7,F4 Process Program Acknowledge ... 106
S7,F5 Process Program Request ... 108
S7,F6 Process Program Data ... 108
S7,F17 Delete Process Program Send ... 109
S7,F18 Delete Process Program Acknowledge ... 109
S7,F19 Current EPPD Request ... 110
S7,F20 Current EPPD Data ... 110
S9,F1 Unrecognized Device ID ... 111
S9,F3 Unrecognized Stream Type ... 112
S9,F5 Unrecognized Function Type ... 113
S9,F7 Illegal Data ... 114
S9,F9 Transaction Timer Timeout ... 115
S10,F3 Terminal Display, Single ... 116
S10,F4 Terminal Display, Single Acknowledge ... 116
S10,F5 Terminal Display, Multi-Block ... 117
S10,F6 Terminal Display, Multi-block Acknowledge ... 117
NOTES ... 118

GENERAL INFORMATION

This document summarizes the top-level SECS software communication for Epitaxial Reactor PE2061 and PE3061D systems.

The SECS interface is a software subsystem which allows a Host computer to remotely monitor and/or control LPE Epitaxial Reactor PE2061 and PE3061D. The communication between Host and SECS interface is based on TCP/IP connection (HSMS).

SECS Capabilities Summary

Using the Epitaxial Reactor GEM SECS interface, in accordance with the GEM compliance table, a remote Host is capable of identifying the following information:

FUNDAMENTAL GEM REQUIREMENTS	IMPLEMENTED	GEM COMPLIANT
State Models	Yes	Yes
Equipment Processing State	Yes	Yes
S1. F13/F14 Scenarios	Yes	Yes
Event Notification	Yes	Yes
On-Line Notification	Yes	Yes
Error Messages	Yes	Yes
Documentation	Yes	Yes
ADDITIONAL CAPABILITIES	IMPLEMENTED	GEM COMPLIANT
Establish Communications	Yes	Yes
Dynamic Event Report Configuration	Yes	Yes
Variable Data Collection	Yes	Yes
Trace Data Collection	No	N.A.
Status Data Collection	Yes	Yes
Alarm Management	Yes	Yes
Remote Control	Yes	Yes
Equipment Constants	Yes	Yes
Process Program Management	Yes	Yes
Material Movement	N.A.	N.A.
Equipment Terminal Service	Yes	Yes
Limits Monitoring	Yes	Yes
Spooling	Yes	Yes

Limits

The SECS interface will deal with only one SECS transaction incoming from Host.
Serial communication through RS232 (SECS-I) has been abandoned.
Multiblock management of messages has been abandoned.

CONFIGURATION ISSUES

Software environment

The SECS interface has been developed for Microsoft Windows platform. It has been tested with Windows XP 32 bit, Windows 7 32bit, Windows 7 64bit. Even though not tested specifically on older Windows O.S., there is no reason to suspect any malfunctioning on Windows 2000 or Windows NT4.

SECS Host

The remote computer must act as a SECS Host, exchanging messages with the Epitaxial Reactor to control and/or monitor its functions.

SECS Configuration

The information that the end-user can modify are described in the following table:

Parameter Name	Description
Device ID	Machine SECS device id.
IP Port Local	Socket port number of the SECS interface machine.
Connection Mode	Communication mode. The HOST ***always*** estabilishes the TCP connection: ACTIVE, the EQUIPMENT sends S1F13 to start the SECS communication PASSIVE, the HOST sends S1F13 to start the SECS communication
HSMS T3	Reply Timeout.
HSMS T7	“NOT SELECTED” state connection Timeout.
Spool Max Msg	Maximum number of spooled messages. Set 0 to disable spooling
S1f1 Interval	Heartbeat E→H in seconds. Set 0 to disable heartbeat

REACTOR SPECIFIC DATA

PE2061S

PE2061S - Alarms Configuration

Alarm ID	Alarm Code	Description (PE2061S)	Gravity	Event ID on Alarm ON	Event ID on Alarm OFF
1	ID01	Press Bell A Warning	WARNING	10	303
2	ID02	Press Bell A Alarm	N2-ALARM	9	303
3	ID03	Thermal Sw Plate A	H2-ALARM	9	303
4	ID04	Flow Sw Plate A	H2-ALARM	9	303
5	ID05	Thermal Sw Coil A	H2-ALARM	9	303
6	ID06	Flow Sw Coil A	H2-ALARM	9	303
7	ID07	Thermal Sw Plate B	H2-ALARM	9	303
8	ID08	Flow Sw Plate B	H2-ALARM	9	303
9	ID09	Thermal Sw Coil B	H2-ALARM	9	303
10	ID10	Flow Sw Coil B	H2-ALARM	9	303
11	ID11	Thermal Sw Bell Cap A/B	H2-ALARM	9	303
12	ID12	Flow Sw Bells Cap A/B	H2-ALARM	9	303
13	ID13	Thermal Sw Capacitors	H2-ALARM	9	303
14	ID14	Flow Sw Capacitors	H2-ALARM	9	303
15	ID15	Thermal Sw Air	H2-ALARM	9	303
16	ID16	Safety Sw Lift A Port	NO ALARM	---	---
17	ID17	Emergency Water	H2-ALARM	9	303
18	ID18	Safety Sw Rp Port	WARNING	10	303
19	ID19	Limit Sw Lift Up A	NO ALARM	9	303
20	ID20	Limit Sw Lift Down A	NO ALARM	---	---
21	ID21	Lim.Sw Clamp A Closed-Int	NO ALARM	---	---
22	ID22	Lim.Sw Clamp A Closed-Est	NO ALARM	---	---
23	ID23	Clamp A Open	NO ALARM	---	---
24	ID24	Pedal A	NO ALARM	---	---
25	ID25	Reactor Leak Warning	WARNING	10	303
26	ID26	Reactor Leak Alarm	N2-ALARM	9	303
27	ID27	Gas Panel Leak Warning	WARNING	10	303
28	ID28	Gas Panel Leak Alarm	N2-ALARM	9	303
29	ID29	Blower Motor Thermal Sw	H2-ALARM	9	303
30	ID30	Laminar Flow	WARNING	10	303
31	ID31	Power Fail	H2-ALARM	9	303
32	ID32	Exhaust Air Sw	H2-ALARM	9	303
33	ID33	Thermal Sw Computer Air	WARNING	10	303
34	ID34	Leak Test A	N2-ALARM	9	303
35	ID35	Safety Sw Computer Port	WARNING	10	303
36	ID36	Leak Test B	N2-ALARM	9	303
37	ID37	Pressure Sw Spoiler	NO ALARM	---	---
38	ID38	Bubbler T.C. Out Of Range	WARNING	10	303
39	ID39	Scrubber Emission	WARNING	10	303
40	ID40	Leak Sensors Fault	WARNING	10	303
41	ID41	Press Bell B Warning	WARNING	9	303
42	ID42	Press Bell B Alarm	N2-ALARM	9	303
43	ID43	Press Sw Comp.Air	N2-ALARM	9	303
44	ID44	Bubbler 1/2/3 Alarm	H2-ALARM	9	303
45	ID45	Air Flow Sensor	H2-ALARM	9	303
46	ID46	Scrubber Trouble	N2-ALARM	9	303

Alarm ID	Alarm Code	Description (PE2061S)	Gravity	Event ID on Alarm ON	Event ID on Alarm OFF
47	ID47	Safety Sw Port A	N2-ALARM	9	303
48	ID48	Safety Sw Port B	N2-ALARM	9	303
49	ID49	Spoiler In A	NO ALARM	---	---
50	ID50	Spoiler In B	NO ALARM	---	---
51	ID51	Bubbler 1	NO ALARM	---	---
52	ID52	Bubbler 2	NO ALARM	---	---
53	ID53	Front Shield Closed	WARNING	10	303
54	ID54	N2 Vacuum Pump	H2-ALARM	9	303
55	ID55	Safety Sw Lift B Port	NO ALARM	---	---
56	ID56	Bubbler 3 Level	NO ALARM	---	---
57	ID57	Vacuum Pump Trouble	H2-ALARM	9	303
58	ID58	Comp.Air Vacuum Valves	N2-ALARM	9	303
59	ID59	Limit Sw Lift Up B	NO ALARM	---	---
60	ID60	Limit Sw Lift Down B	NO ALARM	---	---
61	ID61	Lim.Sw Clamp B Closed-Int	NO ALARM	---	---
62	ID62	Lim.Sw Clamp B Closed-Est	NO ALARM	---	---
63	ID63	Clamp B Open	NO ALARM	---	---
64	ID64	Pedal B	NO ALARM	---	---
65	AL65	Flowcontroller Warning	WARNING	10	303
66	AL66	Fc1 Trouble	WARNING OR H2-ALARM	10/9	303
67	AL67	Sx1 Trouble	WARNING OR H2-ALARM	10/9	303
68	AL68	Sx2 Trouble	WARNING OR H2-ALARM	10/9	303
69	AL69	Sx3 Trouble	WARNING OR H2-ALARM	10/9	303
70	AL70	Fc53 Trouble	WARNING OR H2-ALARM	10/9	303
71	AL71	Fc63 Trouble	WARNING OR H2-ALARM	10/9	303
72	AL72	Fc73 Trouble	WARNING OR H2-ALARM	10/9	303
73	AL73	Fc51 Trouble	WARNING OR H2-ALARM	10/9	303
74	AL74	Fc61 Trouble	WARNING OR H2-ALARM	10/9	303
75	AL75	Fc71 Trouble	WARNING OR H2-ALARM	10/9	303
76	AL76	Fc52 Trouble	WARNING OR H2-ALARM	10/9	303
77	AL77	Fc62 Trouble	WARNING OR H2-ALARM	10/9	303
78	AL78	Fc72 Trouble	WARNING OR H2-ALARM	10/9	303
79	AL79	Fc8 Trouble	WARNING OR H2-ALARM	10/9	303
80	AL80	Lift A Trouble	H2-ALARM	9	303
81	AL81	Lift B Trouble	H2-ALARM	9	303
82	AL82	Pyrometer A Trouble	H2-ALARM	9	303
83	AL83	Pyrometer B Trouble	H2-ALARM	9	303
84	AL84	Bubbler 1/2 Alarm	H2-ALARM	9	303
85	AL85	Bubbler 1 Empty	WARNING	10	303
86	AL86	Bubbler 2 Empty	WARNING	10	303
87	AL87	232 To Generator Error	H2-ALARM	9	303
88	AL88	Spoiler Trouble	H2-ALARM	9	303

Alarm ID	Alarm Code	Description (PE2061S)	Gravity	Event ID on Alarm ON	Event ID on Alarm OFF
89	AL89	Rotation A Trouble	H2-ALARM	9	303
90	AL90	Photocell A Trouble	H2-ALARM	9	303
91	AL91	Rotation B Trouble	H2-ALARM	9	303
92	AL92	Photocell B Trouble	H2-ALARM	9	303
93	AL93	Generator Trouble	H2-ALARM	9	303
94	AL94	Transfer Trouble	H2-ALARM	9	303
98	AL98	Power/Temp	WARNING OR H2-ALARM	10/9	303
99	AL99	Config.Lpe Destroyed	H2-ALARM	9	303
100	AL100	O_Ring A Leak	N2-ALARM	9	303
101	AL101	O_Ring B Leak	N2-ALARM	9	303
102	AL102	Temp.Not Reached	H2-ALARM	9	303
108	AL108	Zero Power	H2-ALARM	9	303
109	AL109	Emergency Water	H2-ALARM	9	303
112	AL112	Hcl Pressure	WARNING	10	303
113	AL113	Dope1 Pressure	WARNING	10	303
114	AL114	Dope2 Pressure	WARNING	10	303
115	AL115	Dope3 Pressure	WARNING	10	303
116	AL116	Bubbler Refill	WARNING	10	303
122	AL122	Bell A Over Temp	H2-ALARM	9	303
123	AL123	Bell B Over Temp	H2-ALARM	9	303
124	AL124	Bell A Temp Trouble	H2-ALARM	9	303
125	AL125	Bell B Temp Trouble	H2-ALARM	9	303
126	AL126	Low Press Trouble	H2-ALARM	9	303
127	AL127	Low Press Trouble	H2-ALARM	9	303
128	AL128	Power Limit	WARNING OR H2-ALARM	10/9	303
129	AL129	Silicon Drum Empty	WARNING	10	303
130	AL130	Hclfast Trouble	WARNING OR H2-ALARM	10/9	303
131	AL131	Low Press Not Reach	H2-ALARM	9	303
132	AL132	Low Press Check Failed	NO ALARM	---	---
133	AL133	Low Press Not Reach	H2-ALARM	9	303
134	AL134	Low Press Check Failed	NO ALARM	---	---
135	AL135	Low Press Test Skip	WARNING	10	303
136	AL136	Low Press Test Skip	WARNING	10	303
137	AL137	Max Power	H2-ALARM	9	303
138	AL138	Rot A Cpu Watch-Dog	H2-ALARM	9	303
139	AL139	Rot B Cpu Watch-Dog	H2-ALARM	9	303
140	AL140	Press Too Low A Warning	WARNING	10	303
141	AL141	Press Too Low B Warning	WARNING	10	303
160	AL160	Generator Eeprom Ko	H2-ALARM	9	303
161	AL161	Generator Eeprom Error	H2-ALARM	9	303
162	AL162	Generator Ram Cmos Ko	H2-ALARM	9	303
163	AL163	Generator Low Line Voltage	H2-ALARM	9	303
164	AL164	Generator High Line Voltage	H2-ALARM	9	303
165	AL165	Generator Low Temperature	H2-ALARM	9	303
166	AL166	Generator High Temperature	H2-ALARM	9	303
167	AL167	Generator Mf Overvoltage	H2-ALARM	9	303
168	AL168	Generator Cc Overvoltage	H2-ALARM	9	303
169	AL169	Generator Bar Voltage Ko	H2-ALARM	9	303
170	AL170	Generator Emerg Push-But	H2-ALARM	9	303
171	AL171	Generator External Alarm	H2-ALARM	9	303
172	AL172	Generator Igbt Protection	H2-ALARM	9	303
173	AL173	Generator Inv Therm.Prot	H2-ALARM	9	303

Alarm ID	Alarm Code	Description (PE2061S)	Gravity	Event ID on Alarm ON	Event ID on Alarm OFF
174	AL174	Generator Inverter Overc	H2-ALARM	9	303
175	AL175	Generator Inv.Fans Therm.Sw	H2-ALARM	9	303
176	AL176	Generator Ind.Therm.Prot	H2-ALARM	9	303
177	AL177	Generator Water Flow Sw	H2-ALARM	9	303
178	AL178	Generator Cabinet Overtemp	H2-ALARM	9	303
179	AL179	Generator Earth Loss Insulat	H2-ALARM	9	303
180	AL180	Generator Cabinet Fan Th.Sw	H2-ALARM	9	303
181	AL181	Generator Not used	H2-ALARM	9	303
182	AL182	Generator Not used	H2-ALARM	9	303
183	AL183	Generator Not used	H2-ALARM	9	303
184	AL184	Generator Ac/Dc Conv.Overc	H2-ALARM	9	303
185	AL185	Generator Ac/Dc Conv.Overl	H2-ALARM	9	303
186	AL186	Generator Thermal Prot	H2-ALARM	9	303
187	AL187	Generator Breaking Overload	H2-ALARM	9	303
188	AL188	Generator Starting Overload	H2-ALARM	9	303
189	AL189	Generator Phases Loss/Minvo	H2-ALARM	9	303
190	AL190	Generator W.D.Tx From Mux	H2-ALARM	9	303
191	AL191	Generator W.D.Tx From 452l	H2-ALARM	9	303

PE2061S - Events Configuration

Event ID	Name	Description (PE2061S)
1	1	Status NOCONF (communication with controller lost)
2	2	Status FREE BELL A
3	3	Status RUN BELL A
4	4	Status ABORT BELL A
5	5	Status HOLD BELL A
6	6	Status POST BELL A
7	7	Status WAIT BELL A
8	8	Status STOP BELL A
9	9	Status ALARM BELL A
10	10	Status WARNING BELL A
100	100	Phase PRE N2 BELL A
101	101	Phase PRE H2 BELL A
104	104	Phase PROCESS BELL A
105	105	Phase POH2 BELL A
106	106	Phase PON2 BELL A
107	107	Phase WAIT BELL A
108	108	Phase HOLD BELL A
200	200	Generator Status ON BELL A
201	201	Generator Status OFF BELL A
208	208	Rotation Running BELL A
209	209	Rotation Stopped BELL A
210	210	Reactor REMOTE
211	211	Reactor LOCAL
212	212	Reactor In of Maintanace BELL A
213	213	Reactor Out of Maintanace BELL A
300	300	Modified Configuration
301	301	Read Message From Host
302	302	Insert Lot
303	303	Reset All Alarm
1000	Spooling Activated	Spooling Activated
1001	Spooling Deactivated	Spooling Deactivated
1002	Spooling Transmit Failure	Spooling Transmit Failure
20002	20002	Status FREE BELL B
20003	20003	Status RUN BELL B
20004	20004	Status ABORT BELL B
20005	20005	Status HOLD BELL B
20006	20006	Status POST BELL B
20007	20007	Status WAIT BELL B
20008	20008	Status STOP BELL B
20009	20009	Status ALARM BELL B
20010	20010	Status WARNING BELL B
20100	20100	Phase PRE N2 BELL B
20101	20101	Phase PRE H2 BELL B
20104	20104	Phase PROCESS BELL B
20105	20105	Phase POH2 BELL B
20106	20106	Phase PON2 BELL B
20107	20107	Phase WAIT BELL B
20108	20108	Phase HOLD BELL B
20200	20200	Generator Status ON BELL B
20201	20201	Generator Status OFF BELL B

Event ID	Name	Description (PE2061S)
20208	20208	Rotation Running BELL B
20209	20209	Rotation Stopped BELL B
20212	20212	Reactor In of Maintanace BELL B
20213	20213	Reactor Out of Maintanace BELL B

PE2061S - Equipment Constants Configuration

ECID	Name	Type	Description (PE2061S)	Read Write
1	MFC_H2_MAIN_AB	U4	H2 Main Range	R
2	MFC_SOURCE_1	U4	Source 1 Range	R
3	MFC_SOURCE_2	U4	Source 2 Range	R
4	MFC_SOURCE_3	U4	Source 3 Range	R
5	MFC_DOPE_1	U4	Dope 1 Range	R
6	MFC_DOPE_2	U4	Dope 2 Range	R
7	MFC_DOPE_3	U4	Dope 3 Range	R
8	MFC_DILUTE_1	U4	Dilute 1 Range	R
9	MFC_DILUTE_2	U4	Dilute 2 Range	R
10	MFC_DILUTE_3	U4	Dilute 3 Range	R
11	MFC_INJECT_1	U4	Inject 1 Range	R
12	MFC_INJECT_2	U4	Inject 2 Range	R
13	MFC_INJECT_3	U4	Inject 3 Range	R
14	MFC_HCL	U4	HCl Range	R
15	MFC_N2_AB	U4	N2 A/B Range	R
16	MFC_H2_PURGE_AB	U4	H2 Purge A/B Range	R
17	MFC_HCL_FAST	U4	HCl Fast Range	R
18	MFC_TEMP	U4	Temp Range	R
19	MFC_POWER	U4	Power Range	R
20	MFC_PRESS	U4	Press Range	R
21	MFC_HCL_FC85	U4	HCL on FC85	
22	MFC_H2_FC17	U4	H2 on FC17	
101	GIP_HCL_MIN	U4	HCl min pressure	R
102	GIP_HCL_MAX	U4	HCl max pressure	R
103	GIP_DOPE1_MIN	U4	Dope 1 min pressure	R
104	GIP_DOPE1_MAX	U4	Dope 1 max pressure	R
105	GIP_DOPE2_MIN	U4	Dope 2 min pressure	R
106	GIP_DOPE2_MAX	U4	Dope 2 max pressure	R
107	GIP_DOPE3_MIN	U4	Dope 3 min pressure	R
108	GIP_DOPE3_MAX	U4	Dope 3 max pressure	R
201	PWA_PRESS_A_WNG	U4	Press A Warning	R
202	PWA_PRESS_A_ALM	U4	Press A Alarm	R
203	PWA_PRESS_B_WNG	U4	Press B Warning	R
204	PWA_PRESS_B_ALM	U4	Press B Alarm	R
205	PWA_RP_ALLOWED_ERR	U4	Low Press Allowed Error	R
206	PWA_RP_SLOW_PUMP_VALUE	U4	Slow Pump Value	R
207	PWA_RPTEST_RAMP_END_VALUE	U4	Ramp End Value	R
208	PWA_RPTEST_ALLOWED_DELTA	U4	Allowed Delta Pressure	R
209	PWA_RPTEST_TIMEOUT	U4	Test Timeout	R
210	PWA_RPTEST_FREQ	A	Test Frequency	R
301	PURGE_TIME_PRE_N2	U4	Time (180 sec)	R
302	PURGE_FLOW_PRE_N2	U4	Flow (50 slm)	R
303	PURGE_TIME_PRE_H2	U4	Time (180 sec)	R
304	PURGE_FLOW_PRE_H2	U4	Flow (50 slm)	R
305	PURGE_TIME_POST_H2	U4	Time (480 sec)	R
306	PURGE_FLOW_POST_H2	U4	Flow (50 slm)	R

ECID	Name	Type	Description (PE2061S)	Read Write
307	PURGE_TIME_POST_N2	U4	Time (720 sec)	R
308	PURGE_FLOW_POST_N2	U4	Flow (50 slm)	R
309	PURGE_RAMP	U4	Pre H2 Power Ramp Time (360 sec)	R
310	PURGE_STAB	U4	Pre H2 Power Stab Value (100 Kw)	R
401	AME_H2_MAIN_SET_HEAT_UP	U4	H2 Main set (Heat Up)	R
402	AME_POWER_RAMP_TIME	U4	Ramp time for power	R
403	AME_POWER_RAMP_END_VALUE	U4	End value for power ramp	R
404	AME_TEMP_RAMP_TIME	U4	Ramp time for temperature heat up	R
405	AME_VENT_TIME	U4	Vent time	R
406	AME_H2TEMP_RAMP_TIME	U4	H2/Temp ramp time	R
407	AME_H2TEMP_STAB_TIME	U4	H2/Temp stab time	R
408	AME_H2_MAIN_SET_STEP_END	U4	H2 Main set (step end)	R
409	AME_H2END_RAMP_TIME	U4	H2/End ramp time	R
501	PAR_FLOWSW_THERMALSW_DELAY	U4	Flow sw. and Thermal sw. delay	R
502	PAR_MFC_TIMEOUT	U4	Mass flow controllers time out	R
503	PAR_MFC_ALLOWED_ERR	U4	Mass flow controllers allowed error	R
504	PAR_AUTO_SX_SWITCH	U4	Automatic SX1/SX2 switch	R
505	PAR_MIN_SX_DRUM_WEIGHT	U4	Minimum Silicon drum weight	R
506	PAR_LATE_LOAD_WARNING_DELTA	U4	Late load warning to operator	
507	PAR_LOAD_LEV_A	F4	Loading level Bell A	R
508	PAR_LOAD_LEV_B	F4	Loading level Bell B	R
509	PAR_MFC_SXTIMEOUT	U4	MFC Timeout specific for silicon source	
510	PAR_PRE_N2_INACTIVITY	U4	Inactivity time to start N2 Saving	
511	PAR_MFC_DISABLE_DEP_WARNING	U4	Disable MFC warning during deposition	
601	PCA_POW_0800	U4	800 - Power	R
602	PCA_TEM_0800	U4	800 - Real T.	R
603	PCA_POW_0850	U4	850 - Power	R
604	PCA_TEM_0850	U4	850 - Real T.	R
605	PCA_POW_0900	U4	900 - Power	R
606	PCA_TEM_0900	U4	900 - Real T.	R
607	PCA_POW_0950	U4	950 - Power	R
608	PCA_TEM_0950	U4	950 - Real T.	R
609	PCA_POW_1000	U4	1000 - Power	R
610	PCA_TEM_1000	U4	1000 - Real T.	R
611	PCA_POW_1050	U4	1050 - Power	R
612	PCA_TEM_1050	U4	1050 - Real T.	R
613	PCA_POW_1100	U4	1100 - Power	R
614	PCA_TEM_1100	U4	1100 - Real T.	R
615	PCA_POW_1150	U4	1150 - Power	R
616	PCA_TEM_1150	U4	1150 - Real T.	R
617	PCA_POW_1200	U4	1200 - Power	R
618	PCA_TEM_1200	U4	1200 - Real T.	R
619	PCA_POW_1250	U4	1250 - Power	R
620	PCA_TEM_1250	U4	1250 - Real T.	R
701	PCB_POW_0800	U4	800 - Power	R
702	PCB_TEM_0800	U4	800 - Real T.	R
703	PCB_POW_0850	U4	850 - Power	R
704	PCB_TEM_0850	U4	850 - Real T.	R
705	PCB_POW_0900	U4	900 - Power	R

ECID	Name	Type	Description (PE2061S)	Read Write
706	PCB_TEM_0900	U4	900 - Real T.	R
707	PCB_POW_0950	U4	950 - Power	R
708	PCB_TEM_0950	U4	950 - Real T.	R
709	PCB_POW_1000	U4	1000 - Power	R
710	PCB_TEM_1000	U4	1000 - Real T.	R
711	PCB_POW_1050	U4	1050 - Power	R
712	PCB_TEM_1050	U4	1050 - Real T.	R
713	PCB_POW_1100	U4	1100 - Power	R
714	PCB_TEM_1100	U4	1100 - Real T.	R
715	PCB_POW_1150	U4	1150 - Power	R
716	PCB_TEM_1150	U4	1150 - Real T.	R
717	PCB_POW_1200	U4	1200 - Power	R
718	PCB_TEM_1200	U4	1200 - Real T.	R
719	PCB_POW_1250	U4	1250 - Power	R
720	PCB_TEM_1250	U4	1250 - Real T.	R
1001	DEF_ROT_CLOCK_ROT_SPEED_A	F4	Clockwise Rotation Speed A	R
1002	DEF_ROT_CLOCK_ROT_INV_A	F4	Clockwise Rotation Inversion Time A	R
1003	DEF_ROT_CLOCK_COUNTER_SPEED_A	F4	Counter-Clockwise Rotation Speed A	R
1004	DEF_ROT_CLOCK_COUNTER_INV_A	F4	Counter-Clockwise Rotation Inversion Time A	R
1005	DEF_ROT_CLOCK_ROT_SPEED_B	F4	Clockwise Rotation Speed B	R
1006	DEF_ROT_CLOCK_ROT_INV_B	F4	Clockwise Rotation Inversion Time B	R
1007	DEF_ROT_CLOCK_COUNTER_SPEED_B	F4	Counter-Clockwise Rotation Speed B	R
1008	DEF_ROT_CLOCK_COUNTER_INV_B	F4	Counter-Clockwise Rotation Inversion Time B	R
1009	DEF_ROT_PADLOCK	A or Bool	Rotation PadLock	R
2001	ROP_S_TYPE_01	A	SOURCE 1 Option	R
2002	ROP_S_TYPE_02	A	SOURCE 2 Option	R
2003	ROP_S_TYPE_03	A	SOURCE 3 Option	R
2008	ROP_SAVE_A_B	A	Save A/BOption	R
2009	ROP_EXECUTABLE	A	Recipe ExecutableOption	R
2004	ROP_LOW_PRESS_SYS	A	Low Pressure SystemOption	R
2005	ROP_SECS_01	A	SECS Option	R
2006	ROP_BUBBLER_REF	A	Bubbler Refill Option	R
2007	ROP_SMART_DOPANTS	A	Smart Dopants Option	R
2010	ROP_DATA_MONITORING	A	Data Monitoring Option	R
2021	ROP_TIME_MODE	A	Time format Option	R
2011	ROP_DOPE1	A	DOPE 1 Option	R
2012	ROP_DOPE2	A	DOPE 2 Option	R
2013	ROP_DOPE3	A	DOPE 3 Option	R
2014	ROP_PE2061_GEN_TYPE	A	Generator Type	R
2015	ROP_PE2061_REACTOR_TYPE	A	Reactor Type	R
2016	ROP_HCL_FAST	A	HCl Fast Option	R
2017	ROP_RUN_MENU	A	Run Menu Under Password Option	R
2018	ROP_SET_ROT	A	Set Rotation Parameters Option	R
2019	ROP_CONSOLE_SWITCH	A	Console Switching System Option	R
2020	ROP_RING_LEAK	A	O-Ring Leak Test Option	R
2021	ROP_TIME_MODE	A	Mm:ss or mm:tt Option	R
2022	ROP_SPOILEROFF	A	Spoiler Option	R
2023	ROP_NEWGASPANEL	A	FC85 and FC17 Option	R
2024	ROP_LONGCOIL	A	Long Coil Option	R

ECID	Name	Type	Description (PE2061S)	Read Write
2027	ROP_BUBBLER_REF_ALARM_LEV	A	Bubble Refill Alarm Level Option	R
2028	ROP_BUBBLER_REF_TIMEOUT	A	Bubbler Refill Timeout	R
2029	ROP_PYRO_TYPE	A	Pyrometer Type Option	R
2101	ALARM_01	U4	Press bell a warning d.i. alarm level alarm lev	R
2102	ALARM_02	U4	Press bell a alarm d.i. alarm level	R
2103	ALARM_03	U4	Thermal switch plate a d.i. alarm level	R
2104	ALARM_04	U4	Flow switch plate a d.i. alarm level	R
2105	ALARM_05	U4	Thermal switch coil a d.i. alarm level	R
2106	ALARM_06	U4	Flow switch coil a d.i. alarm level	R
2107	ALARM_07	U4	Thermal switch plate b d.i. alarm level	R
2108	ALARM_08	U4	Flow switch plate b d.i. alarm level	R
2109	ALARM_09	U4	Thermal switch coil b d.i. alarm level	R
2110	ALARM_10	U4	Flow switch coil b d.i. alarm level	R
2111	ALARM_11	U4	Thermal switch bell caps a/b d.i. alarm level	R
2112	ALARM_12	U4	Flow switch bell caps a/b d.i. alarm level	R
2113	ALARM_13	U4	Thermal switch capacitors d.i. alarm level	R
2114	ALARM_14	U4	Flow switch capacitors d.i. alarm level	R
2115	ALARM_15	U4	Thermal switch cooling air d.i. alarm level	R
2116	ALARM_16	U4	Lift a port/quartz guard shield d.i. alarm level	R
2117	ALARM_17	U4	Emergency water d.i. alarm level	R
2118	ALARM_18	U4	Safety sw rp port d.i. alarm level	R
2119	ALARM_19	U4	Limit switch lift up a d.i. alarm level	R
2120	ALARM_20	U4	Limit switch lift down a d.i. alarm level	R
2121	ALARM_21	U4	Limit switch clamp a closed int d.i. alarm level	R
2122	ALARM_22	U4	Limit switch clamp a closed ext d.i. alarm level	R
2123	ALARM_23	U4	Clamp a open d.i. alarm level	R
2124	ALARM_24	U4	Rotation foot switch a d.i. alarm level	R
2125	ALARM_25	U4	Reactor h2 leak warning d.i. alarm level	R
2126	ALARM_26	U4	Reactor h2 leak alarm d.i. alarm level	R
2127	ALARM_27	U4	Gas panel h2 leak warning d.i. alarm level	R
2128	ALARM_28	U4	Gas panel h2 leak alarm d.i. alarm level	R
2129	ALARM_29	U4	Blower motor thermal switch d.i. alarm level	R
2130	ALARM_30	U4	Laminar flow pressure switch d.i. alarm level	R
2131	ALARM_31	U4	Power fail d.i. alarm level	R
2132	ALARM_32	U4	Exhaust air vacuum switch d.i. alarm level	R
2133	ALARM_33	U4	Thermal switch computer air d.i. alarm level	R
2134	ALARM_34	U4	O-ring leak test a d.i. alarm level	R
2135	ALARM_35	U4	Safety switch computer port d.i. alarm level	R
2136	ALARM_36	U4	O-ring leak test b d.i. alarm level	R
2137	ALARM_37	U4	Pressure switch spoiler d.i. alarm level	R
2138	ALARM_38	U4	Bubbler t.c. out of range d.i. alarm level	R
2139	ALARM_39	U4	Scrubber emission d.i. alarm level	R
2140	ALARM_40	U4	H2 leak detectors fault d.i. alarm level	R
2141	ALARM_41	U4	Press bell b warning d.i. alarm level	R
2142	ALARM_42	U4	Press bell b alarm d.i. alarm level	R
2143	ALARM_43	U4	Compressed air pressure switch d.i. alarm level	R

ECID	Name	Type	Description (PE2061S)	Read Write
2144	ALARM_44	U4	Bubblers 1/2/3 alarm d.i. alarm level	R
2145	ALARM_45	U4	Air flow sensor d.i. alarm level	R
2146	ALARM_46	U4	Scrubber trouble d.i. alarm level	R
2147	ALARM_47	U4	Safety switches port a d.i. alarm level	R
2148	ALARM_48	U4	Safety switches port b d.i. alarm level	R
2149	ALARM_49	U4	Spoiler in a d.i. alarm level	R
2150	ALARM_50	U4	Spoiler in b d.i. alarm level	R
2151	ALARM_51	U4	Bubbler 1 level d.i. alarm level	R
2152	ALARM_52	U4	Bubbler 2 level d.i. alarm level	R
2153	ALARM_53	U4	Front shield closed d.i. alarm level	R
2154	ALARM_54	U4	N2 vacuum pump d.i. alarm level	R
2155	ALARM_55	U4	Lift b port/quartz guard shield d.i. alarm level	R
2156	ALARM_56	U4	Bubbler 3 level d.i. alarm level	R
2157	ALARM_57	U4	Vacuum pump trouble d.i. alarm level	R
2158	ALARM_58	U4	Compressed air vacuum valves d.i. alarm level	R
2159	ALARM_59	U4	Limit switch lift up b d.i. alarm level	R
2160	ALARM_60	U4	Limit switch lift down b d.i. alarm level	R
2161	ALARM_61	U4	Limit switch clamp b closed int d.i. alarm level	R
2162	ALARM_62	U4	Limit switch closed ext d.i. alarm level	R
2163	ALARM_63	U4	Clamp b open d.i. alarm level	R
2164	ALARM_64	U4	Rotation foot switch b d.i. alarm level	R
2401	DIGITAL_OUT_01	U4 or Bool	VCA D.O.	R
2402	DIGITAL_OUT_02	U4 or Bool	V83 D.O.	R
2403	DIGITAL_OUT_03	U4 or Bool	VCB D.O.	R
2404	DIGITAL_OUT_04	U4 or Bool	V41 D.O.	R
2405	DIGITAL_OUT_05	U4 or Bool	VT1A D.O.	R
2406	DIGITAL_OUT_06	U4 or Bool	V42 D.O.	R
2407	DIGITAL_OUT_07	U4 or Bool	VT2B D.O.	R
2408	DIGITAL_OUT_08	U4 or Bool	VDA D.O.	R
2409	DIGITAL_OUT_09	U4 or Bool	VB2 D.O.	R
2410	DIGITAL_OUT_10	U4 or Bool	VDB D.O.	R
2411	DIGITAL_OUT_11	U4 or Bool	V61 D.O.	R
2412	DIGITAL_OUT_12	U4 or Bool	V71 D.O.	R
2413	DIGITAL_OUT_13	U4 or Bool	V63 D.O.	R
2414	DIGITAL_OUT_14	U4 or Bool	V73 D.O.	R
2415	DIGITAL_OUT_15	U4 or Bool	V64 D.O.	R
2416	DIGITAL_OUT_16	U4 or Bool	V74 D.O.	R
2417	DIGITAL_OUT_17	U4 or Bool	V23 D.O.	R
2418	DIGITAL_OUT_18	U4 or Bool	V31 D.O.	R
2419	DIGITAL_OUT_19	U4 or Bool	V32 D.O.	R
2420	DIGITAL_OUT_20	U4 or Bool	V33 D.O.	R
2421	DIGITAL_OUT_21	U4 or Bool	VB1 D.O.	R
2422	DIGITAL_OUT_22	U4 or Bool	V51 D.O.	R
2423	DIGITAL_OUT_23	U4 or Bool	V53 D.O.	R
2424	DIGITAL_OUT_24	U4 or Bool	V54 D.O.	R
2425	DIGITAL_OUT_25	U4 or Bool	V4 D.O.	R
2426	DIGITAL_OUT_26	U4 or Bool	V7 D.O.	R

ECID	Name	Type	Description (PE2061S)	Read Write
2427	DIGITAL_OUT_27	U4 or Bool	V8 D.O.	R
2428	DIGITAL_OUT_28	U4 or Bool	V9 D.O.	R
2429	DIGITAL_OUT_29	U4 or Bool	V10 D.O.	R
2430	DIGITAL_OUT_30	U4 or Bool	V11 D.O.	R
2431	DIGITAL_OUT_31	U4 or Bool	V12 D.O.	R
2432	DIGITAL_OUT_32	U4 or Bool	V13 D.O.	R
2433	DIGITAL_OUT_33	U4 or Bool	V2A/C 6A D.O.	R
2434	DIGITAL_OUT_34	U4 or Bool	V2A/O D.O.	R
2435	DIGITAL_OUT_35	U4 or Bool	V4A D.O.	R
2436	DIGITAL_OUT_36	U4 or Bool	RED LIGHT D.O.	R
2437	DIGITAL_OUT_37	U4 or Bool	SPOILER A D.O.	R
2438	DIGITAL_OUT_38	U4 or Bool	WATCH DOG 1 D.O.	R
2439	DIGITAL_OUT_39	U4 or Bool	SHIELD DOWN D.O.	R
2440	DIGITAL_OUT_40	U4 or Bool	SHIELD UP D.O.	R
2441	DIGITAL_OUT_41	U4 or Bool	V2B/C 6B D.O.	R
2442	DIGITAL_OUT_42	U4 or Bool	V2B/O D.O.	R
2443	DIGITAL_OUT_43	U4 or Bool	YELLOW LIGHTS D.O.	R
2444	DIGITAL_OUT_44	U4 or Bool	GREEN LIGHTS D.O.	R
2445	DIGITAL_OUT_45	U4 or Bool	BUZZER D.O.	R
2446	DIGITAL_OUT_46	U4 or Bool	V9 D.O.	R
2447	DIGITAL_OUT_47	U4 or Bool	AVAILABLE D.O.	R
2448	DIGITAL_OUT_48	U4 or Bool	LIFT B DOWN D.O.	R
2449	DIGITAL_OUT_49	U4 or Bool	V4B D.O.	R
2450	DIGITAL_OUT_50	U4 or Bool	V90 D.O.	R
2451	DIGITAL_OUT_51	U4 or Bool	SPOILER B D.O.	R
2452	DIGITAL_OUT_52	U4 or Bool	INHIBIT 18 VDC D.O.	R
2453	DIGITAL_OUT_53	U4 or Bool	EV VENTURI D.O.	R
2454	DIGITAL_OUT_54	U4 or Bool	LIFT B UP D.O.	R
2455	DIGITAL_OUT_55	U4 or Bool	LIFT A UP D.O.	R
2456	DIGITAL_OUT_56	U4 or Bool	LIFT A DOWN D.O.	R
2457	DIGITAL_OUT_57	U4 or Bool	V75 DOPE A ON D.O.	R
2458	DIGITAL_OUT_58	U4 or Bool	V21 D.O.	R
2459	DIGITAL_OUT_59	U4 or Bool	V43 D.O.	R
2460	DIGITAL_OUT_60	U4 or Bool	V55 DOPE B ON D.O.	R
2461	DIGITAL_OUT_61	U4 or Bool	V81 D.O.	R
2462	DIGITAL_OUT_62	U4 or Bool	V22 D.O.	R
2463	DIGITAL_OUT_63	U4 or Bool	V82 D.O.	R
2464	DIGITAL_OUT_64	U4 or Bool	V3 D.O.	R
2465	DIGITAL_OUT_65	U4 or Bool	V1 D.O.	R
2467	DIGITAL_OUT_67	U4 or Bool	V16 D.O.	R
2469	DIGITAL_OUT_69	U4 or Bool	V17 D.O.	R
2471	DIGITAL_OUT_71	U4 or Bool	V65 D.O.	R
2473	DIGITAL_OUT_73	U4 or Bool	V85 D.O.	R

PE2061S - Status Variables Configuration

SVID	Name	Type	Description (PE2061S)	Read Write
10005	Control State	U4	Control State actual status identifier. Possible values: 0: OFF LINE STATE 1: EQUIPMENT OFF LINE STATE 2: ATTEMPT ON LINE STATE 3: HOST OFF LINE STATE 4: ON LINE STATE 5: REMOTE STATE 6: LOCAL STATE	R
10009	SpoolCountTotal[1]	U4	Spooled messages maximum number	R
1000000	POLL_STATUS	U4	Bell A Status. First 3 bits (right to left bit0, bit1 and bit2) must be read as a number as follows 0x0L: not configured 0x1L: BellA Free 0x2L: BellA Running 0x3L: BellA Aborted 0x4L: BellA in pause 0x5L: BellA Cooling 0x6L: BellA Waiting BellB 0x7L: BellA Stopped (aborted before process) Bit6 (0x40): BellA Warning flag Bit7 (0x80): BellA Alarm flag	R
1000001	POLL_PHASE	U4	Phase A. Values can be: 1: Pre-Purge N2 2: Pre-Purge H2 3: Process 4: Post-Purge H2 5: Post-Purge N2	R
1000002	POLL_GEN_STATUS	U4	Generator Status A ***flags***. From right to left: Bit0 (0x01): Generator working on Bell A Bit1 (0x02): Generator working on Bell B Bit2 (0x03): Generator Alarm (1 = Alarm) Bit3 (0x04): Generator in automatic mode Bit4 (0x05): Generator Working On Bell A Bit5 (0x06): Generator Working On Bell B	R
1000003	POLL_REACTORSTATUS	U4	Reactor Status A ***flags***. From right to left: Bit0 (0x00000001): *Reserved* Bit1 (0x00000002): Not Configured Bit2 (0x00000004): Bell A in Management Bit3 (0x00000008): Configured Bit5 (0x00000020): With S option enabled, power ramp on Bell A Bit6 (0x00000040): With S option enabled, power ramp on Bell B Bit7 (0x00000080): Generator ON Bit8 (0x00000100): Spoiler on bell A Bit9 (0x00000200): Spoiler on bell B Bit10 (0x00000400): Shield Opened Bit11 (0x00000800): Shield Moving Bit12 (0x00001000): Doing BellA O-RingTest	R

SVID	Name	Type	Description (PE2061S)	Read Write
			Bit16 (0x00010000): EV90 ON Bit21 (0x00200000): Using analog board TVM 751 instead of 744 Bit23 (0x00800000): Using 0Vdc to close MFCs valve Bit24 (0x01000000): Using fourth TVM 751 analog board	
1000004	POLL_BELLFLAGS	U4	Bell A ***flags***. From right to left: bit 0 (0x00000001): bell A alarm bit 1 (0x00000002): bell A warning bit 8 (0x00000100): bell A lift locked bit 9 (0x00000200): bell A lift closed bit 10 (0x00000400): bell A lift moved bit 11 (0x00000800): bell A lift trouble bit 12 (0x00001000): bell A recipe aborted bit 13 (0x00002000): bell A adjust recipe running bit 14 (0x00004000): bell A rotation on bit 16 (0x00010000): bell A purged bit 20 (0x00100000): bell A low pressure ON bit 21 (0x00200000): bell A low pressure test ON bit 28 (0x10000000): bell A set alarm pre H2 bit 29 (0x20000000): bell A set alarm process	R
1000005	POLL_RECIPESTEP	U4	Recipe step A	R
1000006	POLL_TIME_EXEC	U4	Time Exec A	R
1000007	POLL_MOTORSPEED	U4	Motorspeed A	R
1000100	POLL_STATUS	U4	Bell B Status. First 3 bits (right to left bit0, bit1 and bit2) must be read as a number as follows 0x0L: not configured 0x1L: BellB Free 0x2L: BellB Running 0x3L: BellB Aborted 0x4L: BellB in pause 0x5L: BellB Cooling 0x6L: BellB Waiting BellA 0x7L: BellB Stopped (aborted before process) Bit6 (0x40): BellB Warning flag Bit7 (0x80): BellB Alarm flag	R
1000101	POLL_PHASE	U4	Phase B. Values can be: 1 = Pre-Purge N2 2 = Pre-Purge H2 3 = Process 4 = Post-Purge H2 5 = Post-Purge N2	R
1000102	POLL_GEN_STATUS	U4	Generator Status B ***flags***. From right to left: Bit0 (0x01): Generator working on Bell A Bit1 (0x02): Generator working on Bell B Bit2 (0x03): Generator Alarm (1 = Alarm) Bit3 (0x04): Generator in automatic mode Bit4 (0x05): Generator Working On Bell A Bit5 (0x06): Generator Working On Bell B	R

SVID	Name	Type	Description (PE2061S)	Read Write
1000103	POLL_REACTORSTATUS	U4	Reactor Status B ***flags***. From right to left: Bit0 (0x00000001): *Reserved* Bit1 (0x00000002): Not Configured) Bit2 (0x00000004): Bell A in Management Bit3 (0x00000008): Configured Bit5 (0x00000020): With S option enabled, power ramp on Bell A Bit6 (0x00000040): With S option enabled, power ramp on Bell B Bit7 (0x00000080): Generator ON Bit8 (0x00000100): Spoiler on bell A Bit9 (0x00000200): Spoiler on bell B Bit10 (0x00000400): Shield Opened Bit11 (0x00000800): Shield Moving Bit12 (0x00001000): Doing BellA O-RingTest Bit16 (0x00010000): EV90 ON Bit21 (0x00200000): Using analog board TVM 751 instead of 744 Bit23 (0x00800000): Using 0Vdc to close MFCs valve Bit24 (0x01000000): Using fourth TVM 751 analog board	R
1000104	POLL_BELLFLAGS	U4	Bell B ***flags***. From right to left: bit 0 (0x00000001): bell B alarm bit 1 (0x00000002): bell B warning bit 8 (0x00000100): bell B lift locked bit 9 (0x00000200): bell B lift closed bit 10 (0x00000400): bell B lift moved bit 11 (0x00000800): bell B lift trouble bit 12 (0x00001000): bell B recipe aborted bit 13 (0x00002000): bell B adjust recipe running bit 14 (0x00004000): bell B rotation on bit 16 (0x00010000): bell B purged bit 20 (0x00100000): bell B low pressure ON bit 21 (0x00200000): bell B low pressure test ON bit 28 (0x10000000): bell B set alarm pre H2 bit 29 (0x20000000): bell B set alarm process	R
1000105	POLL_RECIPESTEP	U4	Recipe Step B	R
1000106	POLL_TIME_EXEC	U4	Time Exec B	R
1000107	POLL_MOTORSPEED	U4	Motor Speed B	R
1002000	V_GASSOURCE_1_STAT	U4	Source 1 Status: 0 = OFF 1 = ON 2 = VENT 3 = BELL	R
1002001	V_GASSOURCE_2_STAT	U4	Source 2 Status: 0 = OFF 1 = ON 2 = VENT 3 = BELL	R
1002002	V_GASSOURCE_3_STAT	U4	Source 3 Status: 0 = OFF 1 = ON 2 = VENT 3 = BELL	R

SVID	Name	Type	Description (PE2061S)	Read Write
1002003	V_GASHYDROGEN_ASTAT	U4	Hydrogen A Status: 0 = OFF 1 = ON 2 = VENT 3 = BELL	R
1002004	V_GASHYDROGEN_BSTAT	U4	Hydrogen B Status: 0 = OFF 1 = ON 2 = VENT 3 = BELL	R
1002005	V_GASDOPE_1_STAT	U4	Dope 1 Status: 0 = OFF 1 = ON 2 = VENT 3 = BELL	R
1002006	V_GASDOPE_2_STAT	U4	Dope 2 Status: 0 = OFF 1 = ON 2 = VENT 3 = BELL	R
1002007	V_GASDOPE_3_STAT	U4	Dope 3 Status: 0 = OFF 1 = ON 2 = VENT 3 = BELL	R
1002008	V_GASDILUTE_1_STAT	U4	Dilute 1 Status: 0 = OFF 1 = ON 2 = VENT 3 = BELL	R
1002009	V_GASDILUTE_2_STAT	U4	Dilute 2 Status: 0 = OFF 1 = ON 2 = VENT 3 = BELL	R
1002010	V_GASDILUTE_3_STAT	U4	Dilute 3 Status: 0 = OFF 1 = ON 2 = VENT 3 = BELL	R
1002011	V_GASINJECT_1_STAT	U4	Inject 1 Status: 0 = OFF 1 = ON 2 = VENT 3 = BELL	R
1002012	V_GASINJECT_2_STAT	U4	Inject 2 Status: 0 = OFF 1 = ON 2 = VENT 3 = BELL	R
1002013	V_GASINJECT_3_STAT	U4	Inject 3 Status: 0 = OFF 1 = ON 2 = VENT 3 = BELL	R
1002014	V_GASHCL_STAT	U4	HCl Status: 0 = OFF	R

SVID	Name	Type	Description (PE2061S)	Read Write
			1 = ON 2 = VENT 3 = BELL	
1002015	V_GASN2_ASTAT	U4	N2 A Status: 0 = OFF 1 = ON 2 = VENT 3 = BELL	R
1002016	V_GASN2_BSTAT	U4	N2 B Status: 0 = OFF 1 = ON 2 = VENT 3 = BELL	R
1002017	V_GASH2PURGE_ASTAT	U4	H2 Purge A Status: 0 = OFF 1 = ON 2 = VENT 3 = BELL	R
1002018	V_GASH2PURGE_BSTAT	U4	H2 Purge B Status: 0 = OFF 1 = ON 2 = VENT 3 = BELL	R
1002019	V_GASHCLFAST_STAT	U4	HCl Fast Status: 0 = OFF 1 = ON 2 = VENT 3 = BELL	R
1002020	V_GASFASTPURGE_BSTAT	U4	Fast Purge B Status: 0 = OFF 1 = ON 2 = VENT 3 = BELL	R
1002100	V_GASSOURCE_1_SET	U4	Source 1 Setpoint	R
1002101	V_GASSOURCE_2_SET	U4	Source 2 Setpoint	R
1002102	V_GASSOURCE_3_SET	U4	Source 3 Setpoint	R
1002103	V_GASHYDROGEN_ASET	U4	Hydrogen A Setpoint	R
1002104	V_GASHYDROGEN_BSET	U4	Hydrogen B Setpoint	R
1002105	V_GASDOPE_1_SET	U4	Dope 1 Setpoint	R
1002106	V_GASDOPE_2_SET	U4	Dope 2 Setpoint	R
1002107	V_GASDOPE_3_SET	U4	Dope 3 Setpoint	R
1002108	V_GASDILUTE_1_SET	U4	Dilute 1 Setpoint	R
1002109	V_GASDILUTE_2_SET	U4	Dilute 2 Setpoint	R
1002110	V_GASDILUTE_3_SET	U4	Dilute 3 Setpoint	R
1002111	V_GASINJECT_1_SET	U4	Inject 1 Setpoint	R
1002112	V_GASINJECT_2_SET	U4	Inject 2 Setpoint	R
1002113	V_GASINJECT_3_SET	U4	Inject 3 Setpoint	R
1002114	V_GASHCL_SET	U4	HCl Setpoint	R
1002115	V_GASN2_ASET	U4	N2 A Setpoint	R
1002116	V_GASN2_BSET	U4	N2 B Setpoint	R
1002117	V_GASH2PURGE_ASET	U4	H2 Purge A Setpoint	R
1002118	V_GASH2PURGE_BSET	U4	H2 Purge B Setpoint	R
1002119	V_GASHCLFAST_SET	U4	HCl Fast Setpoint	R
1002120	V_GASFASTPURGE_BSET	U4	Fast Purge B Setpoint	R

SVID	Name	Type	Description (PE2061S)	Read Write
1002200	V_GASSOURCE_1_FLOW	U4	Source 1 Flow	R
1002201	V_GASSOURCE_2_FLOW	U4	Source 2 Flow	R
1002202	V_GASSOURCE_3_FLOW	U4	Source 3 Flow	R
1002203	V_GASHYDROGEN_AFLOW	U4	Hydrogen A Flow	R
1002204	V_GASHYDROGEN_BFLOW	U4	Hydrogen B Flow	R
1002205	V_GASDOPE_1_FLOW	U4	Dope 1 Flow	R
1002206	V_GASDOPE_2_FLOW	U4	Dope 2 Flow	R
1002207	V_GASDOPE_3_FLOW	U4	Dope 3 Flow	R
1002208	V_GASDILUTE_1_FLOW	U4	Dilute 1 Flow	R
1002209	V_GASDILUTE_2_FLOW	U4	Dilute 2 Flow	R
1002210	V_GASDILUTE_3_FLOW	U4	Dilute 3 Flow	R
1002211	V_GASINJECT_1_FLOW	U4	Inject 1 Flow	R
1002212	V_GASINJECT_2_FLOW	U4	Inject 2 Flow	R
1002213	V_GASINJECT_3_FLOW	U4	Inject 3 Flow	R
1002214	V_GASHCL_FLOW	U4	HCl Flow	R
1002215	V_GASN2_AFLOW	U4	N2 A Flow	R
1002216	V_GASN2_BFLOW	U4	N2 B Flow	R
1002217	V_GASH2PURGE_AFLOW	U4	H2 Purge A Flow	R
1002218	V_GASH2PURGE_BFLOW	U4	H2 Purge B Flow	R
1002219	V_GASHCLFAST_AFLOW	U4	HCl Fast A Flow	R
1002220	V_GASFASTPURGE_BFLOW	U4	Fast Purge B Flow	R
1002300	V_GASSOURCE_1_CARRIER	U4	Source 1 Carrier	R
1002301	V_GASSOURCE_2_CARRIER	U4	Source 2 Carrier	R
1002302	V_GASSOURCE_3_CARRIER	U4	Source 3 Carrier	R
1002304	V_GASSOURCE_1_RATIO	U4	Source 1 Ratio	R
1002305	V_GASSOURCE_2_RATIO	U4	Source 2 Ratio	R
1002306	V_GASSOURCE_3_RATIO	U4	Source 3 Ratio	R
1002400	V_GASSOURCE_1_PRESS	U4	Source 1 Pressure	R
1002401	V_GASSOURCE_2_PRESS	U4	Source 2 Pressure	R
1002402	V_GASSOURCE_3_PRESS	U4	Source 3 Pressure	R
1002403	V_GASHYDROGEN_APRESS	U4	Hydrogen A Pressure	R
1002404	V_GASHYDROGEN_BPRESS	U4	Hydrogen B Pressure	R
1002405	V_GASDOPE_1_PRESS	U4	Dope 1 Pressure	R
1002406	V_GASDOPE_2_PRESS	U4	Dope 2 Pressure	R
1002407	V_GASDOPE_3_PRESS	U4	Dope 3 Pressure	R
1002408	V_GASDILUTE_1_PRESS	U4	Dilute 1 Pressure	R
1002409	V_GASDILUTE_2_PRESS	U4	Dilute 2 Pressure	R
1002410	V_GASDILUTE_3_PRESS	U4	Dilute 3 Pressure	R
1002411	V_GASINJECT_1_PRESS	U4	Inject 1 Pressure	R
1002412	V_GASINJECT_2_PRESS	U4	Inject 2 Pressure	R
1002413	V_GASINJECT_3_PRESS	U4	Inject 3 Pressure	R
1002414	V_GASHCL_PRESS	U4	HCl Pressure	R
1002415	V_GASN2_APRESS	U4	N2 A Pressure	R
1002416	V_GASN2_BPRESS	U4	N2 B Pressure	R
1002417	V_GASH2PURGE_APRESS	U4	H2 Purge A Pressure	R
1002418	V_GASH2PURGE_BPRESS	U4	H2 Purge B Pressure	R
1002419	V_GASHCLFAST_APRESS	U4	HCl Fast A Pressure	R
1002420	V_GASFASTPURGE_BPRESS	U4	Fast Purge B Pressure	R
1003000	V_DIGITAL_INPUTGROUP_00_15	U4	Digital Input Group 00-15.	R

SVID	Name	Type	Description (PE2061S)	Read Write
			Bit 0 = ID0 Bit 1 = ID1 … Bit15 = ID15	
1003001	V_DIGITAL_INPUTGROUP_16_31	U4	Digital Input Group 16-31 Bit 0 = ID16 Bit 1 = ID17 … Bit15 = ID31	R
1003002	V_DIGITAL_INPUTGROUP_32_47	U4	Digital Input Group 32-47 Bit 0 = ID32 Bit 1 = ID33 … Bit15 = ID47	R
1003003	V_DIGITAL_INPUTGROUP_48_63	U4	Digital Input Group 48-63 Bit 0 = ID48 Bit 1 = ID49 … Bit15 = ID63	R
1003100	V_DIGITAL_OUTPUTGROUP_00_15	U4	Digital Output Group 00-15. Bit 0 = OD0 Bit 1 = OD1 … Bit15 = OD15	R
1003101	V_DIGITAL_OUTPUTGROUP_16_31	U4	Digital Output Group 16-31 Bit 0 = OD16 Bit 1 = OD17 … Bit15 = OD31	R
1003102	V_DIGITAL_OUTPUTGROUP_32_47	U4	Digital Output Group 32-47 Bit 0 = OD32 Bit 1 = OD33 … Bit15 = OD47	R
1003103	V_DIGITAL_OUTPUTGROUP_48_63	U4	Digital Output Group 48-63 Bit 0 = OD48 Bit 1 = OD49 … Bit15 = OD63	R
1003200	V_ANALOG_IN_SX1CA	U4	Analog In Sx1ca (0-10 volt)	R
1003201	V_ANALOG_IN_SX1	U4	Analog In Sx1 (0-10 volt)	R
1003202	V_ANALOG_IN_SX1RATIO	U4	Analog In Sx1ratio (0-10 volt)	R
1003203	V_ANALOG_IN_N2	U4	Analog In N2 (0-10 volt)	R
1003204	V_ANALOG_IN_HCl	U4	Analog In HCl (0-10 volt)	R
1003205	V_ANALOG_IN_DILUTE1	U4	Analog In Dilute1 (0-10 volt)	R
1003206	V_ANALOG_IN_H2PURGE	U4	Analog In H2purge (0-10 volt)	R
1003207	V_ANALOG_IN_H2_MAIN	U4	Analog In H2 Main (0-10 volt)	R
1003208	V_ANALOG_IN_CARRIER	U4	Analog In Carrier (0-10 volt)	R
1003209	V_ANALOG_IN_SX2	U4	Analog In Sx2 (0-10 volt)	R
1003210	V_ANALOG_IN_SX2RA	U4	Analog In Sx2ra (0-10 volt)	R
1003211	V_ANALOG_IN_DOPE2	U4	Analog In Dope2 (0-10 volt)	R
1003212	V_ANALOG_IN_INJECT1	U4	Analog In Inject1 (0-10 volt)	R
1003213	V_ANALOG_IN_DOPE1	U4	Analog In Dope1 (0-10 volt)	R
1003214	V_ANALOG_IN_INJECT2	U4	Analog In Inject2 (0-10 volt)	R
1003215	V_ANALOG_IN_DILUTE2	U4	Analog In Dilute2 (0-10 volt)	R

SVID	Name	Type	Description (PE2061S)	Read Write
1003216	V_ANALOG_IN_LIFT_POT_A	U4	Analog In Lift Pot A (0-10 volt)	R
1003217	V_ANALOG_IN_PYROA	U4	Analog In Pyroa (0-10 volt)	R
1003218	V_ANALOG_IN_LIFT_POT_B	U4	Analog In Lift Pot B (0-10 volt)	R
1003219	V_ANALOG_IN_PYROB	U4	Analog In Pyrob (0-10 volt)	R
1003220	V_ANALOG_IN_DILUTE3	U4	Analog In Dilute3 (0-10 volt)	R
1003221	V_ANALOG_IN_INJECT3	U4	Analog In Inject3 (0-10 volt)	R
1003222	V_ANALOG_IN_HClFAST	U4	Analog In Hclfast (0-10 volt)	R
1003223	V_ANALOG_IN_DOPE3	U4	Analog In Dope3 (0-10 volt)	R
1003224	V_ANALOG_IN_HCl_PRESS	U4	Analog In Hcl Press (0-10 volt)	R
1003225	V_ANALOG_IN_DOPE1_PRESS	U4	Analog In Dope1 Press (0-10 volt)	R
1003226	V_ANALOG_IN_DOPE2_PRESS	U4	Analog In Dope2 Press (0-10 volt)	R
1003227	V_ANALOG_IN_DOPE3_PRESS	U4	Analog In Dope3 Press (0-10 volt)	R
1003228	V_ANALOG_IN_SILICON_DRUM	U4	Analog In Silicon Drum (0-10 volt)	R
1003229	V_ANALOG_IN_VACUUMA	U4	Analog In Vacuuma (0-10 volt)	R
1003230	V_ANALOG_IN_VACUUMB	U4	Analog In Vacuumb (0-10 volt)	R
1003231	V_ANALOG_IN_NOTUSED	U4	Analog In Notused (0-10 volt)	R
1003300	V_ANALOG_OUT_SX1	U4	Analog Out Sx1 (0-10 volt)	R
1003301	V_ANALOG_OUT_FC1	U4	Analog Out Fc1 (0-10 volt)	R
1003302	V_ANALOG_OUT_FC2	U4	Analog Out Fc2 (0-10 volt)	R
1003303	V_ANALOG_OUT_FC8	U4	Analog Out Fc8 (0-10 volt)	R
1003304	V_ANALOG_OUT_FC3	U4	Analog Out Fc3 (0-10 volt)	R
1003305	V_ANALOG_OUT_FC51	U4	Analog Out Fc51 (0-10 volt)	R
1003306	V_ANALOG_OUT_SX2	U4	Analog Out Sx2 (0-10 volt)	R
1003307	V_ANALOG_OUT_FC61	U4	Analog Out Fc61 (0-10 volt)	R
1003308	V_ANALOG_OUT_FC62	U4	Analog Out Fc62 (0-10 volt)	R
1003309	V_ANALOG_OUT_FC52	U4	Analog Out Fc52 (0-10 volt)	R
1003310	V_ANALOG_OUT_FC63	U4	Analog Out Fc63 (0-10 volt)	R
1003311	V_ANALOG_OUT_FC53	U4	Analog Out Fc53 (0-10 volt)	R
1003312	V_ANALOG_OUT_NOT_USED_1	U4	Analog Out Not Used 1 (0-10 volt)	R
1003313	V_ANALOG_OUT_FC73	U4	Analog Out Fc73 (0-10 volt)	R
1003314	V_ANALOG_OUT_SX3	U4	Analog Out Sx3 (0-10 volt)	R
1003315	V_ANALOG_OUT_FC71	U4	Analog Out Fc71 (0-10 volt)	R
1003316	V_ANALOG_OUT_NOT_USED_2	U4	Analog Out Not Used 2 (0-10 volt)	R
1003317	V_ANALOG_OUT_FC72	U4	Analog Out Fc72 (0-10 volt)	R
1003318	V_ANALOG_OUT_NOT_USED_3	U4	Analog Out Not Used 3 (0-10 volt)	R
1003319	V_ANALOG_OUT_NOT_USED_4	U4	Analog Out Not Used 4 (0-10 volt)	R
1003320	V_ANALOG_OUT_NOT_USED_5	U4	Analog Out Not Used 5 (0-10 volt)	R
1003321	V_ANALOG_OUT_NOT_USED_6	U4	Analog Out Not Used 6 (0-10 volt)	R
1003322	V_ANALOG_OUT_NOT_USED_7	U4	Analog Out Not Used 7 (0-10 volt)	R
1003323	V_ANALOG_OUT_NOT_USED_8	U4	Analog Out Not Used 8 (0-10 volt)	R
1003324	V_ANALOG_OUT_NOT_USED_9	U4	Analog Out Not Used 9 (0-10 volt)	R
1003325	V_ANALOG_OUT_NOT_USED_10	U4	Analog Out Not Used 10 (0-10 volt)	R
1003326	V_ANALOG_OUT_NOT_USED_11	U4	Analog Out Not Used 11 (0-10 volt)	R
1003327	V_ANALOG_OUT_NOT_USED_12	U4	Analog Out Not Used 12 (0-10 volt)	R
1003328	V_ANALOG_OUT_NOT_USED_13	U4	Analog Out Not Used 13 (0-10 volt)	R
1003329	V_ANALOG_OUT_NOT_USED_14	U4	Analog Out Not Used 14 (0-10 volt)	R
1003330	V_ANALOG_OUT_NOT_USED_15	U4	Analog Out Not Used 15 (0-10 volt)	R
1003331	V_ANALOG_OUT_NOT_USED_16	U4	Analog Out Not Used 16 (0-10 volt)	R
1003332	V_ANALOG_OUT_NOT_USED_17	U4	Analog Out Not Used 17 (0-10 volt)	R

SVID	Name	Type	Description (PE2061S)	Read Write
1003333	V_ANALOG_OUT_NOT_USED_18	U4	Analog Out Not Used 18 (0-10 volt)	R
1003334	V_ANALOG_OUT_NOT_USED_19	U4	Analog Out Not Used 19 (0-10 volt)	R
1003335	V_ANALOG_OUT_NOT_USED_20	U4	Analog Out Not Used 20 (0-10 volt)	R
1003336	V_ANALOG_OUT_PRESS_SET_POINT	U4	Analog Out Press Set Point (0-10 volt)	R
1003337	V_ANALOG_OUT_PROCESS_VACUUM_VAR	U4	Analog Out Process Vacuum Var (0-10 volt)	R
1003338	V_ANALOG_OUT_NOT_USED_21	U4	Analog Out Not Used 21 (0-10 volt)	R
1003339	V_ANALOG_OUT_NOT_USED_22	U4	Analog Out Not Used 22 (0-10 volt)	R
1003340	V_ANALOG_OUT_NOT_USED_23	U4	Analog Out Not Used 23 (0-10 volt)	R
1003341	V_ANALOG_OUT_NOT_USED_24	U4	Analog Out Not Used 24 (0-10 volt)	R
1003342	V_ANALOG_OUT_NOT_USED_25	U4	Analog Out Not Used 25 (0-10 volt)	R
1003343	V_ANALOG_OUT_NOT_USED_26	U4	Analog Out Not Used 26 (0-10 volt)	R
1003344	V_ANALOG_OUT_NOT_USED_27	U4	Analog Out Not Used 27 (0-10 volt)	R
1003345	V_ANALOG_OUT_NOT_USED_28	U4	Analog Out Not Used 28 (0-10 volt)	R
1003346	V_ANALOG_OUT_NOT_USED_29	U4	Analog Out Not Used 29 (0-10 volt)	R
1003347	V_ANALOG_OUT_NOT_USED_30	U4	Analog Out Not Used 30 (0-10 volt)	R
1004000	V_POSMOT_A	U4	Motor Position A	R
1004001	V_POSMOT_B	U4	Motor Position B	R
1004002	V_POWER_SET_A	U4	Generator Setpoint A	R
1004003	V_POWER_EROGATA_A	U4	Generator Feedback A	R
1004004	V_TEMP_SET_A	U4	Temperature Setpoint A	R
1004005	V_TEMP_REAL_A	U4	Temperature Feedback A	R
1004006	V_PRESSURE_SET_A	U4	Pressure Bell Setpoint A	R
1004007	V_PRESSURE_SET_B	U4	Pressure Bell Setpoint B	R
1004008	V_JARA_PRESSURE	U4	Pressure Bell A	R
1004009	V_JARB_PRESSURE	U4	Pressure Bell B	R
1004010	V_POWER_PREH2	U4	Prepurge Power	R
1004011	V_POWER_SET_B	U4	Generator Setpoint B	R
1004012	V_POWER_EROGATA_B	U4	Generator Feedback B	R
1004013	V_TEST_ENDTO	U4	Reduced Pressure Test Time-To-Go	R
1004014	V_TEST_STATUS	U4	Reduced Pressure Test Status	R
1004015	V_LIFT_POT_A	U4	Lift Motor Position A	R
1004016	V_LIFT_POT_B	U4	Lift Motor Position B	R
1004017	V_EV90COMMAND	U4	Ev90 Setting	R
1004018	V_DOPESWITCHCOMMAND	U4	Dope Switch Setting	R
1004019	V_TEMP_SET_B	U4	Temperature Setpoint B	R
1004020	V_TEMP_REAL_B	U4	Temperature Feedback B	R
2000000	INT_VR_ACTIVE_RECIPE_A	A	Recipe Name A	R
2000001	INT_VR_ACTIVE_RECIPE_B	A	Recipe Name B	R

PE2061S - Remote Commands Configuration

Command	Parameters (CPNAME)	Parameters Format	Paremeters Values Allowed (CPVALUE)	Description (PE2061S)
RUN	BELLJAR LOTID	U4 ASCII	BELLJAR • BELLJAR = 1 → Bell A • BELLJAR = 2 → Bell B LOTID • Any string. This parameter can be omitted	Starts selected recipe.
HOLD	BELLJAR	U4	BELLJAR • BELLJAR = 1 → Bell A • BELLJAR = 2 → Bell B	Pauses the running recipe
GO	BELLJAR	U4	BELLJAR • BELLJAR = 1 → Bell A • BELLJAR = 2 → Bell B	Resume the paused recipe
STOP	BELLJAR	U4	BELLJAR • BELLJAR = 1 → Bell A • BELLJAR = 2 → Bell B	Stops the recipe in PRE-N2 and PRE-H2
ABORT	BELLJAR	U4	BELLJAR • BELLJAR = 1 → Bell A • BELLJAR = 2 → Bell B	Aborts the recipe running
PPSELECT	BELLJAR RECIPE	U4 ASCII	BELLJAR • BELLJAR = 1 → Bell A • BELLJAR = 2 → Bell B RECIPE • ‘*pp_name*.A’ • ’*pp_name*.B’	Selects a recipe (Process Program)

PE3061D

PE3061D - Alarms Configuration

All the following alarms are thoroughly described in the troubleshooting manual. Please refer to the troubleshooting manual for further details.

Alarm ID	Alarm Description (PE3061D)	Gravity	Event ID on Alarm ON	Event ID on Alarm OFF
1	AL1 - Power Temp	Warning	10	303
2	AL2 - Serial Pc Not connetded	H-Alarm	9	303
4	AL4 - Hcl Pressure Trouble	Warning	10	303
5	AL5 - Dope1 Pressure Trouble	Warning	10	303
6	AL6 - Dope2 Pressure Trouble	Warning	10	303
7	AL7 - Dope3 Pressure Trouble	Warning	10	303
8	AL8 - Warning Bubbler Refill	Warning	10	303
9	AL9 - Overpressure chamber	N-Alarm	9	303
10	AL10 - Overpressure chamber	Warning	10	303
11	AL11 - Underpressure chamber	N-Alarm	9	303
12	AL12 - Underpressure chamber	Warning	10	303
13	AL13 - Emergency Pressed	N-Alarm	9	303
14	AL14 - RampUp timeout	H-Alarm	9	303
15	AL15 - Recipe without TEMP or start too low	H-Alarm	9	303
16	AL16 - Start temperature too low	H-Alarm	9	303
17	AL17 - N2 Vat Flow trouble	H-Alarm	9	303
20	AL20 - Error D/0 Board N 1	H-Alarm	9	303
21	AL21 - Error D/0 Board N 6	H-Alarm	9	303
22	AL22 - Error D/0 Board N 15	H-Alarm	9	303
23	AL23 - Error D/I Board N 3	H-Alarm	9	303
24	AL24 - Error D/I Board N 4	H-Alarm	9	303
25	AL25 - Error A/0 Board N 8	H-Alarm	9	303
26	AL26 - Error A/0 Board N 10	H-Alarm	9	303
27	AL27 - Error A/O Board N 12	H-Alarm	9	303
28	AL28 - Error A/I Board N 7	H-Alarm	9	303
29	AL29 - Error A/I Board N 9	H-Alarm	9	303
30	AL30 - Error A/I Board N 11	H-Alarm	9	303
31	AL31 - Error A/I Board N 13	H-Alarm	9	303
32	AL32 - Error A/I Board N 14	H-Alarm	9	303
51	AL51 - Max power limit	Warning	10	303
52	AL52 - Gate Locked - Robot2 chamber open	H-Alarm	9	303
53	AL53 - Warning UPS test	Warning	10	303
54	AL54 - Alarm UPS test	H-Alarm	9	303
55	AL55 - Serial Generator Trouble	H-Alarm	9	303
56	AL56 - Generator Trouble	H-Alarm	9	303
57	AL57 - Zero Power	H-Alarm	9	303
58	AL58 - Pyrometer Trouble	H-Alarm	9	303
59	AL59 - Over Temperature	H-Alarm	9	303
60	AL60 - Temp Trouble	Warning, H-Alarm	10 or 9	303
61	AL61 - Auto with wafers on susceptor	H-Alarm	9	303
62	AL62 - Vat External or Internal Open	N-Alarm	9	303
63	AL63 - FC91 N2 Chambre Trouble	Warning or H-Alarm	10 or 9	303
64	AL64 - FC93 Trouble	Warning or H-Alarm	10 or 9	303
65	AL65 - Gate open	Warning or H-Alarm	10 or 9	303
66	AL66 - FC10 Trouble	Warning or H-Alarm	10 or 9	303
67	AL67 - SX1 Trouble	Warning or H-Alarm	10 or 9	303
68	AL68 - SX2 Trouble	Warning or H-Alarm	10 or 9	303

Alarm ID	Alarm Description (PE3061D)	Gravity	Event ID on Alarm ON	Event ID on Alarm OFF
69	AL69 - SX3 Trouble	Warning or H-Alarm	10 or 9	303
70	AL70 - FC53 Trouble	Warning or H-Alarm	10 or 9	303
71	AL71 - FC63 Trouble	Warning or H-Alarm	10 or 9	303
72	AL72 - FC73 Trouble	Warning or H-Alarm	10 or 9	303
73	AL73 - FC51 Trouble	Warning or H-Alarm	10 or 9	303
74	AL74 - FC61 Trouble	Warning or H-Alarm	10 or 9	303
75	AL75 - FC71 Trouble	Warning or H-Alarm	10 or 9	303
76	AL76 - FC52 Trouble	Warning or H-Alarm	10 or 9	303
77	AL77 - FC62 Trouble	Warning or H-Alarm	10 or 9	303
78	AL78 - FC72 Trouble	Warning or H-Alarm	10 or 9	303
79	AL79 - FC80 Trouble	Warning or H-Alarm	10 or 9	303
80	AL80 - FM95 Trouble	Warning or H-Alarm	10 or 9	303
81	AL81 - FC12 Trouble	Warning or H-Alarm	10 or 9	303
82	AL82 - Generator Run Command Error	H-Alarm	9	303
83	AL83 - N2 Injection FMs Sum Trouble	Warning	10	303
84	AL84 - FM95 out of range (5-50slm) in H2	Warning	10	303
85	AL85 - Warning Bubbler 1 Empty	Warning	10	303
86	AL86 - Warning Bubbler 2 Empty	Warning	10	303
88	AL88 - Rotation Speed Trouble	H-Alarm	9	303
89	AL89 - Rotation Trouble	H-Alarm	9	303
90	AL90 - Zero error	H-Alarm	9	303
91	AL91 - Load wafers exceeds cassette capacity	H-Alarm	9	303
92	AL92 - Fast Rotation zero check Trouble	H-Alarm	9	303
93	AL93 - Timeout or rotation command error	H-Alarm	9	303
94	AL94 - Offset after zero error	H-Alarm	9	303
95	AL95 - Offset execution command error	H-Alarm	9	303
96	AL96 - Exec NULL receipe	H-Alarm	9	303
97	AL97 - Power Limit	Warning	10	303
98	AL98 - LoadLock Purge Vacuum Timeout	H-Alarm	9	303
99	AL99 - LoadLock Purge Refill Timeout	H-Alarm	9	303
100	AL100 - Susceptor Sliding Trouble	H-Alarm	9	303
101	AL101 - Water Cooling Pumps Faults	N-Alarm	9	303
102	AL102 - Laser Panel Open	H-Alarm	9	303
103	AL103 - Dual Seal Vacuum Timeout	N-Alarm	9	303
104	AL104 - Dual Seal Leak (Checking Flanges...)	N-Alarm	9	303
105	AL105 - Dual Seal Leak Injection Flange	N-Alarm	9	303
106	AL106 - Dual Seal Leak Exhaust Flange	N-Alarm	9	303
107	AL107 - WHC Purge Vacuum Timeout	H-Alarm	9	303
108	AL108 - WHC Purge Refill Timeout	H-Alarm	9	303
109	AL109 - WHC Pressure Trouble	H-Alarm	9	303
110	AL110 - Water Refilling Trouble	Warning	10	303
111	AL111 - Pyrometer not homed	Warning	10	303
112	AL112 - Rotation Not Connected	H-Alarm	9	303
113	AL113 - Robot Coordinate Changed;Check Station Coordinate	Warning	10	303
114	AL114 - Too much refill	H-Alarm	9	303
115	AL115 – Pyrometer not zero Homed	Warning	9	303
116	AL116 - H2 Leak Warning 1	Warning	10	303
117	AL117 - H2 Leak Warning 2	Warning	10	303
118	AL118 - H2 Leak Warning 3	Warning	10	303
119	AL119 - Retry to get wafer	Warning	10	303
206	AL206 - FM14 D.Net Fault (H2 left)	Warning	10	303
207	AL207 - FM15 D.Net Fault (H2 center)	Warning	10	303
208	AL208 - FM16 D.Net Fault (H2 right)	Warning	10	303
209	AL209 - FC91 D.Net Fault (Robot Chamber)	Warning	10	303

Alarm ID	Alarm Description (PE3061D)	Gravity	Event ID on Alarm ON	Event ID on Alarm OFF
210	AL210 - FC92 D.Net Fault (Loadlock Purge)	Warning	10	303
211	AL211 - FC93 D.Net Fault (Venturi)	Warning	10	303
212	AL212 - FC10 D.Net Fault (H2 Main Hight Flow)	Warning	10	303
213	AL213 - FC12 D.Net Fault (H2 shaft)	Warning	10	303
214	AL214 - FC11 D.Net Fault (H2 Main Low Flow)	Warning	10	303
215	AL215 - FC21 D.Net Fault (SX1)	Warning	10	303
216	AL216 - FC22 D.Net Fault (SX2)	Warning	10	303
217	AL217 - FC51 D.Net Fault (Dilute1)	Warning	10	303
218	AL218 - FC52 D.Net Fault (Inject1)	Warning	10	303
219	AL219 - FC53 D.Net Fault (Dope1)	Warning	10	303
220	AL220 - FC61 D.Net Fault (Dilute2)	Warning	10	303
221	AL221 - FC62 D.Net Fault (Inject2)	Warning	10	303
222	AL222 - FC63 D.Net Fault (Dilute1)	Warning	10	303
223	AL223 - FC71 D.Net Fault (Inject1)	Warning	10	303
224	AL224 - FC72 D.Net Fault (Dope1)	Warning	10	303
225	AL225 - FC73 D.Net Fault (Dilute2)	Warning	10	303
226	AL226 - FC80 D.Net Fault (Inject2)	Warning	10	303
227	AL227 - FC83 D.Net Fault (Dilute2)	Warning	10	303
228	AL228 - FM95 D.Net Fault (Inject2)	Warning	10	303
240	AL240 - Generator D.Net Fault	Warning	10	303
501	ID1 - H2 Leak Alarm 1	N-Alarm	9	303
502	ID2 - Reset Pilz	Warning	10	303
503	ID3 - H2 Leak Alarm 2	N-Alarm	9	303
505	ID5 - H2 Leak Alarm 3	N-Alarm	9	303
506	ID6 - H2 Leak Sensor Fault	N-Alarm	9	303
510	ID10 - Scrubber trouble	N-Alarm	9	303
511	ID11 - External Vacuum Sensor	Warning	10	303
512	ID12 - Cooling Pump #1 Fault	H-Alarm	9	303
513	ID13 - Cooling Pump #2 Fault	H-Alarm	9	303
514	ID14 - Chamber Thermal Sw.	N-Alarm	9	303
515	ID15 - Laminar Flow	Warning	10	303
517	ID17 - Customer DI	Customer’s choice	Customer’s choice	303
518	ID18 - Customer DI	Customer’s choice	Customer’s choice	303
519	ID19 - Customer DI	Customer’s choice	Customer’s choice	303
520	ID20 - Customer DI	Customer’s choice	Customer’s choice	303
521	ID21 - Anemometer Lower Limit Sw.	H-Alarm	9	303
522	ID22 - Pyrometer Upper Limit Sw.	H-Alarm	9	303
523	ID23 - Cooling Fan Inverter Fault	H-Alarm	9	303
538	ID38 - Tank Level Alarm	H-Alarm	9	303
539	ID39 - Left Front Door Open	Warning	10	303
540	ID40 - Right Front Door Open	Warning	10	303
541	ID41 - Laminar Flow Press Sw.	Warning	10	303
543	ID43 - Water Leak Detection	H-Alarm	9	303
547	ID47 - Robot 2 Cover Open	Warning	10	303
548	ID48 - Injection Cover	Warning	10	303
549	ID49 - Oxigen Sensor (Customer Site)	Customer’s choice	Customer’s choice	303
564	ID64 - Chamber Cover Rear Sw.	Warning	10	303
565	ID65 - Water Thermostat	H-Alarm	9	303
566	ID66 - Main Water Flow Sw.	H-Alarm	9	303
567	ID67 - Upper Cover Explosion Sw.	N-Alarm	9	303

Alarm ID	Alarm Description (PE3061D)	Gravity	Event ID on Alarm ON	Event ID on Alarm OFF
568	ID68 - Upper Cooling Flow Sw.	H-Alarm	9	303
569	ID69 - Lower Cooling flow Sw.	H-Alarm	9	303
570	ID70 - Capacitor Flow Sw.	H-Alarm	9	303
572	ID72 - Disable Chamber Lift Sw.	N-Alarm	9	303
573	ID73 - Rotation Purge Press. Sw.	N-Alarm	9	303
574	ID74 - Chamber Right Door Open	H-Alarm	9	303
575	ID75 - Chamber Left Door Open	H-Alarm	9	303
576	ID76 - Chamber Doors Locked	H-Alarm	9	303
577	ID77 - Exhaust Pressure Sw.	H-Alarm	9	303
578	ID78 - Chamber Unlock	N-Alarm	9	303
579	ID79 - Compressed Air Press. Sw.	H-Alarm	9	303
581	ID81 - Gas Panel Compr. Air Press. Sw.	H-Alarm	9	303
582	ID82 - Rotation Group Sw.	H-Alarm	9	303
583	ID83 - Overtemperature Relay Circuit	H-Alarm	9	303
584	ID84 - Cooling Pumps Door Open	H-Alarm	9	303
587	ID87 - Process Chamber Cover Sw.	N-Alarm	9	303
300	AL300 - LoadLock Overpressure	Warning or H-Alarm	10 or 9	303
301	AL301 - LoadLock Underpressure	Warning or H-Alarm	10 or 9	303
302	AL302 - WHC Overpressure	Warning, H-Alarm or N-Alarm	10 or 9	303
303	AL303 - WHC Underpressure	Warning, H-Alarm or N-Alarm	10 or 9	303
307	AL307 - Error Fast Zero position	H-Alarm	9	303
308	AL308 - Error Laser Read Trouble	H-Alarm	9	303
309	AL309 - SX3 Trouble	H-Alarm	9	303
310	AL310 - INJECT 3_2 Trouble	H-Alarm	9	303
311	AL311 - Pumps on with tank empty	Warning	10	303
312	AL312 - Warm Idle Max Temp trouble	H-Alarm	9	303
1000	AL1000 - Generator Alarm	H-Alarm	9	303
1001	AL1001 - Robot 1 Alarm	H-Alarm	9	303
1002	AL1002 - Robot 2 Alarm	H-Alarm	9	303
1003	AL1003 - Wafer Position Alarm	H-Alarm	9	303

PE3061D - Events Configuration

Event ID	String	Description (PE3061D)
1	Status ST_NOCONF	Reactor switched to NOCONF status: reactor is not configured
2	Status ST_FREE	Reactor switched to FREE status: reactor is idle and waiting for input
3	Status ST_RUN	Reactor switched to RUN status: reactor is processing a recipe or a group
4	Status ST_ABORT	Reactor switched to ABORT status: the recipe or group has been aborted
5	Status ST_HOLD	Reactor switched to HOLD status: the recipe running has been paused and the reactor is waiting for a GO command to complete the process
7	Status ST_START	Reactor switched to START status: reactor is still idle and waiting for a recipe or group to be started
8	Status ST_RUNMANUAL	Reactor switched to RUNMANUAL status: a recipe has been started manually (see GUI User Guide)
9	Status ST_ALARM	Reactor switched to ALARM status: an alarm has occurred
10	Status ST_WARNING	Reactor switched to WARNING status: a warning has occurred
100	Phase EX_PRE_N2	Belljar switched to PRE_N2 phase: belljar is being filled with nitrogen
101	Phase EX_PREPURGE_H2	Belljar switched to PREPURGE_N2 phase: belljar is being filled with hydrogen
102	Phase EX_STANDBY_LOAD	Belljar switched to STANDBY_LOAD phase: belljar is waiting robots to complete loading wafers on susceptor
103	Phase EX_RAMP_UP	Belljar switched to RAMP_UP phase: belljar is heating up to a fixed value before starting process with ramp-up algorithm
104	Phase EX_PROCESS	Belljar switched to PROCESS phase: belljar is running the recipe selected
105	Phase EX_RAMP_DOWN	Belljar switched to RAMP_DOWN phase: belljar is cooling down with ramp-down algorithm (opposite of ramp-up)
106	Phase EX_COOL_DOWN	Belljar switched to COOL_DOWN phase: belljar is cooling down
107	Phase EX_STANDBY_UNLOAD	Belljar switched to STANDBY_UNLOAD phase: belljar is waiting robots to complete unloading wafers from susceptor
108	Phase EX_IDLE_H2	Belljar switched to IDLE_H2 phase: belljar is being filled with hydrogen
200	GenStatus ON	Generator has been switched ON
201	GenStatus OFF	Generator has been switched OFF
202	ChangedCassetteA IN	Cassette A has been put in its position
203	ChangedCassetteA OUT	Cassette A has been removed
204	ChangedCassetteB IN	Cassette B has been put in its position
205	ChangedCassetteB OUT	Cassette B has been removed
206	GateStatus Open	The internal gate has been opened
207	GateStatus Close	The internal gate has been closed
208	Rotation Running	Susceptor rotation motor has been switched on
209	Rotation Stopped	Susceptor rotation motor has been switched off
210	Reactor REMOTE	Reactor switched to REMOTE control state
211	Reactor LOCAL	Reactor switched to LOCAL control state
212	Reactor In Maintenance	Reactor has gone to maintenance mode
213	Reactor Out of Maintenance	Reactor is no more in maintenance mode
215	Reactor Cooling	Reactor have to be warmed-up softly
300	Modified Configuration	Reactor configuration has been modified
301	Read Message From Host	A screen message has arrived from host

Event ID	String	Description (PE3061D)
302	Insert Lot	A lot number has been inserted
303	Reset All Alarm	All alarms and warnings have been reset
304	Group End	A group of recipes is over
305	Waiting Cassette	Reactor is waiting for a cassette operation (load, unload, wafer missing, …) by an operator
306	Cassette A scanned	The A cassette (left) has been scanned. NOTE: the A scan, triggers also the event 308
307	Cassette G scanned	The G cassette (right) has been scanned. NOTE: the G scan, triggers also the event 309
308	Cassette A - wafer unloaded	A wafer was unloaded in the A cassette
309	Cassette G - wafer unloaded	A wafer was unloaded in the G cassette
310	Susceptor - wafer loaded	A wafer was loaded on the susceptor
313	Bubbler 1 Refill started	Bubbler 1 started the TCS refill from the facilities
314	Bubbler 2 Refill started	Bubbler 2 started the TCS refill from the facilities
1000	Spooling Activated	Spooling has been activated
1001	Spooling Deactivated	Spooling has been deactivated
1002	Spooling Transmit Failure	Failure in spooling transmission
1011	EVENTDROPPED	An event has been deleted (the event has been disabled at reactor level)
1012	EVENTDROPPED1	An event has been deleted because one or more variables are missing in its associated report (those variables -not the event- have been disabled at reactor level and cannot be associated to any report. The event must be reconfigured as if it never existed

PE3061D - Equipment Constants Configuration

ECID	Name	Description (PE3061D)	Read Write	Info
0	H2SetHeatUp	H2 main set (heat up)	R	Slm
1	PowerRampTime	Ramp time for power	R	Min
2	EndPowerRampValue	End value for power ramp	R	Kw
3	TempRampTimeHeatUp	Ramp time for temp. heat up	R	Min
4	VentTime	Vent time	R	Min
5	H2TempRampTime	H2/Temp ramp time	R	Min
6	H2TempEndTime	H2/Temp stab time	R	Min
7	H2MainSetEnd	H2 main set (Step end)	R	Slm
8	BaseTime	Zero to set time i mim:sec	R	
100	FlowThermalDelay	Flow & Thermal switch delay	R	Sec
101	H2ShaftDeposit	H2 Shaft Deposit	R	slm
102	H2ShaftEtch	H2 Shaft Etch	R	slm
103	nSusceptorWafer	Susceptor max wafers	R	
104	FlowVenturiWaferLoad	Flow Venturi Wafer Load	R	slm
105	FlowVenturiWaferUnLoad	Flow Venturi Wafer Unload	R	slm
106	LoadLockALLVacuum	LoadLock Pressure A Vacuum	R	mBar
107	LoadLockALLRefill	LoadLock Pressure B Pressure	R	mBar
108	PirometerHome	Pirometer Home	R	mm
109	SusceptorSpeed	Susceptor speed	R	g/min
110	SxSusceptorSpeed	Deposit Susceptor speed	R	g/min
111	MinN2FlowMwter	Min N2 Flow	R	slm
112	DeltaPowerDissip	Delta Power Dissipate	R	KW
113	DeltaTempTrouble	Delta Temperature Trouble	R	
114	BubblerRefillTime	Bubbler Refill Time	R	sec
115	DemiTimeout	Demin. Water Cooling Frequency	R	min
116	DemiOutletTime	Demin. Water Cooling Outlet Time	R	sec
117	WarmUpTimeout	Warm Up Timeout	R	min
118	RetryWaferLost	Number of retry to get wafer	R	
119	RetryFlowVenturiWaferUnLoad	Retry Flow Venturi Wafer Unload	R	slm
120	WarmIdlePower	Warm Idle Power	R	KW
121	WarmIdleMaxTemperature	Warm Idle Max Temperature	R	°C
123	LaserReadLimitValue	Laser Read Limit Value *(in **Configuration** > **Option** TAB)*	R	Volt
124	PercDutyCycleON	DutyCyle Time ON *(in **Configuration** > **Ramp-up** TAB)*	R	%
125	SoftwareOptions	SoftwareOptions *(all the bits in **Configuration** > **Option** TAB)*	R	
200	PreN2Time	Pre N2 Time	R	Sec
201	PreN2Flow	Pre N2 Flow	R	Slm
202	PrePurgeH2Time	Pre-Purge H2 Time	R	Sec
203	PrePurgeH2Flow	Pre-Purge H2 Flow	R	Slm
204	PrePurgeH2Timeout	Pre-Purge H2 Timeout	R	Sec
205	CoolDownH2Time	Cool-Down Time	R	Sec
206	CoolDownH2Flow	Cool-Down Flow	R	Slm
207	VatExternalTime	VAT External Time	R	Sec
208	VatExternalFlow	VAT Ext Flow	R	Slm
209	VatInternalTime	VAT Internal Time	R	Sec

ECID	Name	Description (PE3061D)	Read Write	Info
210	VatInternalFlow	VAT Internal Flow	R	Slm
211	IdleH2Time	Idle H2 Time	R	Sec
212	IdleH2Flow	Idle H2 Flow	R	Slm
213	VatExternalNCcycle	VAT External n. cycle	R	
214	VatExternalLLRefill	VAT Ext Load Lock Refill Flow	R	Slm
215	RampTimeOpenGate	Ramp Time Open Gate	R	Sec
216	StartFlowOpenGate	Start Flow Open Gate	R	Slm
217	EndFlowOpenGate	End Flow Open Gate	R	Slm
218	EndFlowCloseGate	End Flow Close Gate	R	Slm
300	H2_Main	H2 Main range (FC10)	R	Slm
301	Source_1	Source 1 range (FC21)	R	Slm
302	Source_2	Source 2 range (FC22)	R	Slm
303	Source_3	Source 3 range (FC23)	R	Slm
304	Dope_1	Dope 1 range (FC53)	R	Slm
305	Dope_2	Dope 2 range (FC63)	R	Sccm
306	Dope_3	Dope 3 range (FC73)	R	Sccm
307	Dilute_1	Dilute 1 range (FC51)	R	Sccm
308	Dilute_2	Dilute 2 range (FC61)	R	Slm
309	Dilute_3	Dilute 3 range (FC71)	R	Slm
310	Inject_1	Inject 1 range (FC52)	R	Slm
311	Inject_2	Inject 2 range (FC62)	R	Sccm
312	Inject_3	Inject 3 range (FC72)	R	Sccm
313	Inject_3_2	Inject 3_2 range (FC74)	R	Sccm
314	HCL	HCl range (FC80)	R	Sccm
315	HCLFast	HCl fast range (FC83)	R	Slm
316	N2_VAT	N2_VAT range (FC92)	R	Slm
317	N2_Chambre	N2_Chamber range (FC91)	R	Slm
318	N2_Flow	N2 Flow range (FM95)	R	Slm
319	H2_Shaft	H2 Shaft range (FC12)	R	Slm
320	H2_Left	H2_Left range (FM14)	R	Slm
321	H2_Center	H2_Center range (FM15)	R	Slm
322	H2_Right	H2_Right range (FM16)	R	Slm
323	N2_Venturi	N2 Venturi range (FC93)	R	Slm
324	H2_LeftLeft	H2_LeftLeft range (FM17)	R	Slm
325	H2_RightRight	H2_RightRight range (FM18)	R	Slm
326	Power	Max Reactor Power	R	KW
327	Temp	Max Reactor Temperature	R	°C
400	SDTSource_1	Source 1	R	
401	SDTSource_2	Source 2	R	
402	SDTSource_3	Source 3	R	
403	SDTDope_1	Dope 1	R	
404	SDTDope_2	Dope 2	R	
405	SDTDope_3	Dope 3	R	
500	HCL_min	HCL min	R	Psi
501	HCL_max	HCL max	R	Psi
502	Dope1_min	Dope1 min	R	Psi
503	Dope1_max	Dope1 max	R	Psi
504	Dope2_min	Dope2 min	R	Psi
505	Dope2_max	Dope2 max	R	Psi

ECID	Name	Description (PE3061D)	Read Write	Info
506	Dope3_min	Dope3 min	R	Psi
507	Dope3_max	Dope3 max	R	Psi
600	H2FlowStart	H2 Start flow	R	Slm
601	H2FlowStab	H2 Stab flow	R	Slm
602	H2TimeStart	H2 Start time	R	Sec
603	H2TimeRamp	H2 Ramp time	R	Sec
604	H2TimeStab	H2 Stab time	R	Sec
605	H2TimeOut	H2 Time-out	R	Sec
606	PowerStart	Power Start value	R	KW
607	PowerStab	Power Stab value	R	KW
608	PowerTimeStart	Power Start time	R	Sec
609	PowerTimeRamp	Power Ramp time	R	Sec
610	PoweTimerStab	Power Stab time	R	Sec
611	PowerTimeOut	Power Time-out	R	Sec
700	H2FlowStart	H2 Start flow	R	Slm
701	H2FlowStab	H2 Stab flow	R	Slm
702	H2TimeStart	H2 Start time	R	Sec
703	H2TimeRamp	H2 Ramp time	R	Sec
704	H2TimeStab	H2 Stab time	R	Sec
705	H2TimeOut	H2 Time-out	R	Sec
706	PowerStart	Power Start value	R	KW
707	PowerStab	Power Stab value	R	KW
708	PowerTimeStart	Power Start time	R	Sec
709	PowerTimeRamp	Power Ramp time	R	Sec
710	PoweTimerStab	Power Stab time	R	Sec
711	PowerTimeOut	Power Time-out	R	Sec
800	H2FlowStart	H2 Start flow	R	Slm
801	H2FlowStab	H2 Stab flow	R	Slm
802	H2TimeStart	H2 Start time	R	Sec
803	H2TimeRamp	H2 Ramp time	R	Sec
804	H2TimeStab	H2 Stab time	R	Sec
805	H2TimeOut	H2 Time-out	R	Sec
806	PowerStart	Power Start value	R	KW
807	PowerStab	Power Stab value	R	KW
808	PowerTimeStart	Power Start time	R	Sec
809	PowerTimeRamp	Power Ramp time	R	Sec
810	PoweTimerStab	Power Stab time	R	Sec
811	PowerTimeOut	Power Time-out	R	Sec
900	H2FlowStart	H2 Start flow	R	Slm
901	H2FlowStab	H2 Stab flow	R	Slm
902	H2TimeStart	H2 Start time	R	Sec
903	H2TimeRamp	H2 Ramp time	R	Sec
904	H2TimeStab	H2 Stab time	R	Sec
905	H2TimeOut	H2 Time-out	R	Sec
906	PowerStart	Power Start value	R	KW
907	PowerStab	Power Stab value	R	KW
908	PowerTimeStart	Power Start time	R	Sec
909	PowerTimeRamp	Power Ramp time	R	Sec
910	PoweTimerStab	Power Stab time	R	Sec

ECID	Name	Description (PE3061D)	Read Write	Info
911	PowerTimeOut	Power Time-out	R	Sec

PE3061D - Status Variables Configuration

SVID	Name	Format	Description (PE3061D)	Read Write
3000	NumbersOfRuns	U4	Numbers Of Runs	R
3001	NumbersOfRunsP	U4	Numbers Of Runs (Partial)	R
3002	ProcessTime	U4	Process Time	R
3003	WafersProcessed	U4	Wafers Processed	R
3004	WafersProcessedP	U4	Wafers Processed(Partial)	R
3005	Hydrogen	U4	Hydrogen	R
3006	RFTime	U4	RF Time	R
3007	Source1	U4	Source 1	R
3008	Source2	U4	Source 2	R
3009	Source3	U4	Source 3	R
3010	Hcl	U4	Hcl	R
3011	Micron	U4	Micron	R
3100	H2_Main_Flow	U4	FC10-H2 Main Flow	R
3101	H2_Main_Stat	U4	FC10-H2 Main Status: 0 = OFF 1 = ON 2 = VENT 3 = BELL	
3102	H2_Main_Set	U4	FC10-H2 Main Set	R
3104	H2_Shaft_Flow	U4	FC12-H2 Shaft Flow	R
3105	H2_Shaft_Stat	U4	FC12-H2 Shaft Status: 0 = OFF 1 = ON 2 = VENT 3 = BELL	
3106	H2_Shaft_Set	U4	FC12-H2 Shaft Set	R
3108	N2_Flow_Flow	U4	FM95-N2 Flow Flow	R
3110	N2_Flow_Set	U4	FM95-N2 Flow Set	R
3112	Source_1_Flow	U4	Sx1 -Source 1 Flow	R
3113	Source_1_Stat	U4	Sx1 -Source 1 Status: 0 = OFF 1 = ON 2 = VENT 3 = BELL	
3114	Source_1_Set	U4	Sx1 -Source 1 Set	R
3116	Source_2_Flow	U4	Sx2 -Source 2 Flow	R
3117	Source_2_Stat	U4	Sx2 -Source 2 Status: 0 = OFF 1 = ON 2 = VENT 3 = BELL	
3118	Source_2_Set	U4	Sx2 -Source 2 Set	R
3120	Source_3_Flow	U4	Sx3 -Source 3 Flow	R
3121	Source_3_Stat	U4	Sx3 -Source 3 Status: 0 = OFF 1 = ON 2 = VENT 3 = BELL	
3122	Source_3_Set	U4	Sx3 -Source 3 Set	R
3124	Dope_1_Flow	U4	FC53-Dope 1 Flow	R

SVID	Name	Format	Description (PE3061D)	Read Write
3125	Dope_1_Stat	U4	FC53-Dope 1 Status: 0 = OFF 1 = ON 2 = VENT 3 = BELL	
3126	Dope_1_Set	U4	FC53-Dope 1 Set	R
3128	Dope_2_Flow	U4	FC63-Dope 2 Flow	R
3129	Dope_2_Stat	U4	FC63-Dope 2 Status: 0 = OFF 1 = ON 2 = VENT 3 = BELL	
3130	Dope_2_Set	U4	FC63-Dope 2 Set	R
3132	Dope_3_Flow	U4	FC73-Dope 3 Flow	R
3133	Dope_3_Stat	U4	FC73-Dope 3 Status: 0 = OFF 1 = ON 2 = VENT 3 = BELL	
3134	Dope_3_Set	U4	FC73-Dope 3 Set	R
3136	Dilute_1_Flow	U4	FC51-Dilute 1 Flow	R
3137	Dilute_1_Stat	U4	FC51-Dilute 1 Status: 0 = OFF 1 = ON 2 = VENT 3 = BELL	
3138	Dilute_1_Set	U4	FC51-Dilute 1 Set	R
3140	Dilute_2_Flow	U4	FC61-Dilute 2 Flow	R
3141	Dilute_2_Stat	U4	FC61-Dilute 2 Status: 0 = OFF 1 = ON 2 = VENT 3 = BELL	
3142	Dilute_2_Set	U4	FC61-Dilute 2 Set	R
3144	Dilute_3_Flow	U4	FC71-Dilute 3 Flow	R
3145	Dilute_3_Stat	U4	FC71-Dilute 3 Status: 0 = OFF 1 = ON 2 = VENT 3 = BELL	
3146	Dilute_3_Set	U4	FC71-Dilute 3 Set	R
3148	Inject_1_Flow	U4	FC52-Inject 1 Flow	R
3149	Inject_1_Stat	U4	FC52-Inject 1 Status: 0 = OFF 1 = ON 2 = VENT 3 = BELL	
3150	Inject_1_Set	U4	FC52-Inject 1 Set	R
3152	Inject_2_Flow	U4	FC62-Inject 2 Flow	R
3153	Inject_2_Stat	U4	FC62-Inject 2 Status: 0 = OFF 1 = ON 2 = VENT 3 = BELL	
3154	Inject_2_Set	U4	FC62-Inject 2 Set	R

SVID	Name	Format	Description (PE3061D)	Read Write
3156	Inject_3_Flow	U4	FC72-Inject 3 Flow	R
3157	Inject_3_Stat	U4	FC72-Inject 3 Status: 0 = OFF 1 = ON 2 = VENT 3 = BELL	
3158	Inject_3_Set	U4	FC72-Inject 3 Set	R
3160	Inject_3_2_Flow	U4	FC74-Inject 3_2 Flow	R
3161	Inject_3_2_Stat	U4	FC74-Inject 3_2 Status: 0 = OFF 1 = ON 2 = VENT 3 = BELL	
3162	Inject_3_2_Set	U4	FC74-Inject 3_2 Set	R
3164	HCL_Flow	U4	FC80-HCl Flow	R
3165	HCL_Stat	U4	FC80-HCl Status: 0 = OFF 1 = ON 2 = VENT 3 = BELL	
3166	HCL_Set	U4	FC80-HCl Set	R
3168	HCLFast_Flow	U4	FC83-HCl fast Flow	R
3169	HCLFast_Stat	U4	FC83-HCl fast Status: 0 = OFF 1 = ON 2 = VENT 3 = BELL	
3170	HCLFast_Set	U4	FC83-HCl fast Set	R
3172	N2_VAT_Flow	U4	FC92-N2_VAT Flow	R
3173	N2_VAT_Stat	U4	FC92-N2_VAT Status: 0 = OFF 1 = ON 2 = VENT 3 = BELL	
3174	N2_VAT_Set	U4	FC92-N2_VAT Set	R
3176	N2_Chambre_Flow	U4	FC91-N2_Chamber Flow	R
3177	N2_Chambre_Stat	U4	FC91-N2_Chamber Status: 0 = OFF 1 = ON 2 = VENT 3 = BELL	
3178	N2_Chambre_Set	U4	FC91-N2_Chamber Set	R
3180	N2_Venturi_Flow	U4	FC93-N2 Venturi Flow	R
3181	N2_Venturi_Stat	U4	FC93-N2 Venturi Status: 0 = OFF 1 = ON 2 = VENT 3 = BELL	
3182	N2_Venturi_Set	U4	FC93-N2 Venturi Set	R
3184	N2_Flow	U4	N2-Switch Flow	R
3185	N2_Stat	U4	N2-Switch Status: 0 = OFF 1 = ON 2 = VENT 3 = BELL	

SVID	Name	Format	Description (PE3061D)	Read Write
3186	N2_Set	U4	N2-Switch Set	R
3200	VR_POWER_SET	U4	Power Setpoint	R
3201	VR_POWER_EROGATA	U4	Power Feed-Back	R
3202	VR_TEMP_SET	U4	Temperature Setpoint	R
3203	VR_TEMP_REAL	U4	Temperature Feed-Back	R
3204	BARATRON	U4	Belljar Pressure	R
3205	VR_MOTORPOS	U4	Pyrometer Position	R
3206	H2_LEFT_FLOW	U4	Left Injection Flow	R
3207	H2_CENTER_FLOW	U4	Center Injection Flow	R
3208	H2_RIGHT_FLOW	U4	Right Injection Flow	R
3209	POLL_STATUS	U4	Reactor Status. It's the sum of the following values: • 0: reactor not configured. • 1: reactor in IDLE (N2), ready to go • 2: reactor in RUN, running a working phase (ramp up, process, standby load, etc.) • 3: reactor in ABORT • 4: reactor in HOLD, i.e. in PROCESS phase and put in HOLD • 5: reactor in post-production, i.e. after an abort or in IDLE H2 • 6: reactor received the START command and it's in PRE PURGE PHASE, waiting operator's choice regarding recipes or groups • 7: reactor e' in RUN with a recipe started singularly, without a group, i.e. with GUI command Start->Manual • 64: reactor in warning • 128: reactor in alarm For instance, decimal value 66. 66 = 64 + 2, i.e. reactor in warning (64) and in RUN (2).	R
3210	POLL_PHASE	U4	Reactor Phase • 0 = reactor not configured • 1 = phase IDLE (N2) • 2 = phase PRE PURGE • 3 = phase STAND BY LOAD • 4 = phase RAMP UP • 5 = phase PROCESS • 6 = phase RAMP DOWN • 7 = phase COOL DOWN • 8 = phase STAND BY UNLOAD • 9 = phase IDLE H2	R
3211	POLL_GEN_STATUS	U4	Generator Status	R
3212	POLL_RECIPESTEP	U4	Recipe Step	R
3213	POLL_MOTORSPEED	U4	Susceptor Motor Speed (rpm)	R
3214	POLL_TIME_EXEC	U4	Recipe Execution Time	R
3215	POLL_GATE_STATUS	U4	Belljar Gate Status	R
3216	POLL_VATINT_STATUS	U4	Internal VAT Status	R
3217	POLL_VATEXT_STATUS	U4	External VAT Status	R
3218	POLL_CASSETTE_A	U4	Cassette A (left) presence • 73 or 74 = cassette present • 79 = cassette absent	R
3219	POLL_CASSETTE_B	U4	Cassette G (right) presence • 73 or 74 = cassette present • 79 = cassette absent	R

SVID	Name	Format	Description (PE3061D)	Read Write
3220	INT_VR_ACTIVE_GROUP	String	Active Group	R
3221	INT_VR_ACTIVE_RECIPE	String	Active Recipe	R
3222	LOTTO_LAVORAZIONE_A	String	Running Lot on Cassette A	R
3223	INT_VR_CLOCK	String	Internal Clock	R
3224	INT_VR_LastEventID	U4	Last Event ID	R
3225	TPD_9_WHC	U4	Pressure in the wafer handling chamber	R
3226	TPD_10_LOADLOCK	U4	Pressure in the loadlock	R
3227	TPD5_DOPE1	U4	Dope1 line pressure	R
3228	TPD6_DOPE2	U4	Dope2 line pressure	R
3229	TPD7_DOPE3	U4	Dope3 line pressure	R
3230	TPD8_HCL	U4	HCl line pressure	R
3231	ROBOT1_SLOT	U4	Current cassette slot of moving wafer slots are numbered from 1 (1st slot = 1; 2nd = 2; ...; 25th slot = 25)	R
3232	ROBOT2_POCKET	U4	Current susceptor pocket of moving wafer: pockets are numbered from 1 (1st pocket = 1; 2nd pocket = 2; etc.)	R
3233	ROBOTS_FROM_STATION	U4	Station (cassette A, G or susceptor) from which the moving wafer is coming: • 65 = cassette A (left) • 71 = cassette G (right) • 83 = susceptor	R
3234	ROBOTS_TO_STATION	U4	Station (cassette A, G or susceptor) to which the moving wafer is going: • 65 = cassette A (left) • 71 = cassette G (right) • 83 = susceptor	R
3235	CASSETTE_A_MAP	String	Cassette A representation. Numbers left to right are the wafers status bottom to top. I.e. first left char in the string represents the first bottom wafer slot in the cassette. Possible status • 0 = wafer not present • 1 = wafer present and ready to be processed • 2 = wafer detected in wrong position (i.e. across two slots) • 3 = wafer unloaded and correctly processed • 4 = wafer unloaded and not processed • 5 = wafer unloaded after abort • 6 = wafer moving to/from loadlock	R
3236	CASSETTE_G_MAP	String	Cassette G representation. Numbers left to right are the wafers status bottom to top. I.e. first left char in the string represents the first bottom wafer slot in the cassette. Possible status • 0 = wafer not present • 1 = wafer present and ready to be processed • 2 = wafer detected in wrong position (i.e. across two slots) • 3 = wafer unloaded and correctly processed • 4 = wafer unloaded and not processed • 5 = wafer unloaded after abort • 6 = wafer moving to/from loadlock	R

SVID	Name	Format	Description (PE3061D)	Read Write
3237	SUSCEPTOR_DISABLED_POCKET	String	Integer number which represents bit by bit the status of each susceptor pocket. Bit meaning: • 0: pocket enabled • 1: pocket disabled Order of each bit: • 1st bit (bit 0 right to left) > pocket 1 • 2nd bit (bit 1 right to left) > pocket 2 • … • Nth bit (bit n-1 right to left) > pocket n Example: SVID 3237 = 134. 134 = 128 + 4 + 2 = $2^7 + 2^2 + 2^1$. It means pocket 8 (bit7), , pocket 3 (bit 2) and pocket 2 (bit 1) disabled	R
3238	VR_TEMP_REAL_2	U4	Secondary process pyrometer (if available)	R
3239	VR_WAIT_COOL_TIME	U4	Time to wait before switching off cooling water pumps	R
3240	VR_AI_PYROFRONT	U4	Quartz front pyrometer read-out (if available)	R
3241	VR_AI_PYROBACK	U4	Quartz back pyrometer read-out (if available)	R
3242	LOTTO_LAVORAZIONE_B	String	Running Lot on Cassette G	R
10005	Control State	U4	Control State actual status identifier. Possible values: 0: OFF LINE STATE 1: EQUIPMENT OFF LINE STATE 2: ATTEMPT ON LINE STATE 3: HOST OFF LINE STATE 4: ON LINE STATE 5: REMOTE STATE 6: LOCAL STATE	R
10009	SpoolCountTotal	U4	Spooled messages maximum number	R

PE3061D - Remote Commands Configuration

Command	Parameters (SECS format)	Description (PE3061D)
START	---	Gets the reactor ready to run a recipe with command RUN
RUN	FIRST (U4); SKIP (U4); CASSETTEID (U4); GROUPCONT (U4); LOTID (ASCII);	Runs the group selected with PPSELECT command. Parameters: 1) **'FIRST'** parameter tells the reactor which is the first wafer to load from the selected cassette. If omitted, the first wafer is the first from the bottom of the cassette 2) **'SKIP'** parameter: a. if 0, the group executes the first recipe b. if 1, the group don't execute the first recipe (normally used with etch) c. if omitted, see 2.a 3) **'CASSETTEID'** parameter: a. if 0, the group starts loading from Cassette A b. if 1, the group starts loading from Cassette G c. if omitted, see 3.a 4) **'GROUPCONT'** parameter: a. if 0, the group loads the wafers according to the reactor configuration and stops when the cassette(s) is (are) processed or the runs of the group completed b. if 1, the group starts running in loop the sequence of recipes in the group and stops only upon an operator command or upon lack of unprocessed wafers. This behaviour is also known as "Group Continuous" c. If omitted, see 4.a 5) **'LOTID'** parameter is a string: a. If GROUPCONT is set to 0, the LOTID is associated to the cassette set with CASSETTEID b. If GROUPCONT is set to 1, the LOTID is associated to both cassettes. c. If omitted, it is an empty string The order of the parameters is not important, but some parameters combination might be incoherent and will lead to an error
HOLD	---	Pauses the process
GO	---	Resumes the process
ABORT	---	Aborts the process
PPSELECT	GROUP (Ascii)	Selects the specified GROUP

STATE MODELS

Communication Model

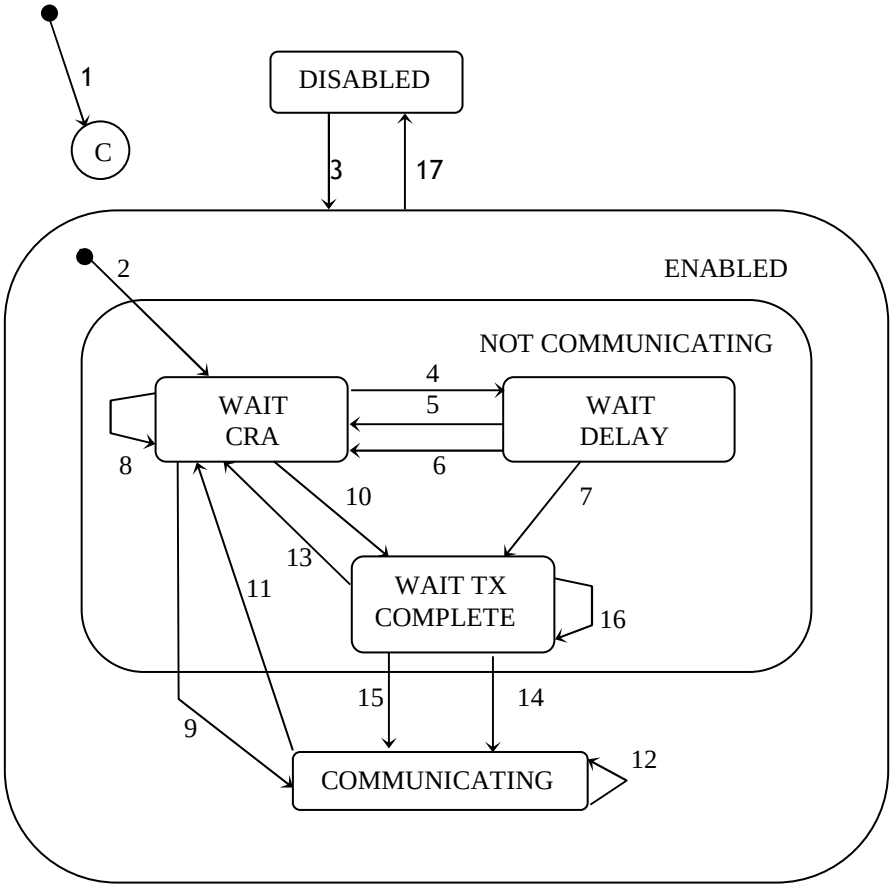

Communication State Transition Table

#	CURRENT STATE	TRIGGER	NEW STATE	ACTION	COMMENT
1	(Entry to Communication)	System initialization	System Default	None	
2	(Entry to ENABLE)	Any entry to ENABLED state	WAIT CRA	Initialize communications. Set CommDelay timer "expired." Send S1, F13	May enter from system initialization to ENABLED or through operator switch to ENABLED
3	DISABLED	Operator switches from DISABLED to ENABLED	WAIT CRA	Initialize communications. Set CommDelay timer "expired." Send S1, F13	
4	WAIT CRA	Connection transaction failure	WAIT DELAY	Initializer CommDelay timer	Do not send error message. Wait for timer to expire.
5	WAIT DELAY	CommDelay timer expired	WAIT CRA	Send S1, F13.	Wait for S1, F14, May receive S1, F13 from Host
6	WAIT DELAY	Received a message other than S1, F13	WAIT CRA	Discard message. No reply. Set timer "expired." Send S1, F13	Indicateds opportunity to establish communications
7	WAIT DELAY	Received S1, F13	WAIT TX COMPLETE	Send S1, F14 with COMMACK = 0	Equipment received S1F13 and has not sent S1F13
8	WAIT CRA	Received a message other than S1, F13 or F14	WAIT CRA	Discard message. No reply	Continue to wait for S1F14
9	WAIT CRA	Received S1, F14 with COMMACK = 0	COMMUNI-CATING	None	Communication established. Normal path
10	WAIT CRA	Received S1, F13	WAIT TX COMPLETE	Send S1, F14 with COMMACK = 0.	Equipment sent S1, F13; and Host sends S1, F13 (connect collision)
11	COMMUNICATING	Communication failure	WAIT CRA	De-queue all messages queued to send. Set timer "expired." Send S1, F13.	If spooling is active direct these messages to the spool. Otherwise they will be discarded
12	COMMUNI-CATING	Receive any message	COMMUNI-CATING	If S1, F13 received, send S1F14 with COMMACK = 0	Normal Communications
13	WAIT TX COMPLETE	Communication failure	WAIT CRA	Discard all messages queued to send. Set timer "expired." Send S1, F13	Equipment attempt to send S1, F14 failed
14	WAIT TX COMPLETE	S1, F14 transmission completed successfully	COMMUNI-CATING	None	Normal path to completion. Communications established
15	WAIT TX COMPLETE	Received S1, F14 with COMMACK = 0	COMMUNI-CATING	None	
16	WAIT TX COMPLETE	Received a message	WAIT TX	Discard message.	

#	CURRENT STATE	TRIGGER	NEW STATE	ACTION	COMMENT
		other than S1, F14	COMPLETE	No reply	
17	ENABLED (ANY SUBSTATE)	Operatior switched from ENABLED to DISABLED state	DISABLED	De-queue any messages queued to send	

Control Model

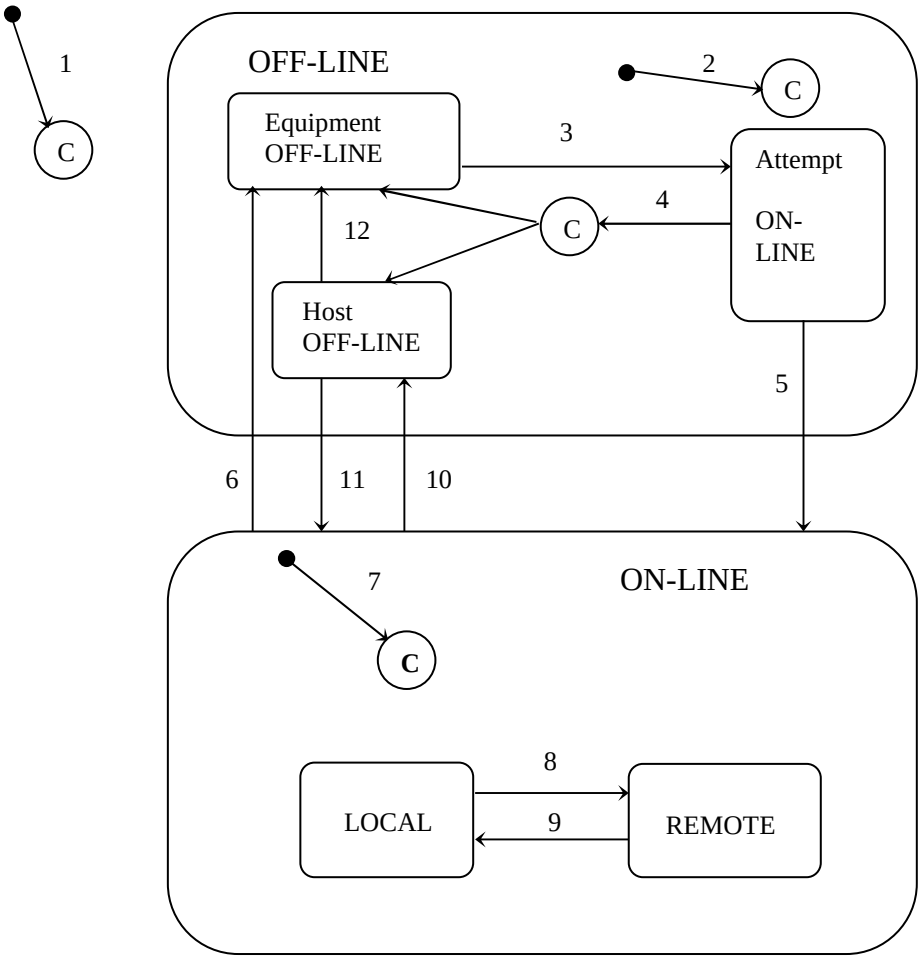

Control State Transition Table

#	CURRENT STATE	TRIGGER	NEW STATE	ACTION	COMMENT
1	(Entry)	System initialization	CONTROL	None	
2	(Undefined)	Entry into OFF-LINE	Attent ON-LINE	None	Equipment goes to any OFF-LINE substate
3	EQUIPMENT ON-LINE	Operator selects ON-LINE	ATTEMPT-ON-LINE	S1,F1 from equipment to Host when ATTEMPT ON-LINE activated	
4	ATTEMPT ON-LINE	S1,F0		NONE	May due ti communications failure, reply time-out or receipt of S1,F0
5	ATTEMPT ON-LINE	Equipment receives expected S1,F2 message from Host	ON-LINE	None	Host is notified of transition to ON-LINE at transtion 7
6	ON-LINE	Operator selects OFF-lINE	EQUIPMENT OFF-LINE	Signal “Equipment OFF-LINE” to Host	
7	(Undefined)	Entry into ON-LINE state	ON-LINE state condition upon toggle state of REMOTE/LOCAL	None	“Control State LOCAL” or “Control State REMOTE” events occurs.
8	LOCAL	Operator select REMOTE button	REMOTE	Signal “Operator Command” to Host.	
9	REMOTE	Operator selects LOCAL	LOCAL		
10	ON-LINE	Equipment accepts “Set OFF-LINE” message from Host (S1,F1)	HOST OFF-LINE	Signal “Equipment OFF-LINE” to Host	
11	HOST OFF-LINE	Equipment accepts host request to go ON-LINE (S1,F13)	ON-LINE	None	
12	HOST OFF-LINE	Operator selects OFF-LINE	EQUIPMENT OFF-LINE	Signal “Equipment OFF-LINE” to Host	

MESSAGES SUMMARY

Host to Equipment

This section describes primary SECS messages marked sent by the Host, and the associated reply messages from the Equipment.

In the column headed “R”, those messages marked with “R” are permitted only when Control State is “Remote”. The Equipment will refuse these primary messages from the Host when Control State is “Local”.

Primary	Reply	R
S1F1	S1F2	--
S1F3	S1F4	--
S1F11	S1F12	--
S1F13	S1F14	--
S1F15	S1F16	--
S1F17	S1F18	--
S2F13	S2F14	--
S2F15	S2F16	--
S2F17	S2F18	--
S2F29	S2F30	--
S2F31	S2F32	--
S2F33	S2F34	--
S2F35	S2F36	--
S2F37	S2F38	--
S2F39	S2F40	--
S2F41	S2F42	R
S5F3	S5F4	--
S5F5	S5F6	--
S6F15	S6F16	--
S6F19	S6F20	--
S6F23	S6F24	--
S7F1	S7F2	--
S7F3	S7F4	--
S7F5	S7F6	--
S7F17	S7F18	--
S7F19	S7F20	--
S10F3	S10F4	--
S10F5	S10F6	--

Equipment to Host

This section describes primary SECS messages sent by the Equipment, and the associated reply messages from the Host.

Primary	Reply
S1F1	S1F2
S1F13	S1F14
S5F1	S5F2
S6F11	S6F12
S9F1	--
S9F3	--
S9F5	--
S9F7	--
S9F9	--

DATA ITEM DICTIONARY

Notation

Error codes above SECS error code range are documented in green color.

Item Format Table

Format (octal)	Meaning
00	List of items
10	Binary
11	Boolean
20	ASCII
21	JIS-8
30	8-byte integer (signed)
31	1-byte integer (signed)
32	2-byte integer (signed)
34	4-byte integer (signed)
40	8-byte foating point
44	4-byte foating point
50	8-byte integer (unsigned)
51	1-byte integer (unsigned)
52	2-byte integer (unsigned)
54	4-byte integer (unsigned)

ACKC5

Format: 10
Description: Acknowledge code, 1 byte
0 = Accepted
>0 = Error, not accepted
Where Used; S5F2, F4

ACKC6

Format: 10
Description: Acknowledge code, 1 byte
0 = Accepted
>0 = Error, not accepted
Where Used; S6F12

ACKC7

Format: 10
Description: Acknowledge code, 1 byte
0 = Accepted
1 = Permission not granted
2 = Length error
3 = Matrix overflow
4 = PPID not found or inquiry granted for another PPID
5 = Mode unsupported
6 = PPID writing error (i.e. read-only)
7 = Internal error
8 = PPID Syntax Error
9 = PPID Not Executable
10 = PPID Read Error
11 = PPID Invalid Extension – *PE2061 ONLY*

Where Used: S7F4, F18

ACKC10

Format: 10
Description: Acknowledge Code, 1 byte
0 = Accepted for display
1 = Message will not be displayed
2 = Terminal not available
3 = Internal error
Where Used: S10F2, F4, F6

ALCD

Format: 10

Description: Alarm code byte
bit 8 =1means alarm set
bit 8 =0means alarm cleared
Where Used: S5F1, F6

ALED

Format: 10
Description: Alarm enable/disable code, 1 byte
bit 8 =1means enable alarm
bit 8 =0means disable alarm
Where Used: S5F3

ALID

Format: 54
Description: Alarm identification.
Where Used: S5F1, F3, F5, F6
Where Used: S5F3

ALTX

Format: 20
Description: Alarm text limited to 40 characters.
Where Used: S5F1, F6

CEED

Format: 11
Description: Collection event or trace enable/disable code, 1 byte
FALSE = Disable
TRUE = Enable
Where Used: S2F37

CEID

Format: 54
Description: Collected event ID.
Where Used: S2F35, F37; S6F11, F15

COMMACK

Format: 10
Description: Establish Communications Acknowledge Code, 1 byte
0 = Accepted
1 = Denied, Try Again
Where Used: S1F14

CPACK

Format: 10
Description: Command Parameter Acknowledge Code, 1 byte
1 = Parameter Name (CPNAME) does not exist
2 = Illegal Value specified for CPVAL. ***This code is never used, see HCACK***
3 = Illegal Format specified for CPVAL
Where Used: S2F42

CPNAME

Format: 20
Description: Command Parameter Name.
Where Used: S2F41, F42

CPVAL

Format: 10, 11, 20, 21, 3(), 5()
Description: Command Parameter Value.
Where Used: S2F41

DATAID

Format: 54
Description: Data ID
Where Used: S2F33, F35, F39; S6F5, F11, F16

DATALENGTH

Format: 54
Description: Total bytes to be sent.
Where Used: S2F39

DRACK

Format: 10
Description: Define Report Acknowledge Code, 1 byte
0 = Accept
1 = Denied. Insufficient space
2 = Denied. Invalid format
3 = Denied. At least one RPTID already defined
4 = Denied. At least VID does not exist
5 = Internal error
Where Used: S2F34

DSPER

Format: 20
Description: Data sample period. DSPER has two allowable formats
Format 1: hhmmss, 6 bytes
Where “hh” is hours, “mm” is minutes, “ss” is seconds’.
Where Used: S2F23

EAC

Format: 10
Description: Equipment acknowledge code, 1 byte
0 = Acknowledge
1 = Denied. At least one constant does not exist
2 = Denied. Busy
3 = Denied. At least one constant out of range
4 = Invalid range
5 = Internal error
6 = Access Denied
Where Used: S2F16

ECDEF

Format: 10, 11, 20, 21, 3(), 4(), 5()
Description: Equipment constant default value.
Where Used: S2F30.

ECID

Format: 54
Description: Equipment Constant ID.
Where Used: S2F13, F15, F29, F30

ECMAX

Format: 10, 11, 20, 21, 3(), 4(), 5()
Description: Equipment constant maximum value.
Where Used: S2F30

ECMIN

Format: 10, 11, 20, 21, 3(), 4(), 5()
Description: Equipment constant minimum value.
Where Used: S2F30

ECNAME

Format: 20
Description: Equipment constant name.
Where Used: S2F30

ECV

Format: 10, 11, 20, 21, 3(), 4(), 5()
Description: Equipment Constant Value.
Where Used: S2F14, F15

ERACK

Format: 10
Description: Enable/Disable Event Report Acknowledge Code, 1 byte
0 = Accepted
1 = Denied. At least one CEID does not exist
2 = Internal error
Where Used: S2F38.

GRANT

Format: 10
Description: Grant code, 1 byte
0 = Permission Granted
1 = Busy, Try Again
2 = No Space Available
3 = Duplicate DATAID
Where Used: S2F40

HCACK

Format: 10
Description: Host Command Parameter Acknowledge Code, 1 byte
0 = Acknowledge, command has been performed
1 = Command does not exist
2 = Cannot perform now (the reactor is in LOCAL status)
3 = At least one parameter is invalid
4 = Acknowledge, command will be performed with completion signaled later by an event
5 = Execution error (the reactor cannot perform the command)
6 = Parameters number error
7 = Internal error
54 = process program name not existing
55 = belljar ID out of range (ONLY PE2061S)
56 = Parameter missing
57 = Parameter out of range
58 = Parameter not acceptable (reactor configuration does not allow this parameter)
Where Used: S2F42

LENGTH

Format: 54
Description: Length of the service program or process program in bytes.
Where Used: S7F1

LRACK

Format: 10
Description: Link Report Acknowledge Code, 1 byte
0 = Accepted
1 = Denied. Insufficient space
2 = Denied. Invalid format
3 = Denied. At least one CEID link already defined
4 = Denied. At least one CEID does not exist
5 = Denied. At least one RPTID does not exist
6 = Internal error
Where Used: S2F36

MDLN

Format: 20
Description: Equipment Model Type, 6 bytes max
Same data as returned by S1,F2
Where Used: S1F2, F13, F14

MHEAD

Format: 10

Description: SECS message block header associated with message block in error
Where Used: S9F1, F3, F5, F7

OFLACK

Format: 10
Description: Acknowledge code for OFF-LINE request.
0 = OFF-LINE Acknowledge
Where Used: S1F16

ONLACK

Format: 10
Description: Acknowledge code for ON-LINE request.
0 = ON-LINE Accepted
1 = ON-LINE Not Allowed
2 = Equipment Already ON-LINE
Where Used: S1F18

PPBODY

Format: 20
Description: Process program body The process program describes to the Equipment, in its own language, the actions to be taken in processing the material it receives.
Where Used: S7F3, F6

PPGNT

Format: 10
Description: Process program grant status, 1 byte
0 = OK
1 = Already have
2 = No space
3 = Invalid PPID (i.e. wrong extension, wrong name, etc)
4 = Busy, try later
5 = Will not accept
6 = Internal error
7 = Bell Unknown – *2061 Only*
8 = Recipe Invalid Extension – *2061 Only*

Where Used: S7F2

PPID

Format: 20
Description: Process program ID. Limited to a maximum of 80 bytes.

Where Used: S7F1, F3, F5, F6, F17, F20

RCMD

Format: 20
Description: Remote command string.
Where Used: S2F41

RPTID

Format: 54
Description: Report ID.
Where Used: S2F33, F35; S6F11, F16, F19

RSDA

Format: 10
Description: Request Spool Data Acknowledge
0 =OK
1 = Denied, busy try later
2 = Denied, spooled data does not exist
Where Used: S6F24

RSDC

Format: 51
Description: Request Spool Data Code
0 = Transmit Spooled Messages
1 = Purge Spooled Messages
Where Used: S6F23

SHEAD

Format: 10
Description: Stored header related to the transaction timer.
Where Used: S9F9

SOFTREV

Format: 20
Description: Software revision code 6 bytes maximum.
Where Used: S1F2, F13, F14

SV

Format: 0, 10, 11, 20, 21, 3(), 4(), 5()
Description: Status variable value.
Where Used: S1F4

SVID

Format: 20, 3(), 5()
Description: Status variable ID. Status variables may include any parameter that can be sampled in time such as temperature or quantity of a consumable.
Where Used: S1F3, F11, F12

SVNAME

Format: 20
Description: Status Variable Name.
Where Used: S1F12

TIACK

Format: 10
Description: Time Acknowledge Code, 1 byte
    0 =OK
    1 = Error, not done
Where Used: S2F32

TID

Format: 10
Terminal number, 1 byte
    0 = Single or main terminal
    >0 = Additional terminals at the same Equipment
Where Used: S10F1, F3, F5

TIME

Format: 20
Description: Time of day, 16 bytes. The format is YYYYMMDDhhmmsscc
YYYY=Year 0000 to 9999
MM=Month 01 to 12
DD=Day 01 to 31
hh=Hour 00 to 23
mm=Minute 00 to 59
ss=Second 00 to 59
cc=Centisecond 00 to 99
Where Used: S2F18, F31.

V

Format: 0, 10, 11, 20, 21, 3(), 4(), 5()
Description: Variable data.
Where Used: S6F11, F16, F20

VID

Format: 54
Description: Variable ID.
Where Used: S2F33

SCENARIOS

Spooling Scenario

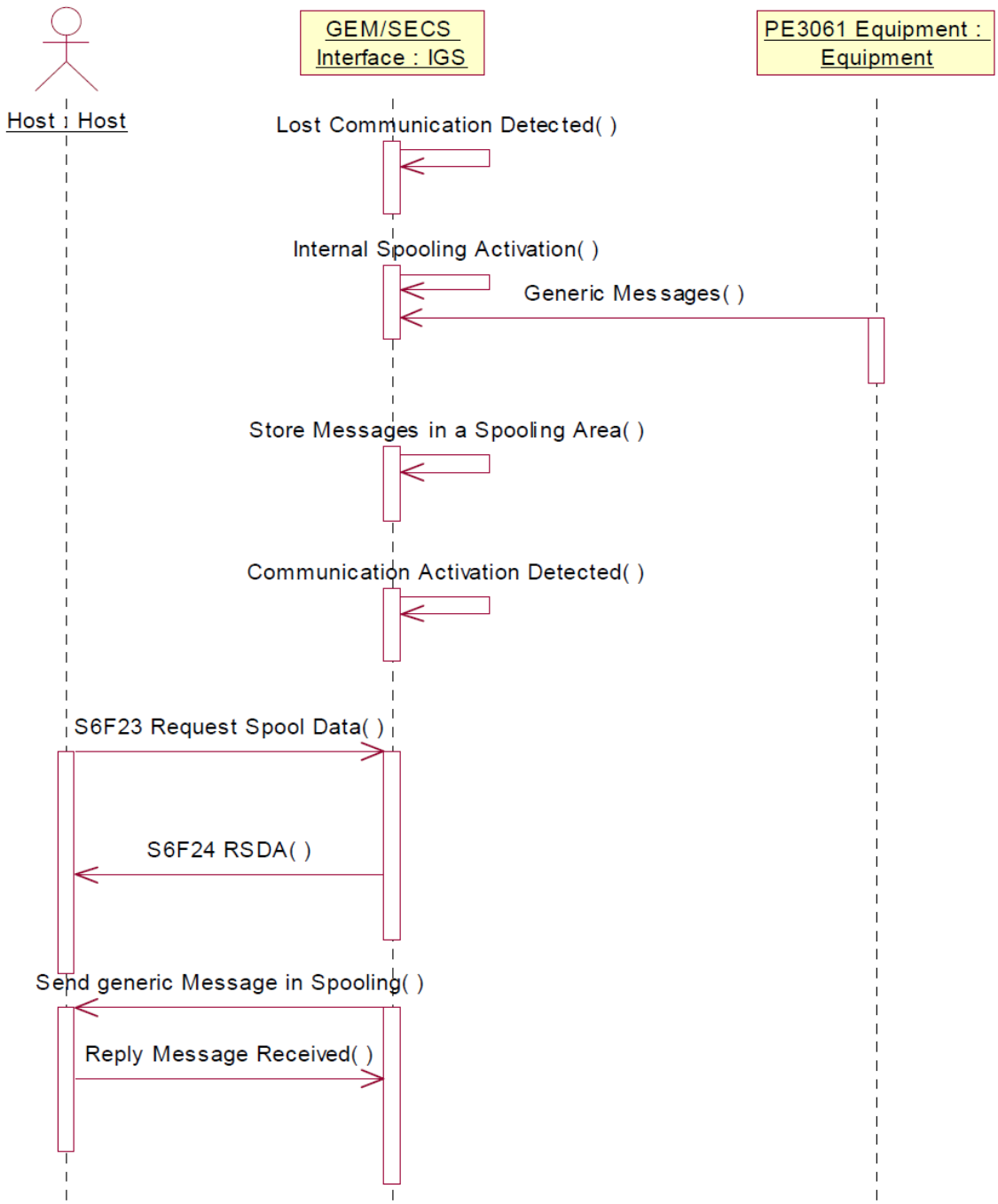

Terminal Services Scenario

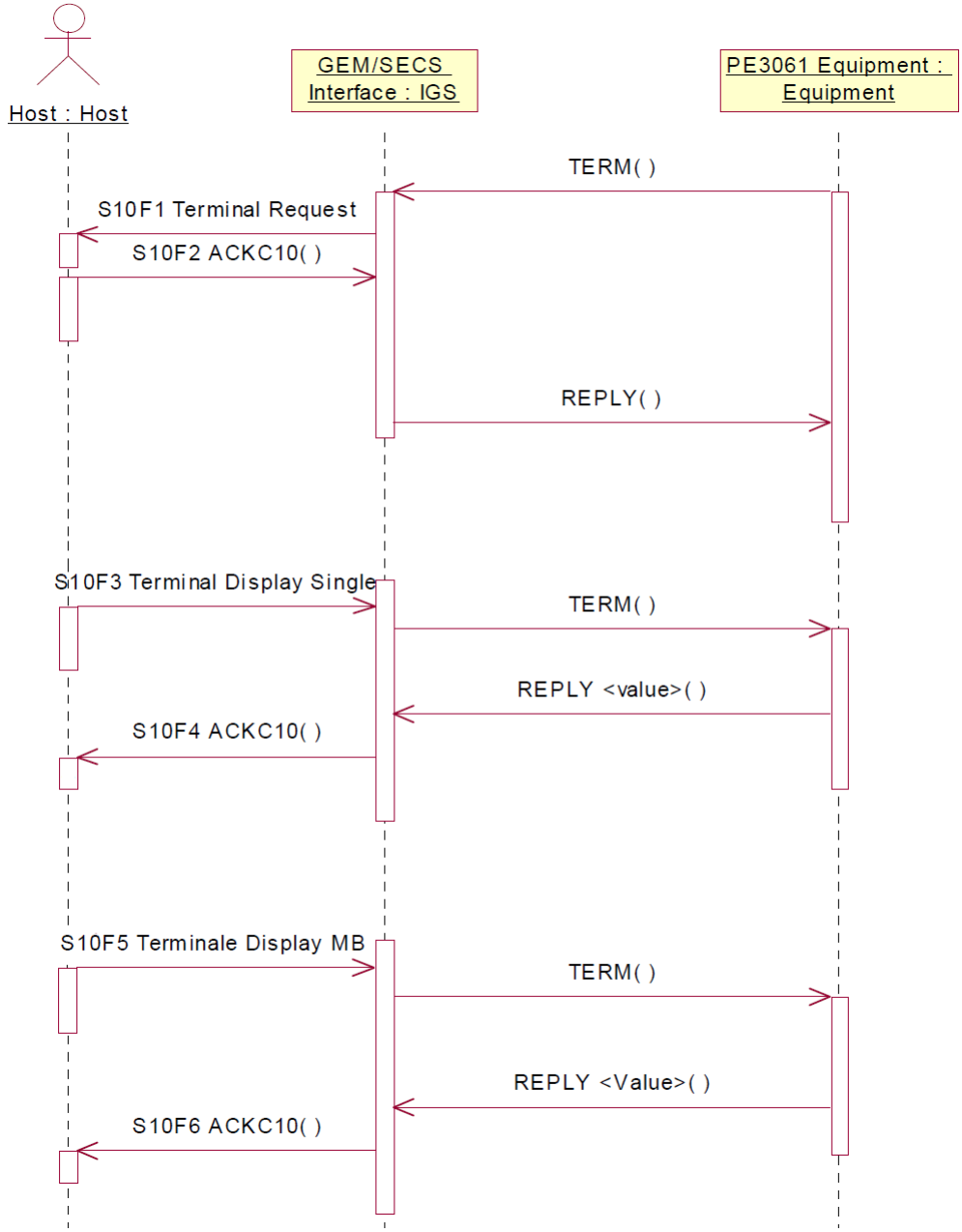

Variable Data Collection Scenario

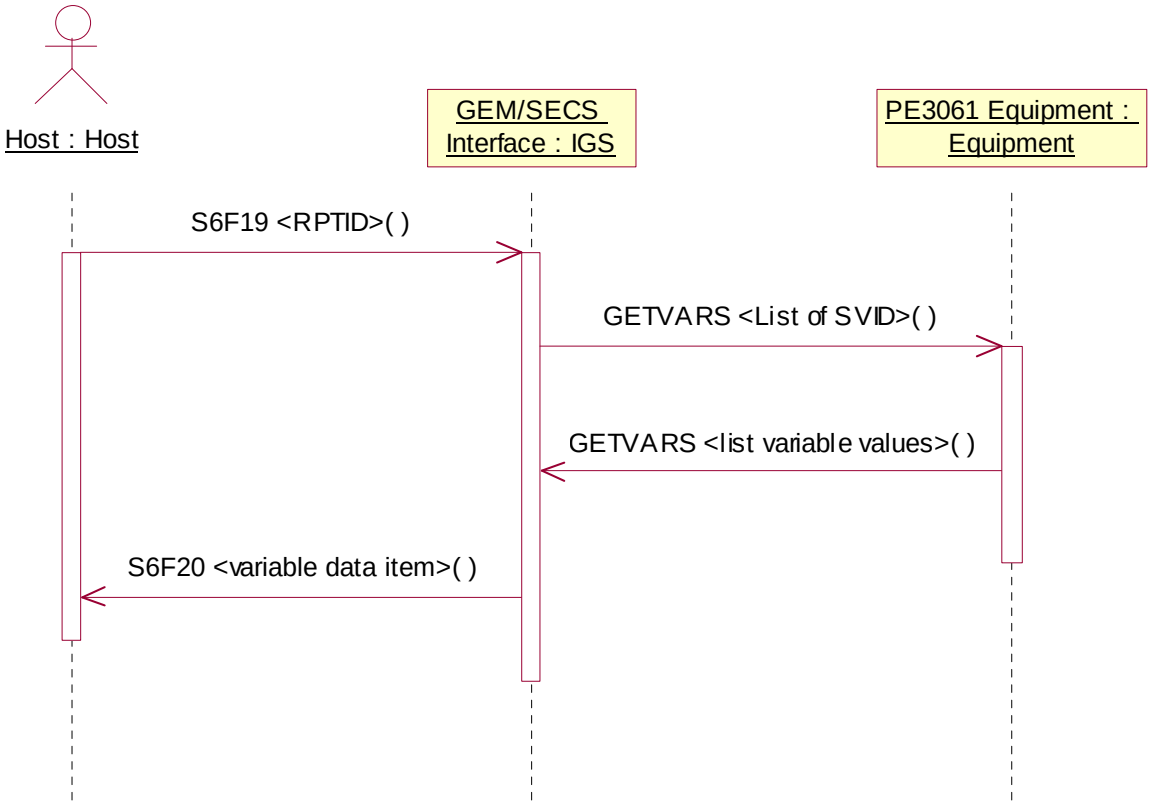

Status Data Collection Scenario

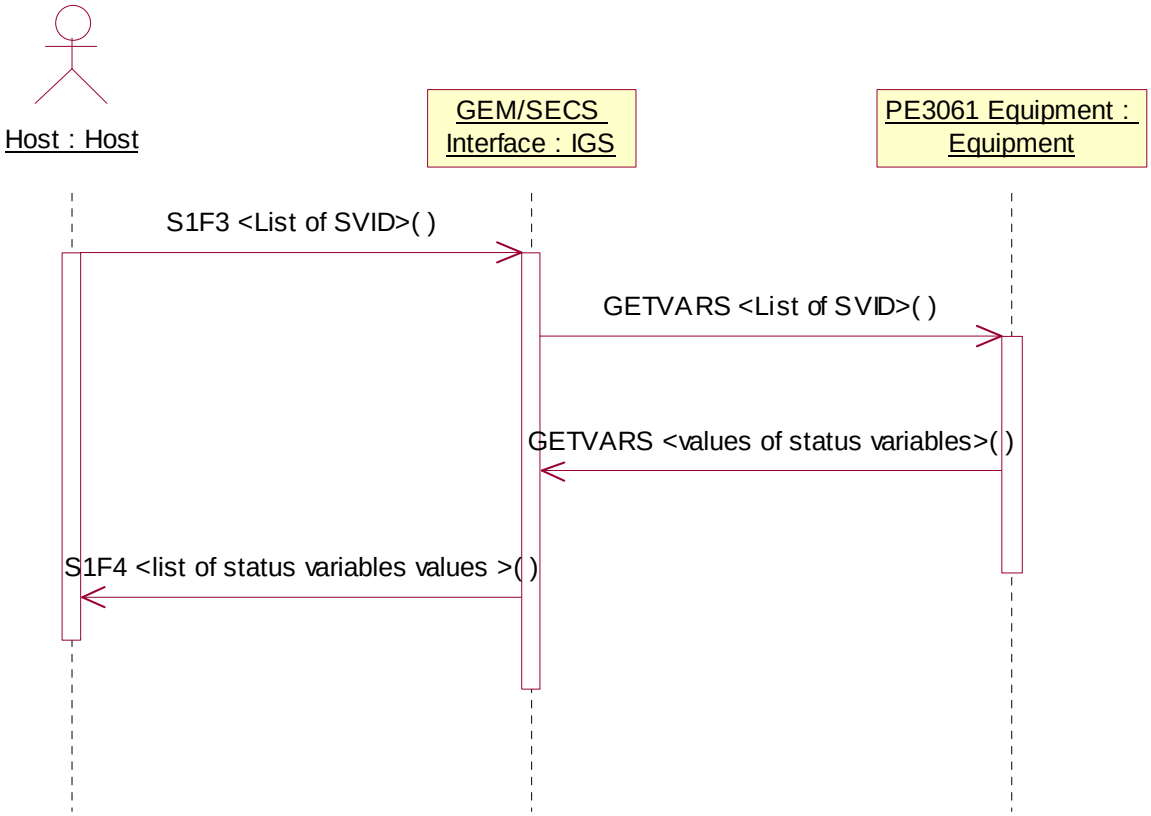

Enable Event Reporting Scenario

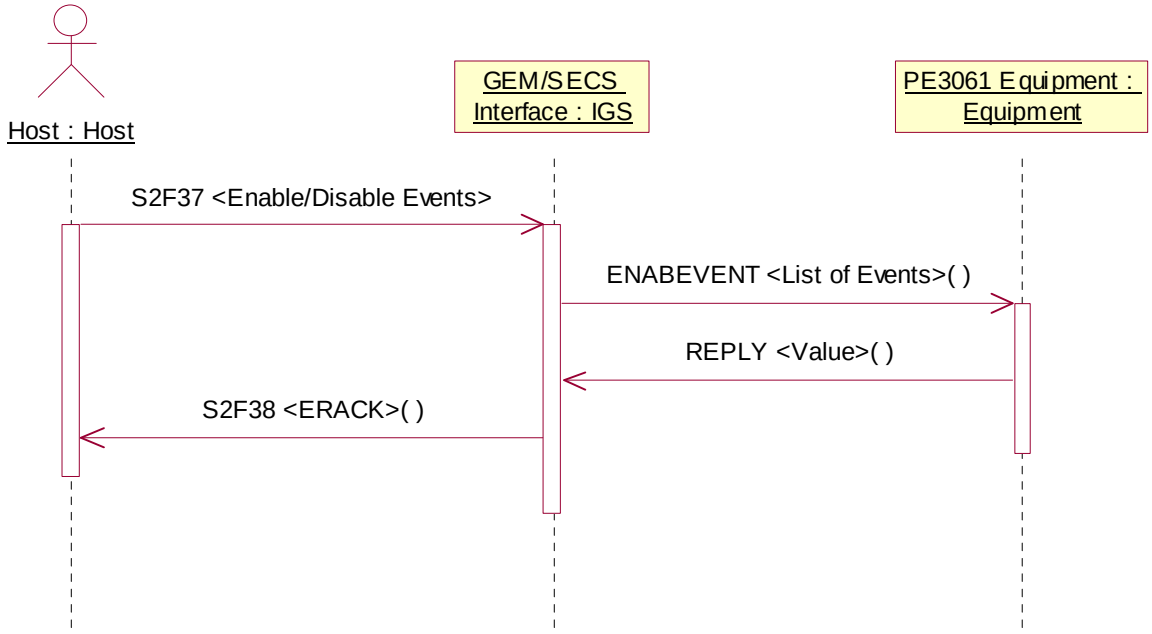

Equipment Reports Event Scenario

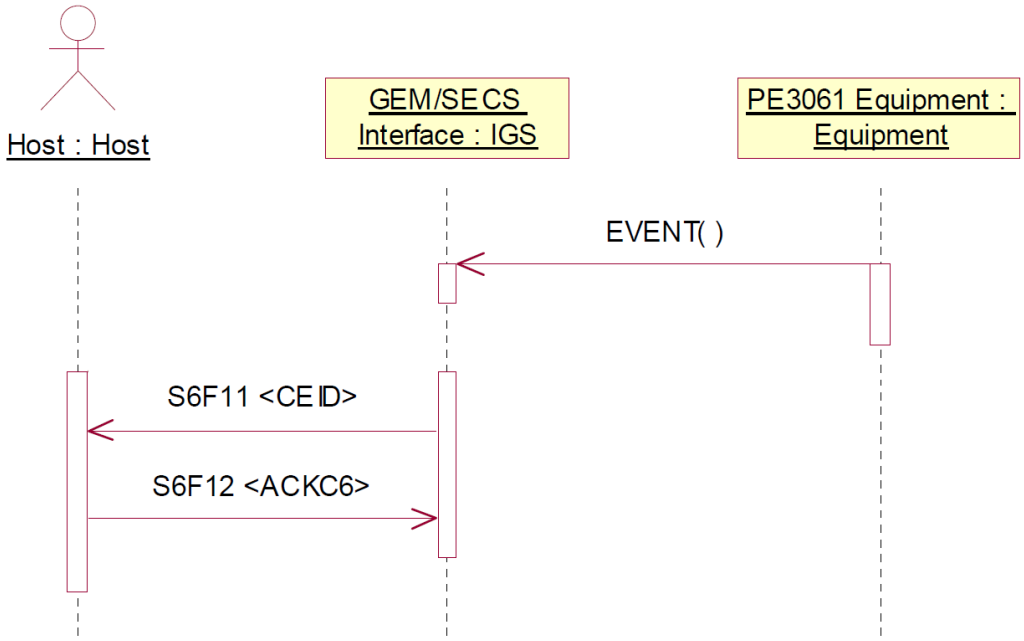

Dynamic Event Report Configuration Scenario

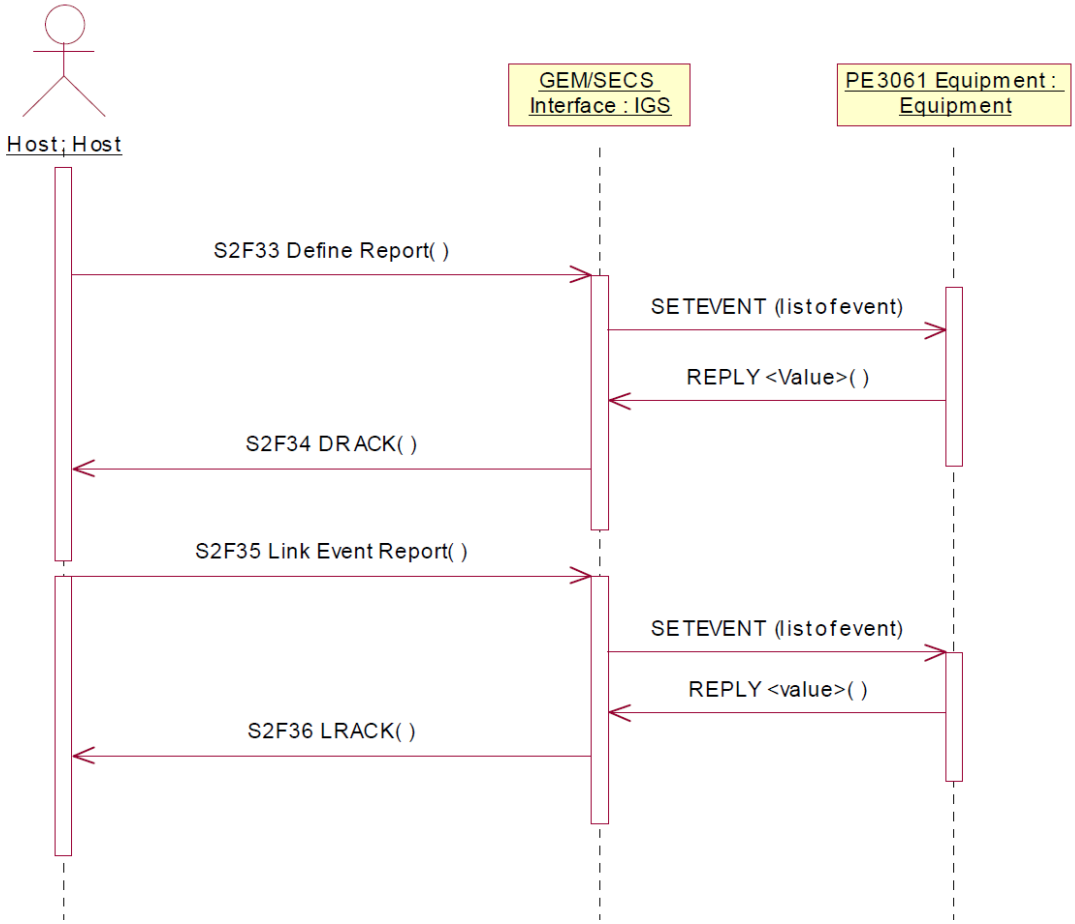

Host Requests Event Report Scenario

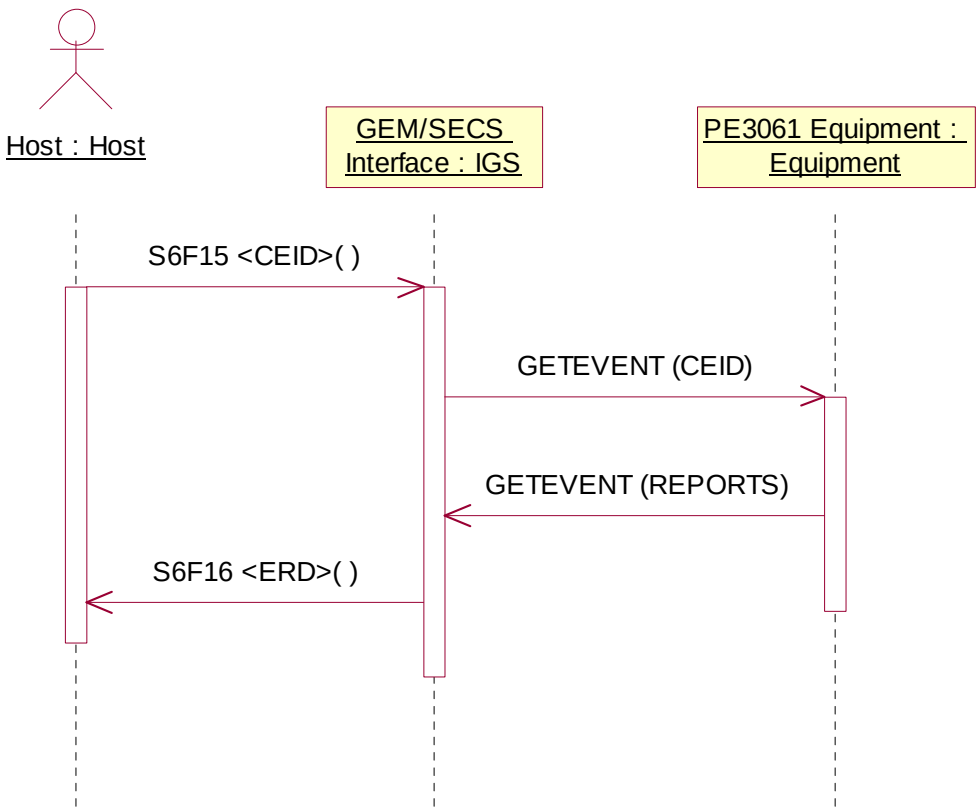

Host Sends Equipment Constants Scenario

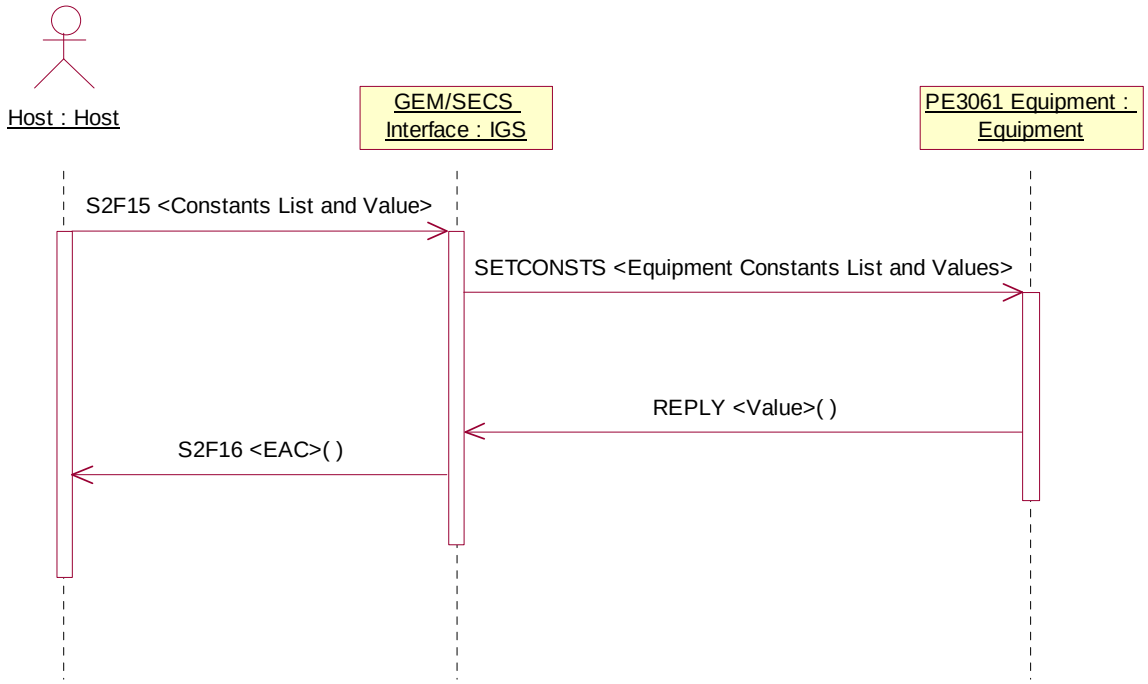

Operator Changes Equipment Constants Scenario

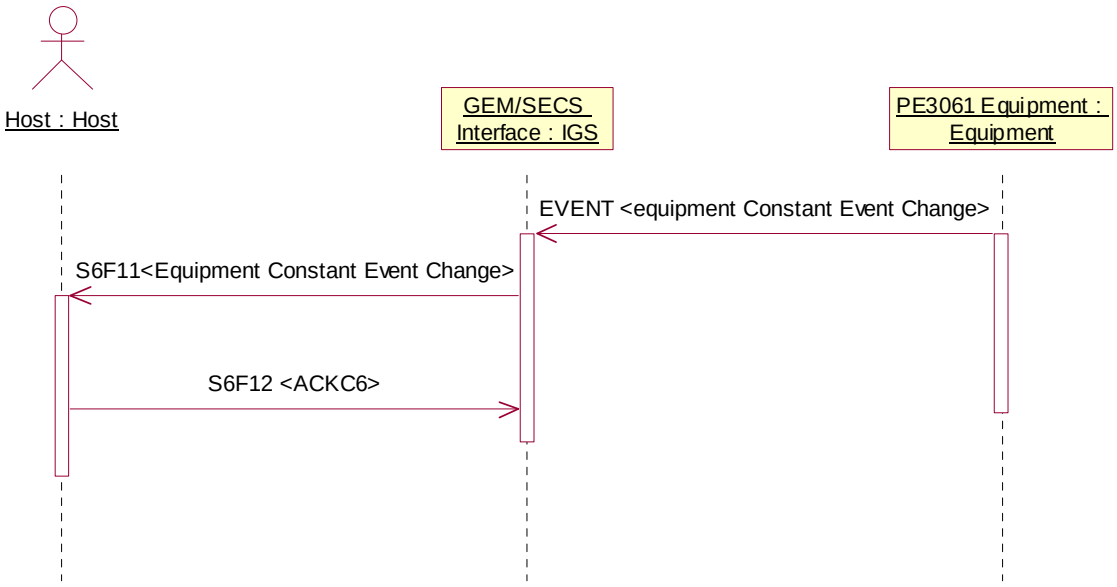

Establish Communication Scenario

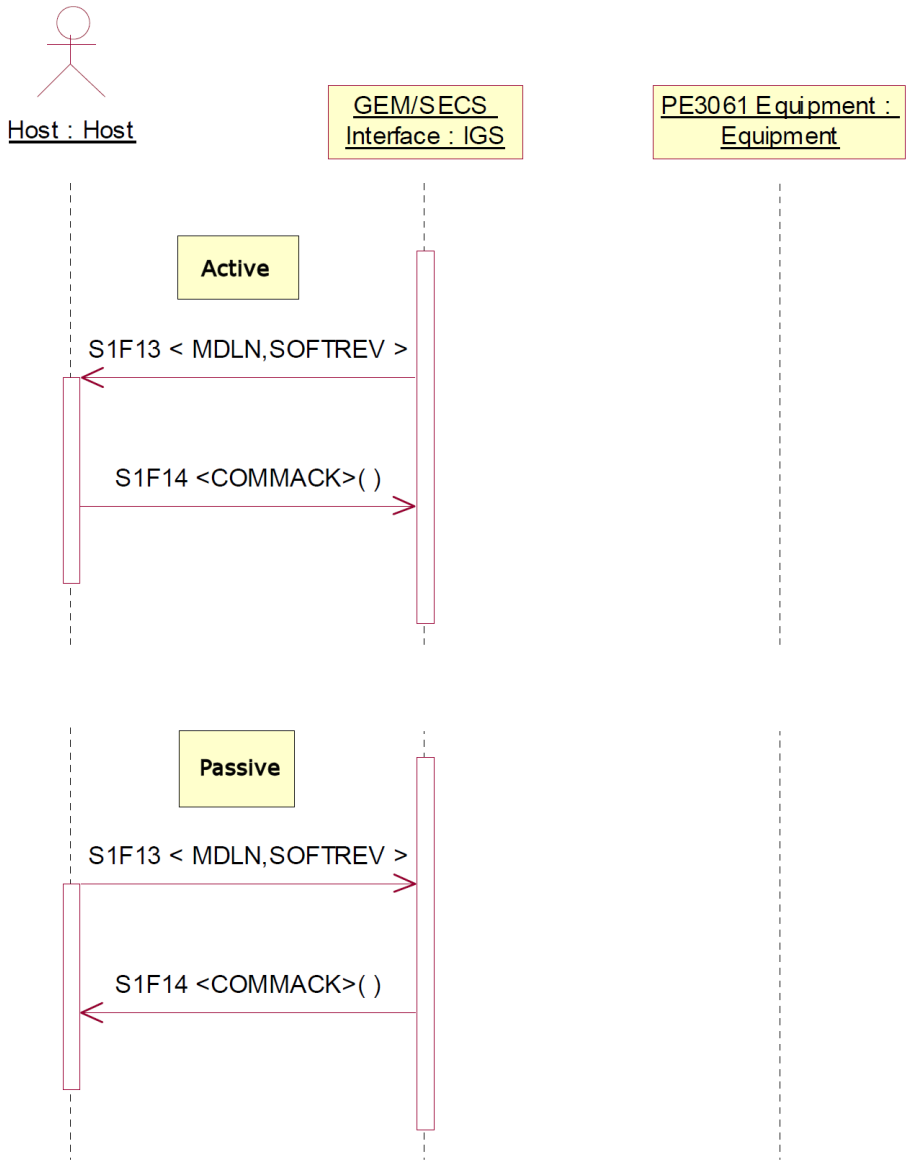

On-Line Identification Scenario

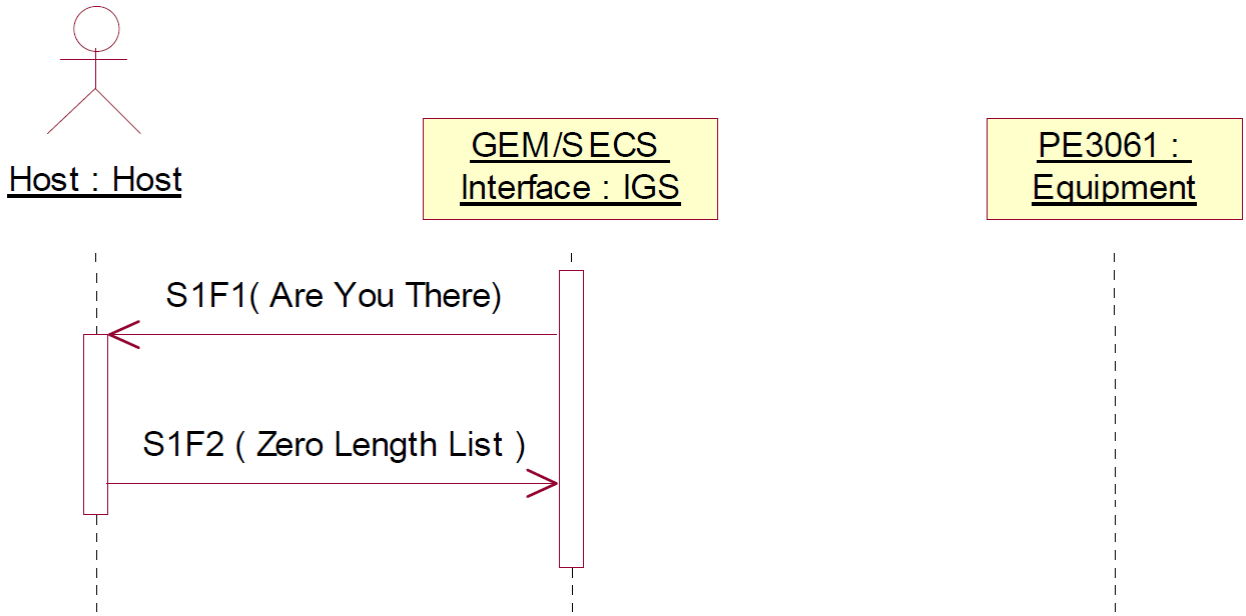

Process Program Request Scenario

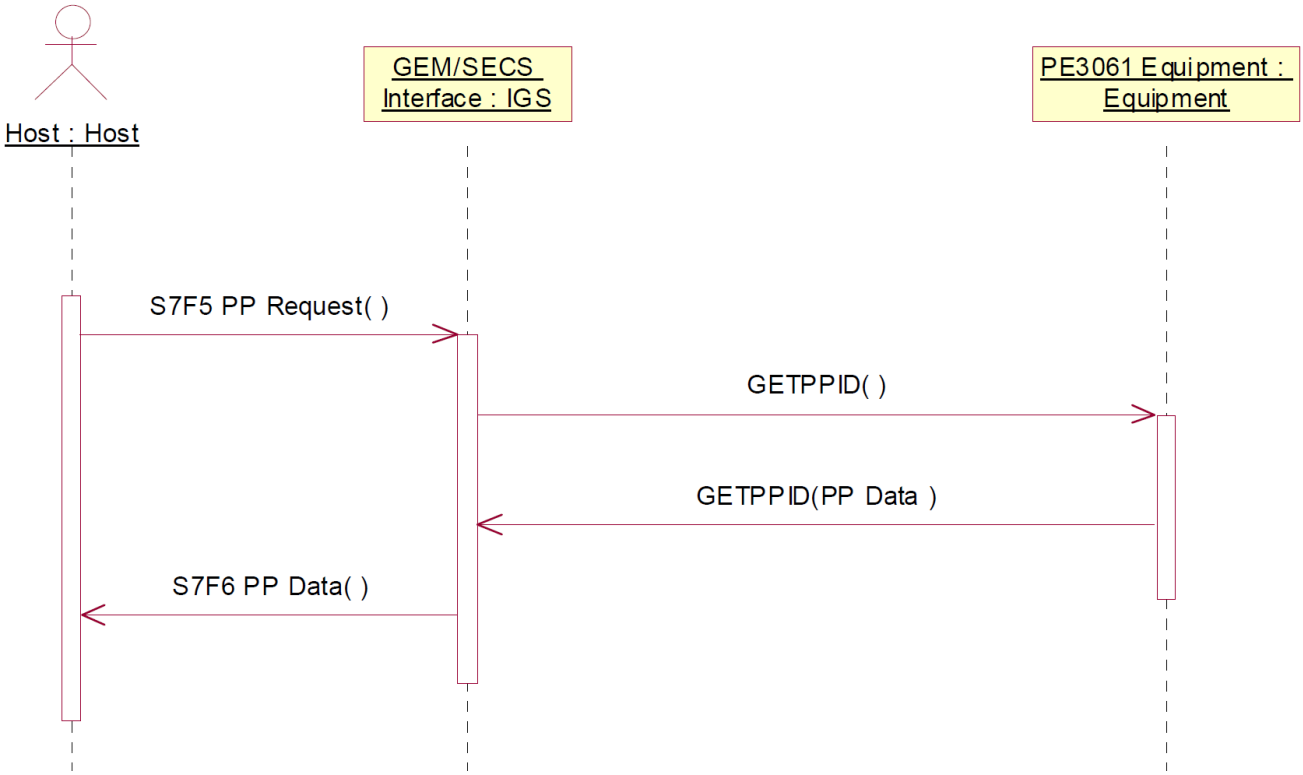

Process Program Send Scenario

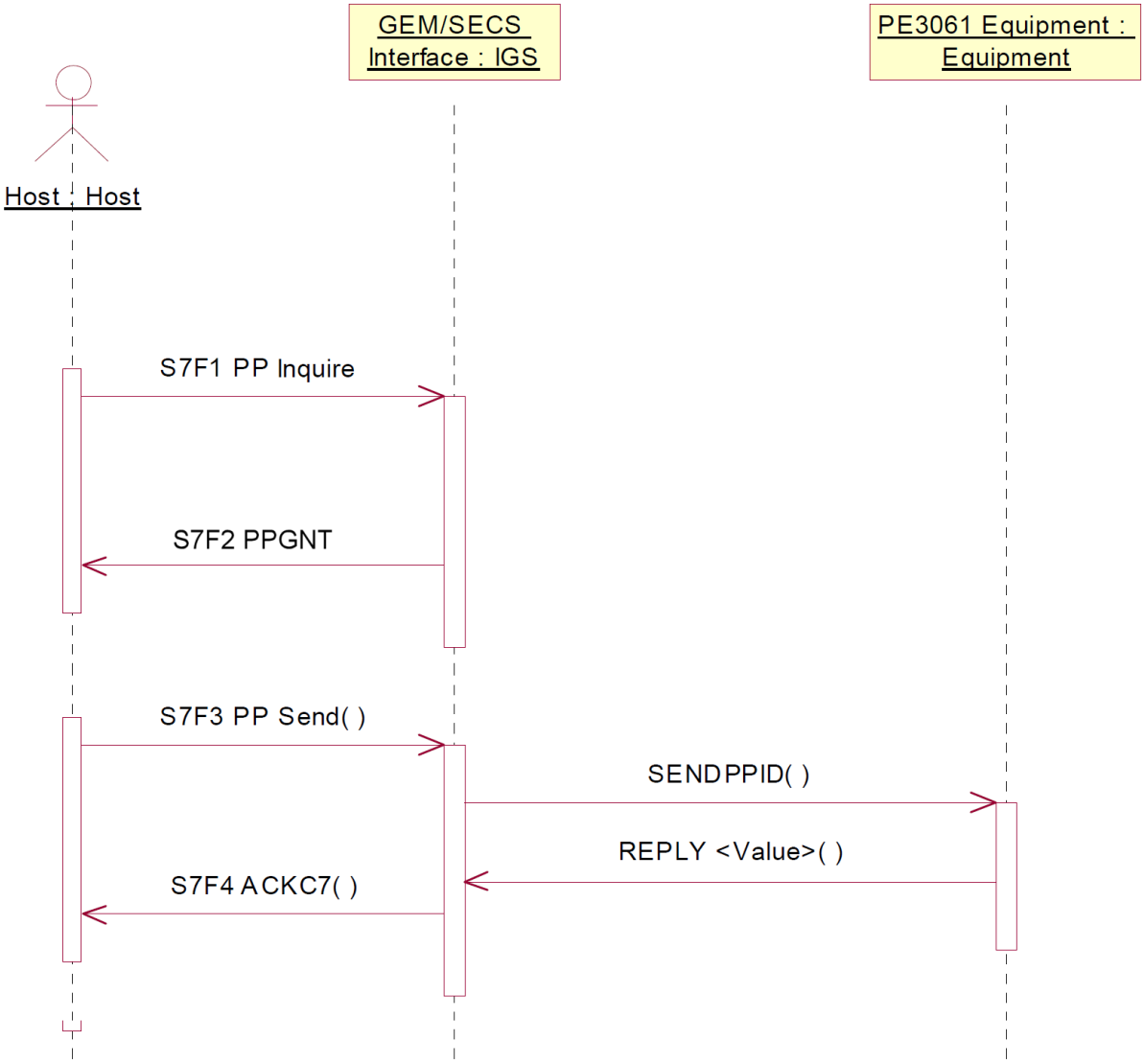

WARNING! Be very careful if you intend to modify recipes on Host side. The equipment will recognize and refuse recipes containing syntactic errors, but will not grant the accuracy of the data for the intended purpose of the recipe. I.e. if a deposition time should be 100 seconds, and the recipe is wrongly edited to 10, or if during the data transmission a byte is lost and and the resulting number is not correct, the equipment will accept the recipe as valid. The data accuracy of the recipe is totally demanded to the Customer.

Process Program Delete Scenario

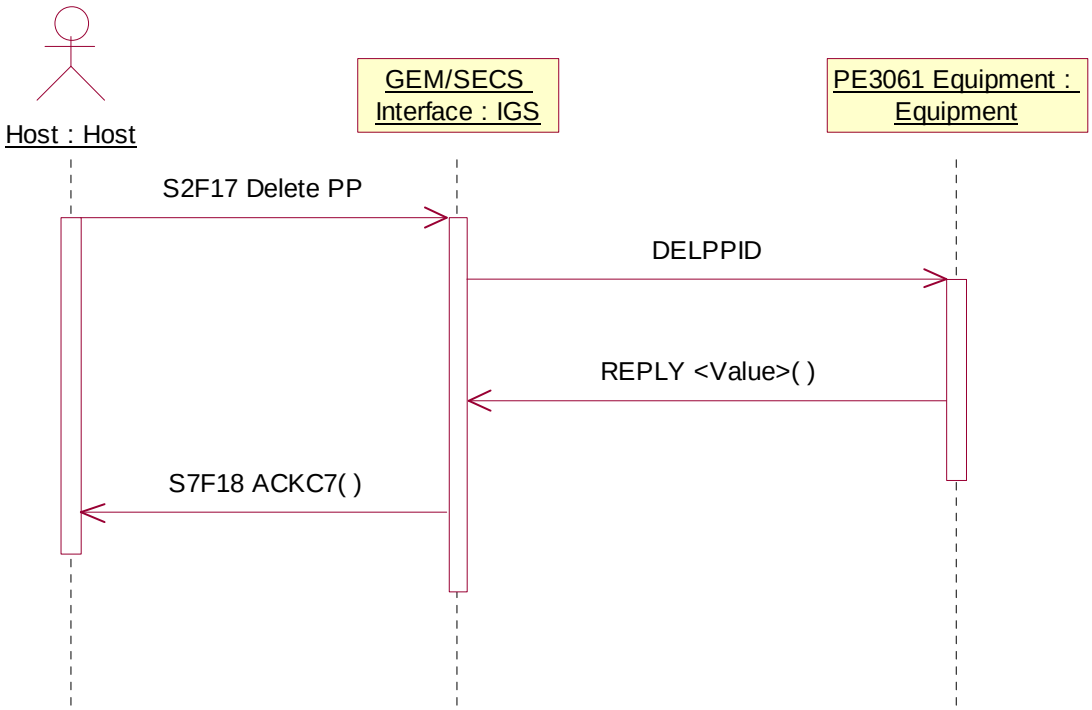

Current EPPD Request Scenario

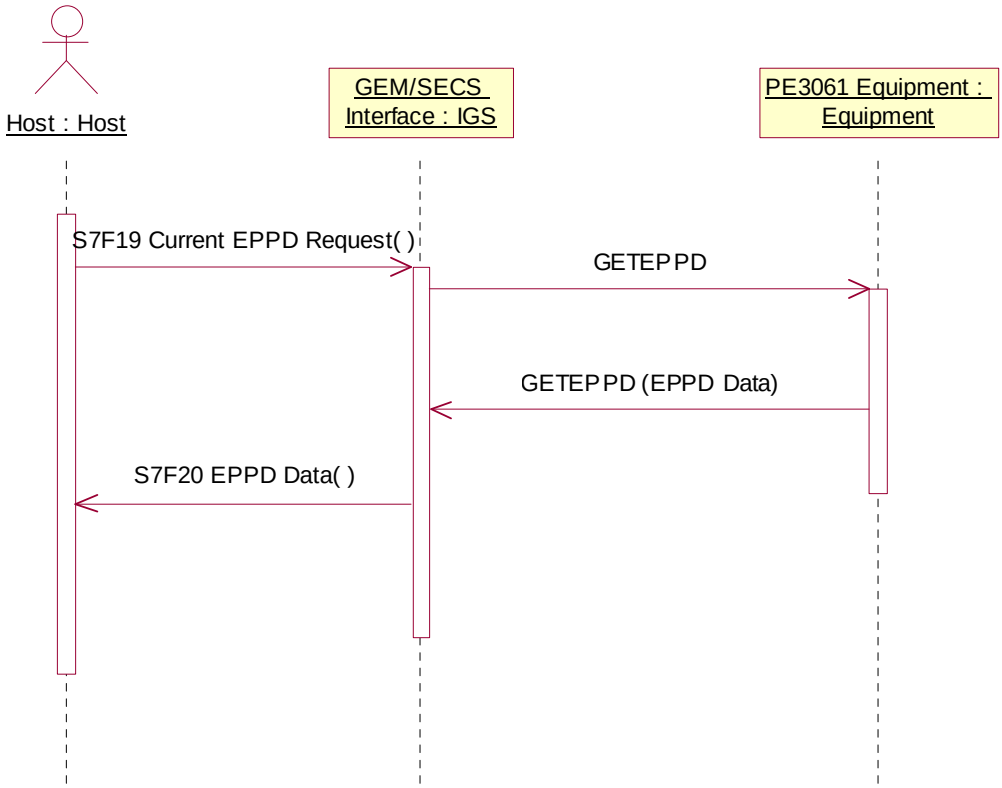

Enable/Disable Alarms Scenario

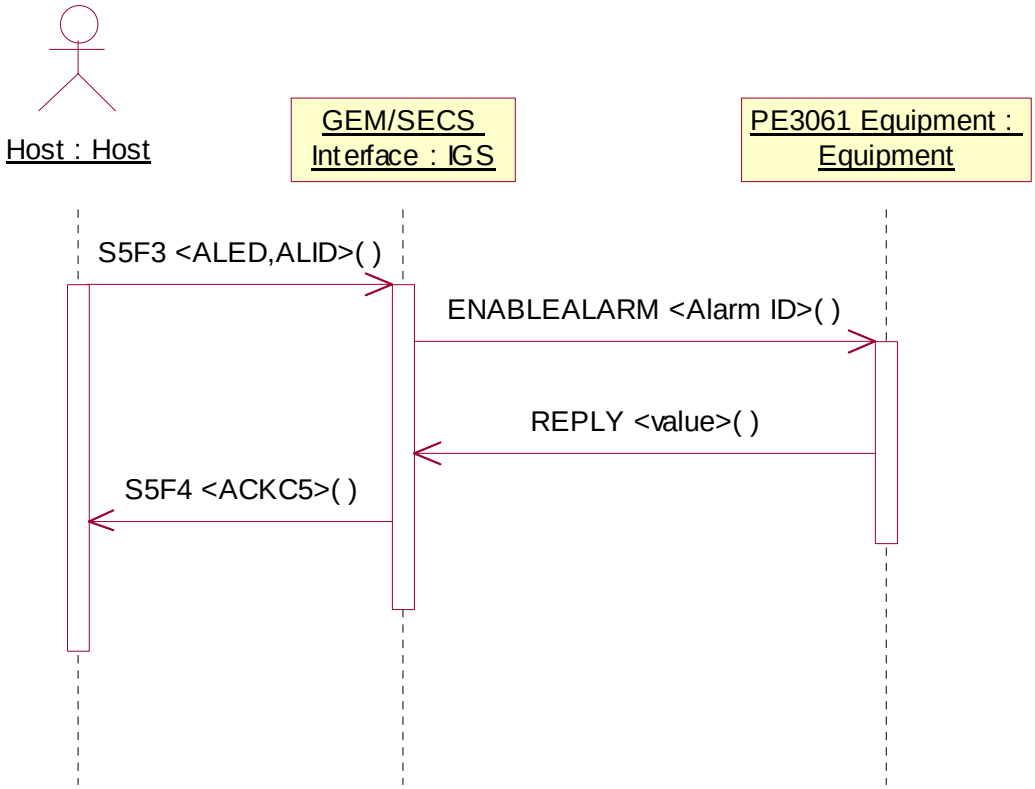

Host Requests Alarm List Scenario

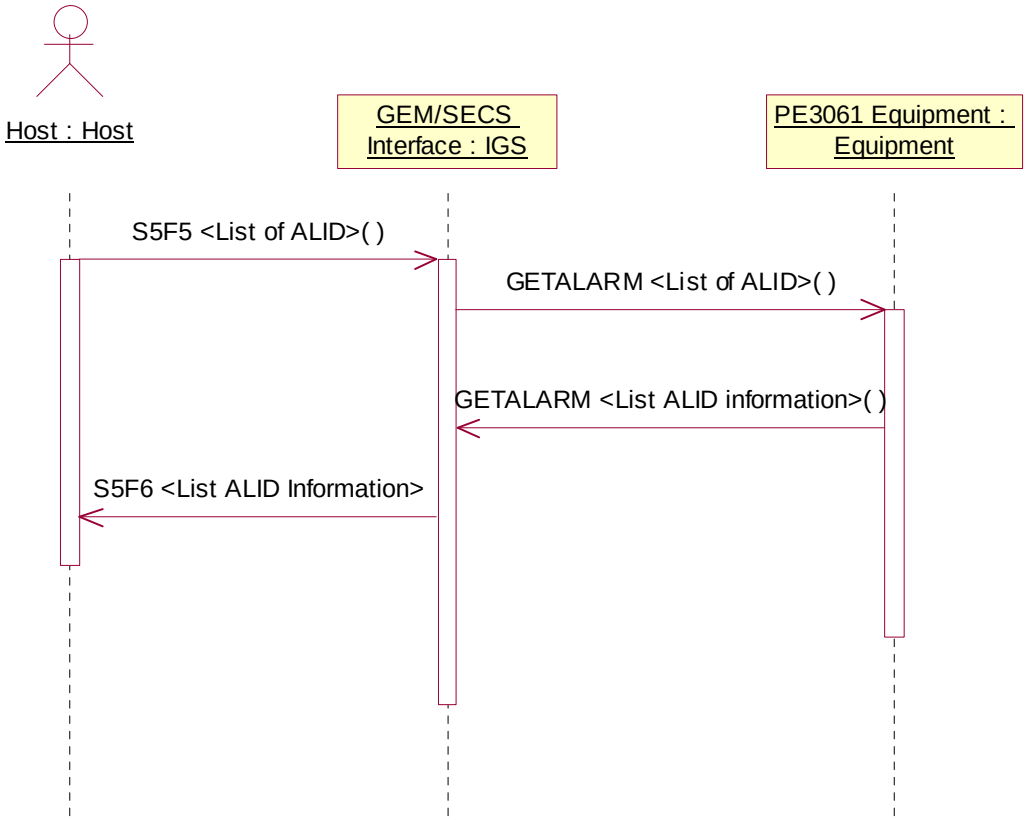

Alarm/Event Reporting Scenario

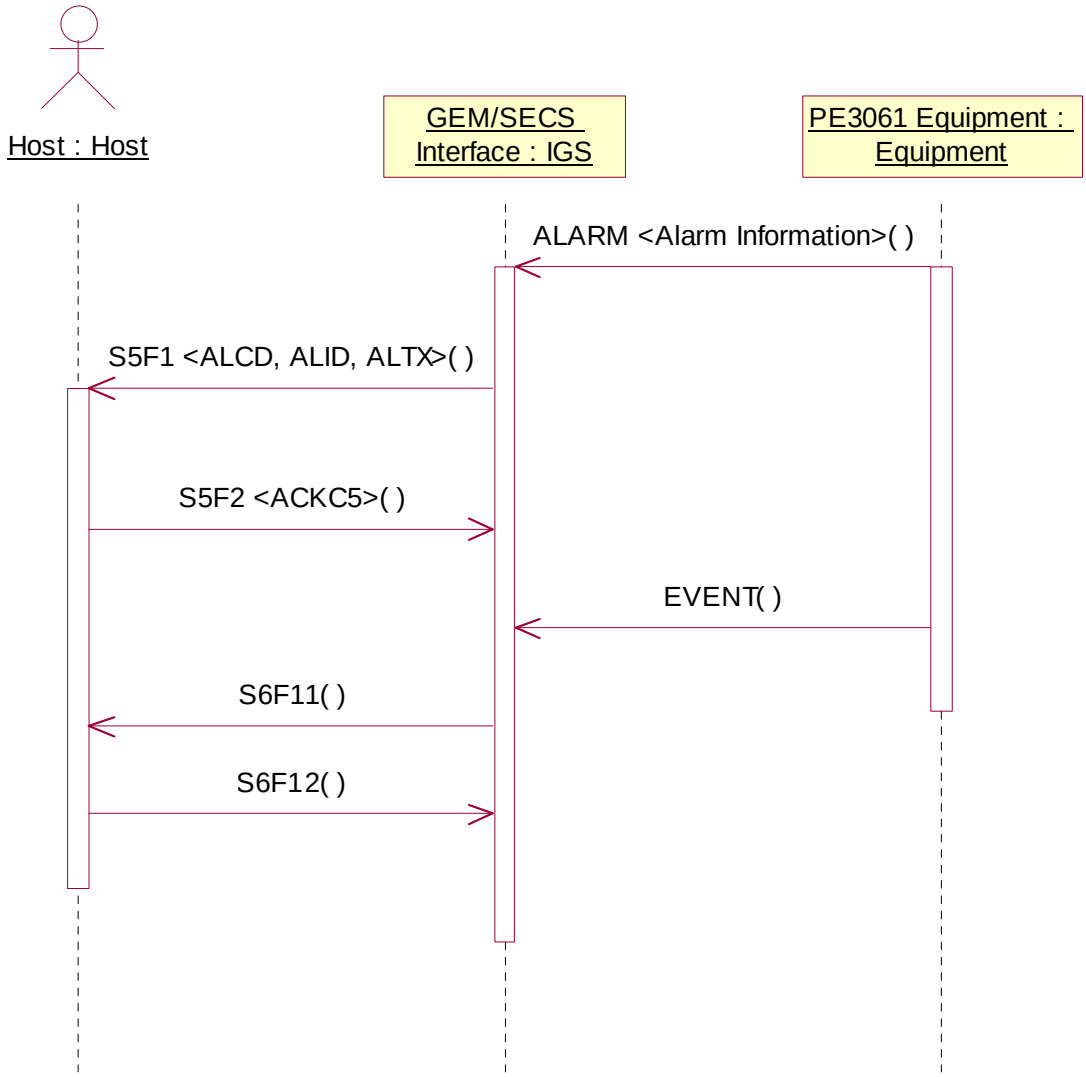

Remote Control Scenario

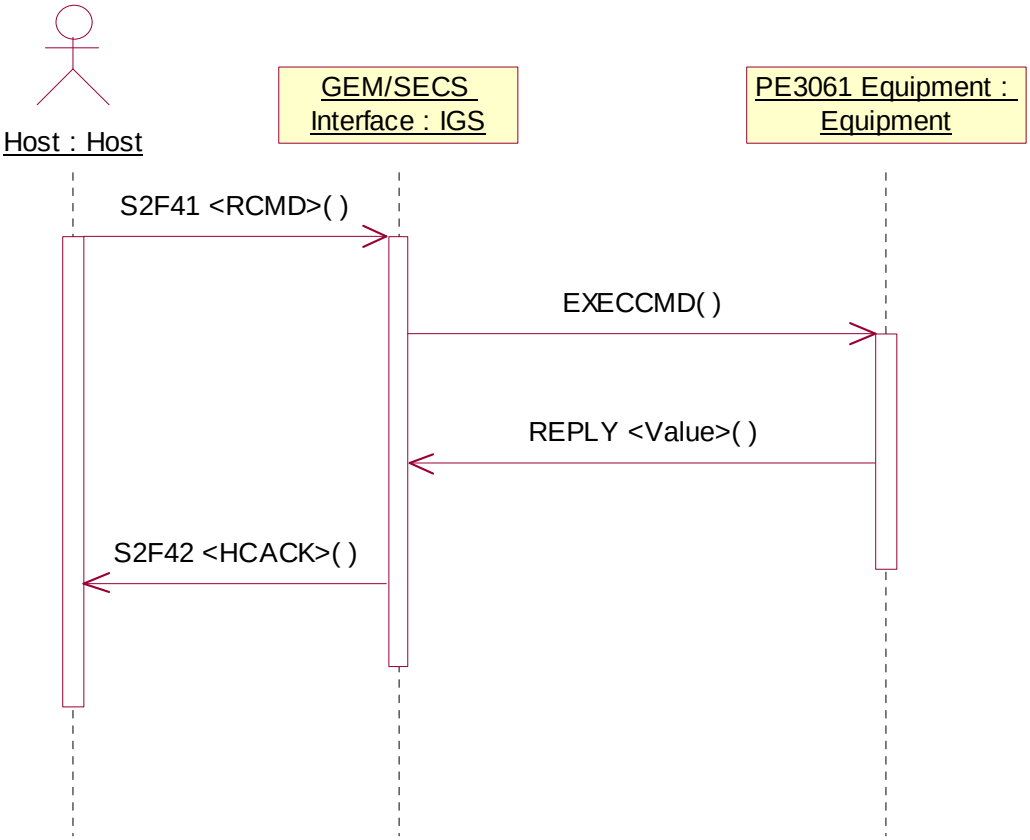

MESSAGES SUMMARY

SML Notation

Items are shown using "SECS Message Language" (SML) notation. SML is a general notation developed by GW Associates for describing SECS messages. SML is similar to the notation used in the SECS Standards documents, but SML is a more precise and regular notation. In SML, the format for a data item is as follows:

< **type** [**count**] **value** >

The components are:

< > Angle Brackets. Each Data Item is enclosed within angle brackets ("less than," "greater than").
This notation implies that each Data Item has a Data Item Length as required by SECS-II.

type Any of the data item types:

- A (ASCII, value/values will be enclosed in quotes)
- B (Unspecified Binary, value/values will be exadecimal)
- J (JIS-8)
- I1 (One-byte Signed Integer)
- I2
- I4
- I8
- U1 (one-Byte Unsigned Integer)
- U2
- U4
- U8
- F4 (Four-byte Floating Point)
- F8
- BOOLEAN
- L (List, value/values will be other items)

count Count of the element values that make up the item. If present, the count is enclosed within square brackets "[ ]." The count may be omitted, in which case the square brackets are also omitted: in this case, the length of the Data Item is implied by the value which follows.

The "count" number specifies the number of value elements in Data Item Value. For String formats (ASCII, Binary,JIS-8), "count" specifies the number of characters in the string. For Numeric formats (I1, I2, I4, U1, U2, U4, U8, F4, F8, BOOLEAN), "count" specifies the number of values in the array. For simple scalar numeric values, "count" is usually "1" For LIST items, "count" specifies the number of items in the list.

"count" can be omitted.

value Value of a single item element. Values are shown in a notation that depends on item type. For example, ASCII values are shown as characters enclosed in quotes, and Unspecified Binary values are shown in hexadecimal.

... Ellipsis (...) is used to indicate that additional items may occur, as for example where substructures may repeat in a List structure.

As an example, a two-byte unsigned integer Data Item with an array of three values 21, 22, and 23 is represented as:

<U2 [3] 21 22 23>

Numeric values shown are considered decimal integers unless otherwise indicated. Negative values are shown with a leading minus sign '-'
Hexadecimal values are shown in C-Language convention, with a leading "0x"

- 10 Decimal Ten
- 0x10 Hexadecimal 10
- -10 Decimal Negative Ten

Where a value is not fixed, the SECS variable name is used directly. For example:

<A [6] SOFTREV>

For example, the S1F3 message might be described in SML, as follows:

```
S1F3 W
      <L
            <U4 13>
            <U4 7>
      > .
```

Manual Notation

- Text preceeded by '//' is to be considered as a comment. Comments MUST NOT be considered part of SECS message, and are present in this manual only for a better description.
- **H** ⇒ **E** means that the direction of transmission is from Host to PE3061 Equipment
- **H** ⇐ **E** means that the direction of transmission is from PE3061 Equipment to Host
- **H** ⇔ **E** means that the direction of transmission is both from PE3061 Equipment to Host and from Host to PE3061 Equipment

S1,F1 Are You There Request

Description: The Host/Equipment may send this message to the Equipment/Host verifying if it is alive.
Structure:

S1F1 W. // Direction of transmission: H ⇔ E

S1,F2 On Line Data

Description: Data signifying that the Equipment/Host is alive.
Structure:

S1F2 // Direction of transmission: H ⇔ E

```
<L
        <A [6] MDLN>        // Model Number
        <A [6] SOFTREV>     // Software Revision
>.
```

S1F2 // Direction of transmission: H ⇔ E

```
< L >.
```

S1,F3 Selected Equipment Status Request

Description: A request to the Equipment to report selected values of its status.
Structure:

```
S1F3 W                          // Direction of transmission: H ⇒ E
    <L
        <U4 SVID>               // Status Variable ID
        ...
    >.
```

If S1F3 contains a zero-length list, then the Equipment will report all variables of type SV, in alphabetic order by SVID.

S1,F4 Selected Equipment Status Data

Description: The Equipment reports the value of each SVID requested in the order requested.
Structure:

```
S1F4                            // Direction of transmission: H ⇐ E
    <L
        <V>                     // Status Variable Value
        ...
    >.
```

A zero-length list item for V means that the corresponding SVID does not exist.

S1,F11 Status Variable Namelist Request

Description: A request to the Equipment to identify certain status variables.
Structure:

S1F11 W // Direction of transmission: H ⇒ E

```
<L
        <U4 SVID>
        …
>.
```

A zero length means report all SVIDs in alphabetic order by SVID.

S1,F12 Status Variable Namelist Reply

Description: The Equipment reports to the Host the name and units of the requested SVs.
Structure:

S1F12 // Direction of transmission: H ⇐ E

```
<L
        <L
                <U4 SVID>
                <A[n] SVNAME>
                <A[n] UNITS>
        >
        …
>.
```

Zero-length ASCII items for both SVNAME and UNITS indicates that the corresponding SVID does not exist.

S1,F13 Establish Communications Request

Description: The purpose of this message is to provide a formal means of initializing communications at a logical application level both on power-up and following a break in communications.
Structure:

- The *Equipment* sends this message using the following format.

```
S1F13 W                                  // Direction of transmission: H ⇐ E
        <L
                <A[6] MDLN>
                <A[6] SOFTREV>
        >.
```

- The *Host* sends this message using the following format.

```
S1F13 W                                  // Direction of transmission: H ⇒ E
        <L>.
```

S1,F14 Establish Communications Request Acknowledge

Description: Accept or deny Establish Communications Request (S1,F13). MDLN and SOFTREV are on-line data and are valid only if COMMACK = 0.
Structure:

- The *Equipment* sends this message using the following format.

```
S1F14                                    // Direction of transmission: H ⇐ E
    <L
        <B [1] COMMACK >
        <L
                <A[6] MDLN>
                <A[6] SOFTREV>
        >
    >.
```

- The *Host* sends this message using the following format.

```
S1F14                                    // Direction of transmission: H ⇒ E
    <L
        <B [1] COMMACK >
        <L>
    >.
```

S1,F15 Request OFF-LINE

Description: The Host requests that the Equipment transition to the OFF-LINE state.
Structure:

S1F15 W. // Direction of transmission: H ⇒ E

S1,F16 OFF-LINE Acknowledge

Description: Acknowledge or error.
Structure:

S1F16 // Direction of transmission: H ⇐ E

<B[1] OFLACK>.

S1,F17 Request ON-LINE

Description: The Host requests that the Equipment transition to the ON-LINE state.
Structure:

S1F17 W. // Direction of transmission: H ⇒ E

S1,F18 ON-LINE Acknowledge

Description: Acknowledge or error.
Structure:

S1F18 // Direction of transmission: H ⇐ E
<B[1] ONLACK>.

S2,F13 Equipment Constant Request

Description: The Host requests the ECIDs of interest. Several ECIDs can be specified if desired.
Structure:

```
S2F13 W                                 // Direction of transmission: H ⇒ E
        <L
                <U4 ECID>               // Equipment Constant ID
                ...
        >.
```

A zero-length list means report all ECV's in alphabetic order by ECID.

S2,F14 Equipment Constant Data

Description: The Equipment returns the Equipment Constants in the order requested in S2F13.
Structure:

```
S2F14                                   // Direction of transmission: H ⇐ E
        <L
                <U4 ECV>                // Equipment Constant Value
                ...
        >.
```

A zero-length list item for ECV means that the corresponding ECID does not exist.

S2,F15 New Equipment Constant Send

Description: Change one or more Equipment constants value.
Structure:

```
S2F15 W                                 // Direction of transmission: H ⇒ E
        <L
                <L [2]
                        <U4 ECID>       // Equipment Constant ID
                        <U4 ECV>        // Equipment Constant Value
                >
                ...
        >.
```

S2,F16 New Equipment Constant Acknowledge

Description: Normal completion returns a zero (0) in EAC. If any ECID or ECV in S2F15 is invalid, then EAC contains a non-zero value, and the Equipment rejects the entire S2F15.
Structure:

```
S2F16                                   // Direction of transmission: H ⇐ E
        <B [1] EAC>.                    // Equipment Acknowledge Code
```

S2,F17 Date and Time Request

Description: The Host may send this message at any time to determine the Date and Time base which the Equipment is currently using.
Structure: Header only

S2F17 W. // Direction of transmission: H ⇒ E

S2,F18 Date and Time Data

Description: Actual date and time data.
Structure:
S2F18 // Direction of transmission: H ⇐ E
<A[n] TIME>.

S2,F29 Equipment Constant Namelist Request

Description: This function allows the Host to retrieve basic information about what Equipment constants are available in the Equipment.
Structure:

S2F29 W. // Direction of transmission: H ⇒ E

```
<L
        <U4 ECID >
        …
>.
```

A zero-length list means send information for all ECIDs information in alphabetic order by ECID.

S2,F30 Equipment Constant Namelist

Description: Equipment Constant information response.
Structure:

S2F30 // Direction of transmission: H ⇐ E

```
<L
        <L [6]
                <U4 ECID>
                <A[n] ECNAME>
                <ECMIN>
                <ECMAX>
                <ECDEF>
                <A[n] UNITS>
        >
>.
```

Zero-length ASCII items for ECNAME, ECMIN, ECMAX, ECDEF and UNITS indicates that the corresponding ECID does not exist.

S2,F31 Date and Time Set Request

Description: Synchronize the Equipment time with the Host time base.
Structure:

S2F31 W. // Direction of transmission: H ⇒ E

<A[n] TIME>.

S2,F32 Date and Time Set Acknowledge

Description: Acknowledge the receipt of time and date.
Structure:

S2F32 // Direction of transmission: H ⇐ E

<B[1] TIACK>.

S2,F33 Define Report

Description: The purpose of this message is for the Host to define a group of Reports for the Equipment. The Host specifies one or more Report Ids, and defines which Variables should be included in each report.
If the Equipment already contains existing Report Definitions, then this message can be used to downloaded additional definitions for RPTIDs not yet defined.
If S2,F33 is Multi-block, i.e. if the message length is greater than 244 bytes it must be preceded by the S2,F39/S2,F40 Inquire/Grant transaction, with the **exact** lenght. DATAID must be the same in S2,F39 and S2,F33
The Host cannot download a new Report Definition for a RPTID for which a Report Definition already exists in the Equipment. Instead, to change a Report Definition the Host must first delete the old Report Definition and then send a new Report Definition for that RPTID.
Structure:

```
S2F33 W                                     // Direction of transmission: H ⇒ E
        <L [2]
                <U4 DATAID>                 // DATAID
                <L
                        <L [2]
                                <U4 RPTID>  // Report ID
                                <L
                                        <U4 VID>   // Variable ID
                                        ...
                                >
                        >
                        ...
                >
        >.
```

A list of zero-length following <DATAID> deletes all report definitions and associated links. See S2,F35 (Link Event/Report).
A list of zero-length following <RPTID> deletes report type RPTID.
All CEID links to this RPTID are also deleted.

S2,F34 Define Report Acknowledge

Description: Acknowledge or error. If an error condition is detected the entire message is rejected (i.e., partial changes are not allowed).
Structure:

```
S2F34                               // Direction of transmission: H ⇐ E
        <B [1] DRACK>.              // Acknowledge Code
```

S2,F35 Link Event Report

Description: The purpose of this message is for the Host to link reports to an event (CEID).
If S2,F35 is Multi-block, i.e. if the message length is greater than 244 bytes it must be preceded by the S2,F39/S2,F40 Inquire/Grant transaction, with the **exact** lenght. DATAID must be the same in S2,F39 and S2,F35
Structure:

```
S2F35 W                                     // Direction of transmission: H ⇒ E
        <L [2]
                <U4 DATAID>                 // DATAID
                <L
                        <L [2]
                                <U4 CEID>   // Collection Event ID
                                <L
                                        <U4 RPTID>   // Report ID
                                        ...
                                >
                        >
                        ...
                >
        >.
```

A list of zero length following CEID deletes all report links to that event.

S2,F36 Link Event Report Acknowledge

Description: Acknowledge or error. If an error condition is detected the entire message is rejected (i.e., partial changes are not allowed).
Structure:

```
S2F36                               // Direction of transmission: H ⇐ E
        <B [1] LRACK>.              // Acknowledge Code
```

S2,F37 Enable/Disable Event Report

Description: The purpose of this message is for the Host to enable or disable reporting for a group of events (CEIDs).
Structure:

```
S2F37 W                                  // Direction of transmission: H ⇒ E
        <L [2]
                <BOOLEAN CEED>           // Coll. Event Enable Flag
                <L
                        <U4 CEID>        //Collection Event ID
                        ...
                >
        >.
```

A list of zero length following <CEED> means all CEIDs.

S2,F38 Enable/Disable Event Report Acknowledge

Description: Acknowledge or error. If an error condition is detected the entire message is rejected, i.e., partial changes are not allowed.
Structure:

```
S2F38                                    // Direction of transmission: H ⇐ E
        <B [1] ERACK>.                   // Acknowledge Code
```

S2,F39 Multi-block Inquire

This message has been implemented only for compatibility with old Customers' interfaces. It will have no effect, because multiblock is not implemented. No message in LPE interface requires a multiblock inquiry. The answer will always be GRANT = 0
Structure:

```
S2F39 W                                  // Direction of transmission: H ⇒ E
      <L [2]
            <U4 DATAID>                  // DATAID
            <U4 DATALENGTH>
      >.
```

S2,F40 Multi-block Grant

Description: Grant permission to send multi-block message.
Structure:

```
S2F40                                    // Direction of transmission: H ⇐ E
      <B [1] GRANT>.                     // GRANT
```

S2,F41 Host Command Send

Description: The Host requests the Equipment to perform the specified remote command with the associated parameters.
Structure:

```
S2F41 W                                     // Direction of transmission: H ⇒ E
    <L [2]
        <A[n] RCMD>                         // Remote CoMmanD string
        <L
            <L [2]
                <A[n] CPNAME>               // Command Parameter Name
                <A[n] CPVAL>                // Command Parameter Value
            >
            ...
        >
    >.
```

S2,F42 Host Command Acknowledge

Description: Acknowledge Host command or error. If command is not accepted due to one or more invalid parameters (i.e., HCACK=3), then a list of invalid parameters will be returned containing the parameter name and reason for being invalid.
Structure:

```
S2F42                                       // Direction of transmission: H ⇐ E
    <L [2]
        <B [1] HCACK>                       // Host Command Acknowledge Code
        <L [n]                              // n=number of erroneous parameters
            <L [2]
                <A[n] CPNAME>               // Name of parameter
                <B[1] CPACK>                // Cmd Param Ack Code
            >
            ...
        >
    >.
```

If there are no invalid parameters, then a list of zero length will be sent for item 2.

S5,F1 Alarm Report Send

Description: This message reports a change in or presence of an alarm condition.
One message will be issued when the alarm is set and one message will be issued when the alarm is cleared.
Structure:

```
S5F1 W                                  // Direction of transmission: H ⇐ E
        <L [3]
                <B [1] ALCD>            // Alarm On/Off and Severity
                <U4 ALID>               // Alarm ID
                <A [n] ALTX>            // Alarm Text
        >.
```

S5,F2 Alarm Report Acknowledge

Description: The Host acknowledges the Alarm Report. PE3061 ignores ACKC5.
Structure:

```
S5F2                                    // Direction of transmission: H ⇒ E
        <B [1] ACKC5>.                  // Alarm Acknowledge
```

S5,F3 Enable/Disable Alarm Send

Description: This message will change the state of the enable bit in the Equipment. The enable bit determines if the alarm will be sent to the Host.
Structure:

```
S5F3 W                                  // Direction of transmission: H ⇒ E
        <L [2]
                <B [1] ALED>            //  Alarm Enable/Disable Code
                <U4 ALID>               // Alarm ID
        >.
```

A zero-length item for ALID means all alarms.

S5,F4 Enable/Disable Alarm Acknowledge

Description: Acknowledge or error.
Structure:

```
S5F4                                    // Direction of transmission: H ⇐ E
        <B [1] ACKC5>.                  // Acknowledge Code
```

S5,F5 List Alarms Request

Description: This message requests the Equipment to send alarm information to the Host.
Structure:

S5F5 W. // Direction of transmission: H ⇒ E

<U4 ALID1,...,ALIDn>.

A zero-length item means send all possible alarms regardless of the state of ALED in alphabetic order by ALID.

S5,F6 List Alarm Data

Description: This message contains the alarm data known to the Equipment.
Structure:

S5F6 // Direction of transmission: H ⇐ E

```
<L
        <L[3]

                <B[1] ALCD>
                <U4 ALID>
                <A[40] ALTX>
        >
        …
>.
```

If upper list is empty no response can be made. A zero-length item returned for ALCD or ALTX means that the corrisponding alarm does not exist.

S6,F11 Event Report Send

Description: The purpose of this message is for the Equipment to send a defined, linked, and enabled group of reports to the Host upon the occurrence of an event (CEID).
Structure:

```
S6F11 W                                     // Direction of transmission: H ⇐ E
    <L [3]
        <U4 DATAID>                         // DATAID
        <U4 CEID>                           // Collection Event ID
        <L
            <L [2]
                <U4 RPTID>                  // Report ID
                <L
                    <U4 V> // Variable Value
                    ...
                >
            >
            ...
        >
    >.
```

If there are no reports linked to the event a 'null' report is assumed. A zero-length list for reports means there are no reports linked to the given CEID.

S6,F12 Event Report Acknowledge

Description: The Host acknowledges the Event Report. PE3061 Equipment ignores ACKC6.
Structure:

```
S6F12                               // Direction of transmission: H ⇒ E
    <B [1] ACKC6>.                  // Acknowledge Code
```

S6,F15 Event Report Request

Description: The purpose of this message is for the Host to demand a given report group from the Equipment.
Structure:

```
S5F15 W.                                    // Direction of transmission: H ⇒ E

        <U4 CEID>.
```

S6,F16 Event Report Data

Description: Equipment sends reports linked to given CEID to Host.
Structure:

```
S6F16 W                                     // Direction of transmission: H ⇐ E
        <L [3]
                <U4 DATAID>                 // DATAID
                <U4 CEID>                   // Collection Event ID
                <L
                        <L [2]
                                <U4 RPTID>  // Report ID
                                <L
                                        <U4 V>// Variable Value
                                        ...
                                >
                        >
                        ...
                >
        >.
```

A zero-length item means there are no reports linked to the given CEID.
The Equipment generates a DATAID meaningless.

S6,F19 Individual Report Request

Description: The purpose of this message is for the Host to request the values of a defined report from the Equipment.
Structure:

S6F19 W. // Direction of transmission: H ⇒ E

<U4 RPTID>.

S6,F20 Individual Report Data

Description: Equipment sends variable data defined for the given RPTID to the Host.
Structure:

S6F20 W // Direction of transmission: H ⇐ E

<L
<V>
…
>.

A zero length list means RPTID is not defined.

S6,F23 Request Spooled Data

Description: The purpose of this message is for the Host to request transmission or deletion of the messages currently spooled by the Equipment. According to the Equipment control software capabilities only the following messages will be eventually placed in the SPOOL: S5F1, S6F1 and S6F11.
Structure:

S6F23 W. // Direction of transmission: H ⇒ E

<U1 RSDC>.

S6,F24 Request Spooled Data Acknowledgement Send

Description: The purpose of this message is to acknowledge the receipt of the Request Spooled Data (S6,F23) and to respond with an appropriate acknowledge code.
Structure:

S6F24 // Direction of transmission: H ⇐ E

<B[1] RSDA>.

S7,F1 Process Program Load Inquire

Description: This message is used to initiate the transfer of a process program or to select from stored programs. The message may be used to initiate the transfer of an unformatted process program (S7,F3/S7,F4).
Structure:

```
S7F1 W                          // Direction of transmission: H ⇒ E
    <L [2]
        <A PPID>                // Process Program ID (the PATH is no more required)
        <U4 LENGTH>             // Length of text
    >.
```

S7,F2 Process Program Load Grant

Description: This message gives permission for the process program to be loaded.
Structure:

```
S7F2                            // Direction of transmission: H ⇐ E
    <B [1] PPGNT>.              // Acknowledge Code
```

S7,F3 Process Program Send

Description: This message is used to send a program. It must be preceded by the S7,F1/S7,F2 Inquire/Grant transaction.
Structure:

```
S7F3 W                          // Direction of transmission: H ⇒ E
    <L [2]
        <A PPID>                // Process Program ID including PATH NAME
        <A PPBODY>              // Process Program Body
    >.
```

S7,F4 Process Program Acknowledge

Description: Acknowledge or error.
Structure:

```
S7F4                            // Direction of transmission: H ⇐ E
    <B [1] ACKC7>.              // Acknowledge Code
```

WARNING! Be very carefull if you intend to modify recipes on Host side. The equipment will recognize and refuse recipes containing syntactic errors, but will not grant the accuracy of the data for the intended purpose of the recipe. I.e. if a deposition time should be 100 seconds, and the recipe is wrongly edited to 10, or if during the data transmission a byte is lost and and the resulting number is not correct, the equipment will accept the recipe as valid. The data accuracy of the recipe is totally demanded to the Customer.

S7,F5 Process Program Request

Description: This message is used to request the transfer of a process program.
Structure:

```
S7F5 W                          // Direction of transmission: H ⇒ E
    <A PPID>.                   // Process Program ID including PATH NAME
```

S7,F6 Process Program Data

Description: This message is used to transfer a process program. If PPID and PPBODY are empty strings, it means that the required PPID is not existing
Structure:

```
S7F6                            // Direction of transmission: H ⇐ E
    <L [2]
        <A PPID>                // Process Program ID included/including PATH NAME
        <A PPBODY>              // Process Program Body
    >.
```

S7,F17 Delete Process Program Send

Description: This message is used by the Host to request the Equipment to delete process programs from Equipment storage.
Structure:

```
S7F17 W                          // Direction of transmission: H ⇒ E
    <L
        <A PPID>                 // Process Program ID including PATH NAME
        ...
    >.
```

S7,F18 Delete Process Program Acknowledge

Description: Acknowledge or error
Structure:

```
S7F18                            // Direction of transmission: H ⇐ E

    <B [1] ACKC7>.               // Acknowledge Code
```

S7,F19 Current EPPD Request

Description: This message is used to request the transmission of the current Equipment process program directory (EPPD). This is a list of all the PPIDs of the process programs stored in the Equipment.
Structure:

S7F19 W. // Direction of transmission: H ⇒ E

S7,F20 Current EPPD Data

Description: This message is used to transmit the current EPPD.
Structure:

S7F20 // Direction of transmission: H ⇐ E

```
<L
        <A PPID>        // Process Program ID included PATH NAME
        ...
>.
```

S9,F1 Unrecognized Device ID

Description: The Device ID in the message block header received from the Host did not correspond to the Equipment's Device ID setting.
Structure:

S9F1	// Direction of transmission: H ⇐ E
<B [10] MHEAD>.	// Header of bad msg

S9,F3 Unrecognized Stream Type

Description: The Equipment does not recognize the stream type in the message block header.
Structure:

```
S9F3                                  // Direction of transmission: H ⇐ E
        <B [10] MHEAD>.               //  Header of bad msg
```

S9,F5 Unrecognized Function Type

Description: This message indicates that the function in the message ID is not recognized by the receiver.
Structure:

S9F5	// Direction of transmission: H ⇐ E
<B [10] MHEAD>.	// Header of bad msg

S9,F7 Illegal Data

Description: This message indicates that the stream and function were recognized, but the associated data format could not be interpreted.
Structure:

S9F7	// Direction of transmission: H ⇐ E
<B [10] MHEAD>.	// Header of bad msg

S9,F9 Transaction Timer Timeout

Description: This message indicates that a transaction (receive) timer has timed out and that the corresponding transaction has been aborted. It is up to the Host to respond to this error in an appropriate manner to keep the system operational.
Structure:

S9F9 // Direction of transmission: H ⇐ E
<B [10] SHEAD>. // Header of bad msg

S10,F3 Terminal Display, Single

Description: Send data to be displayed on the Equipment console.
Structure:

```
S10F3 W                                  // Direction of transmission: H ⇒ E
      <L [2]
            <B [1] TID>                  // Terminal ID
            <A [n] TEXT>                 // Message Text
      >.
```

S10,F4 Terminal Display, Single Acknowledge

Description: Acknowledge or error.
Structure:

```
S10F4                                    // Direction of transmission: H ⇐ E
      <B [1] ACKC10>.                    // Acknowledge Code
```

S10,F5 Terminal Display, Multi-Block

Description: Send data to be displayed on the Equipment's terminal.
Structure:

S10F5 // Direction of transmission: H ⇒ E

```
<L[2]
        <B[1] TID>
        <L
                <A[n] TEXT>
                …
        >
>.
```

S10,F6 Terminal Display, Multi-block Acknowledge

Description: Acknowledge or error
Structure:

S10F6 // Direction of transmission: H ⇐ E

```
<B [1] ACKC10>.          // Acknowledge Code
```

NOTES

Remote Terminal Series KV752AE

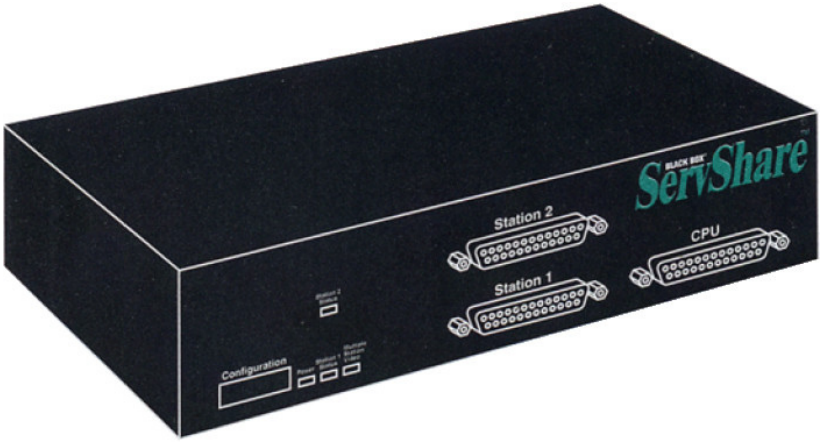

User Manual

Remote Terminal KV752AE - MAN0049 - Rev. 05 - 25/10/2007

LPE S.p.A.
Via Falzarego, 8
20021 Baranzate (Milano) Italy
Tel. +39 02 38 34 15 1

ALL RIGHTS RESERVED - LPE S.p.a.

The information included in this document must be considered as absolutely reserved and confidential. This document must not be reproduced, even partially, shown, disclosed to a third party, or used for purposes different from those authorized in written form by the Company.

Letter of Delivery of the Manual

This Manual:

Remote Terminal KV752AE - MAN0049 - Rev. 05 - 25/10/2007

is an integral part of the product:

Model	KV752AE
Serial Number	
Equipment Name	Remote Terminal
Year of manufacture	

The information contained in this manual (the "Manual") must be considered as absolutely secret and confidential.

This Manual and the information included herein must not be, even partially, copied, reproduced, shown, disclosed to any third party, or used for purposes different from those described herein or authorized in written form by LPE S.p.A. ("LPE").

By signing this Letter of Delivery, the customer company confirms that the manual:

Remote Terminal KV752AE - MAN0049 - Rev. 05 - 25/10/2007

has been received.

For acceptance:

....

Date Signature

This page has been left blank intentionally

Table of Contents

1 General Information 1

1.1 Overview - 1

1.2 Property of the Information - 1

1.3 This Manual - 1

1.3.1 Information about the Manual. 1

1.3.2 Intended Users 1

1.3.3 Using the Manual. 2

1.4 Conventions - 2

1.4.2 Typographical Conventions 2

1.5 Administrative data - 3

1.5.1 Manufacturer Identification and Contacts 3

1.5.2 Product Identification. 3

1.8 Warranty - 3

1.9 Service - 3

1.10 Liability - 4

2 Description 5

2.1 Kit Components - 5

2.2 Front Panel of the ServShare - 5

3 Installation 7

4 Configuration 9

5 Using the LPE Remote Terminal System 11

5.1 Specifications - 11

5.2 Commands to ServShare KVM switch - - - - - - - - - - - - - - - - - - - 12

5.3 Switching procedure - 13

5.4 Example of use - 14

5.5 Remote Terminal State diagram - 15

This page has been left blank intentionally

1 General Information

1.1 Overview

This manual describes the product identified in *1.5.2 - "Product Identification"* and all the procedures for the correct installation and use of this product.

1.2 Property of the Information

NOTE
All rights are reserved under international copyright conventions.

The information contained in this manual (the "Manual") must be considered as absolutely secret and confidential.

This Manual and the information included herein must not be, even partially, copied, reproduced, shown, disclosed to any third party, or used for purposes different from those described herein or authorized in written form by LPE S.p.A. ("LPE").

Descriptions and pictures of the product included in this Manual must not be considered as binding.

LPE makes this Manual available on an "as is" basis.

LPE does not warrant the information contained in this Manual against errors or deficiencies of any kind.

LPE specifically disclaims all warranties, either express or implied, including but not limited to the warranties of merchantability and fitness for any particular purpose.

Moreover, no information contained in this Manual can be interpreted as a modification or assertion of the terms of any contract with LPE.

This Manual and the information contained herein is subject to updating by LPE.

1.3 This Manual

1.3.1 Information about the Manual

See the back of the cover.

1.3.2 Intended Users

- Operators
- Process engineers
- Electrical maintenance operators
- LPE personnel
- Personnel authorized by LPE

1.3.3 Using the Manual

This Manual is an integral part of the product herein described (see *1.5.2 - "Product Identification"*) and must always be available to the personnel in charge of using the Product.

Everybody using the product must be aware of the content of this Manual.

Procedures and information given through this Manual are designed for skilled technicians and engineers trained to perform maintenance, software and trouble shooting activities on the product.

Keep this manual for the entire technical life of the product.

If this product is sold to third parties, it must be sold with this manual.

This manual can be used only for operations on the product to which it refers.

NOTE

Do not use the product according to procedures different from those described in this manual.

Do not carry out operations different from those specifically indicated in this manual.

1.4 Conventions

1.4.2 Typographical Conventions

Text in bold italics: indicates a command of the software.

[bold italics]: indicates a key of the keyboard, for example the ***[enter]*** or the ***[control]*** key.

Text in italics: indicates a reference to the title of a Chapter, section, subsection, paragraph, table or figure in this manual or in another document being referred to.

[3] or **[B]**: reference for a control device or indicator (for example, push buttons, selector switches and pilot lights) or for a component of the product.

1.5 Administrative data

1.5.1 Manufacturer Identification and Contacts

Company Name	**LPE S.p.A.**
Address	Via Falzarego 8 20021 Baranzate (Milan) - Italy
Phone/Fax/E-mail	++39.02.3834151 ++39.02.38306118 info@lpe-epi.com
Worldwide Contacts	See www.lpe-epi.com for a complete list of our worldwide representatives

In this manual, the short name for "LPE S.p.A." will be "LPE".

1.5.2 Product Identification

Model	Series KV752AE
Serial Number	See the identification plate on the product
Product Name	Remote Terminal
Year of manufacture	See the identification plate on the product

1.8 Warranty

LPE S.p.A product have a 1 year warranty.

For further details about the warranty, please refer to the purchase contract.

Any repair or extraordinary maintenance operation carried out without the prior written authorization of the manufacturer during warranty, automatically invalidates the warranty itself.

1.9 Service

LPE Customer Service provides information, technical support, training and on-site service operations.

LPE's technicians are available for any further information, technical data or information for the resolution of any operation problem as an integration of the contents of this Manual.

1.10 Liability

In order to use the product safely it is essential to comply with the conditions listed in this manual.

LPE shall not be liable to the users, nor to any other person, firm, company or other body for any direct or indirect damage or loss due to the application of the instructions contained herein or to an inobservance of the Safety Rules in force in the country of installation.

Do not modify the product or carry out any repairs or extraordinary maintenance operation without prior authorization of LPE. In such cases LPE will not be held responsible for the compliance with general safety standards.

On acceptance of the product, the customer company becomes fully responsible for the safety of the whole product.

The use of special product not manufactured and installed by LPE can modify the conditions of use of the product; it is therefore necessary to submit any special product to the acceptance of LPE S.p.A. Failure to observe such procedure relieves LPE from any responsibility.

All special product directly installed by LPE is provided with the documents necessary to comply with the safety standards.

Use only LPE original spare parts for any maintenance operations.

2 Description

2.1 Kit Components

The Remote Terminal kit is made of the following components:

Component	Quantity
LCD Monitor 17” minimum resolution 1280x1024	1
PC Keyboard PS/2	1
PC Mouse PS/2	1
ServShare (labelled KV752AE or KV752A)	1
KVM cables (labelled EHN383-0010)	2
CPU cable (labelled EHN382-0005)	1

2.2 Front Panel of the ServShare

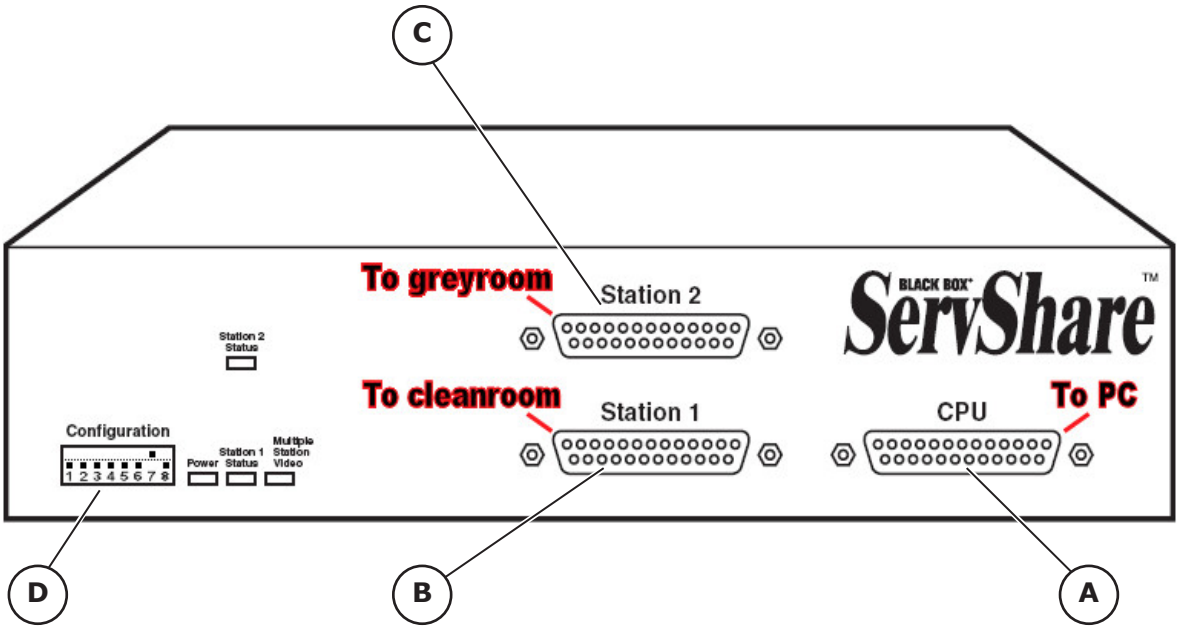

Fig. 2.1

Ref.	Description
A	CPU port
B	KVM Station 1 port
C	KVM Station 2 port
D	Configuration deepswitches

This page has been left blank intentionally

3 Installation

- Plug the power supply cable, paying attention to the label under the socket.

NOTE
The ServShare equipment should be electrically connected to the same UPS unit that supplyie power to the GUI PC.

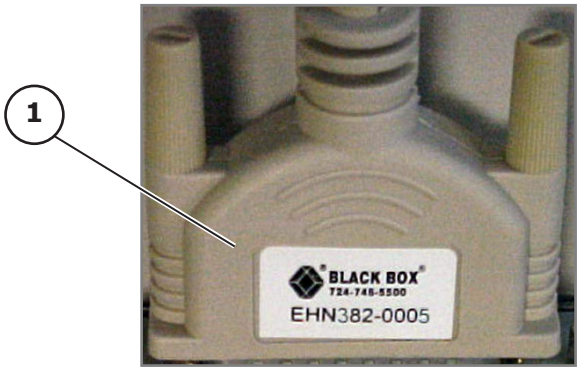

Fig. 3.1

- Plug the CPU cable **[1]** to the ServShare port named "CPU" (see *Fig. 2.1* ref. **[A]**).

Fig. 3.2

- Plug the terminals at the other side of the cable to the proper PC ports.

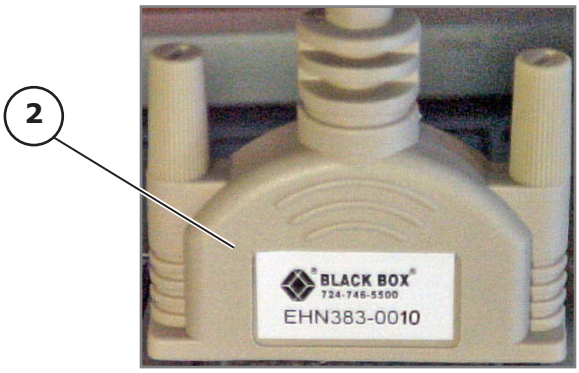

Fig. 3.3

- Connect the first KVM cable **[2]** to the ServShare port named "Station 1" (see *Fig. 2.1* ref. **[B]**).

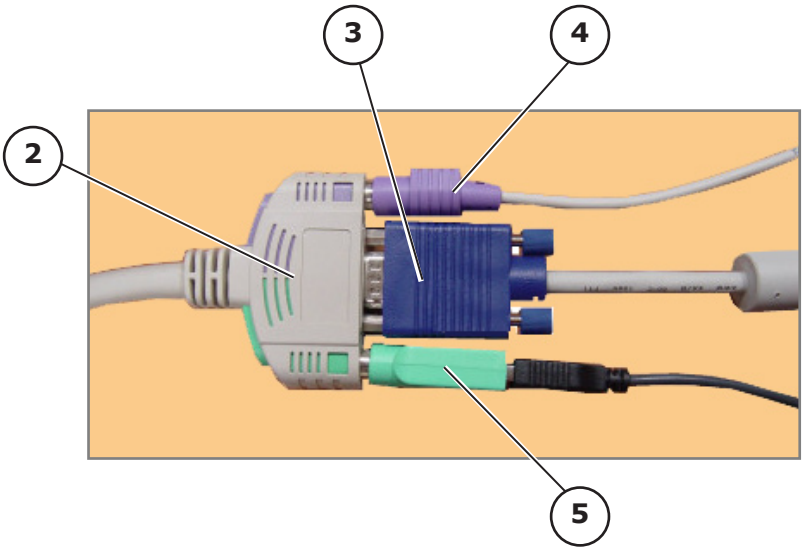

Fig. 3.4

- At the other side of the cable, plug:
  - the terminal **[3]** to the monitor**,**
  - the terminal **[4]** to the keyboard,
  - the terminal **[5]** to the mouse

  that are placed in the **clean room**.

- Connect the second KVM cable **[2]** to the ServShare port named "Station 2" (see *Fig. 2.1* ref. **[C]**).

- At the other side of the cable, plug:
  - the terminal **[3]** to the monitor**,**
  - the terminal **[4]** to the keyboard,
  - the terminal **[5]** to the mouse

  that are placed in the **gray room**.

4 Configuration

Every Remote Terminal system is installed, thoroughly tested and configured at LPE site.

LPE suggests to leave unchanged all the parameters.

The configuration is left like BlackBox factory defaults, with the following exceptions:

- The keyboard/mouse timeout to enable CPU access is set to 255 (timeout disabled), instead of 2.

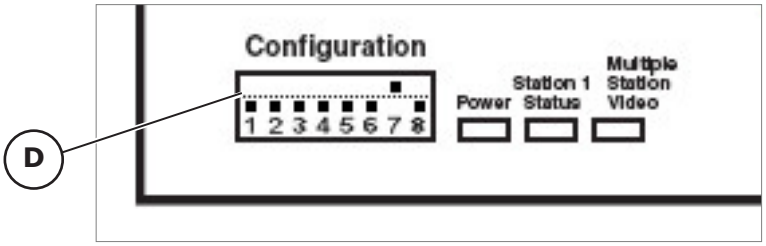

Fig. 4.1

- The configuration dipswitches **[D]** are all off except for number 7, instead of all off except for number 7 and 8 (it means that only the grey room station is enabled to send commands to the ServShare).

No On-Screen Display is provided.

See the *ServShare Manual*, particularly chapter "Operation", for instructions about how to modify the configuration.

NOTE

LPE will not be held responsible for any malfunctioning due to abnormal configuration.

This page has been left blank intentionally

5 Using the LPE Remote Terminal System

5.1 Specifications

The Remote Terminal system is based on the KVM (Keyboard Video and Mouse) switch technology.

The Remote Terminal system is designed and configured to satisfy the following specifications:

- Having two consoles to control the reactor.
- Having both monitors alive and displaying the same thing at the same moment.
- Transferring the control between the two keyboards at run-time, without having to reboot or exiting current applications.
- Implementing a strong safety procedure to switch safely between the two consoles.

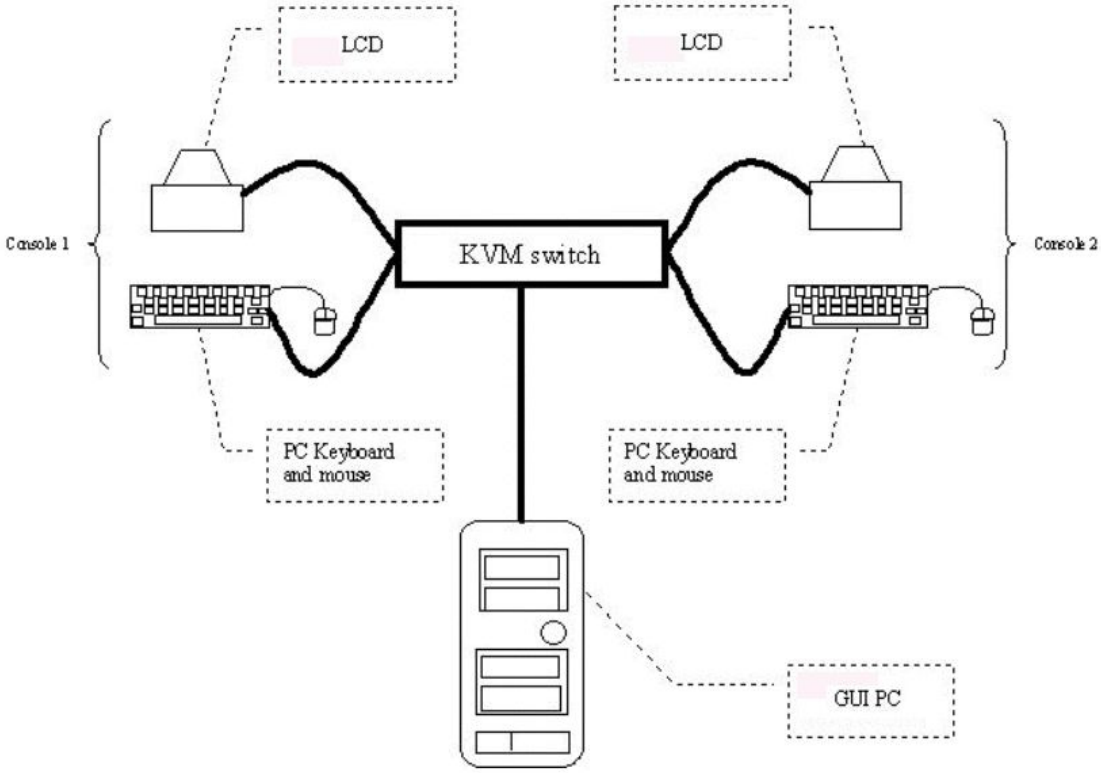

Fig. 5.1 - Topologic scheme of the KVM switch

As shown in the figure above, since the dangerous area is in the grey-room (maintenance area) and not in the clean-room, the following rules have been implemented:

- The clean-room station cannot gain control of the PC, unless the grey-room station gives **explicitly** the permission.
- The grey-room station instead can gain control of the PC, even without explicit permission from the clean-room. However it is not possible to gain the control accidentally, since the control can be obtained only with a combination of keystrokes.

5.2 Commands to ServShare KVM switch

ServShare can be operated by the keyboard.

To enter any command at a user station shared keyboard:

- Press and release the Control Key on the right of the keyboard (in the following it will be represented by: ***[CTRL]***).

  This cues the ServShare to look for commands from that keyboard.
- Enter the command you want to execute, which is represented by a letter.
  - Commands are not case-sensitive.
  - Do not press ***[CTRL]*** and the command letter at the same time: it will not work.
  - Do not use the ***[CTRL]*** key on the left of the keyboard.

All of the commands have a 2 second timeout between characters. This means that the command is aborted if you begin entering a command but you stop for more than 2 seconds before you type the final character. This avoids that the ServShare gets stuck waiting for you to finish the command.

The ***[CTRL]*** character is always passed through to the CPU.

The command characters, however, are absorbed by the ServShare and are not sent to the CPU.

The command of interest are the following:

- ***[CTRL] F*** - **Freeze Other Stations**: disable the keyboard and mouse at the other station, but continue to display the video.
- ***[CTRL] E*** - **Enable Other Stations**: enable keyboard, mouse, and monitor at both stations.

The ServShare is configured so that the only station enabled to send commands is the grey-room station. Every command sent through the clean-room station will not be recognized.

See Chapter "Operation" of the *ServShare Manual* for other available commands and instructions about how to enable the clean-room station to send commands to the ServShare.

NOTE

LPE strongly recommends not to use any other command or modify the configuration.

LPE will not be held responsible for any malfunctioning due to abnormal configuration.

5.3 Switching procedure

When switched on, the ServShare KVM switch behaves as follows:

→ Both monitors are alive and display the same thing at the same moment, but only the clean-room station is active and can control GUI PC: the grey-room station is passive.

→ To switch control from the clean-room to the grey-room:

- There must be no activity in the clean-room (no mouse move and click and no keyboard strokes).
- The operators in the grey-room:
  - Send the ***[CTRL] E*** command, to enable both stations to gain control.
  - Send the ***[CTRL] F*** command to disable keyboard and mouse in clean-room.

  From this moment, the clean-room will only be able to see the video

→ To switch control from the grey-room to the clean-room:

- The operators in the grey-room send the ***[CTRL] E*** command, to enable both stations to gain control.
- The operators in the clean-room move the mouse or hit any key.

  From this moment, the operators in the grey-room will only be able to see the video, unless they want explicitly to gain control.

Accidental switching is not possible (see *5.1*).

5.4 Example of use

1 **Starting situation:**
both monitors display the same thing but only the clean-room station is active.

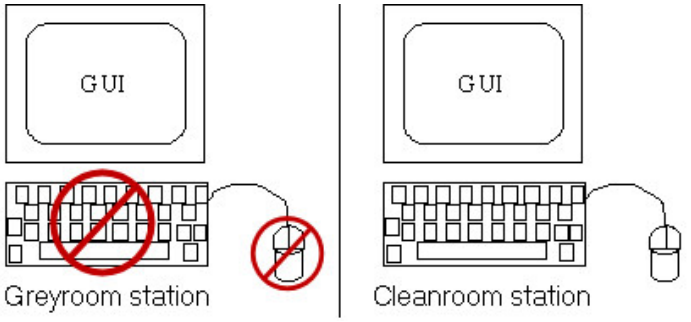

2 The grey-room station enables both stations (included itself) by sending ***[CTRL] E***: both stations can interact with CPU.

Now, the station that will press a key or move the mouse will gain the CPU control.

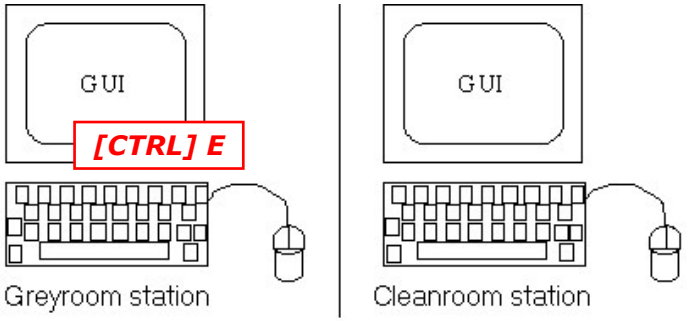

3 The grey-room send ***[CTRL] F*** to freeze the clean-room station, gaining the CPU control.

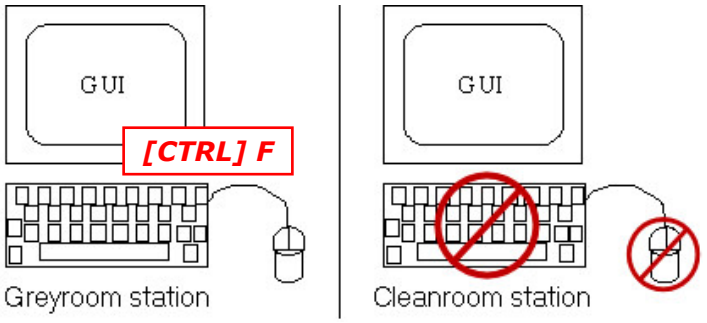

4 To give the control back to clean-room, the grey-room enables both stations (included itself) by sending ***[CTRL] E***: now both stations can interact with the CPU.

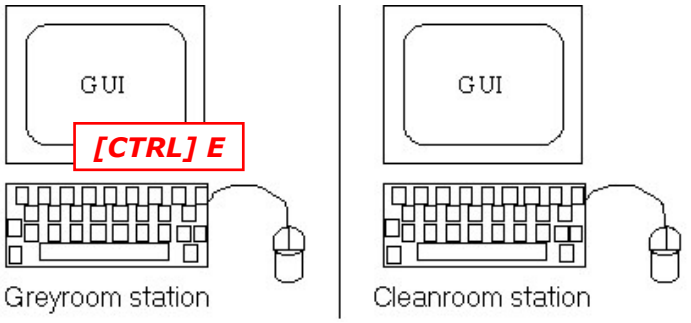

5 As soon as the clean-room press a key or moves the mouse, the system will return to the starting situation **[1]**.

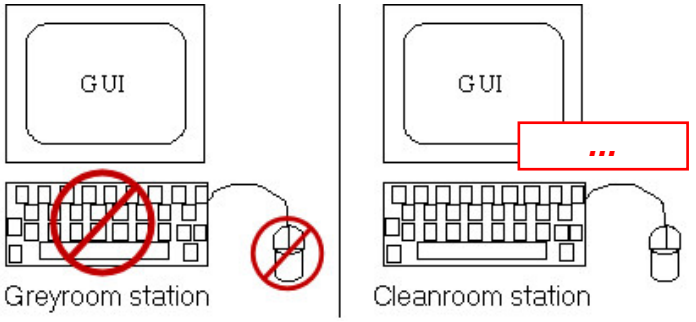

5.5 Remote Terminal State diagram

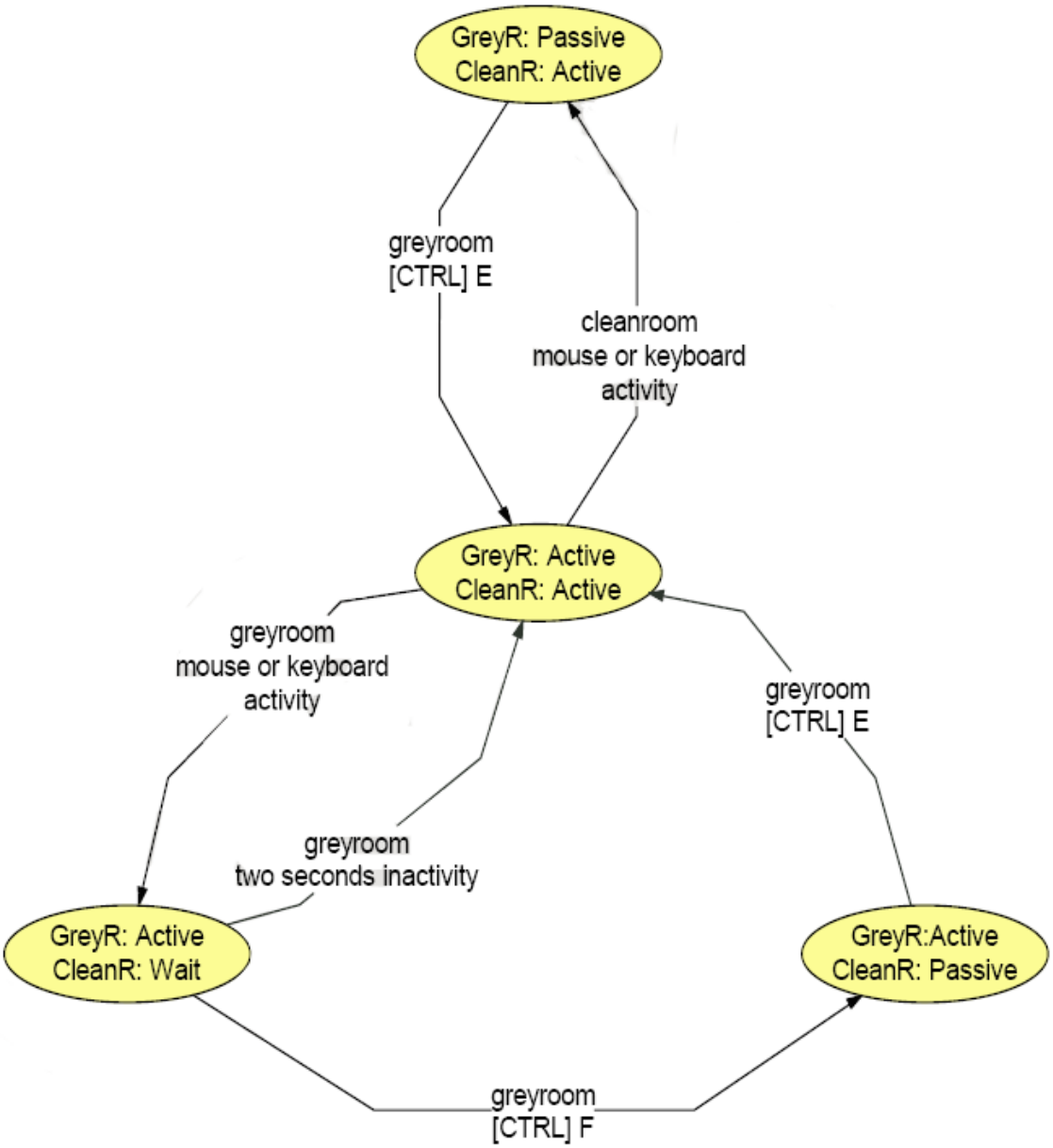

Fig. 5.2 - State diagram

The figure above represents the behaviour of the KVM switch in the LPE configuration.

- The ellipses represent the system states.
- The arrows represent a state transition.
- The labels along the arrows represent the actions that trigger the transitions.

All actions not described are meant to leave the system in the current state.

This page has been left blank intentionally

All rights reserved

LPE S.p.A.

Via Falzarego, 8 - 20021 Baranzate (Milano) Italy

Liquid Chlorosilane Bubbler Saturator

User and Maintenance Manual

MAN0050 - REV.07 - 22/05/2015

LPE S.p.A.
Via Falzarego, 8
20021 Baranzate (Milano) Italy
Tel: ++39.02.3834151
Fax: ++39.02.38306118
Mail: info@lpe-epi.com

ALL RIGHTS RESERVED - LPE S.p.a.

The information contained in this document is strictly private and confidential. This document should not be reproduced, even partially, displayed, disclosed to third parties, or used for purposes different to those authorised in writing by the company LPE S.p.A.

Table of Contents

1. GENERAL INFORMATIONS 1

1.1 OVERVIEW - 2

1.2 PROPERTY RIGHTS - 2

1.3 THIS MANUAL - 2

1.3.1 Intended Users 2

1.3.2 Using the Manual. 2

1.4 TYPOGRAPHICAL CONVENTIONS - 3

1.5 COMPLIANCE WITH EUROPEAN DIRECTIVES - - - - - - - - - - - - - - - - - 3

1.6 WARRANTY - 3

1.7 BUBBLER IDENTIFICATION - 3

1.8 LIABILITY - 4

2. SAFETY REQUIREMENTS 5

2.1 GRAPHIC CONVENTIONS AND DEFINITIONS - - - - - - - - - - - - - - - - - 6

2.1.1 Standard symbols 6

2.1.2 Other symbols 7

2.2 PERSONAL PROTECTIVE EQUIPMENT (PPE) - - - - - - - - - - - - - - - - 8

2.3 WARNING PLATES OF RESIDUAL RISKS, PROHIBITIONS AND OBLIGATIONS 9

2.3.1 Layout of plates and description. 10

2.4 GENERAL SAFETY REGULATIONS - 11

2.4.1 Definitions 11

2.4.2 REQUIREMENTS 12

2.6 SPARE PARTS - 16

2.7 WHAT TO DO ! - 17

2.8 WHAT NOT TO DO ! - 18

3. SYSTEM DESCRIPTION AND TECHNICAL INFORMATION 19

3.1 SYSTEM DESCRIPTION - 20

3.2 AUTOMATIC REFILLING - 20

3.3 TECHNICAL INFORMATION - 21

3.3.1 Models 21

3.3.2 Construction 21

3.3.3 Services & connections 22

3.3.4 Dimension and weight 22

3.3.5 Features. 22

3.2.6 Component list. 24

4. CONTROL DEVICES 25

4.1 INTRODUCTION - 26

4.2 VALVES GROUP - 26

5. HANDLING AND INSTALLATION 29

5.1 INTRODUCTION - 30

5.2 HANDLING THE PACKAGED BUBBLER - - - - - - - - - - - - - - - - - - 35

5.2.1 Handling the crates with a fork lift truck 37

5.2.2 Handling the crates with a bridge crane and cables 38

5.2.3 Handling with a fork truck 39

5.3 NOTES AFTER HANDLING, BEFORE THE CONNECTIONS - - - - - - - - 40

5.4 DISPOSAL OF PACKAGING - 40

5.5 INSTALLATION PREPARATIONS - 41

5.6 INSTALLATION - 43

5.6.1 Positioning. 43

5.6.2 Connections 44

5.6.3 First bubbler filling 46

6. MAINTENANCE 47

6.1 INTRODUCTION - 48

6.2 PLANNED INSPECTIONS - 48

6.2.1 Every month. 48

6.2.2 Every 6 month 48

7. DISMANTLING AND DISPOSAL OF THE PRODUCT 49

7.1 DISMANTLING - 50

7.2 DISPOSAL - 51

8. CUSTOMER SERVICE INFORMATION 53

9. DIAGRAMS AND ATTACHMENTS 55

9.1. INTRODUCTION - 56

9.2. STANDARD MODEL- 57

9.3. MINISPEED MODEL - 58

9.4. LAYOUT (STANDARD AND MINISPEED MODEL)- - - - - - - - - - - - - - 59

9.5. VALVES ASSEMBLY- 60

9.6 CONTROL BOX - CONNECTION SINGLE BELL - - - - - - - - - - - - - - 61

9.7 CONTROL BOX - CONNECTION DOUBLE BELL - - - - - - - - - - - - - - 62

9.8. CONTROL BOX - PNEUMATIC CONNECTIONS - - - - - - - - - - - - - - 63

This page has been left blank intentionally

Letter of Acceptance of the Manual

This Manual:

MAN0050 - REV.07 - 22/05/2015

is an integral part of the Liquid Chlorosilane Bubbler Saturator:

Model	See the nameplate on the product.
Serial Number	See the nameplate on the product.
Year of manufacture	See the nameplate on the product.

The information contained in this manual (the "Manual") is private and confidential.

This Manual and the information included herein should not be reproduced, even partially, copied, displayed, disclosed to third parties, or used for purposes different to those described herein or authorized in writing by LPE S.p.A. ("LPE").

By signing this Letter of Acceptance, the customer confirms that the manual:

MAN0050 - REV.07 - 22/05/2015

has been delivered.

Accepted by:

....

Date Signature

This page has been left blank intentionally

1. GENERAL INFORMATIONS

Contents of this Section

1.1 OVERVIEW - 2
1.2 PROPERTY RIGHTS - 2
1.3 THIS MANUAL - 2
1.3.1 Intended Users 2
1.3.2 Using the Manual. 2
1.4 TYPOGRAPHICAL CONVENTIONS - - - - - - - - - - - - - - - - - - - 3
1.5 COMPLIANCE WITH EUROPEAN DIRECTIVES - - - - - - - - - - - - - - 3
1.6 WARRANTY - 3
1.7 BUBBLER IDENTIFICATION - 3
1.8 LIABILITY - 4

1.1 OVERVIEW

This manual describes the "Liquid chlorosilane bubbler saturator" ("Bubbler") identified in *1.7 - "Bubbler Identification"* and all the procedures for the correct operations.

1.2 PROPERTY RIGHTS

i	**NOTE**
	All rights are reserved under international copyright conventions.

The information contained in this manual (the "Manual") is strictly confidential.

This Manual and the information contained herein should not be copied, reproduced, shown or disclosed, even partially, to third parties, nor used for purposes different to those described herein or without written authorisation of LPE S.p.A. ("LPE").

The descriptions and images of the Bubbler contained in this Manual are not considered binding.

LPE makes this Manual available on an "as is" basis.

LPE does not warrant the information contained in this Manual against errors or deficiencies of any kind.

Moreover, no information contained in this Manual should be interpreted as a modification or assertion of the terms of any contract with LPE.

This Manual and the information contained herein are subject to updating by LPE.

1.3 THIS MANUAL

1.3.1 Intended Users

All operators assigned to work with the Bubbler, at each phase of its working life, except during assembly at LPE.

1.3.2 Using the Manual

This Manual is an integral part of the Bubbler herein described (see *1.7 - Bubbler Identification*) and should always be readily available to personnel in charge of using the product.

All operators of the Bubbler should be acquainted with the contents of this Manual.

The procedures and information contained in this Manual are designed for skilled technicians and engineers trained to carry out maintenance, software and troubleshooting activities on the product.

This manual must be kept for the entire working life of the product.

If the product is sold to a third party, it must be sold with this manual.

	WARNING
	Do not use the Bubbler using procedures different to those described in this manual. Do not carry out operations different to those specifically indicated in this manual.

	WARNING
	In order to ensure the Bubbler functions properly and safely, as well as reading and understanding this manual, all operations should be carried out by skilled personnel.

1.4 TYPOGRAPHICAL CONVENTIONS

Text in italics: indicates a reference to a title of a chapter, section, subsection, paragraph, table or figure in this manual or in another reference document.

[3] or **[B]**: reference to a control device or indicator (for example, pushbuttons, selector switches and pilot lights) or to a component of the Bubbler.

Pictograms are described in *SECTION 2 - SAFETY REQUIREMENTS*.

1.5 COMPLIANCE WITH EUROPEAN DIRECTIVES

The Bubbler is designed in compliance with applicable European Directives.

1.6 WARRANTY

LPE's product have a 1 year warranty.

For further details about the warranty, please refer to the "warranty" section of the LPE quotation.

Any repairs or extraordinary maintenance carried out without the manufacturer's prior written authorisation during the warranty period shall automatically cancel the warranty.

1.7 BUBBLER IDENTIFICATION

Model	See the nameplate on the product.
Serial Number	See the nameplate on the product.
Year of manufacture	See the nameplate on the product.

In all communication with the manufacturer, LPE, always quote the model, serial number and year of construction of the Bubbler.

This information can be found on the nameplate.

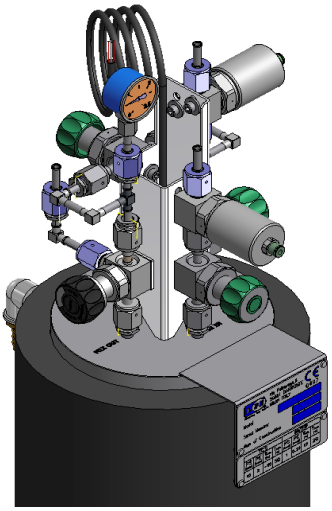

Additional information:

PS = Maximum allowable pressure.

PE = Working pressure.

T_{max}= Maximum allowable Temperature = TS.

T_{min}= Minimum allowable Temperature.

1.8 LIABILITY

For safe use of the product, it is essential to comply with the conditions listed in this manual.

LPE cannot be held liable for users, nor any other person, company or other body for any direct or indirect damage or loss due to the application of the instructions contained herein or for failure to abide by the safety regulations in force in the country of installation.

Do not modify the product or carry out any repairs or extraordinary maintenance without prior authorisation of LPE. In such cases LPE cannot be held responsible for the compliance with general safety standards.

Upon acceptance of the product, the customer is fully responsible for the safety of the entire product.

The use of special equipment not manufactured and installed by LPE can modify the operating conditions of the product; it is therefore necessary to submit any special equipment for acceptance by LPE. Failure to comply with this procedure relieves LPE from any responsibility.

All special equipment directly installed by LPE is supplied with the necessary documents to comply with the safety standards in force.

Only use original LPE spare parts for maintenance work.

2. SAFETY REQUIREMENTS

Contents of this Section

2.1 GRAPHIC CONVENTIONS AND DEFINITIONS- - - - - - - - - - - - - - - - 6

2.1.1 Standard symbols 6

2.1.2 Other symbols 7

2.2 PERSONAL PROTECTIVE EQUIPMENT (PPE) - - - - - - - - - - - - - - - 8

2.3 WARNING PLATES OF RESIDUAL RISKS, PROHIBITIONS AND OBLIGATIONS9

2.3.1 Layout of plates and description. 10

2.4 GENERAL SAFETY REGULATIONS- 11

2.4.1 Definitions 11

2.4.2 REQUIREMENTS 12

2.6 SPARE PARTS - 16

2.7 WHAT TO DO ! - 17

2.8 WHAT NOT TO DO ! - 18

2.1 GRAPHIC CONVENTIONS AND DEFINITIONS

2.1.1 Standard symbols

This instruction manual contains several symbols. Pictograms warn of hazards, obligations and prohibitions and comply with European directive 92/58/CEE:

	WARNING SYMBOL - To warn personnel of situations that may require particular attention or caution. For example:	
		GENERAL WARNING - To warn personnel that if operations are not carried out in accordance with the safety requirements, this can cause possible injuries or damages to people or things.
	PROHIBITION SYMBOLS - To warn personnel an operation is forbidden. For example:	
		NO ACCESS TO UNAUTHORISED PERSON - To warn personnel it is prohibited to carry out maintenance, cleaning or lubrication with the machine running.
		NO ACCESS - To warn personnel it is prohibited to enter an area.
	MANDATORY SYMBOLS - To warn personnel that personal protective equipment must be used or a specific action carried out. For example:	
		WEAR PROTECTIVE GLOVES - To warn personnel protective gloves must be worn to carry out the work activities.
		READ THE MANUAL - To warn personnel it is compulsory to read the manual before carrying out work activities.
	WARNING SYMBOL - To warn personnel of situations that may require particular attention or caution. For example:	
		(HEALTH) WARNING - To warn personnel that the content can be harmful, irritating and / or toxic.
		(PHISICAL) WARNING - To warn personnel that the content of vessel is a flammable substance.

2.1.2 Other symbols

In addition to standard symbols this instruction manual contains other symbols that further highlight the understanding or graphically highlight important information.

	NOTE - To inform personnel of important information.
	WARNING - To warn personnel that failure to abide by the information provided may cause damages to the product.
	OPERATIVE OR MACHINE OPERATOR - Identifies qualified personnel, i.e. with the required know-how for full manual operations. It is strictly forbidden for the operator to carry out the activities that are the sole responsibility of Service Engineers.
	MECHANICAL SERVICE ENGINEER - An engineer qualified to operate the machine in normal operating conditions and carry out the necessary adjustments, maintenance and repair work on mechanical parts.
	HEAD OF DEPARTMENT or **SAFETY REPRESENTATIVE** - See Directive 89/391/EEC.
	SPECIAL INTERVENTIONS - Maintenance interventions accompanied by this symbol must be carried out by the machine's manufacturer.
	PORTABLE LAMPS - Always use portable lamps in case of cleaning, lubrication and maintenance operations in dark environments.

2.2 PERSONAL PROTECTIVE EQUIPMENT (PPE)

In presence of one of the following symbols on the Bubbler or in the Instruction Manual, it is compulsory to use appropriate personal protective equipment, since there is the risk of accidents.

	WEAR PROTECTIVE GLOVES SUITABLE FOR THE WORK ACTIVITY	• HANDLING • ADJUSTING • CLEANING • LUBRICATION • MAINTENANCE
	WEAR SAFETY SHOES	• OPERATORS • SERVICE ENGINEERS
	WEAR OVERALLS CLOSED AT THE WRISTS AND/OR WITHOUT FLAPPING PARTS	• OPERATORS • SERVICE ENGINEERS
	WEAR A PROTECTIVE HELMET	• OPERATORS • SERVICE ENGINEERS
	WEAR A GAS MASK	• OPERATORS • SERVICE ENGINEERS
	WEAR PROTECTIVE EYEWEAR	• OPERATORS • SERVICE ENGINEERS

2.3 WARNING PLATES OF RESIDUAL RISKS, PROHIBITIONS AND OBLIGATIONS

When the product is running, it is totally segregated and safe for the operator. During ADJUSTMENTS, CLEANING and MAINTENANCE, hazardous situations may arise, since the operator is working in hazardous areas.

In these cases, the costumer must affix information plates near hazardous areas that warn of hazards, prohibition and obligations, which are also replicated throughout this manual (*see Chapter 2.3.1*).

ALWAYS ABIDE BY THESE PLATES AND INDICATIONS, AND REPLACE IMMEDIATELY IN CASE OF DAMAGE OR ILLEGIBILITY. THESE OPERATIONS SHOULD ONLY BE CARRIED OUT BY QUALIFIED OPERATORS.

2.3.1 Layout of plates and description

	Meaning	Position
	• Harmful if swallowed (TCS, TET). • Harmful if inhaled (TCS, TET).	Near the bubbler.
	• Causes severe skin burns and eye damage (TCS, TET).	Near the bubbler.
	• Gas under pressure.	Near the bubbler.
	• Flammable liquid and vapour (TCS, TET). • Flammable gas (H2).	Near the bubbler.
	• Wear a gas mask.	Near the bubbler.

	NOTE
	• TCS: trichlorosilane (SiHCl3). • TET: tetrachlorosilane (SiCl4).

2.4 GENERAL SAFETY REGULATIONS

WARNING

Always use a portable lamp in case of cleaning and maintenance operations in dark environments.

2.4.1 Definitions

- **DANGER ZONE** means any zone within and/or around machinery in which an exposed person is subject to a risk to his health or safety; (as described in 98/37/CE directive annex I par. 1.1.1).
- **HAZARDOUS SITUATION** is any situation in which a person is subject to at least one hazard (as described in EN ISO 12100/1 section. 3.9).

2.4.2 REQUIREMENTS

1. The bubbler must be installed only inside a cabinet, in closed rooms and equipped with all the necessary systems provided for by the laws in force in the country of installation.

2. Prior to installing the Bubbler complete of all its parts, the customer must ensure that the floor where the cabinet is installed is suitably level, that is can support the weight and that the technological arrangements are in place (see SECTION 3 – TECHNICAL PARTICULARS) (*fig. 2.1*).

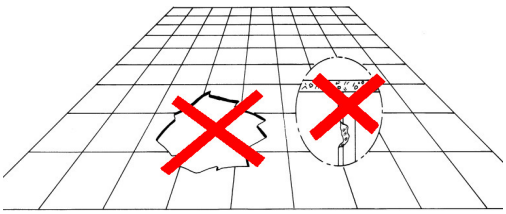

fig. 2.1

3. In any case, the customer must abide by the instructions contained in the document "INSTALLATION SPECIFICATIONS" sent prior to delivery of the Bubbler.

4. Carefully read all the safety regulations contained in this Instruction Manual and in particular the instructions regarding:
   - warning, prohibition and obligation plates;
   - operator;
   - maintenance engineer;
   - function of SAFETY DEVICES;
   - setting up;
   - maintenance.

5. For handling operations of the unpacked Bubbler, please refer to *Section 6* of this manual. In any case, never lift the Bubbler from its projecting parts (*fig. 2.2*).

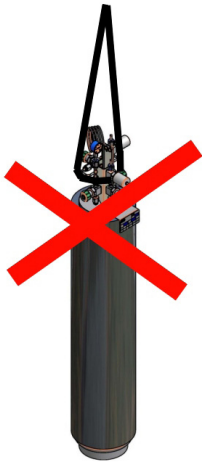

fig.2.2

	MANDATORY Personnel assigned to the transport, positioning phases, must always wear protective gloves, protective footwear and helmet.

6. Be very careful of projecting parts during these phases:
   - transport;
   - positioning;
   - installation;

	MANDATORY Danger of crashes against head and upper limbs. Always wear a safety helmet.

7. The installation, assembly, setting up and extraordinary maintenance of the product should only be conducted by the Engineers of LPE, since they are fully trained on the procedures and equipment (*fig. 2.3*).

fig. 2.3

8. For maintenance and cleaning, place the entire Cabinet to ZERO ENERGY MODE (except where stated otherwise), enclose the area and warn of work in progress by positioning a warning sign "MAINTENANCE IN PROGRESS" *fig. 2.4*).

fig. 2.4

9. Do not place or rest containers of liquids on top of the Bubbler. (*fig. 2.5*).

fig. 2.5

10. The operations of adjustment, maintenance, cleaning and/or replacement or other interventions on the cabinet or its accessories should only be conducted by the customer's Maintenance Engineer, who must always work with utmost care and attention. Always entrust maintenance, adjustments or any other operations that do not fall within duties assigned by the Head of Department, exclusively to assigned personnel (Maintenance Engineer).

	WARNING
	• Reacts violently with water. • Contacts with water releases a toxic gas.

11. Setting up, cleaning and maintenance work should be meticulously carried out by a SINGLE PERSON, NEVER SEVERAL PERSONS, (except where otherwise specified).
12. In addition to explicit obligations, where possible, always make available protective eyewear, protective gloves, protective footwear and any other personal protective equipment required by the situation. Furthermore, always wear work overalls closed at the wrists and always tie back long hair. (*fig. 2.6*)

fig. 2.6

13. In any case, do not wear flapping and/or ripped items and/or clothes (necklaces, watches, bracelets, scarves, headscarves, ties, etc.) (*fig. 2.7*).

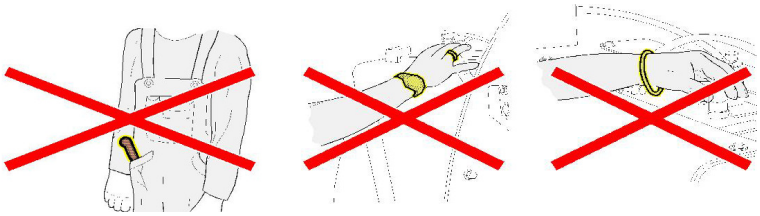

fig. 2.7

	MANDATORY
	Remember, after each cleaning, adjustment and maintenance intervention, all safety devices should be reset and reassemble and/or close all safety covers, make sure nobody is working on the inside of the machine.

14. The bubbler is a pressurized vessel.

    It is manufactured in accordance with the following directive and harmonized standard:

    - PED 97/23/CE.
    - EN 13445-3.

    The user and the maintenance engineer must be suitably skilled, trained and informed, it is also very important to carefully read this Instruction Manual.

    For safety reasons, the bubbler must be used between the pressure range and temperature values, for which it was designed.

    When in operation, the system contains H2 (flammable and exploding gas) and chlorosilane that can generate HCl fumes in the event of leakage, the bubbler must be enclosed in a degassing cabinet of adequate size (see dwg. - The cabinet is NOT PART OF THE SUPPLY). It is advisable to equip the cabinet with an exhaust system and leak detectors.

    It is forbidden to use naked flames near the bubbler.

    Use non-sparking tools during installation and maintenance. Safety precautions and personal protective equipment are required in case of disconnection and/or maintenance on the valve group.

2.6 SPARE PARTS

If it is necessary to replace worn and/or broken parts, use only and exclusively original LPE S.p.A spare parts. To request spare parts and for the order procedure, refer to the attached Spare Parts List (*fig. 2.8*).

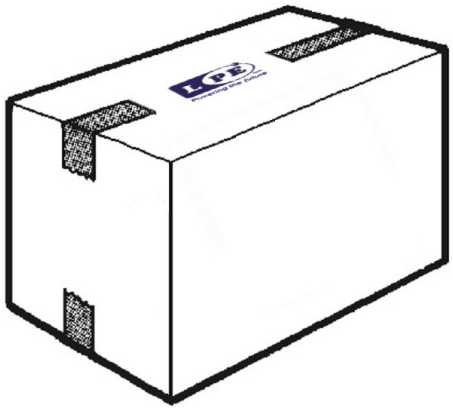

fig. 2.8

2.7 WHAT TO DO !

These points are an integral part of that stated previously.

Proper use, criteria and precautions for use.

Strictly abide by the instructions below:

	WARNING
	ALWAYS: • abide by the indications and instructions contained in the User Instructions and check their integrity; • use the Bubbler only for the purpose it was designed for (*see Chap. 1*); • correctly position the fastening accessories of the bubbler to the cabinet; • during the lifting and handling phases of the bubbler, handle slowly and safely; • work in areas with adequate lighting and good visibility of the load to be handled; • work outside the maneuvering range of the raised load; • avoid, as much as possible, sudden, jerky movements in quick succession; • avoid manoeuvring with sudden, jerky movements and at quick speed (>8m/min.); • report any anomalies to the Head of Department; • check the integrity and condition of wear of the various Bubbler parts.

2.8 WHAT NOT TO DO !

Improper use, forbidden use, foreseeable improper use.

Use of the Bubbler for forbidden manoeuvres, improper use and lack of maintenance can cause serious danger to the health and safety of the operator and persons at risk, as well as damages to the work environment.

The actions described below, which obviously cannot cover the entire range of potential possibilities of "inappropriate use" of the Bubbler, are in any case actions considered "reasonably" most foreseeable, which are strictly forbidden and therefore:

DANGER

NEVER:

- attempt to lift the Bubbler load unbalanced, unstable or using gripping equipment not positioned in the barycentre;
- move or remain under the actual load during the lifting phase;
- leave the load suspended in the air or unmanned during the lifting and handling phase;
- make sudden reverse movements during handling;
- heat the structure of the Bubbler nor its components with an Oxyhydrogen flame or other heat sources;
- allow use of the Bubbler, to unskilled personnel or persons under the age of 16;
- use the Bubbler if not psychophysically suitable;
- weld on the Bubbler nor intervene with the safety guards welded;
- work in areas in which the use of non-sparking tools are required or in the presence of strong electromagnetic fields;
- modify the functional/performance characteristics;
- carry out temporary repairs or resetting interventions that do not comply with that stated in this Instruction Manual;
- not use not original spare parts or spare parts not recommended by LPE;
- assign maintenance and repair operations to personnel not trained by LPE;
- abandon the Bubbler at the end of the work without having implemented the relevant safety procedures;
- use unsuitable means, equipment, tools during the maintenance phases as stated in this Instruction Manual;
- use naked flames near the Bubbler.

3. SYSTEM DESCRIPTION AND TECHNICAL INFORMATION

Contents of this Section

3.1 SYSTEM DESCRIPTION - 20

3.2 AUTOMATIC REFILLING - 20

3.3 TECHNICAL INFORMATION - 21

3.3.1 Models 21

3.3.2 Construction 21

3.3.3 Services & connections 22

3.3.4 Dimension and weight 22

3.3.5 Features. 22

3.2.6 Component list. 24

3.1 SYSTEM DESCRIPTION

The Bubbler is a vessel containing a specific low-boiling chemical liquid (Chlorosilanes).

The carrier gas passing through the liquid is saturated by the latter, and then sent to the reaction chamber.

The Bubbler is filled with approx. 70% liquid Chlorosilane, while the vapour (MIX) fills the remaining volume.

Some particular characteristics as example:

- the water jacket with its large surface of heat exchange provides good stability of the liquid temperature.
- the automatic refilling of the liquid.

guarantee an excellent process reliability in epitaxial growth.

Application notes:

- Standard model (14 litres capacity) is designed for high growth speed (20-60 GPM Chlorosilane and over 25 slm carrier) and long deposition process.
- Minispeed model (4 litres capacity) is better used in low and very low growth speed (2-15 GPM Chlorosilane, 8 slm carrier) because of low dead vapour volume and faster stabilization.

3.2 AUTOMATIC REFILLING

The liquid level is controlled by the level sensor located inside of the Bubbler.

When the liquid level decreases, the Reactor will provide to refill the Bubbler opening the VBBL valve (*See Section 9*) until the level is restored. The latter is connected at the main chlorosilane tank that should be pressurized with a working pressure about 2 bar.

A separate safety level sensor shuts the pneumatic valve in case of malfunction of the main sensor and activates an acoustic alarm.

Furthermore, in case the refilling level is not reached in about 2 minutes, because the main tank is empty, an acoustic alarm will warn the operator.

NOTE: if the Bubbler is connected to one LPE Epitaxial Reactor, the Control Box is not necessary because the refilling function is performed by the Epitaxial Reactor.

⚠	**WARNING**
	The refilling of liquid is anyway recommended after completion of the deposition process, in order to not perturb the saturation parameters during deposition.

Manual valves are also installed for line shut-off and for by-pass/purge.

i	**NOTE**
	It is recommended to install a purge system panel for purging the Bubbler.

3.3 TECHNICAL INFORMATION

3.3.1 Models

- MINISPEED MODEL (mini) - 4 liters - P/N 16G701.
- STANDARD MODEL (std) - 14 liters - P/N 16G702

3.3.2 Construction

3.3.2.1 Vessel

	mini	std
Material:	EN 10216-5 1.4404 (AISI 316L), TIG welding.	
Chlorosilane wetted surface:	electropolished	
Working pressure:	2 bar (Maximum allowable pressure - PS=9.5 bar)	2 bar (Maximum allowable pressure - PS=10 bar)
Proof pressure:	14 bar	19 bar
Maximun allowable temperature:	50 °C	
Minimum allowable temperature:	-20 °C	
Corrosion allowance:	0.5 mm	

3.3.2.2 Water jacket

	mini	std
Material:	EN 10217-7 1.4307 (AISI 304L), TIG welding.	
Working pressure:	0.34 bar (Maximum allowable pressure - PS=1 bar)	0.34 bar (Maximum allowable pressure - PS=1 bar)
Proof pressure:	1.5 bar	1.5 bar
Maximun allowable temperature:	50 °C	
Minimum allowable temperature:	-20 °C	
Insulation (external):	Poliuretanic foam, closed cell, thickness = 10 mm.	

3.3.2.3 Inside tubing

AISI 316L - electropolished - Ø1/4 in.

3.3.2.4 Level sensors

Welded inside the vessel.
Floating/magnetic type.
Refill level sensor & alarm level sensor: normally closed (switch off at level).
Cable length to connector: 1.5 meters (connector counterpiece supplied).

3.3.2.5 Valves group

Mounted on bubbler top

Manual valves:	manual valve, AISI 316.
Pneumatic valve:	diaphragm valve, normally closed - AISI 316.
Gas & liquid connections:	VCR 1/4”.
Welding:	Orbital welding.

3.3.3 Services & connections

3.3.3.1 Water supply to bubbler

Connections: 1/2 ‟ BSP.
Flow: 5 - 15 l/min.
Pressure: 0,34 bar.
Temperature: 17 - 20 °C - (depending on process) - stability +/- 1°C.

3.3.3.2 Gas connection and tubing

VCR type, face seal - male/female.
Tubes H2 and Mix: 1/4 ‟ st.st. connected to reactor.
Liquid Chlorosilane: 1/4 ‟ st.st. connected to main drum.
coaxial line recommended for liquid chlorosilane.

Pneumatics: 1/8” plastic tube, connected to Control Box - 5 meters supplied.

3.3.3.3 Level sensor

see schemes RH4667U1 or RH4667U2 and RE4196U1 in the *Section 9*.

3.3.4 Dimension and weight

Model	overall (mm)	inside (mm)	weight Kg (empty)
Standard (std)	210 x 210 x 1250 h	dia. 155 x 990	34
Minispeed (mini)	160 x 160 x 1250 h	h. dia 83 x 990	16

3.3.5 Features

3.2.5.1 Fluid

Chlorosilane:

- TCS: trichlorosilane ($SiHCl_3$).
- TET: tetrachlorosilane ($SiCl_4$)

i	**NOTE**
	in the conditions of use there is no endothermic reaction.

3.2.5.2 Chlorosilane capacity

At refill level (figures approximate depending on level sensor):

	std - TET	std - TCS	mini - TET	mini - TCS
l (litre)	14.3	14.3	4.15	4.15
kg	21	19	6	5.5

3.2.5.3 Liquid level variation

In the Table the measurement of chlorosilane output:

	std - TET	std - TCS	mini - TET	mini - TCS
mm/g	0.0353	0.0387	0.1228	0.1346

Example: process requires 28.0 g/min TET for 15 min (+ 1 min pre-purge) - Bubbler std Model .

Level decrease at the end of process will be ==> 0.0353 x 28 x 16 = 15.8 mm.

3.2.6 Component list

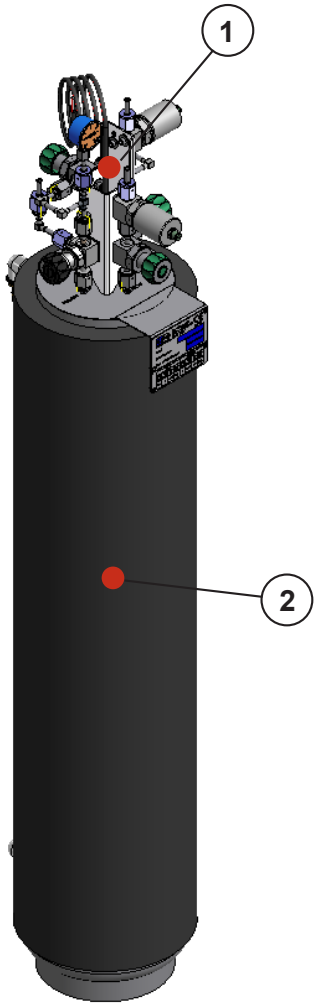

fig. 3.2

Ref	Item	Description
1	GAS VALVES GROUP	Assembly of adjustment valves.
2	BOTTLE	Liquid and Gas bottle.

4. CONTROL DEVICES

Contents of this Section

4.1 INTRODUCTION - 26

4.2 VALVES GROUP - 26

4.1 INTRODUCTION

Here follows the description of the valves group for controlling the Bubbler.

The valves group shown is the standard group or, in any case, the most complete. Each control, even if located in a different position to the one shown, always has the same written function.

4.2 VALVES GROUP

	MANDATORY
	Open *Section 9*

	NOTE
	To adjust, turn the regulators to the right to increase the pressure or to the left to decrease the pressure. Check the pressure value on the pressure gauge positioned above or near each regulator.

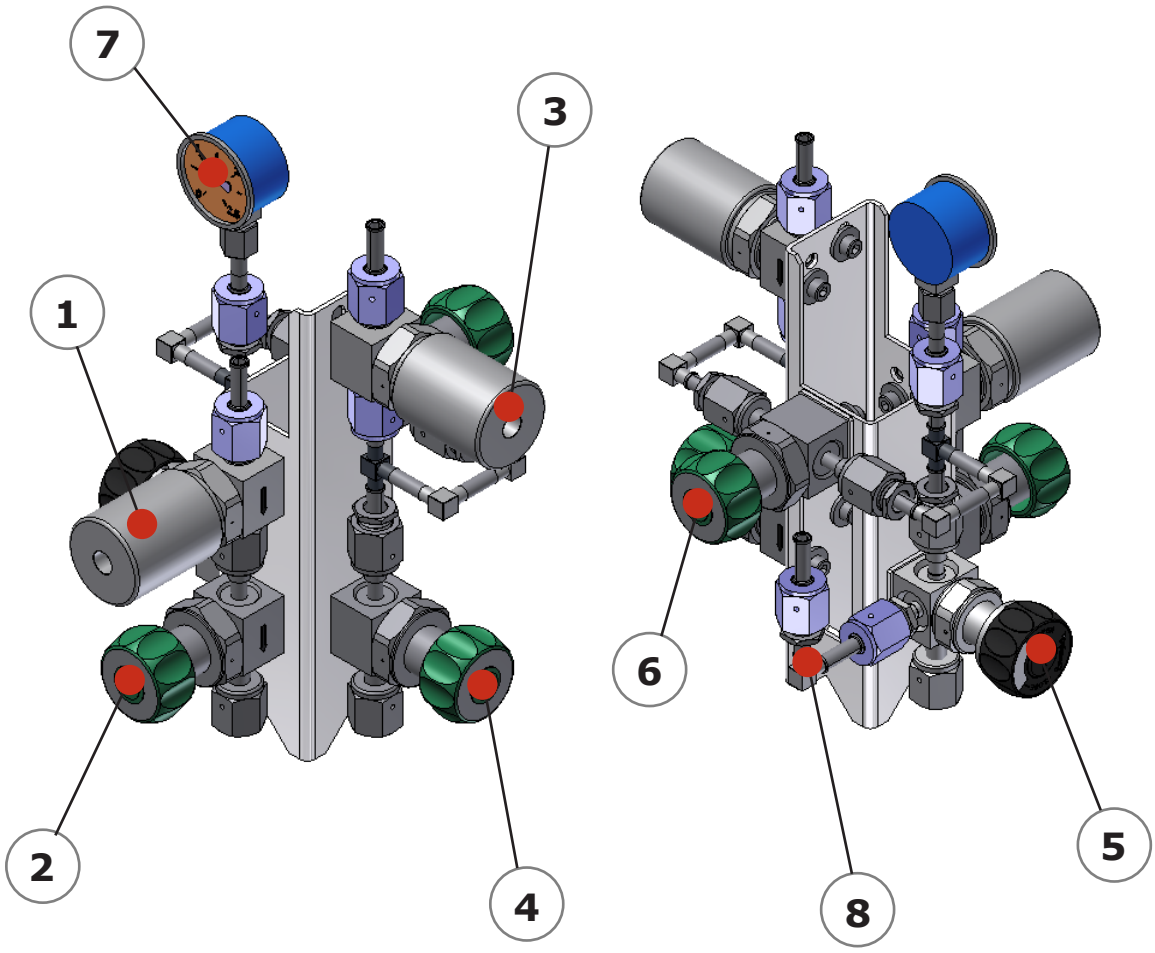

REF.	CONTROL DESCRIPTION
1	LTCS PNEUMATIC VALVE
2	LTCS MANUAL VALVE
3	H2 PNEUMATIC VALVE
4	H2 MANUAL VALVE
5	MIX MANUAL VALVE
6	BYPASS VALVE HYDROGEN+MIX
7	PRESSURE GAUGE Only installed for transport. To disassemble and store. Connect to the customer's plant line.
8	RUPTURE DISK CONNECTION Before connect the scrubber line, replace the blind gasket with the rupture disk.

fig. 4.1

This page has been left blank intentionally

5. HANDLING AND INSTALLATION

Contents of this Section

5.1 INTRODUCTION - 30

5.2 HANDLING THE PACKAGED BUBBLER - - - - - - - - - - - - - - - - - - - 35

5.2.1 Handling the crates with a fork lift truck 37

5.2.2 Handling the crates with a bridge crane and cables 38

5.2.3 Handling with a fork truck 39

5.3 NOTES AFTER HANDLING, BEFORE THE CONNECTIONS - - - - - - - - - 40

5.4 DISPOSAL OF PACKAGING - 40

5.5 INSTALLATION PREPARATIONS - 41

5.6 INSTALLATION - 43

5.6.1 Positioning. 43

5.6.2 Connections 44

5.6.3 First bubbler filling 46

5.1 INTRODUCTION

CAUTION

Danger of crushing, collisions, abrasions and cuts. Personnel assigned with handling the product must read the Safety Requirements at the beginning of this manual (*Section 2*), wear work overalls, protective gloves, protective shoes and helmet.

CAUTION

Always handle the Bubbler as explained in this section; in any case never sling the product as shown in the figure or on the projecting parts (*fig 5.1*).

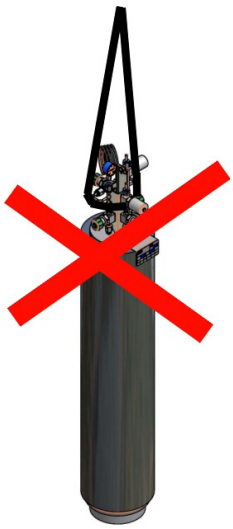

fig. 5.1

The following pages describe how to behave in all the cases listed.

1. As a rule and as per the contract, an LPE Engineer should always be present upon arrival of the packaged items. The instructions in *Section 5* should be used as a note if handling parts of the packaged Bubbler, unpacking and transporting unpacked Bubbler parts is carried out without the supervision of the Engineer is question.
2. Before positioning all the product parts, make sure that the surface on which they are placed and all the connections comply with the specifications forwarded previously.

3. As, during assembly, it may be necessary to access high parts always use a suitable safety ladder (*fig. 5.2*)

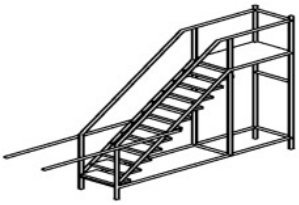

fig. 5.2

4. If using metallic cables or chains also for slinging, remember during handling to protect painted and machined parts with cardboard, wood or cloths (*fig. 5.3*).

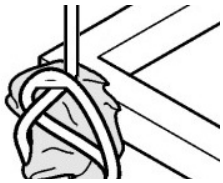

fig. 5.3

5. When handling, the person assigned to operate the means of transport must ensure that NOBODY IS NEAR THE BUBBLER AND CABINET. Activities of lifting, handling and unpacking the unit should be entrusted exclusively to personnel expert in this type of work (fork lift truck drivers or crane operators) (*fig. 5.4*).

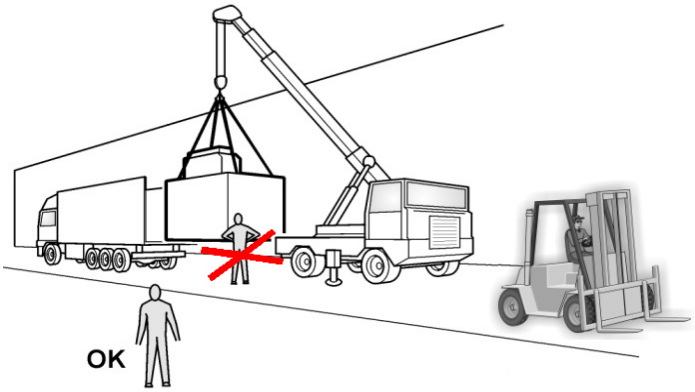

Fig. 5.4

	CAUTION
	Danger of falling and/or tripping and crushing. Position barriers or, in some form, prevent access to all personnel unauthorised to carry out handling operations or unaware of the dangers connected to this phase. NEVER REMOVE THE BARRIERS UNTIL THE POSITIONING AND FASTENING OPERATIONS OF THE UNITS HAVE BEEN COMPLETED (*fig. 5.5*).

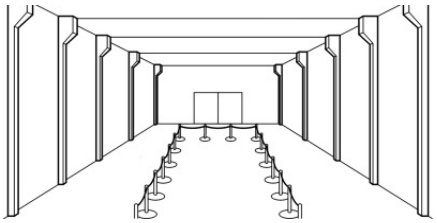

Fig. 5.5

6. As a rule, LPE shall supply the Bubbler inside containers or crates.

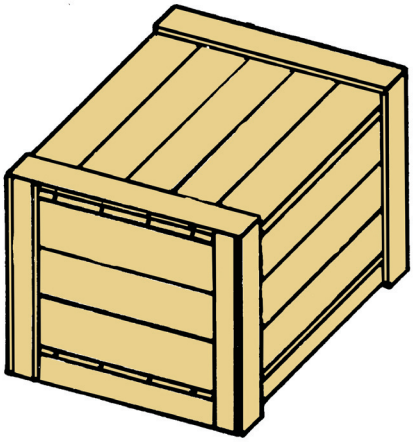

fig. 5.6

7. Clean the area bordering the installation area of the Bubbler, to prevent slipping, tripping or falling.

	CAUTION
	Danger of crushing. The various components, inside the containers and crates, for transport reasons, are secured and spaced with wooden elements. These connections (iron wires and battens) and the linings should not be removed upon opening the top of the containers and crates. There is a danger of crushing due to loads moving.

8. These connections should be removed when removing each component. For this reason, the person in charge of removal and slinging activities of components must wear protective shoes, gloves and helmet and work with utmost care and attention.
9. The Bubbler can be handled when packed, according to circumstances, with cables or chains, fork lift trucks, brackets, eyebolts, bridge cranes, or other means as described in the following chapters.
10. Handling the unpacked Bubbler is permitted only using a fork lift truck or transpallet, as described in the following chapters.

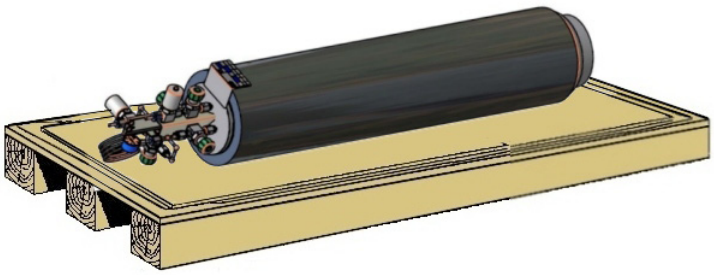

fig. 5.7

11. The Bubbler is designed to operate in a clean room. Therefore, the environment conditions for its processing must comply with the laws in force. If installed inside an industrial building, the building must be well lit and have a solid and level floor.

12. The work areas must be fitted with devices that provide artificial lighting for protect the health and safety of workers. Lighting in the rooms must comply with the laws in force in the country in which the cabinet is installed and must, in any case:
    - be uniform and guarantee good visibility throughout the rooms;
    - not create dangerous reflections;
    - enable, as much as possible, maintenance interventions specified in this manual to be carried out safely.
13. The flooring should be sufficiently level and capable of supporting the Bubbler and Cabinet (*fig. 5.8*). See packing list for weight details.

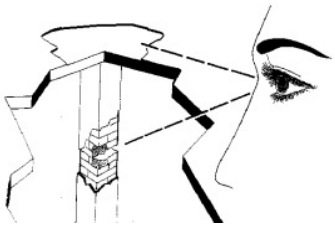

fig. 5.8

14. Ensure there is sufficient space for maintenance interventions. The Bubbler and / or cabinet should be installed according to the indications shown in the layout attached to *Section 9*.

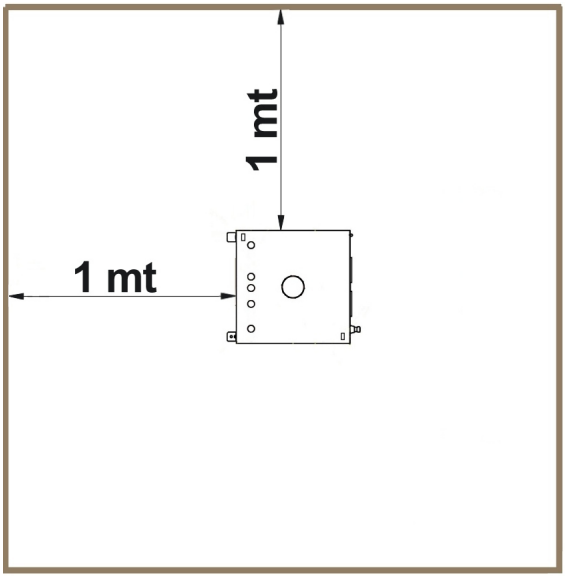

fig. 5.9

i	**NOTE**
	LPE S.p.A. recommends these as minimum spaces for maintenance interventions.

15. The Cabinet, with Bubbler, should not be installed immediately near a thoroughfare area (especially of people).

16. The work area should never be occupied, so that, NOTHING AND NOBODY interferes with the free movement of the operator.

	FORBIDDEN Access to the work area is forbidden to unauthorised persons not directly assigned with operating the product. This prohibition is necessary to prevent dangers due to carelessness or negligence whilst working. The operator is therefore advised to always keep the work area free from any equipment and forbid access to unauthorised personnel, in order to obtain the ideal safety conditions to operate the Bubbler.

IF THESE CONDITIONS DO NOT EXIST, ARRANGE SAID CONDITIONS PRIOR TO INSTALLATION.

5.2 HANDLING THE PACKAGED BUBBLER

When delivered packaged, the Bubbler may be in a crate **[1]** or on a pallet **[2]** (*fig 5.10*).

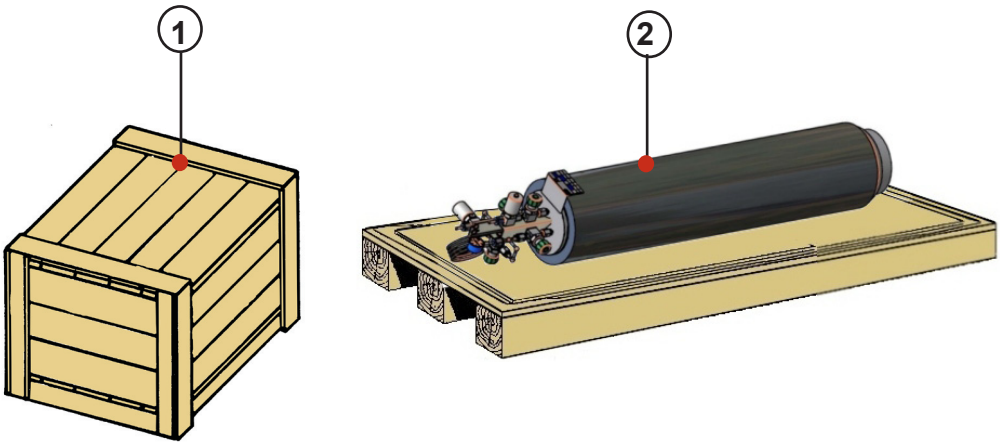

fig. 5.10

	MANDATORY
	To handle the crates with fork lift trucks, follow the instructions described in *point 5.2.2*; to handle the crates using a bridge crane or cables, follow the instructions in *point 5.2.3*

	CAUTION
	If not unpacked immediately, store in a dry and covered area (*fig. 5.11*)

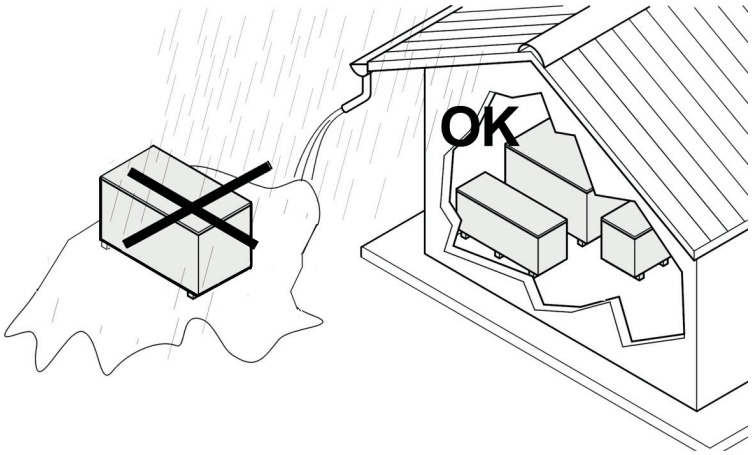

fig. 5.11

i	**NOTE** The necessary handling instructions are affixed to the outside of the packaging (*fig. 5.12*).

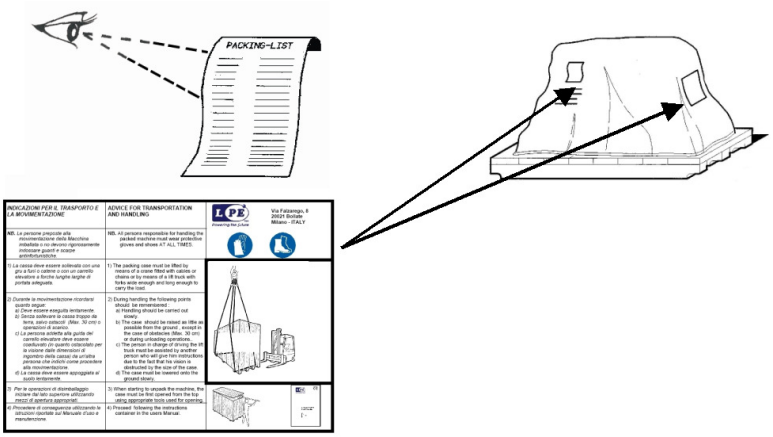

fig. 5.12

5.2.1 Handling the crates with a fork lift truck

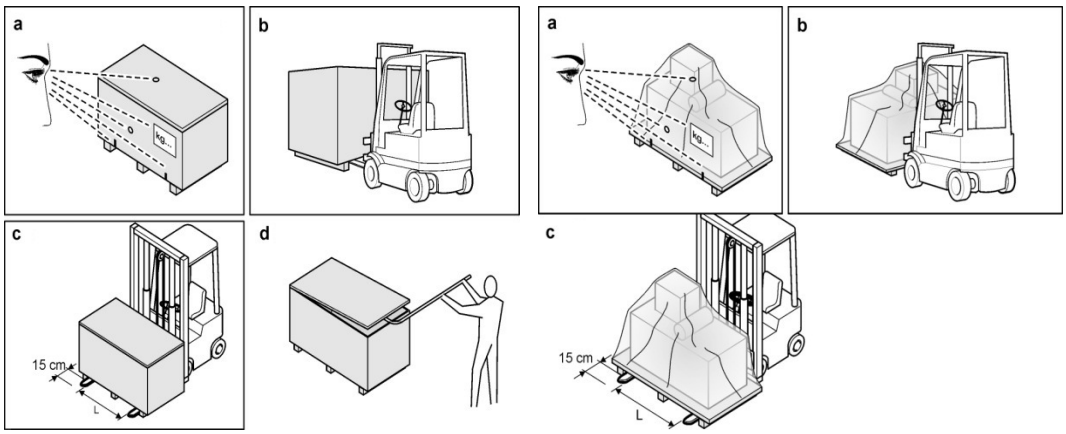

fig. 5.13

When handling the crates with the aid of a fork lift truck, referring to the above figure and proceed as indicated below:

1. abide by the instructions on the crate (especially the position of the forks and the barycentre): note that the position of the forks is the widest possible **[a]** (*fig. 7.14*)

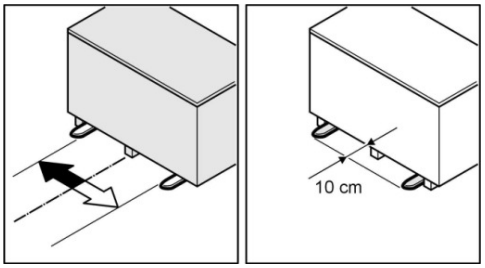

fig. 5.14

2. use a fork lift truck of adequate capacity; the forks should project from the crate by at least 10 cm. **[b]**
3. slowly move the crate, at a minimum height from the ground (max. 20 cm), assisted by a helper if vision is hindered.
4. position delicately on the ground **[c]**
5. to open the crate, use appropriate equipment (crowbar for example), starting from the lid **[d]**.

5.2.2 Handling the crates with a bridge crane and cables

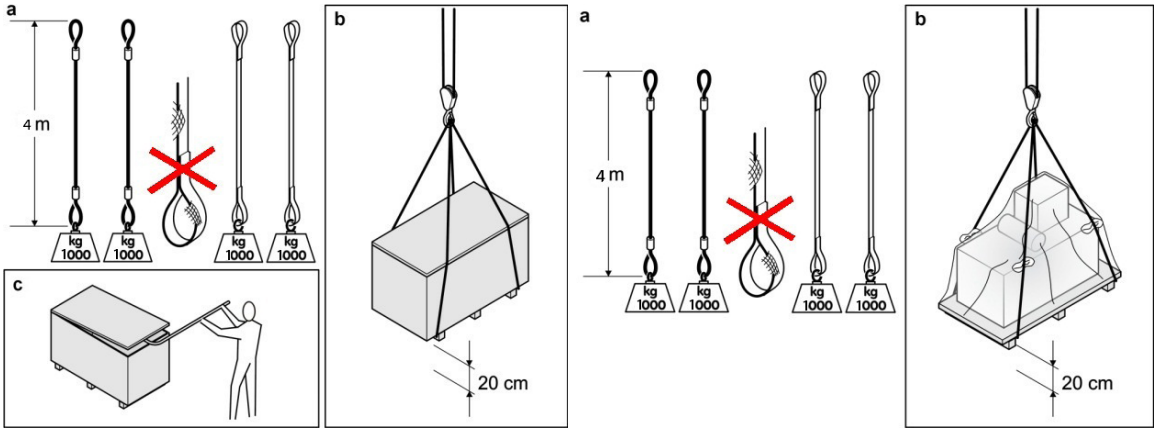

fig. 5.15

When handling the crates with a bridge crane and cables, refer to the figure above (*fig. 5.15*), and proceed as indicated below:

1. use two cables or chains of a minimum length of 4 m and minimum capacity of 1,000 kg each, using the eyelets at either end that should show no signs of wear **[a];**
2. sling the crate following the instructions shown on the outside (position of the cables, barycentre and weight) **[b];**
3. slowly move the crate, at a minimum height from the ground (max. 20cm), assisted by a helper if vision is hindered **[c];**
4. position delicately on the ground **[d];**
5. to open the crate, use appropriate equipment (crowbar for example), starting from the lid **[e]**.

5.2.3 Handling with a fork truck

When moving the machine with the aid of a lift truck with long and wide forks, proceed as indicated below:

a. abide by the instructions on the packaging (especially the position of the forks and the barycentre): note that the position of the forks is the widest possible (L);

b. use a lift truck with long and large forks of adequate capacity;

c. the forks should project from the crate by at least 15 cm.;

d. slowly move the pallet, at a minimum height from the ground (max. 20cm), assisted by a helper if vision is hindered;

e. position delicately on the ground (*fig. 5.16*).

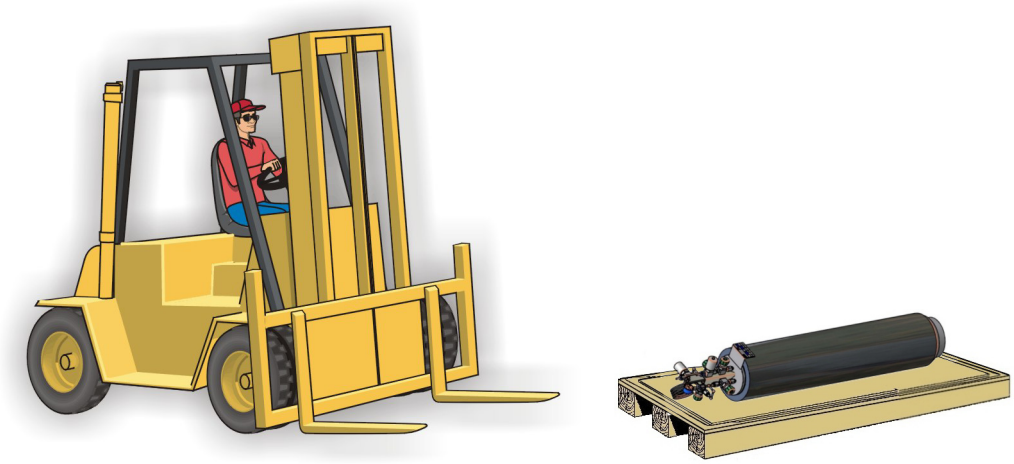

fig. 5.16

5.3 NOTES AFTER HANDLING, BEFORE THE CONNECTIONS

Once the handling of the cabinet is complete and all the necessary parts are positioned near the installation site, wait for the LPE Engineer to carry out all the checks before installation.

5.4 DISPOSAL OF PACKAGING

The disposal of waste packaging materials should be carried out in compliance with the regulations in force in the User's country, taking into consideration the nature of the materials:

- *straps, nails and metallic parts;*
- *wooden planks and plywood;*
- *plastic materials (protective sheeting, moisture barrier bags).*

i	**NOTE**
	Dispose of packaging responsibly. (*fig. 5.17*).

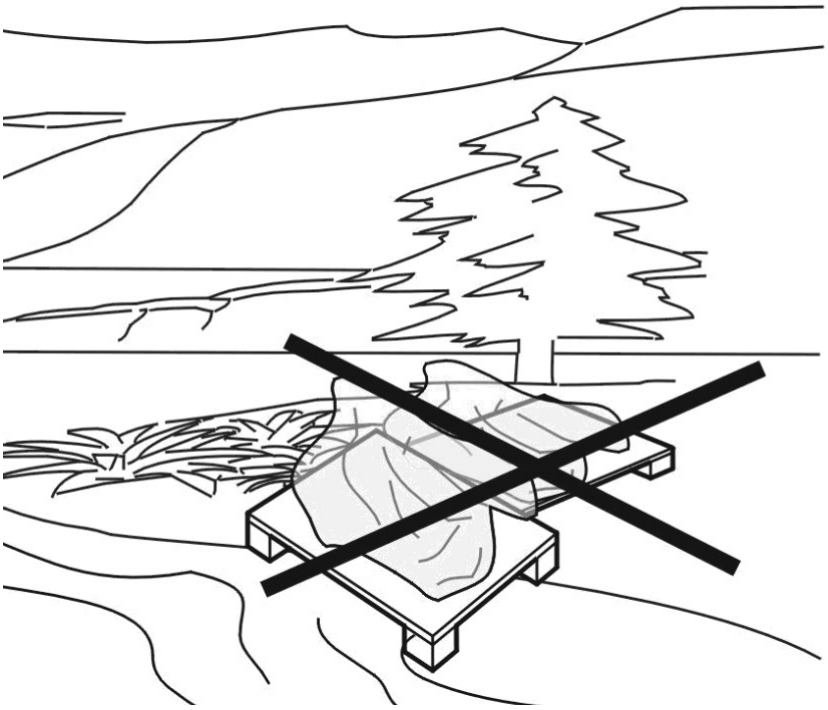

fig. 5.17

5.5 INSTALLATION PREPARATIONS

Follow the instructions in document "INSTALLATION SPECIFICATION" forwarded prior to shipping the Bubbler.

	CAUTION
	If these conditions do not exist, arrange said conditions prior to installation.

WARNING

BEFORE CONNECTING THE BUBBLER, READ and ABIDE BY the following PRE-INSTALLATION INSTRUCTIONS

ALL MODELS

The Bubbler and the valves are tested according LPE specifications, which include, as the final step, the pressurization with H2 at 6 bar for 24 hours; results are reported in the QC Certification.

For safety, transport and cleanliness reasons, the Bubbler is flushed with filtered N2 and pressurized with N2 at approximately 1 bar (*fig.5.18*), shown on the pressure gauge installed on Bubbler, and then the valves are closed and locked with a plastic strip.

	NOTE
	Due to temperature changes and/or lengthy storage, the pressure shown at installation may vary +/- 0.25 bar.

fig. 5.18

	NOTE
	If any problems occur (leakages, damages, incorrect valve opening, incorrect Bubbler connection procedure), the pressure shown will be out of the range stated. This should be immediately reported to LPE, BEFORE CONNECTING the Bubbler.

For this, we suggest the following check procedure, before installation of the Bubbler and connection to the lines.

1. Check the pressure gauge VCR securely tightened.
2. Check and mark the pressure shown on pressure gauge.
3. Check that all plastic strips on the valves are intact and the Bubbler shows no signs of damage due to drops, removal of connections or other tampering.
4. Remove the plastic strip from the valve VBBL connected to the pressure gauge and turn to open the valve.
5. Watch the pressure shown and compare with the one at point 1.
6. **It should be either:**
   a. the pressure difference over 0.25 bar.
   b. the Bubbler final pressure below 0.4 bar.

report this to LPE and DO NOT connect the Bubbler to the chlorosilane line

7 - If the test is passed, turn to close the valve and proceed to connect the lines, removing the pressure gauge and the counter pieces of the 2 other VCR connections.

i	**NOTE** It is recommended to take away a potential moisture residual in the Bubbler by flushing with nitrogen gas (purity grade 5.0) at 20 slm for 2 hours before the final connection.

!	**WARNING** Gaskets installed on the VCR connections to the lines are made of nylon, simply for delivery purpose and are blind (undrilled) gaskets. These 3 gaskets MUST BE DISCARDED AND REPLACED with the metal gaskets supplied (Cajon model SS-4-VCR-2 or equivalent size).

i	**NOTE** Failure to abide by these procedures, cancels the warranty contract.

5.6 INSTALLATION

5.6.1 Positioning

	FORBIDDEN
	Positioning and connecting the Bubbler should only be carried out by the customer's Engineers specially trained for this type of intervention or by LPE Engineers. It is forbidden for other Engineers to carry out these interventions.

	WARNING
	FIRE HAZARD

When in operation, the system contains H2 (flammable and exploding materials) and chlorosilane that can generate HCl fumes in the event of leakages.

The Bubbler must be enclosed into a degassing cabinet of adequate size in order to easily operate the manual valves and sensor.

Safety precautions and personal protective equipment are required in case of disconnection and/or maintenance on the valve group.

Use an appropriate trolley for moving the product.

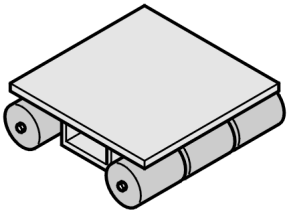

fig. 5.19

5.6.2 Connections

	CAUTION
	These operations should only be carried out by Engineers of LPE. The Engineer should ensure that, whilst making the connections, nobody remains in the area surrounding the Bubbler and near energy sources.

	WARNING
	Before any operation make sure to read and understand the diagrams and the attachments listed in the Sec. 9 - Schemes and Attachments.

	WARNING
	The Bubbler is protected from overpressure by a rupture disc and the its purge line must be connected to the scrubber plant. The rupture disk is supplied with its label that indicate all tecnical data and the PED certificate number. The label must be not removed from the Bubbler for no reason. Do not connect the exit of the overpressure at the same outlet of the purge group of the PE3061D, the quartz chamber may break. After installation all connections must be checked with a leak detector. For the safety requirements, the installation and the maintenance please refer to the Manual provided by the manufacturer.

1. Make the connections with the help of the relevant diagrams.
2. Disassemble the pressure gauge (*fig. 5.20*); store safely for other possible transport occasions, and connect to the plant line.

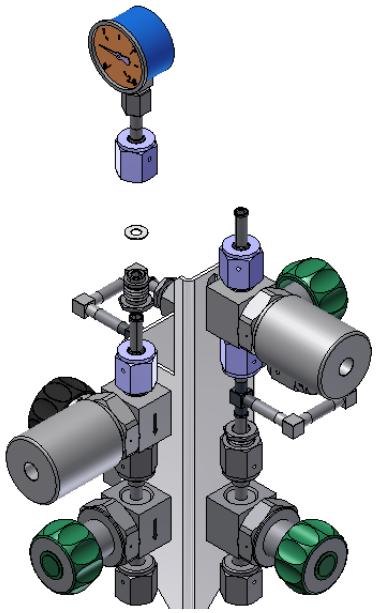

fig. 5.20

3. Using orbital welding, connect the VCR counter pieces supplied with Bubbler to the 4 tubes for:
   - H2 inlet from Reactor.
   - Mix out to Reactor.
   - Liquid Chlorosilane supply line (from tank).
   - "Rupture disk connector" overpressure line (to scrubber plant).

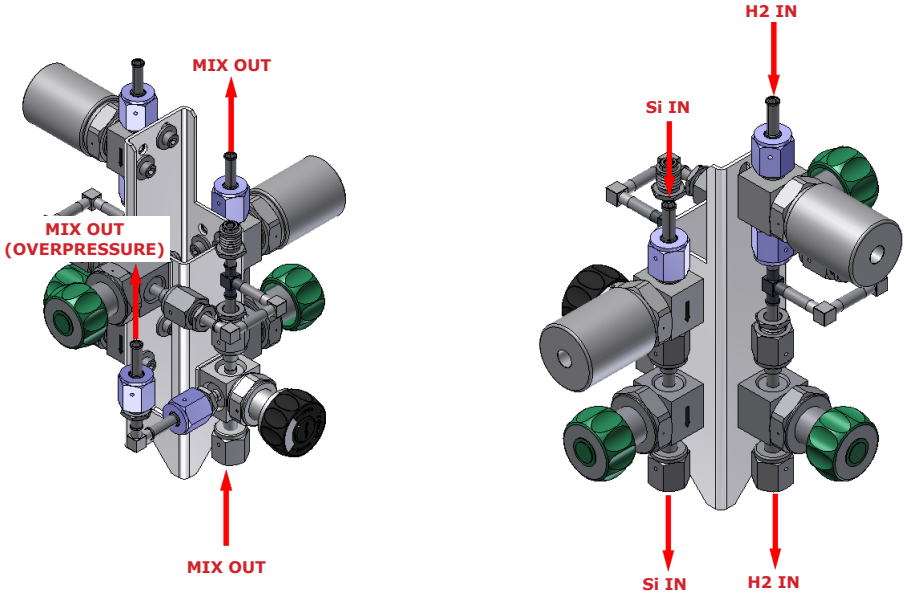

fig. 5.21

4. Ensure to connect correctly the lines following the position shown in the drawings. The connections are also marked on the upper flange of the Bubbler.

5. Replace the three blind nylon gaskets from the VCR connectors (Si IN, H2 IN and MIX OUT) with the correct gaskets (Cajon model SS-4-VCR-2 or equivalent) and tighten properly.

6. Replace the blind gasket SS-4-VCR-BL from the VCR connector (Rupture disk connector) with the correct gasket (Cajon model SS-4-VCR-2 or equivalent) and tighten properly.

	WARNING
	Pay particular attention to service connections in order to avoid gas leaks from the VCR metallic gaskets. Use suitable head wrenches to tighten the parts before securing the services. Apply a lower force on the inferior key in order to avoid torsion to the Bubbler valves.

7. Check the lines and welding for leaks BEFORE opening the manual Bubbler valves.

8. Connect the compressed air supply to the valves.

i	**NOTE**
	when using the Control Box, follow the connections scheme (*See Section 9*).

9. Connect the water supply to the water jacket of the Bubbler and the drain tube set water flow to 5-10 litres per minute.

⚠	**WARNING**
	Use non-sparking tools during installation.

5.6.3 First bubbler filling

i	**NOTE**
	See *Section 3.* See attached layout in the *Section 9*.

1. Open the VB4 (BY-PASS) valve and then purge trough the vent line with H2 for approx. 30 min.

2. Close the VB4 valve.

3. Open the VB1 (H2 IN), VB2 (MIX OUT) valves and then purge trough the vent line with H2 for approx. 120 minutes in order to completely remove the N2 from the Bubbler.

4. Close the VB1 valve and open the VB3 (SIL IN) valve.

i	**NOTE**
	VB2 valve is opened.

5. As previously described in the *Section 3*, an acoustic alarm will warn the operator.

6. Reset the alarm, depressurized the Bubbler trough the vent line and then repeat the operation until the level is reached.

i	**NOTE**
	Depending on the pressure parameters and Bubbler size, it will few times.

7. Open the VB1 valve.

8. The Bubbler is ready to operate.

i	**NOTE**
	Purge through the reactor for 30 min. waiting for the temperature to stabilize before starting the deposition runs.

i	**NOTE**
	for single station - the H2 purge pneumatic valve and the silicon pneumatic valve should be open on the reactor. **for double station** – only the silicon pneumatic valve should be open on the reactor.

This page has been left blank intentionally

6. MAINTENANCE

Contents of this Section

6.1 INTRODUCTION - 48

6.2 PLANNED INSPECTIONS - 48

6.2.1 Every month 48

6.2.2 Every 6 month 48

6.1 INTRODUCTION

	WARNING
	Maintenance must be done by a technician familiar with workplace safety legislation and environmental issues. Do not dump polluting fluids, replaced parts or maintenance waste. Never improvise repairs!

	WARNING
	Inform other operators and persons in the vicinity and prevent access to it. Employ all necessary environmental protection measures (dust, gas, etc.).

The product does not require a particular maintenance, but only inspections.

The inspections planned must be carried out by qualified personnel and is necessary to respect the scheduling.

6.2 PLANNED INSPECTIONS

	WARNING
	Refer to the *Section 2.* Refer to the diagram attached to *Section 9*.

6.2.1 Every month

Check the status of all pneumatic connections. Refer to the *diagram attached to Sesction 9.*

6.2.2 Every 6 month

Check the efficiency of all the safety guards, micro switches and legibility of warning plates of residual risks, prohibitions and obligations.

	NOTE
	Contact LPE immediately in case of the malfunction. In case of need, replace the damaged parts with ones that have equivalent or more level technical characteristics.

7. DISMANTLING AND DISPOSAL OF THE PRODUCT

Contents of this Section

7.1 DISMANTLING - 52

7.2 DISPOSAL - 53

7.1 DISMANTLING

At the end of its working life, the product must be decommissioned, so that it is not used for purposes other than its intended purpose, and to recycle its parts and materials. The following general rules must be applied.

1. The residual gas inside the Bubbler should be purged with inert gas for at least 24 hours and the vessel should be disposed safely to minimize the risk of accident.

   In particular the disconnection of the services must be carried out abiding by the instructions and warnings described in *SECTION 5.*

2. Before dismantling, operators must read and fully understand the Safety Regulations *(SECTION 2)* described at the beginning of this Instruction Manual and use the prescribed personal protective equipment (protective gloves, safety shoes, work overalls, protective gloves, gas mask, etc)

i	**NOTE** When dismantling, separate the different materials.

3. To dismantle the product, CAREFULLY follow the procedure below.
   - Disconnect the service connections:
     - before disconnecting, all lines must be purged with inert gas for at least 24 hours.
   - Disconnect the internal connections:
     - all device connectors;
     - all safety devices
   - Dismantle the frame
4. The company, LPE, **cannot accept responsibility** for any damages to things or people arising from reuse of parts in ways other than the original intended use by LPE.
5. Give back the Bubbler's nameplate (*fig. 7.1*) to LPE.

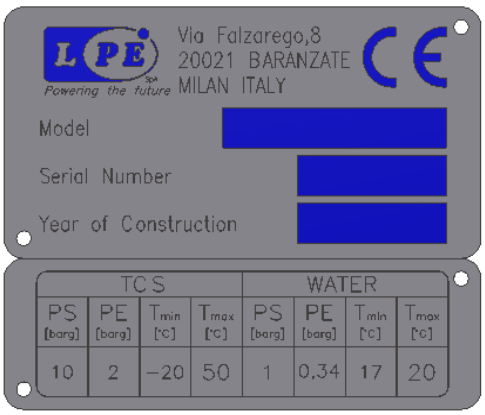

fig. 7.1

7.2 DISPOSAL

After completely dismantling the product, dispose all items at appropriate waste disposal firms. All polluting materials, production wastes, raw materials remnants, etc should be disposed of responsibly (*fig 7.2*).

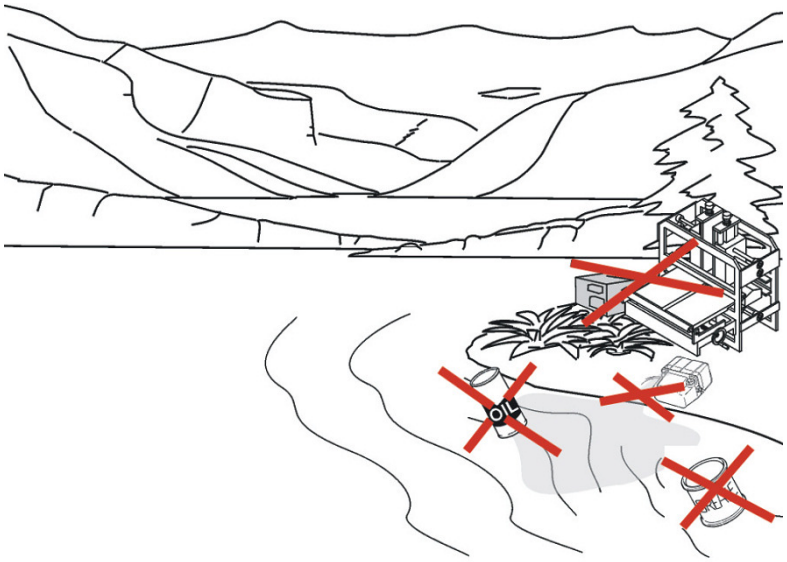

fig 7.2

This page has been left blank intentionally

8. CUSTOMER SERVICE INFORMATION

For information or to request an intervention, please contact LPE S.p.A.

COMPANY NAME	LPE S.p.A.
ADDRESS	Via Falzarego, 8 20021 Baranzate (Milano) Italy
PHONE	++39 02 3834151
FAX	++39 02 38306118
E-MAIL	info@lpe-epi.com
WEBSITE	www.lpe-epi.com
CONTACT	Customer Service Manager Mr. E. Bonanno enzo.bonanno@lpe-epi.com
	Sales Manager Mr. L. Porru luca.porru@lpe-epi.com
	Chief Executive Officer Eng. F. Preti francopreti@lpe-epi.com

This page has been left blank intentionally

9. DIAGRAMS AND ATTACHMENTS

Contents of this Section

9.1. INTRODUCTION - 58
9.2. STANDARD MODEL- 59
9.3. MINISPEED MODEL - 60
9.4. LAYOUT (STANDARD AND MINISPEED MODEL)- - - - - - - - - - - - - 61
9.5. VALVES ASSEMBLY- 62
9.6 CONTROL BOX - CONNECTION SINGLE BELL - - - - - - - - - - - - - 63
9.7 CONTROL BOX - CONNECTION DOUBLE BELL - - - - - - - - - - - - - 64
9.8. CONTROL BOX - PNEUMATIC CONNECTIONS - - - - - - - - - - - - - 65

9.1. INTRODUCTION

This part includes all the documentation enclosed with the delivery of the Bubbler:

- layouts
- diagrams
- drawings

All documents described above are grouped together in a file called ATTACHMENTS.

9.2. STANDARD MODEL

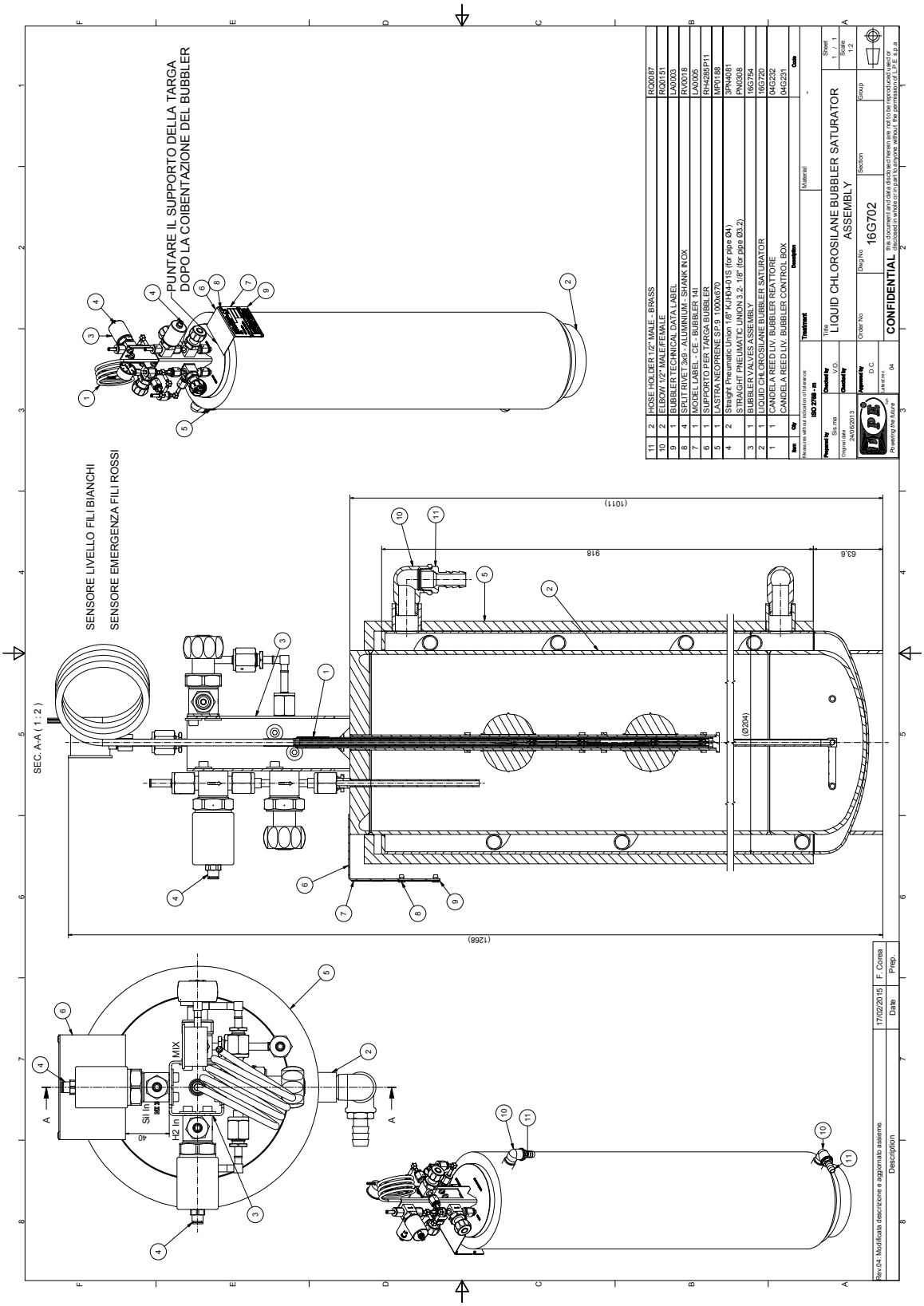

9.3. MINISPEED MODEL

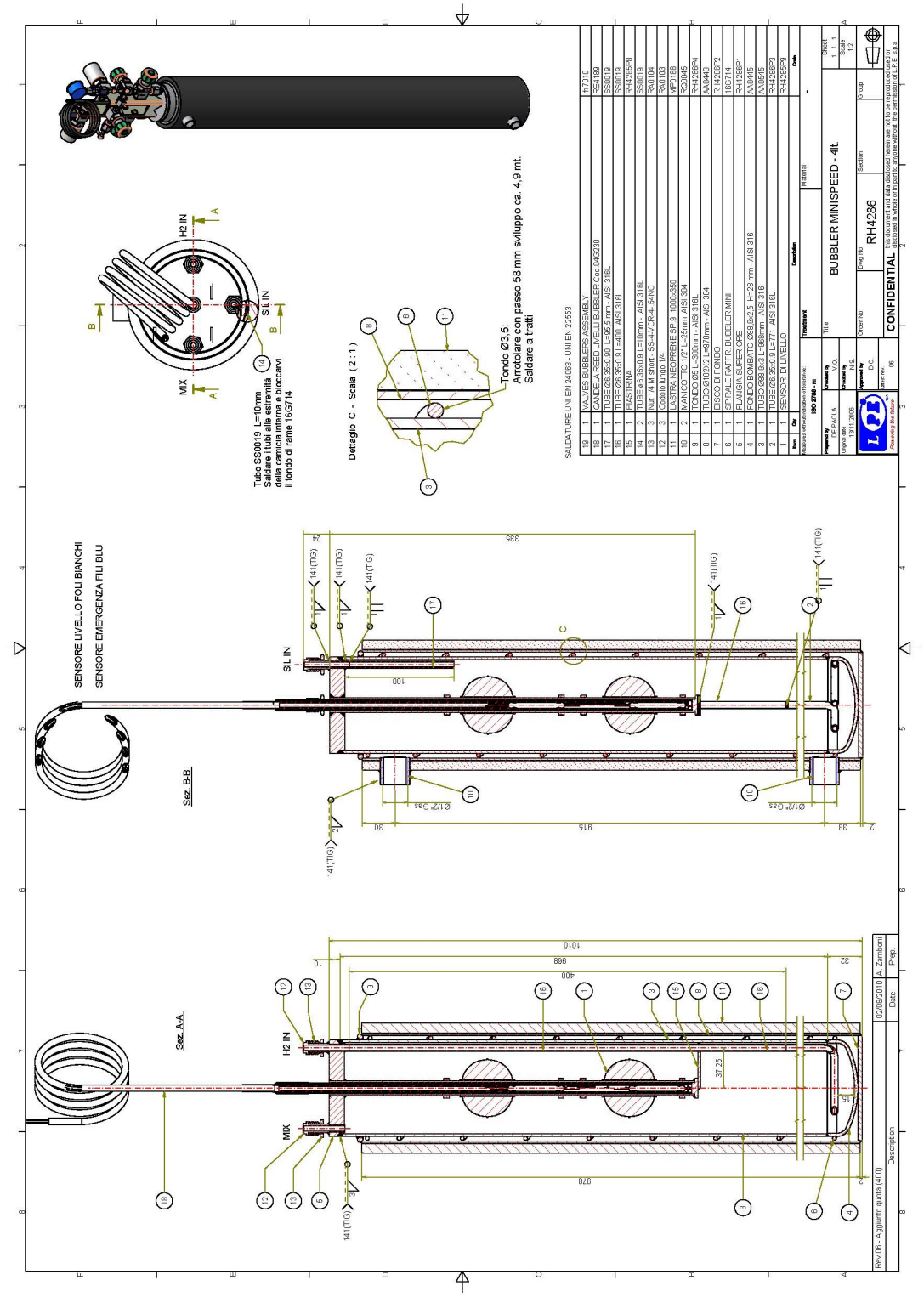

9.4. LAYOUT (STANDARD AND MINISPEED MODEL)

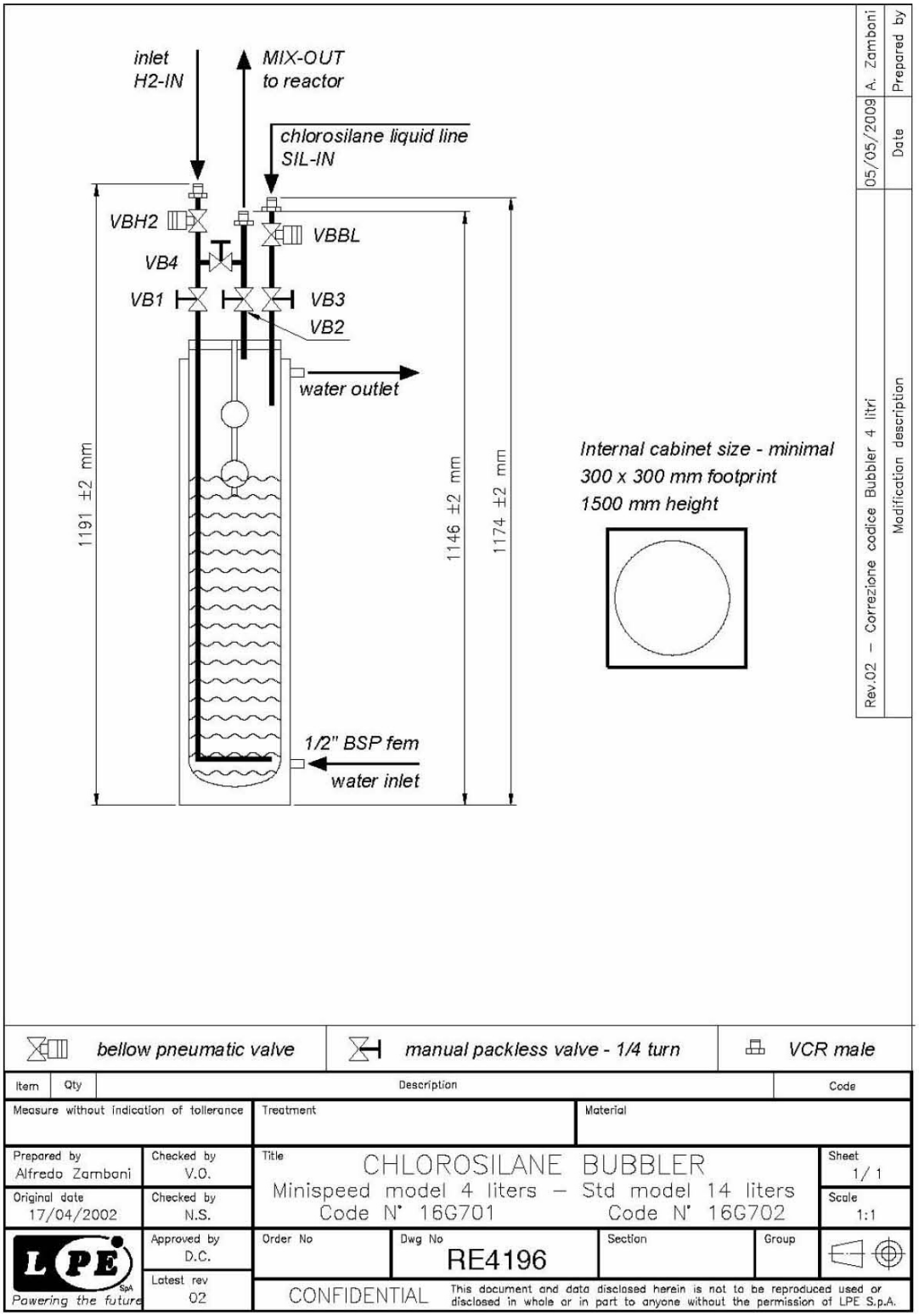

9.5. VALVES ASSEMBLY

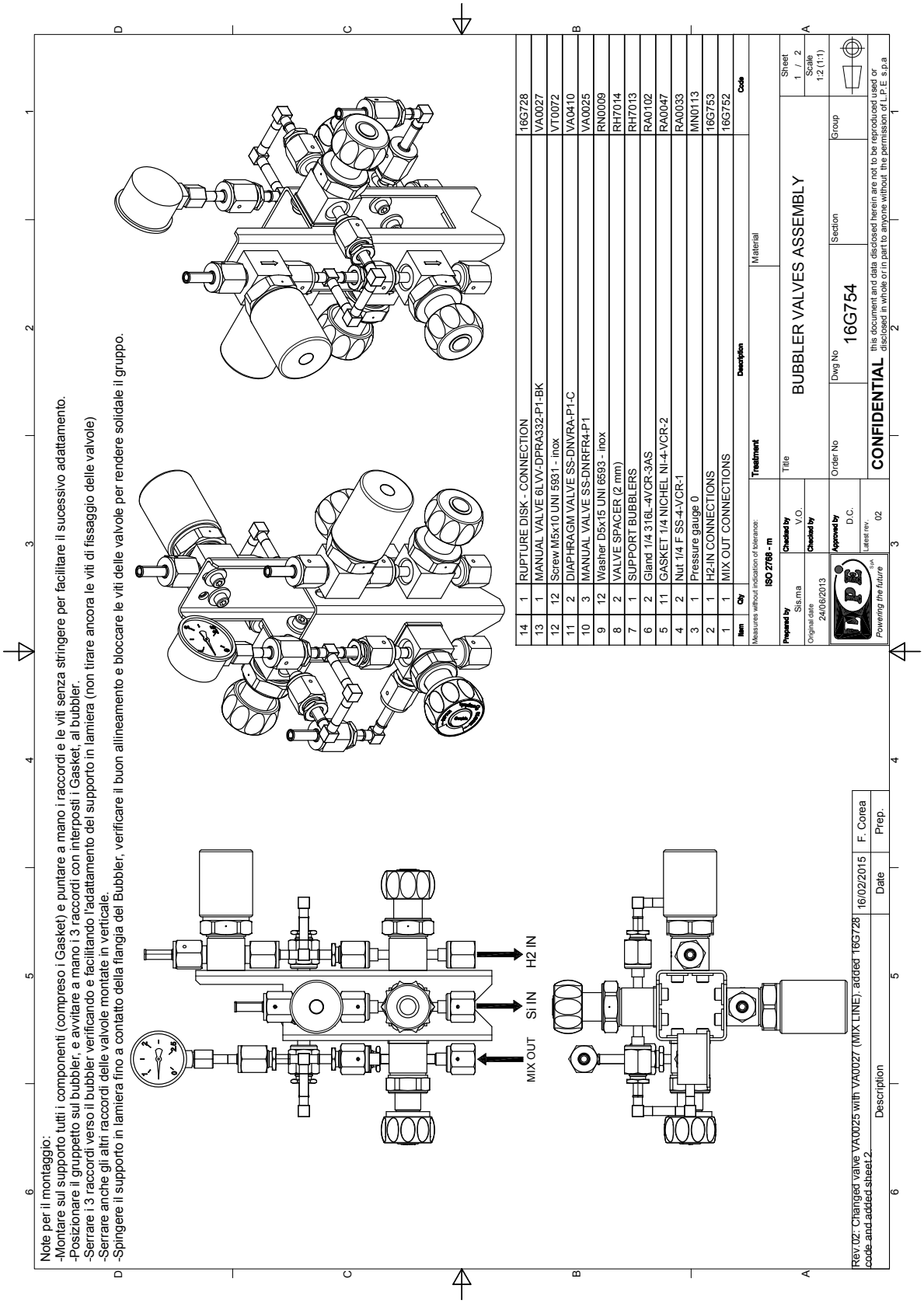

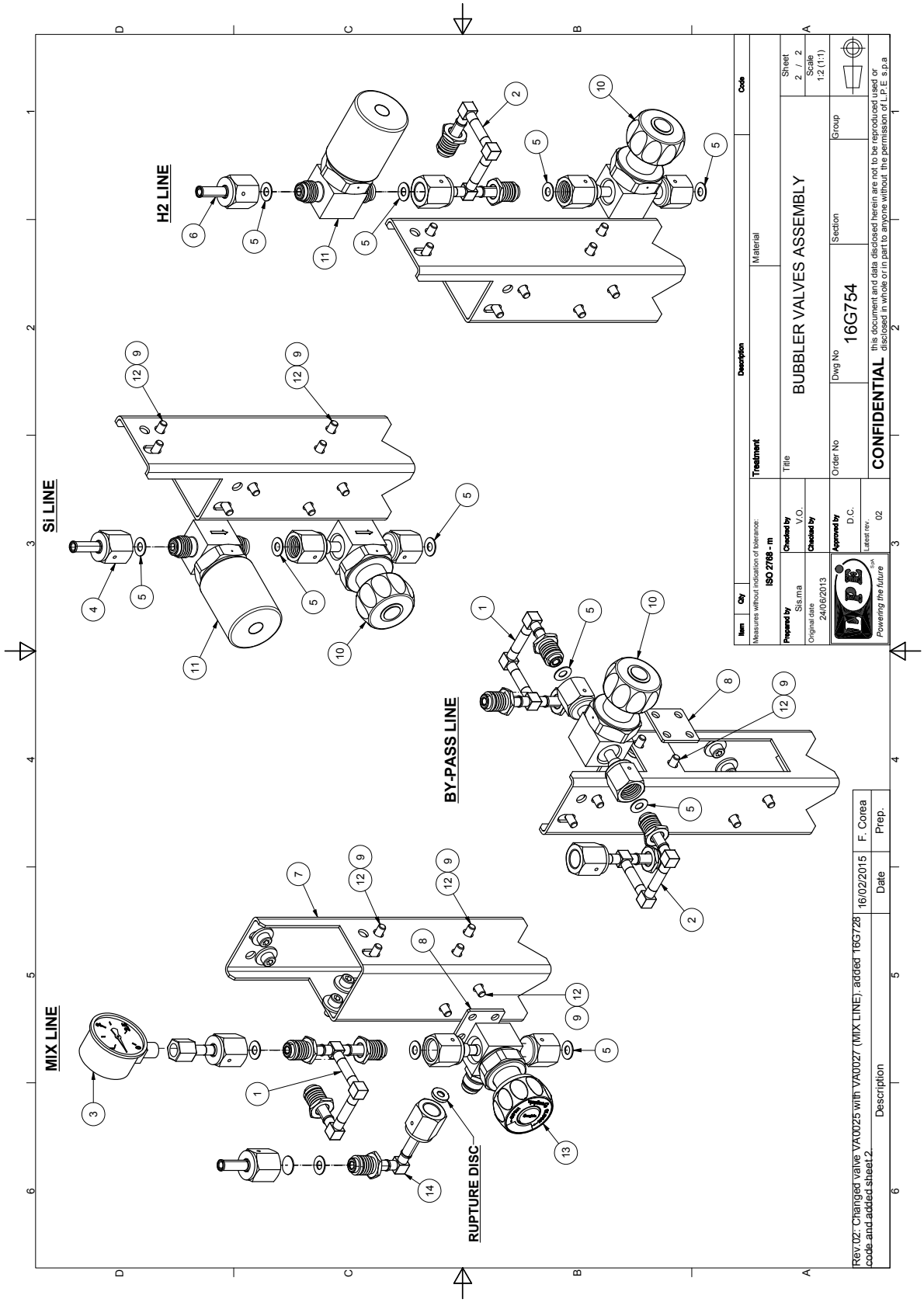
H2 LINE
Si LINE
BY-PASS LINE
MIX LINE
RUPTURE DISC
Item
Qty
Description
Code
Measures without indication of tolerance:
ISO 2768 - m
Treatment
Material
Prepared by
Sis.ma
Checked by
V.O.
Checked by
Original date
24/06/2013
Approved by
D.C.
Latest rev.
02
Title
BUBBLER VALVES ASSEMBLY
Sheet
2 / 2
Scale
1:2 (1:1)
Order No
Dwg No
16G754
Section
Group
CONFIDENTIAL this document and data disclosed herein are not to be reproduced used or disclosed in whole or in part to anyone without the permission of L.P.E. S.p.a
Powering the future
Rev.02: Changed valve VA0025 with VA0027 (MIX LINE); added 16G728 code and added sheet 2
16/02/2015
F. Corea
Date
Prep.
Description

9.6 CONTROL BOX - CONNECTION SINGLE BELL

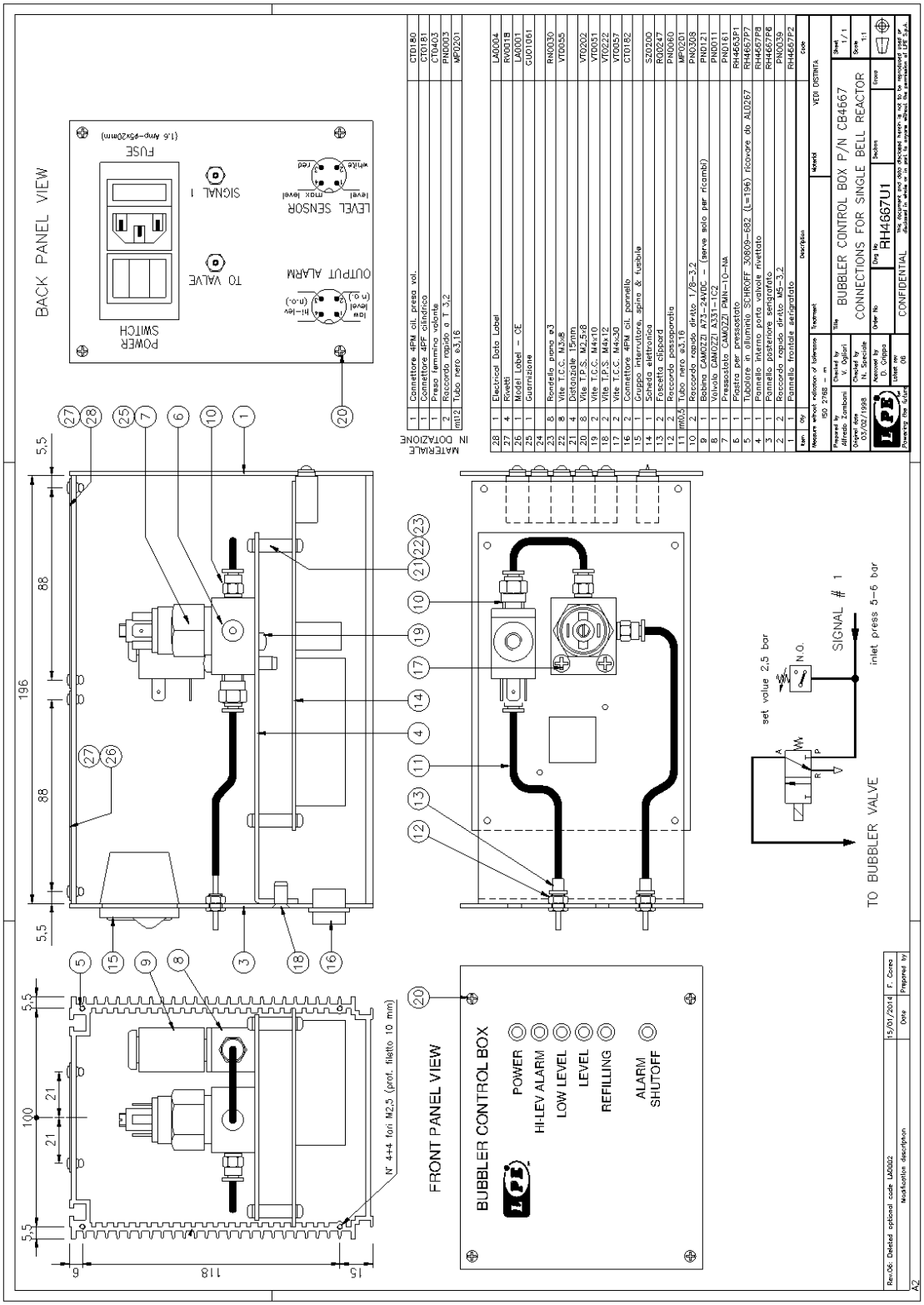

9.7 CONTROL BOX - CONNECTION DOUBLE BELL

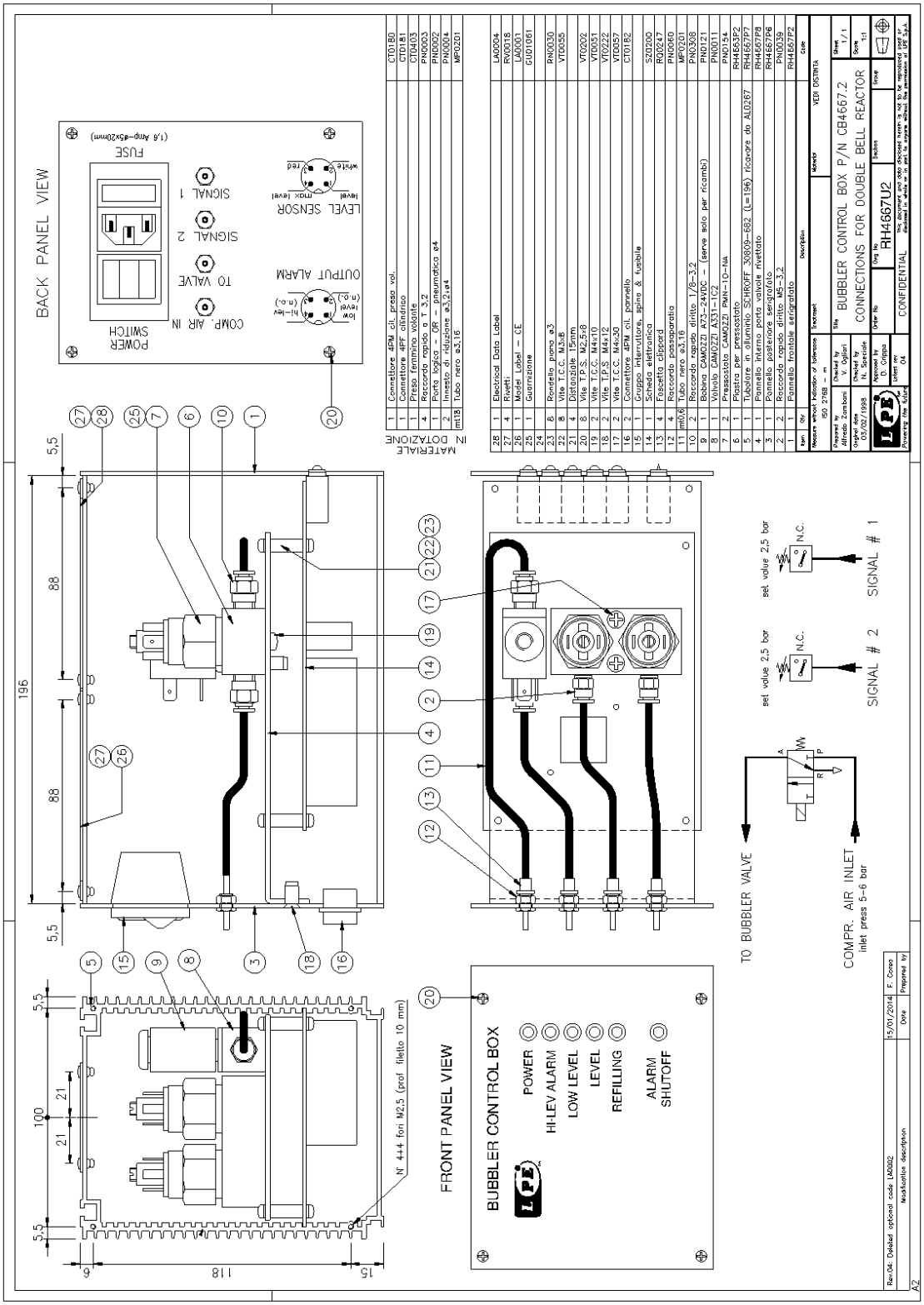

9.8. CONTROL BOX - PNEUMATIC CONNECTIONS

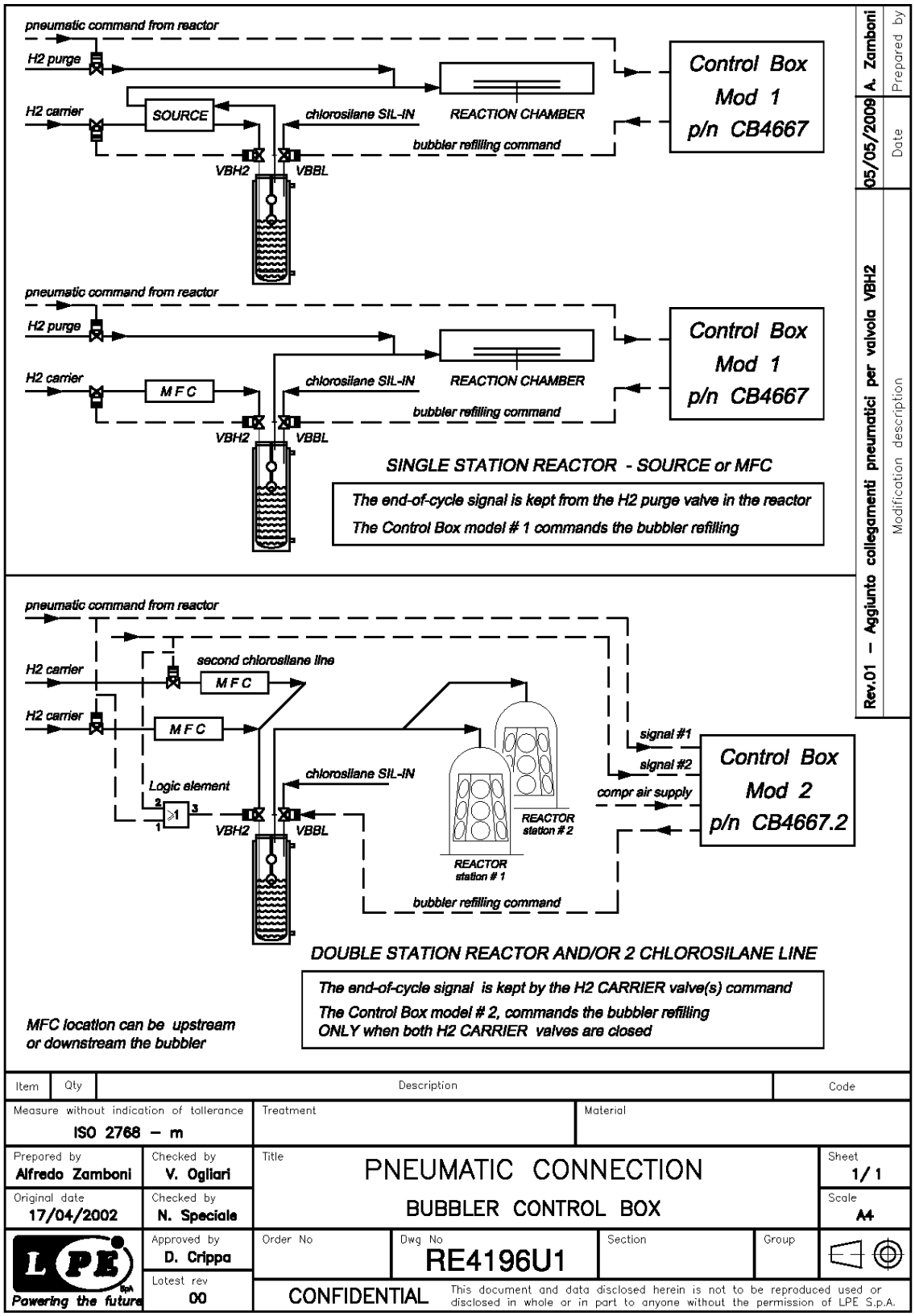

MAN0050 - REV.07 - 22/05/2015

All rights reserved

LPE S.p.A.

Via Falzarego, 8 - 20021 Baranzate (Milano) Italy

RH7020 START UP QUICK GUIDE

revision: 00

ALL RIGHTS RESERVED - LPE S.p.a.

This document is provided with the explicit condition that it must be considered as absolutely reserved and that it must not be reproduced, even partly, neither shown nor revealed to a third party, or however it must not be used in such ways or for purposes different from the ones authorized in writing from the Society.

Compiled:	Verified:	Approved:
E.Bonanno	L.Specker	Enzo Bonanno

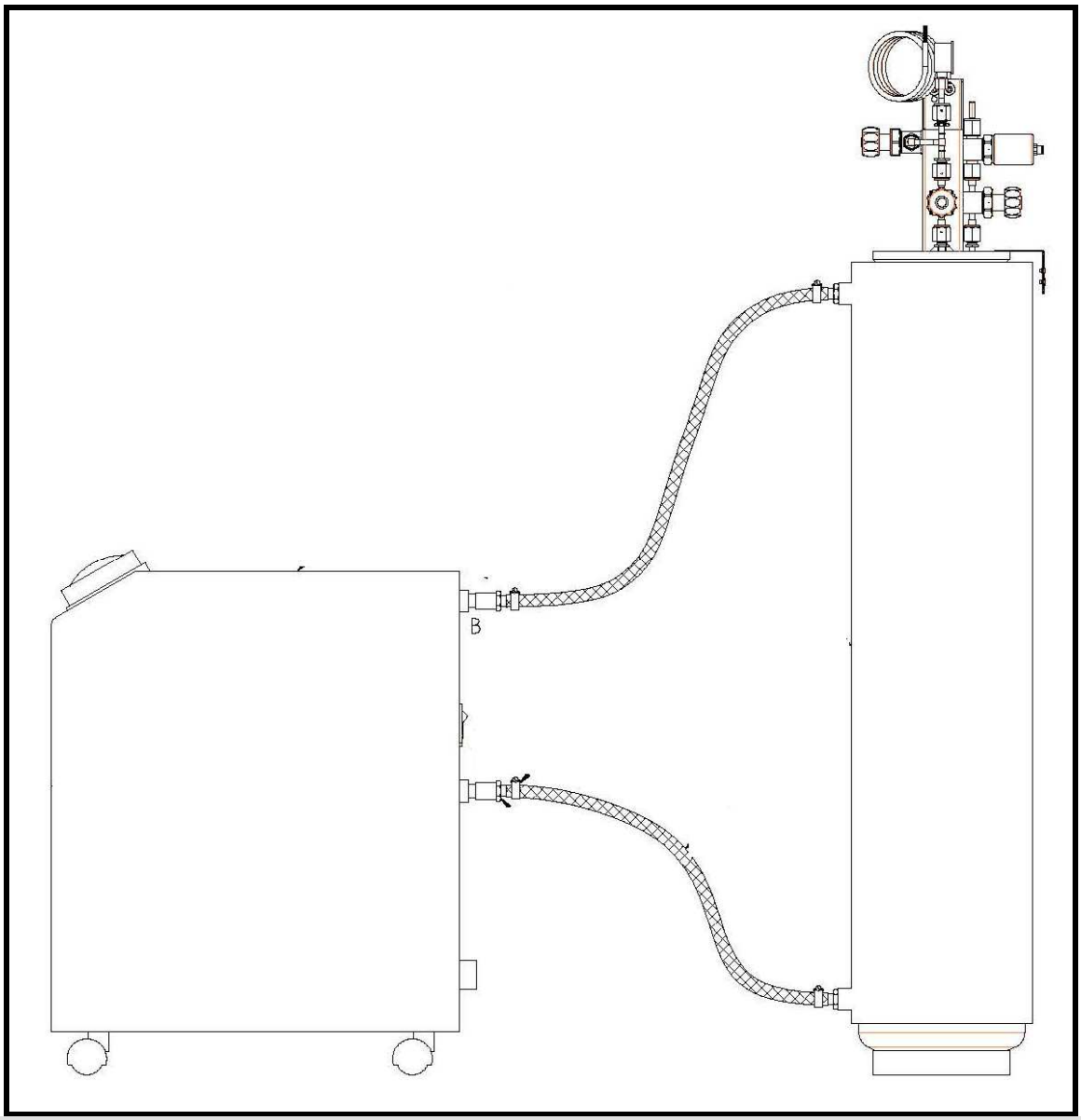
B

CHAPTERS

1. OVERVIEW

2. LPE PARAMETERS SETTING

3. ALARM OUTPUT CONNECTION

ENCLOSURES

A. DRAWING RH7020

NOTE:
FOR TECHNICAL INFORMATION AND INSTALLATION SPECIFICATION PLEASE REFER TO THE DOCUMENTATION SET RECEIVED WITH THE SYSTEM RH7020

1. OVERVIEW

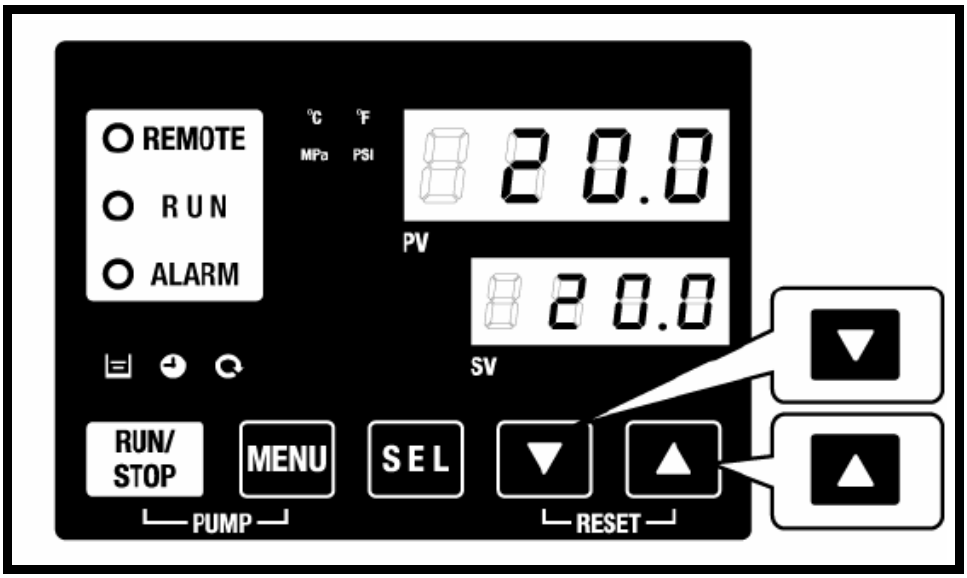

FIG.1 VIDEO KEYBOARD

All THE PARAMETERS CAN BE CHANGED USING THE FRONT PANEL KEYBOARD

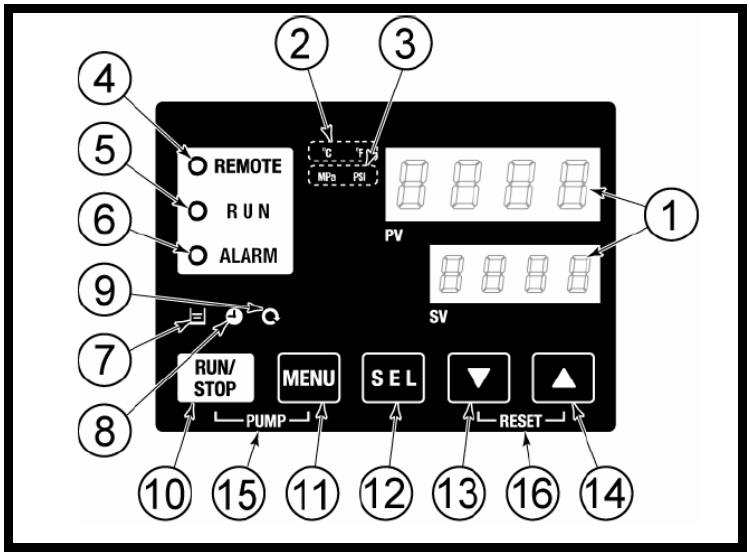

FIG.2 Video keyboard details

No	Description	Function		Reference page
①	Digital display (7 segment, 4 digits)	PV	Displays the temperature and pressure of the circulating fluid and alarm codes.	5.2
		SV	Displays the set temperature of the circulating fluid and the set values of other menus.	
②	[°C °F] lamp	Displays the unit of display temperature (°C or °F).		5.12
③	[MPa PSI] lamp	Displays the unit of display pressure (MPa or PSI).		5.13
④	[REMOTE] lamp	Lights up during remote operation by communication.		5.18
⑤	[RUN] lamp	・Lights up when the product is started and in operation. Goes off when the product is stopped. ・Flashes during stand-by for stop (Interval 0.5 seconds). ・Flashes during independent operation of the pump (Interval 0.3 seconds). ・Flashes during anti-freezing function (At standby: Interval 2 seconds, At operation: Interval 0.3 seconds).		4.4
⑥	[ALARM] lamp	Flashes with buzzer when alarm occurs (Interval 0.3 seconds).		5.3
⑦	[ ] lamp	Lights up when the tank level indicator falls below the LOW level.		4.3
⑧	[ ] lamp	Lights up while the run timer or stop timer function is working.		5.6
⑨	[ ] lamp	Lights up when the product is in automatic operation.		5.9
⑩	[RUN/STOP] key	Makes the product start or stop.		4.4
⑪	[MENU] key	Shifts the main menu (display screen of temperature) the other menu (entry of set values and monitor screen).		5.1
⑫	[SEL] key	Changes the item in menu and enters the set value.		
⑬	[▼] key	Decreases the set value.		-
⑭	[▲] key	Increases the set value.		
⑮	[PUMP] key	When the [MENU] and [RUN/STOP] keys are held down simultaneously, the pump starts running independently.		4.3
⑯	[RESET] key	Keep the [▼] and [▲] keys pressed down simultaneously. This will stop the alarm buzzer and reset the [ALARM] lamp.		6.3

2. LPE PARAMETER SETTING

- PRESS **MENU** KEY FOR TWO SECONDS TO ACCESS TO PARAMETERS PAGES.
- REPEAT THE OPERATION FOR THE DIFFERENT PARAMETERS PAGES (SEE BELOW).
- PRESS **SEL** KEY TO LIST THE PARAMETERS.
- USE THE ARROWS KEYS (13-14) TO CHANGE PARAMETER VALUE.
- PRESS **SEL** TO SAVE THE VALUE AND MOVE TO THE NEXT PARAMETER.

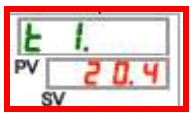

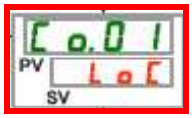

FOLLOWING IS THE LIST OF PARAMETERS TO CHANGE FOR LPE USE
ALL OTHERS PARAMETERS KEEP THE FACTORY SETTING

PARAMETER	LPE SETTING VALUE
SE.09	ON
SE.10	ON
SE.13	PSI
AS.04	22.0
AS.06	16.0
CO.30	B (N.C.) alternative A (N.O.)

FIG. 3 AND FIG. 4 ARE AN EXCTRACT FROM THE THERMOCHILLER USER MANUAL

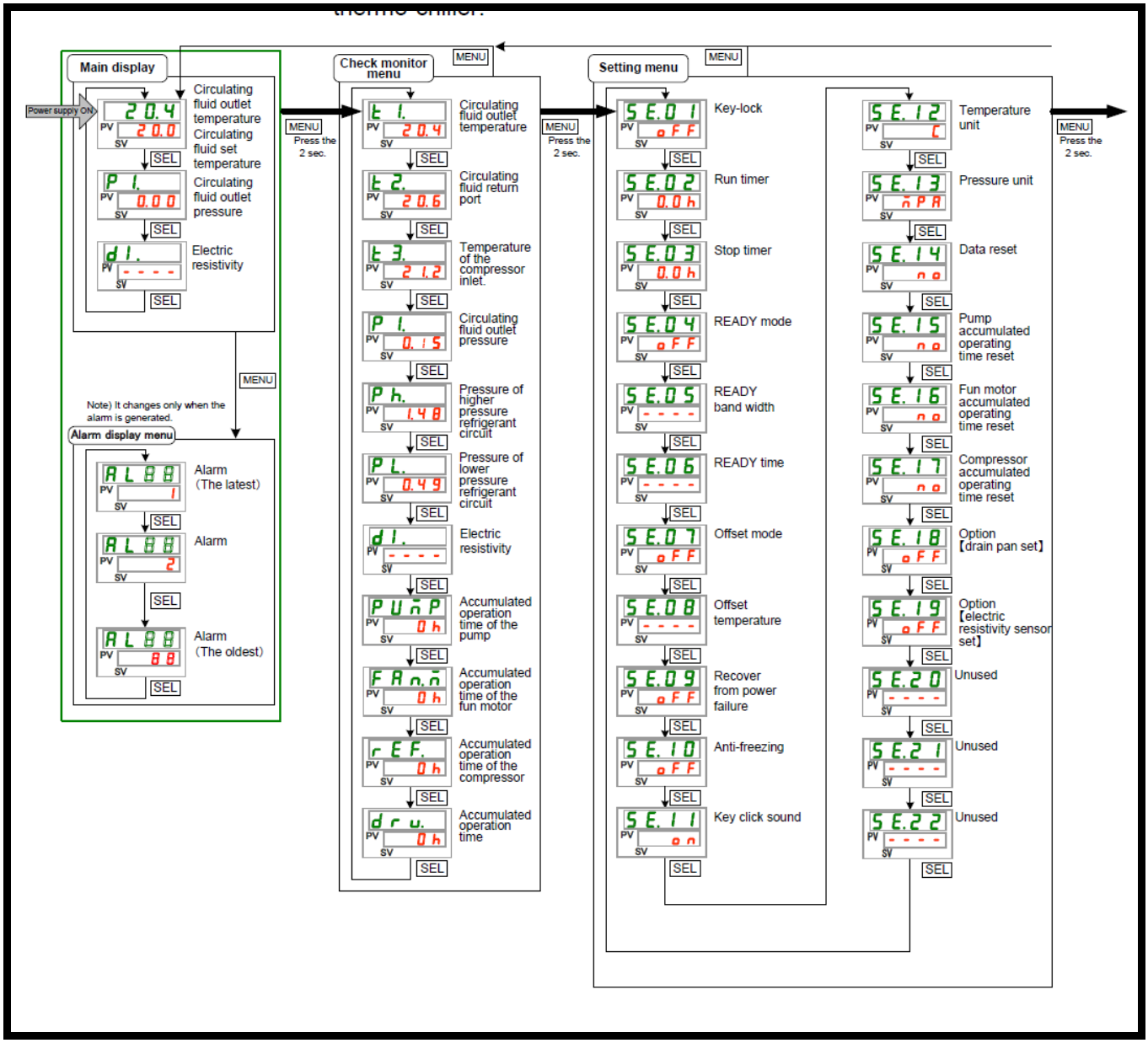

*FIG.3 KEY OPERATION **MAIN** PARAMETERS AND **SE** PARAMETERS*

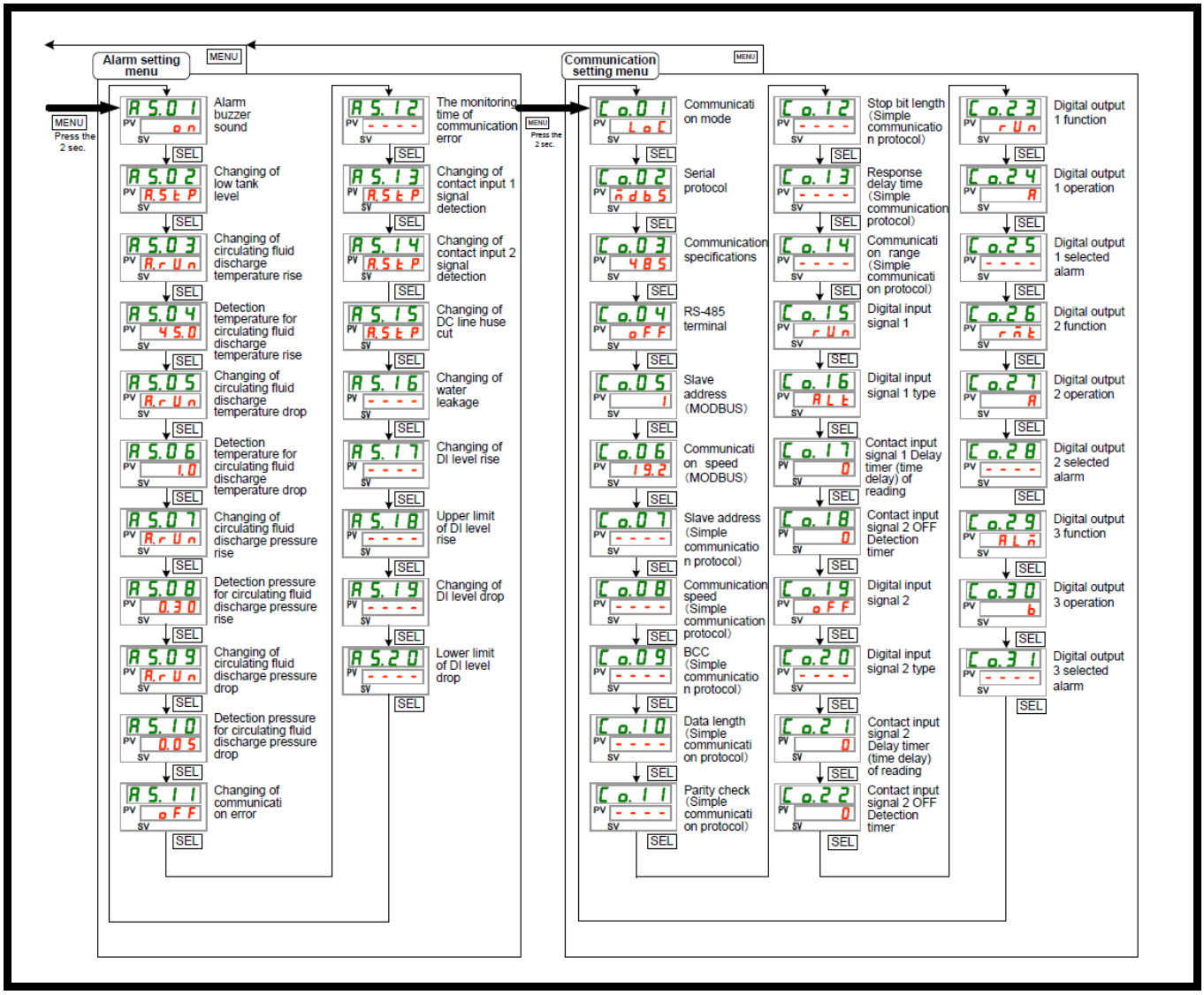

*FIG.4 KEY OPERATION **AS** PARAMETERS AND **CO** PARAMETERS*

B.ALARM OUTPUT CONNECTION

DISPLAY	ITEM	SETTING
SE.09	Recover from power failure	ON
SE.10	Anti–freezing	ON
SE.13	Pressure unit	psi
AS.04	Detection temperature for circulating fluid discharge temperature rise	22.0
AS.06	Detection temperature for circulating fluid discharge temperature drop	16.0
CO.30	Normally closed	B
	Normally open	A

FOR REFERENCES SEE
HRS024 THERMO CHILLER
USER MANUAL

INSTALLATION AT CUSTOMER'R CARE

1 – Connect outlet "A" to BUBBLER inlet (located in the BUBBLER lower side).
– Connect inlet "B" to BUBBLER outlet (located in the BUBBLER upper side).
– Use of transparent PVC hoses recommended (øi 13mm–thickness 2,5mm–grid reinforced–pressure 1 bar).

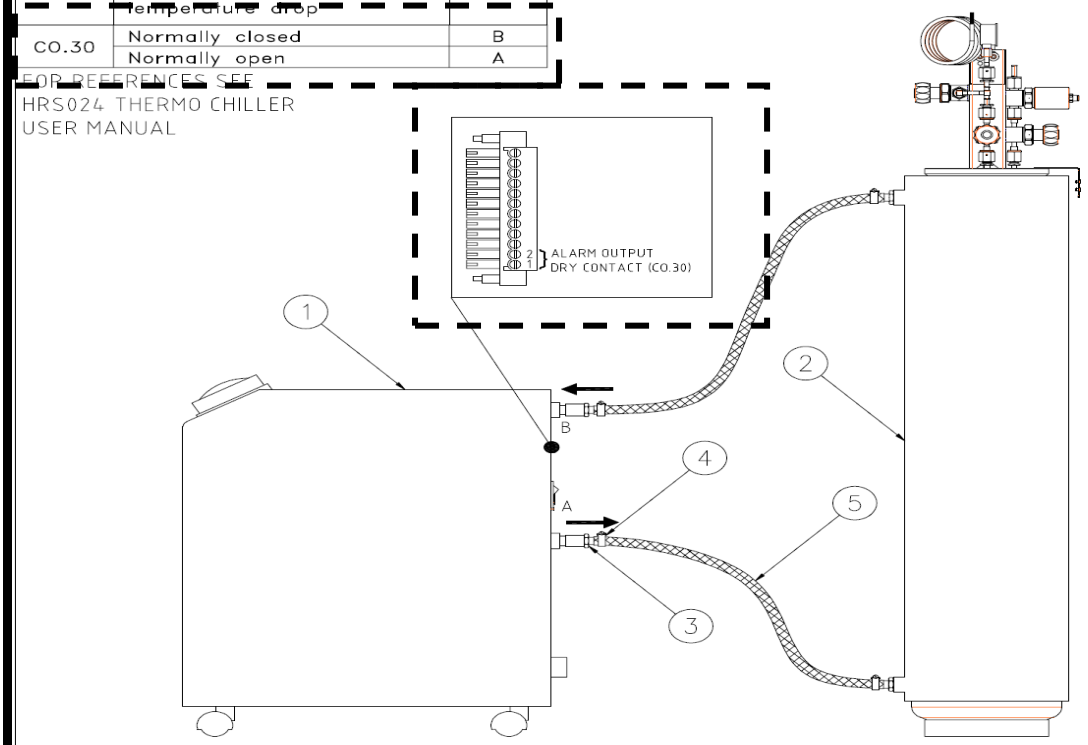

Rev	Date	Modification description	Prepared by
01:	13/11/2012	added notes and table for configuration	L.GOBBO

Item	Qty	Description	Code
5	2	TRANSPARENT GRID REINFORCED PVC HOSE øi13, øe19 – L=10mt	MP0097
4	4	HOSE CLAMP ø14÷22	SS0008
3	4	HOSE HOLDER 1/2" M x 14	RQ0087
2	1	BUBBLER	ON REQUEST
1	1	THERMO CHILLER HRS024–AF–20	TM0242

Measure without indication of tollerance ISO 2768 – m		Treatment	Material
Prepared by Laura Gobbo	Checked by V.O.	Title THERMO CHILLER – BUBBLER CONNECTION	Sheet 1/1
Original date 25/10/2012	Checked by		Scale 1:8
Powering the future	Approved by D.C.	Order No / Dwg No RH7020 / Section / Group	
	Latest rev 01	CONFIDENTIAL	This document and data disclosed herein is not to be reproduced used or disclosed in whole or in part to anyone without the permission of LPE S.p.A.

A. RH7020 ASSEMBLY DRAWING

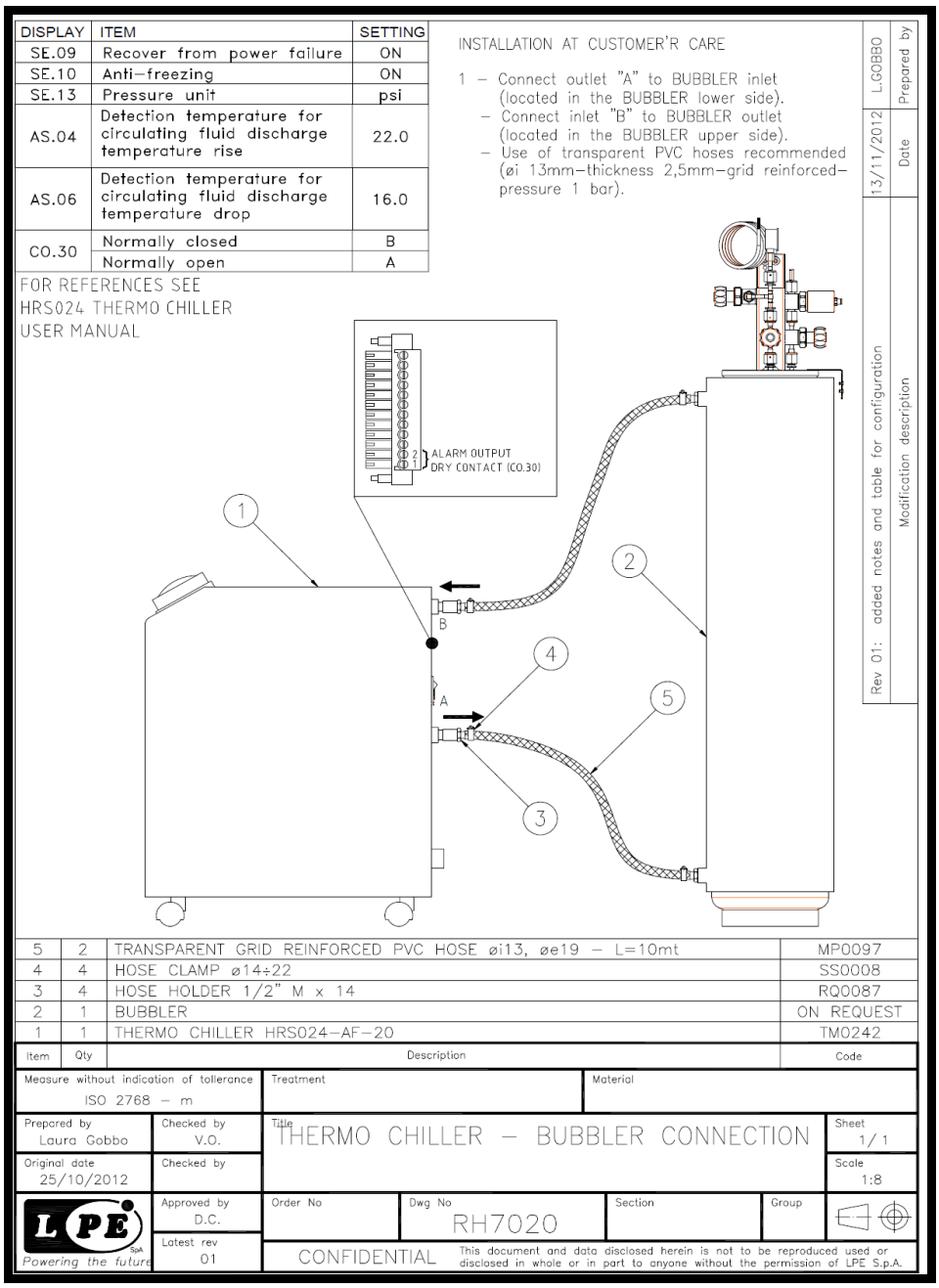

EPITAXIAL REACTOR

PE 2061S

INSTALLATION SPECIFICATIONS

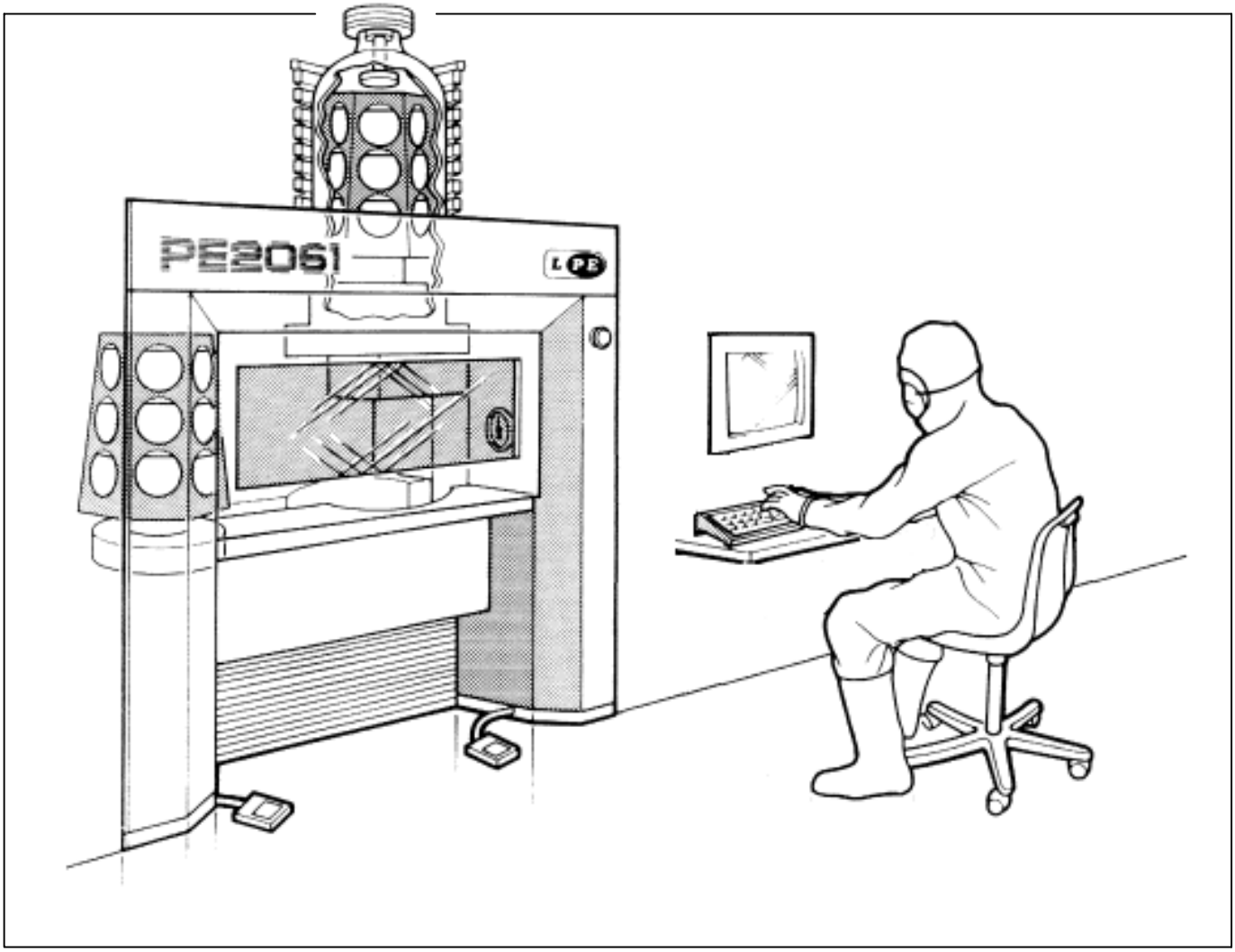

LPE S.p.A.
Powering the future

LPE s.p.a. - Via Falzarego, 8 - 20021 Baranzate (Milan) ITALY
Ph. ++39.02.3834151 - Fax ++39.02.38306118 - E-mail: info@lpe-epi.com

CE

SEMI Member

LPE S.p.A. - Via Falzarego, 8 - 20021 BARANZATE (MILAN) ITALY
Ph. ++39.02.3834151 - Fax ++39.02.38306118 - E-mail: info@lpe-epi.com

Original version

ENGLISH

REVISION #2/06

PROPERTY: **LPE EPITAXIAL TECHNOLOGY**
all rights reserved

No part of these Installation Specifications may be reproduced or used under any form or with any electronic or mechanical method including photocopying, recording with any other method, without the permission of the owner of the Copyright. The drawings are of exclusive ownership.

CHAPTERS

1. INTRODUCTION
2. ADMINISTRATIVE INTERFACE
3. SAFETY
4. ENVIRONMENT
5. LPE PRODUCTION AND INSTALLATION SEQUENCE
6. SHIPPING AND RECEIVING REQUIREMENTS
7. INSTALLATION - TOOLS AND PERSONNEL REQUIREMENTS
8. START UP - TOOLS AND PERSONNEL REQUIREMENTS
9. ACCEPTANCE TEST - TOOLS AND PERSONNEL REQUIREMENTS
10. TRAINING

ENCLOSURE

A. DRAWINGS
B. FACILITIES SPECIFICATIONS
C. UTILITY MATRIX
D. FACILITIES CHECK LIST

INTRODUCTION

1.1 SCOPE

Purpose of this document is provide to the Customer, all the information around the facilities design and equipment installation, request for the installation of the:

EPITAXIAL REACTOR PE2061S

1.2 PE2061S: WHAT'S NEW

The Epitaxial Reactor model PE 2061S is a system whereby silicon obtained from chemical vapor is deposited (CVD =Chemical vapor deposition) on silicon substrates (wafers) according to the following known chemical reaction (or to chemical reactions using compounds similar to silicon) :

$$SiCl_4 + 2H_2 = Si + 4HCl$$

LPE has further improved the Epitaxial Reactor PE 2061 as a response to the industry's requirements for systems producing low cost EPI films, developing a new version called **PE 2061S**.
The main differences between standard PE 2061 and the new **PE 2061S** are :

- Increased throughput
- Reduced power consumption
- Reduced wafer cost
- Replacement of silicon source controllers with MFC
- New HCl line for susceptor etch with dedicated MFC
- Bubbler with continuous filling
- New IGBT power generator side advantages

The throughput's increase (12% approx.) is due to the use of the new IGBT generator with dual power output.

The PE2061S provide an increased throughput than a standard model by heating up the bell jar in stand by while the other bell jar is running the last minutes of process.

In the following diagram is shown the differences between the two systems:

Standard PE2061:

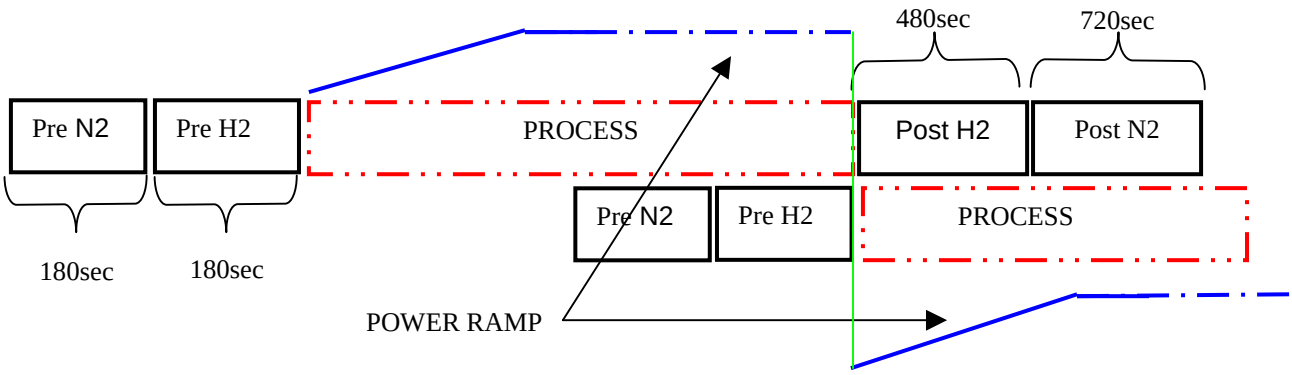

PE2061S:

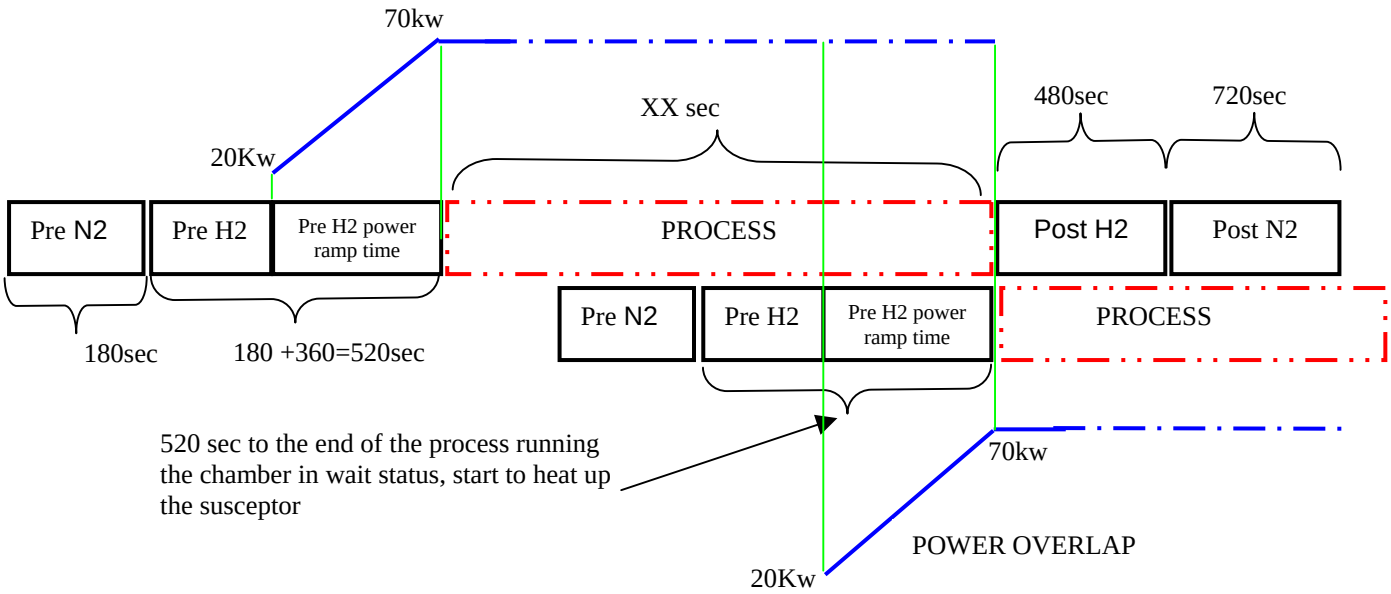

1.3 EQUIPMENT DESCRIPTION

In standard configuration, the Epitaxial Reactor PE2061S is composed by:

- Epireactor mod. PE2061
- Epiconverter mod. IFC 150/2
- Epi Control Panel (SERVER) mod. FUJITSU-SIEMENS PRIMERGY TX150 S4 or equivalent model
- Bubbler mod. Minispeed 4 or Standard 14 lt. (capacity to request)

NOTE: the typical installation includes the **Exhaust Scrubber**, which is not provided by LPE, unless differently specified in the purchase order.
For Exhaust Scrubber requirements and connections see the chapter Exhaust Gas

1.3.1 Lay out description

In a typical reactor installation, the front section of the **Epireactor PE2061** is mounted "through-the-wall" in according with the dimension and service areas, show in above mentioned drawings.
The cutting size on clean room wall is shown in dwg. **RH5250.U13 (encl.A)** gaps can be sealed by a stainless steel frame.
The minimum height clearance above the Reactor frame MUST BE KEPT for safety reasons.

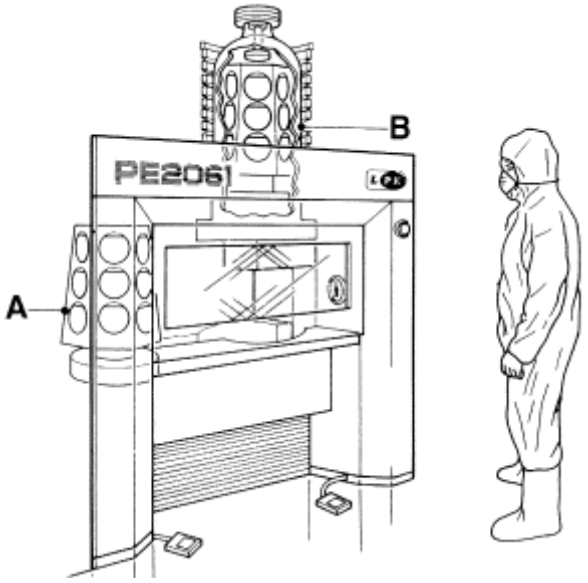

The CPU of the **Server**, with the UPS, is placed in Gray Room, on appropriate structure (LPE supply).
The monitor (mod. LCD TFT) can be positioned either on the right or on the left side of the Reactor.
The monitor can be placed in Gray or in clean Room. For the Gray Room solution, into a specific wall cut (ref. dwg. **RH5250.U13** - **encl.A**) on the Workstation structure, for the Clean Room solution, on the appropriate steel structure (Customer supply) with the keyboard and mouse (ref. dwg. **RH5250.U11** - **encl.A**),

The **Epiconverter IFC150/2** should be better located, as shown in the drawing (ref. dwg. **RH5250.U11** - **encl.A**). The converter may also be remotely located (on upper or lower floor is acceptable), to be specified in the purchase order.

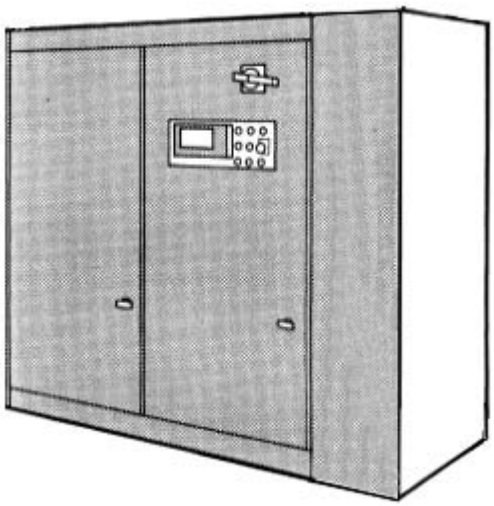

⚠ATTENTION

To maximum distance from the Reactor must be such that length of coaxial cables does not exceed 15 m (50ft).

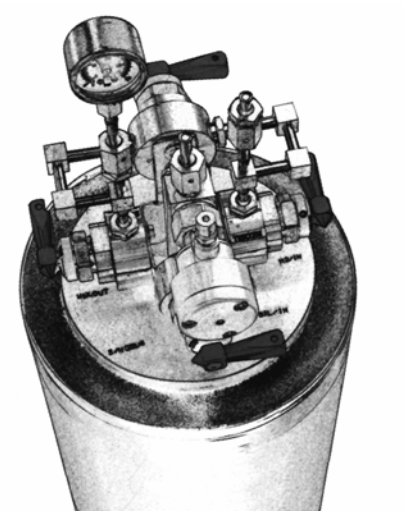

The **Bubbler** must be located in a scavenged cabinet, close to the reactor (or remotely up to 8m/26ft tube length), which must also include tube connections.

⚠ATTENTION

The system, in operation, contains H2 (flammable and exploding stuff) and chlorosilane that may generate HCl fumes in case of leakage.
Safety caution and personal protection media are required in case of disconnection and/or maintenance operation on valve group

The cabinet is NOT PART OF THE SUPPLY.

Bubbler saturator type:

model	P/N	overall dim.mm (inch)	inside dim. mm(inch)	Weight Kg/(lb)
MINISPEED - 4 lt.	16G701	160x160x1250 (6,2“x6,2 “x49“)	dia 83x990 h (3,2“x38,9“h)	16(35)
STANDARD - 14 lt.	16G702	210x210x1250 (8,2“x8,2“x49“)	dia 155x990 h (6,1“x38,9“h)	34(74)

1.3.2 Dimension (W x D x H) and weight

1. Epireactor

Indicative dimensions: 1,800 x 1,725 x 2,735 mm (70,78" x 67,91" x 107,68")

Approx. weight: 2,100 kg. (4630 lb)

2. Epiconverter

Indicative dimensions: 1,860 x 750 x 1,790 mm (73,23" x 29,53" x 70,47")

Approx. weight: 1,100 kg. (2425 lb)

3. Epi Control Panels

CPU:

Indicative dimensions: 206 x 620 x 440 mm
(8.11" x 23.70" x 17.32")

Approx. weight: 28 Kg. (61 lb)

MONITOR:

Indicative dimensions: 397.3 x 240 x 439.5 mm
(15.64" x 10,31" x 18,15")

Approx. weight: 6.5 Kg. (14 lb)

4. UPS for UE (230V)

Indicative dimensions: 196 x 546 x 432 mm
(7,56" x 9.44" x 17.00")

Approx. weight: 50 Kg. (110 lb)

UPS for US (115V)

Indicative dimensions: 196 x 546 x 432 mm
(7,72" x 21,50" x 17,00")

Approx. weight: 50 Kg. (110 lb)

5. BUBBLER (cabinet)

Indicative dimensions: 300 x 300 x 1,500 mm
(11,81" x 11,81" x 59,06")

Approx. weight: up to 35 Kg. (77 lb) depending to model

6. Susceptor Trolley (optional)

Indicative dimensions: 850 x 480 x 860 mm
(33,46" x 18,9" x 33,86")

Approx. weight: 55 Kg. (121 lb)

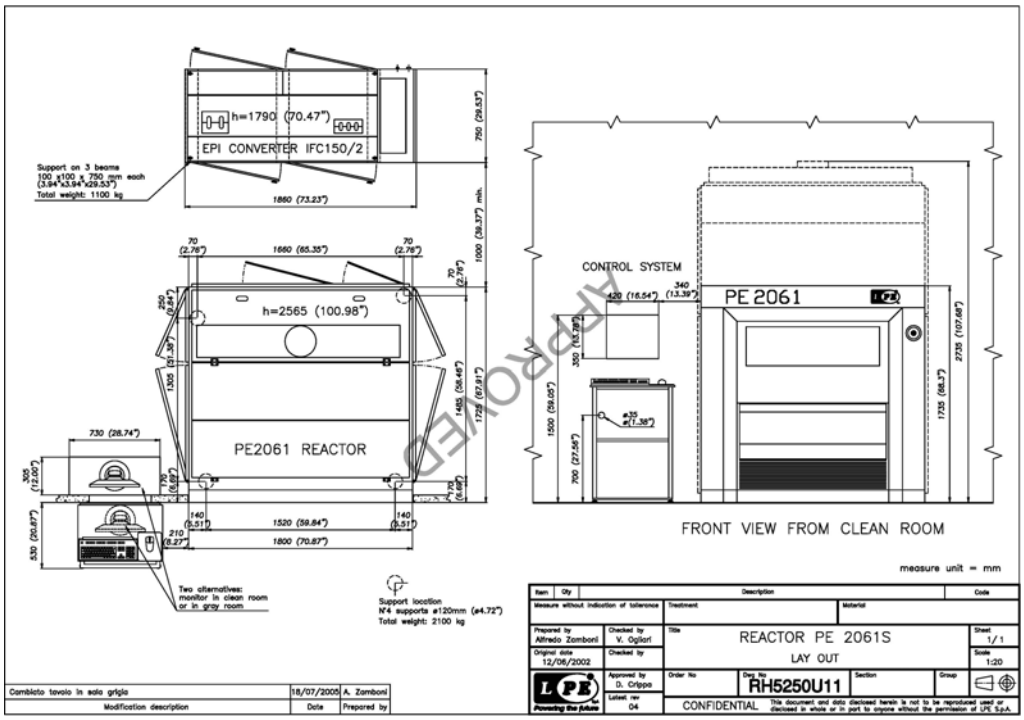

ref. dwg. **RH5250.U11** - **encl. A**

Note: the indicate dimensions of equipment are indicatives.
In particular the dimensions of monitor, UPS and Workstation, could be subjected to modification, according to models available on the market. Please to contact LPE before the delivery for dimensions confirmation.

ADMINISTRATIVE INTERFACE

	Supplier	
Company Name	**LPE S.p.A.**	
Address	Via Falzarego 8 20021 Baranzate (Milan) - Italy	
Phone/Fax/E-mail	++39.02.3834151 ++39.02.38306118 info@lpe-epi.com	
Contact & Title	Managing Director/Sales & Marketing **Ing. F. Preti** franco.preti@lpe-epi.com	
	Sales & Marketing **Mr. L. Porru** luca.porru@lpe-epi.com	
	Technical Service **Mr. E. Bonanno** enzo.bonanno@lpe-epi.com	
Shipping (FOB)		
Phone/Fax		
Contact		
Equipment Identification Data:		
Model	PE 2061S	
Serial Number		
Sales Order Number	//	
Purchase Order Number		
Equipment Name	EPITAXIAL REACTOR	
Type	BARREL	
Description	Induction heated, twin chamber reactor with large batch load, short cycle time and vertical barrel geometry	
Option Included	//	
	Customer	**User** (Install. Location)
Company Name		
Address		
Phone/Fax/E-mail		
Contact & Title		

SAFETY

3.1 EQUIPMENT SAFETY DESCRIPTIONS

The Epitaxial Reactor PE2061*S* has been designed and manufactured in accordance to safety rules (European Machine Directive and Safety Guidelines for Semiconductor Manufacturing Equipment SEMI S2) suitable to ensure protection against bodily damage and environmental damage.

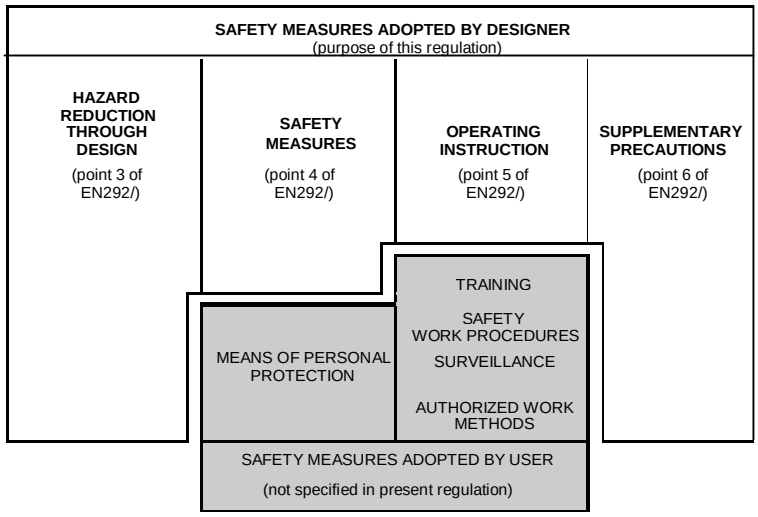

The machine is provided with a set of safety devices, to guarantee the operator safety and the correct operation of the machine.
All safety devices are tested, with appropriate procedures, in LPE factory, before the delivery. During the machine start up, the tests are repeated and the complete check list is delivered to the Customer.
The machine presents no hazard for the operator, if used according to the instruction provided by LPE and provided that the safety devices are constantly kept efficient.
LPE supplies, together with the machine, an appropriate Operator Instructions Manual, that contains all the information on the life cycle of the machine from delivery to disposal, all the information on the regulations for the correct operation (installation, use, maintenance, troubleshooting, etc.) and all the safety regulations to be adopted in order to permit the operator a simple, hazard free use of the machine.
The Epitaxial Reactor PE2061*S* is built in accordance to the European Directives and the International Code, as:

Directives	Standards
Machine Directive 98/37/EEC	**EN 12100-1 / EN 12100-2 / EN 481**
EMC Directive 89/336/EEC	**EN 61000-6-4 / EN 61000-6-2**
Low Voltage Directive 73/23CEE	**EN 60204 / EN 60519-1 / EN 60519-3**

The machine has been subjected to appropriate test (to Competent Body for the Electromagnetic Compatibility) and it is **CE** marked.
LPE supplies the "Conformity CE Declaration" for each machine.

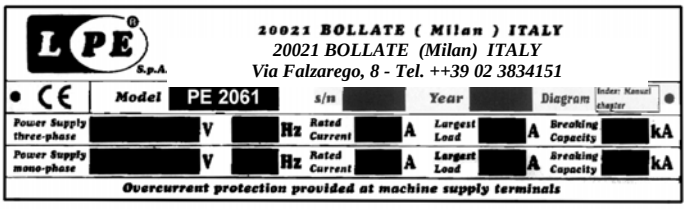

Important Note: Customer shall perform all necessary actions to comply with local safety, environmental and all other regulations concerning facilities and equipment installation .

3.2 NON-PHYSICAL EMISSION

Non-physical emission	Clean Room	Gray Room	Note
Radio Frequencies	Equipment Shielded	Equipment Shielded	1
Temperature (external wall)	30 ÷ 40 °C (86 ÷ 104 °F)	30 ÷ 40 °C (86 ÷ 104 °F)	2
Humidity	None	None	
Vibrations	None	None	
Epireactor Noise Level	Lep,d = 70 dB(A)	L_N = 80 dB(A)	3
Epiconverter Noise Level	\\	L_N = 80 dB(A)	
Odors	None	None	
Ionizing Radiation	None	None	

Note: (1) PACE-MAKER wearers should not work on the machine

(2) During loading/unloading, susceptor and wafer temperature can easily exceed 100 °C (212 °F)

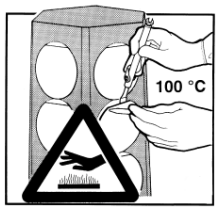

(3) 70 dB in the operator position

⚠ CAUTION The machine cannot operate in an explosive atmosphere

3.3 MONITORING COMMUNICATIONS

On Customer request

3.4 CLEARANCES

A clearance area is necessary around each machine.
For operator access and equipment maintenance and operation of doors, drawers and panels integrated into the equipment, see dwg. **RH5250.U12 (encl. A)**
Besides the clearance area, the Customer will provide the safety distance, in accord with the local codes.

3.5 SAFETY RELATED CHECKS

The equipment is manufactured in line to safety rules suitable to ensure protection against bodily damage and environmental damage.
The safety devices reduce or eliminate the electrical/mechanical/hot burns hazard.

The **main safety** assemble on the equipment are:

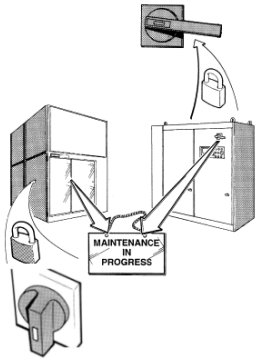

1. Main switches interlocked with padlock

2. Overload/short circuit protection breakers

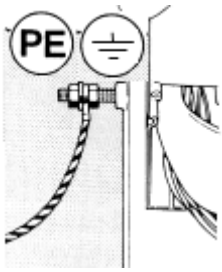

3. Equipment grounded

4. Emergency circuit

Emergency Power Off buttons are located:

1 - On the front of the reactor (Clean room) : Reactor EMO
2 - On the rear of the reactor (Gray room) : Reactor EMO
3 - On the front of the power generator : Generator EMO

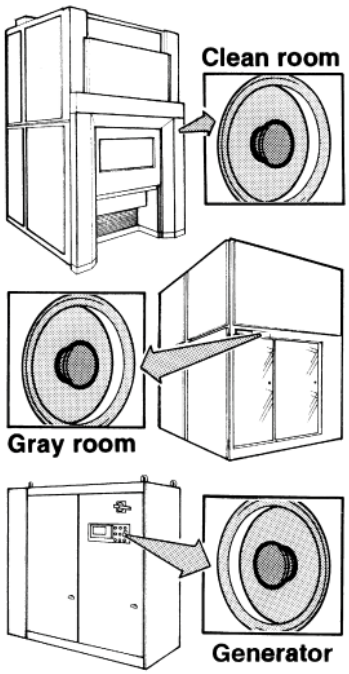

Reactor Emergency Power Off:
Effects of activating the Reactor Emergency Power Off button:
1 - All power in the reactor and generator is turned off
2 - Nitrogen purge begins (through a normally open valve)
3 - Induction coils are no longer energized
4 - Reactor cooling air shut off
After the Reactor Emergency Power Off button has been activated, the reactor has to be restarted manually - this may damage epi wafers and reactor.
5- Cooling water is maintained

Generator Emergency Power Off:
Effects of activating the Generator Emergency Power Off button:
1 – Power in the generator is turned OFF
2- Reactor induction coil are no longer energized
2 - Reactor power is maintained
3 - Reactor alarm level H is usually triggered
4 - Cooling air is maintained
5 - Cooling water is maintained

5. Software - check the correct operation of the equipment

6. UPS - if the power is out, the UPS guarantee the Workstation functioning

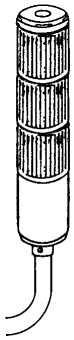

7. Light column

   This has 3 positions:
   - GREEN: machine running, a cycle has been started
   - STEADY YELLOW: machine powered but not operating
   - FLASHING YELLOW: at least 1 station may be unloaded
   - RED: alarm, code and description shown on DISPLAY

8. Buzzer

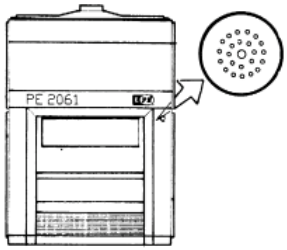

   MAINTENANCE STATUS:
   - precedes and continues throughout entire rack movement
   OPERATION STATUS:
   - intermittent buzzing: one of the stations is ready for unloading
   - steady buzzing: alarm or warning status

9. Access doors and panels to hazard areas - safety interlocked Microswitches stop the process (by cutting the generator power) and key or tools are requested to open the doors and panels

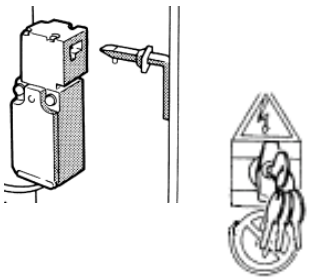

10. Warning label - inform on the hazard into doors and panels

11. Hydrogen sensors - the sensors control any gas leaks which, in any event, are expelled by the suction system

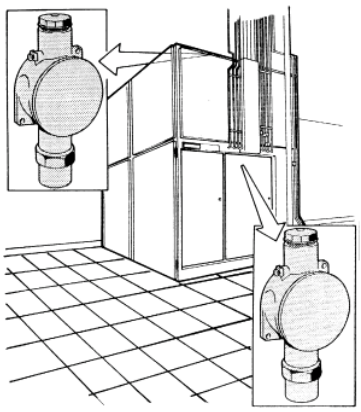

12. Front shield - protect the operator by preventing access to the hazard area

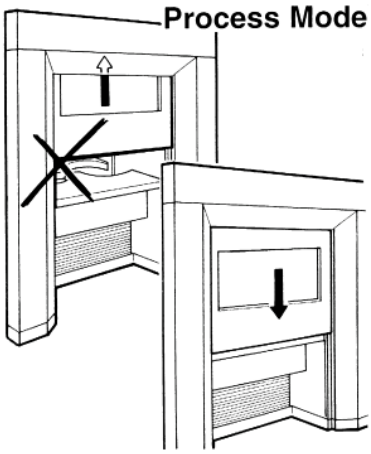

Other safety devices are assembled on the equipment. For detail see the Operator Instruction Manual, that contains all information on safety regulations, all information on the life cycle of the machine from delivery to disposal, all information on the regulations for the correct operation (installation, use, maintenance, troubleshooting, etc.).

All safety devices are tested in LPE factory and, during the start-up, the tests are repeated. The complete Check List is delivered to the Customer.
The voice concerning the safety devices (marked with the proper symbol) are:

- Pressure switch station A - warming
- Pressure switch station A – alarm
- Pressure switch station B - warming
- Pressure switch station B – alarm
- Safety switch port station A - lift
- Safety switch port station B - lift
- Safety switch port station A
- Safety switch port station B
- Safety switch computer port
- Front shield closed
- Scrubber status
- Shutter plates vacuum switch station A
- Shutter plates vacuum switch station B
- H_2 leak detector warming 1
- H_2 leak detector alarm 1
- H_2 leak detector warming 2
- H_2 leak detector alarm 2

ENVIRONMENT

4.1 ENVIRONMENT CLEANLINESS

The front side of the Epireactor requires a Clean Room to meet operational specifications. The remainder requires an area with a different minimum.

4.1.1 Clean Room

class: 10 or better

The "through-the-wall" mounting system used for reactor entails a small protrusion into the clean room ensuring that it will not disturb even a laminar-flow clean room.
The reactor loading station has a built-in, horizontal laminar flow (class 10 or better) providing an ideal environment to prevent particle contamination of wafers during loading/unloading.
The air draw from the clean room through a pre-filter and sent back to there trough an absolute filter, to prevent perturbing clean room pressure and air flow.

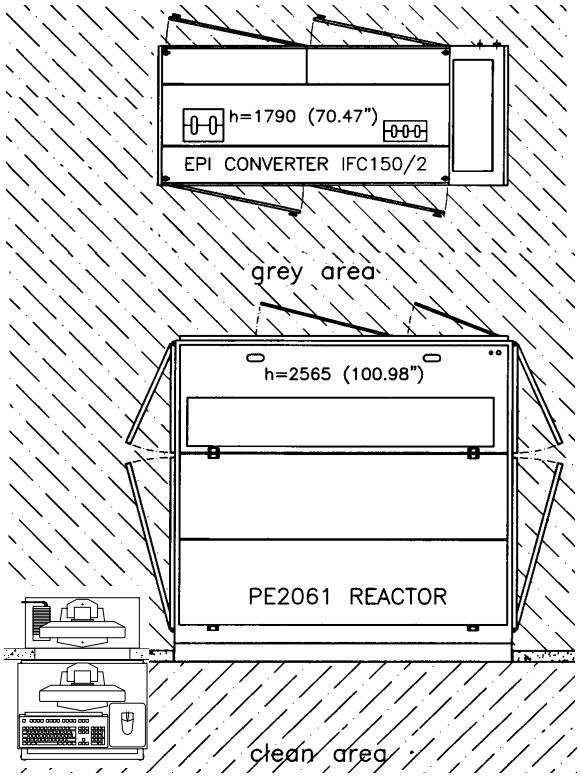

4.1.2 Gray Room

class: < 10,000

Gray area conditions are not critical either for the Reactor or for the Epiconverter. Nevertheless, excessive temperature, humidity or dust content may affect reactor life.

4.2 TEMPERATURE

	Operating Range min./max.		Target Temp.	Tolerance ±
CLEAN ROOM	15°C (59°F)	25°C (77°F)	21°C (70°F)	2°C (3,6°F)
GRAY ROOM	15°C (59°F)	30°C (86 °F)	21°C (70°F)	2°C (3,6°F)

4.3 RELATIVE HUMIDITY

	(%)
CLEAN ROOM	< 60
GRAY ROOM	< 60

4.4 NOISE REQUIREMENTS

This equipment is not sensitive to and does not emit outside, the electromagnetic radiation, electromagnetic interference, radio frequency and electrostatic discharge, because it comply the Electromagnetic Compatibility Directive (89/336/EEC). Special attention however is required in the cables arrangement, to fulfil the EMC. LPE recommends the laying of all external cables to a closed metal raceways, grounded at the both ends. Power cables and signal cables may lay in the same raceway. Ground cables should be apart from power cables.

The equipment is sensitive to acoustical vibration. Follow the Criterion B - C for dimension the devices to reduce the vibration.

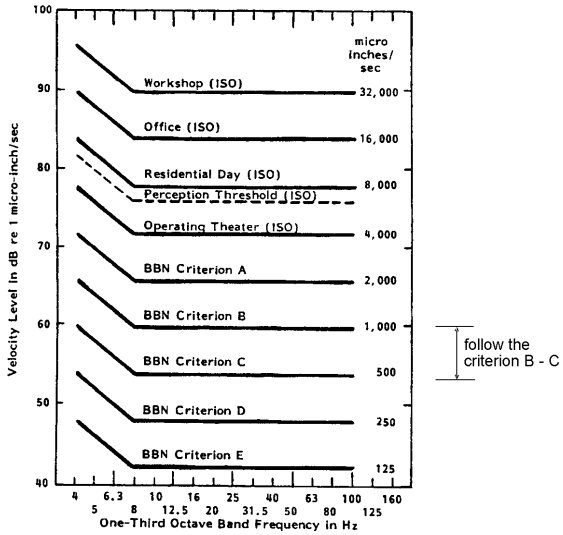

4.6 FACILITIES

For all details regarding facilities end connections, see the **encl. A ÷ F**.
The Facilities Check List is the check that the Customer should carry out, after the completion of the facilities hook-up, to the connection on the Epitaxial Reactor. This Check list should return to LPE duly filled. When receiving the Facilities Check List, LPE will send the Engineer for start-up operations.

LPE PRODUCTION AND INSTALLATION SEQUENCE

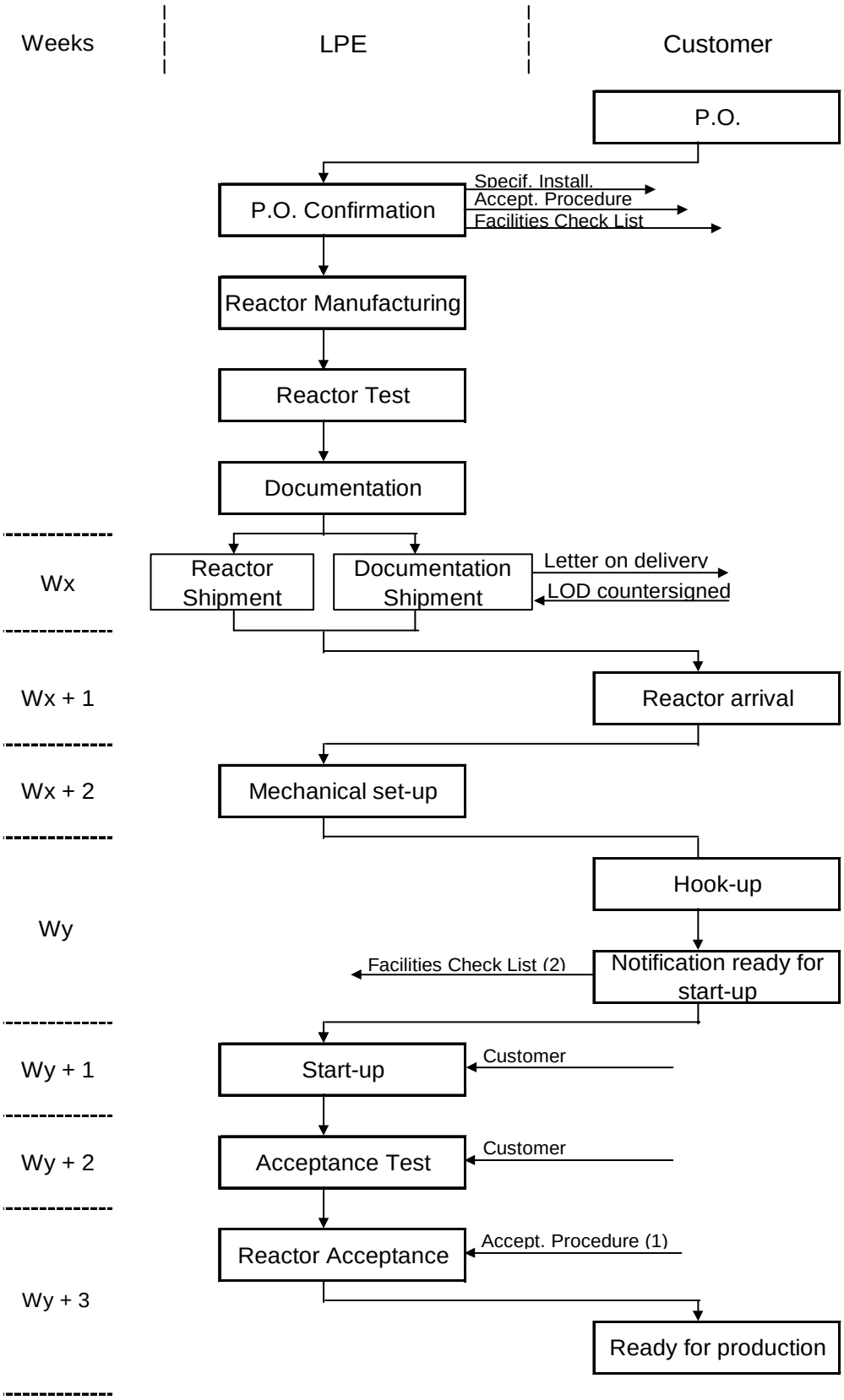

SHIPPING AND RECEIVING REQUIREMENTS

6.1 RECEIVING

The following table, concerns a standard delivery:

Container N°	Description	Dimensions mm (inch) L x W x H	Weight Gross Kg (lb)	Impact Monitor	Tilt Monitor
1	Epireactor upper station	2080x1880x1680 mm 81,79"x73,92"x66,06"	780 (1719)	25 G	25 G
2	Epireactor lower station	2080x1880x1930 mm 81,79"x73,92"x75,89"	1500 (3306)	25 G	25 G
3	Epiconverter	2050x1100x2260 mm 80,61"x43,25"x88,87"	1380 (3042)	25 G	25 G
4	Miscellaneous accessories	1470x1180x1230 mm 57,80"x46,40"x48,37"	470 (1036)	25 G	25 G
5	Workstation + support WS + quartz set	1920x780x1240 mm 75,50"x30,67"x48,76"	300 (661)	25 G	25 G
6/7	Quartz bell jar	1150x600x800 mm 45,22"x23,59"x31,46"	30 (66)	25 G	25 G
8 (opt.)	Susceptor fork lift	730x730x1240 mm 25,43"x25,43"x48,76"	70 (154)	25 G	25 G

This figure as reference only. For the correct values, see the Packing List.

The content of every box is protected by an aluminum plate shield type MIL-B-131-H class 1 and polyethylene film. Hygroscope bags containing salt are used to protect against humidity during the transport.

6.2 HANDLING

Special instruction: put particular attention to the box gravity center and the rope inclination (marked outside the boxes).

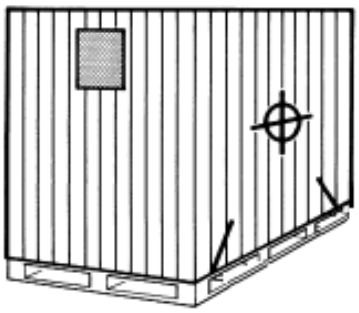

Transportation equipment: to unload is required the fork lift or crane, with a load bearing capacity >2,000 Kg (4500lb). The fork measure of the fork lift should be: length = 1,800mm(70 inch) - width = 1,200 mm (47inch)

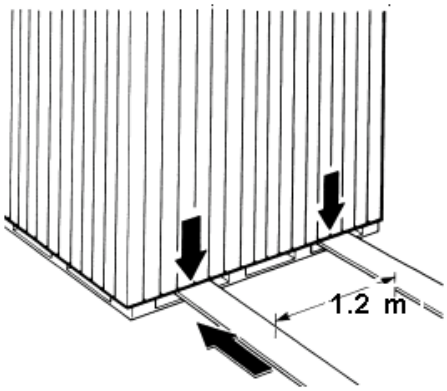

Personnel: the unload equipment must be used to specialized operator.

6.3 STORAGE

Special instruction: the boxes must be stored in a covered and dry place.
The temperature range of store should be from -10 °C to 40 °C (14 °F to 104 °F).
Do not lay the crates on top of one another.

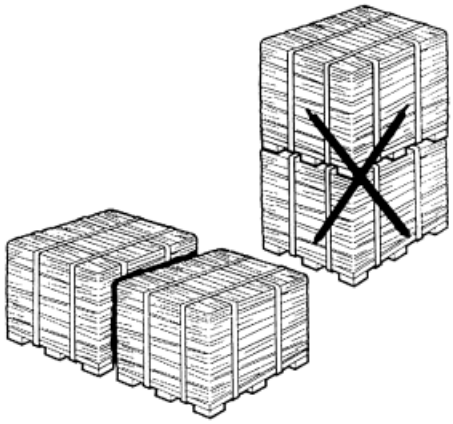

Dimension of largest box to move into storage: 2080 x 1880 x 1930 mm (81,79"x73,92"x75,89")inch

Weight of largest box to move into storage: 1500 Kg (3306 lb)

⚠ CAUTION
put special attention to the boxes containers the Workstation and the quartz bell jar

INSTALLATION - TOOLS AND PERSONNEL REQUIREMENTS

7.1 UNPACKING

LPE recommend the opening of the boxes only at LPE personnel presence.

Special instruction: before the opening boxes, check the impact and tilt monitor, installed on the outside of the boxes and on the barrier bag.
Open boxes starting from the cover.

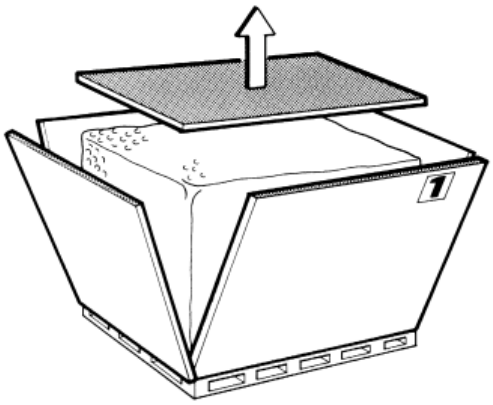

Remove the barrier bag (cutting it at its base) and the polyethylene film.

Personnel: to open the boxes two people (laborer) to help the LPE personnel for 1 day.

7.2 LOCATING

According to the sales contract, the machine is positioned by the technicians sent out by LPE.
When the LPE personnel arrive, the foundations must be ready and boxes located near the positioning area.

Special instruction: put particular attention during the transport of the pieces.

The Epireactor must be located on the floor, on its 4 supports and then perfectly leveled.

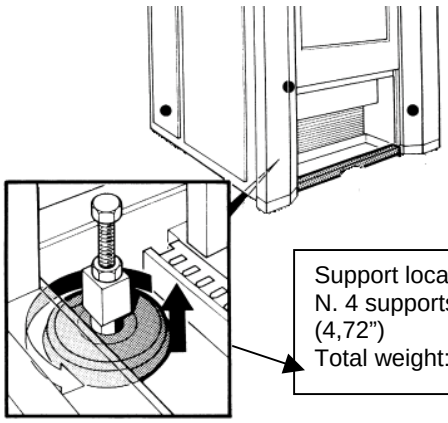

Support location
N. 4 supports dia. 120 mm (4,72”)
Total weight: 2,100 Kg (4630lb)

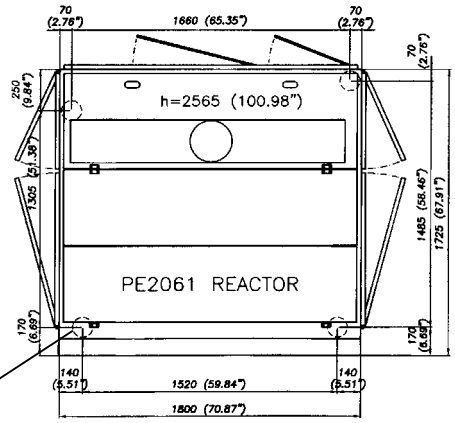

The Epiconverter must be located on the floor or on 3 cross-beams, positioned under the cabinet in the points shown.

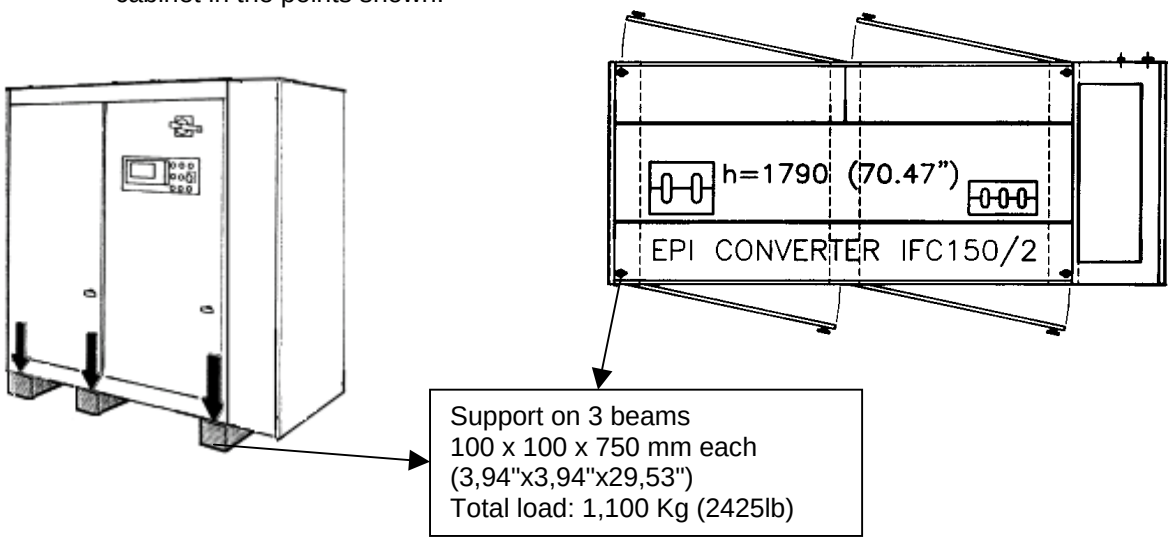

The maximum distance (A) from Epireactor to Epiconverter must be such that of the coaxial cable does not exceed **15 m** (45 ft)

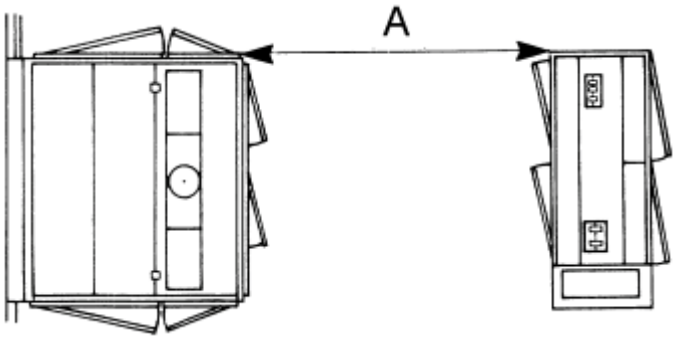

Note: the Epitaxial Reactor PE2061S comply the EMC Directive. Special attention however is required in the coaxial cables arrangement. The coaxial cables (LPE supply), must be routed through enclosed ventilated metal raceways (Customer supply), grounded at the two ends.

Only the coaxial cables may lay in to the raceway.

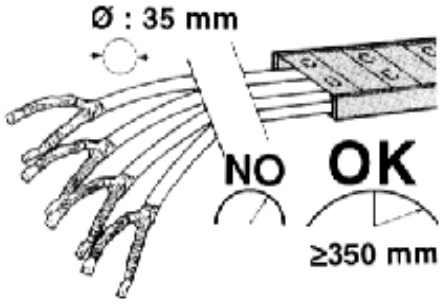

Weight:	2.3 Kg/linear meter
Dia:	35 mm
Curve minimum radius:	>350 mm

The Bubbler must be located in a scavenged cabinet of proper size, close to the Epireactor (or remotely up to 8/26 meter/feet tube length). In order to allow easy operation of manual valves and sensor.
Before connecting Bubbler, read with particular attention, the Pre-installation Instruction enclosed to the Bubbler.

For detail information on correct positioning of the equipment, see the Manual Instruction

Transportation equipment: to transport the Epireactor lower station and the Epiconverter, is required the fork lift or crane, with a load bearing capacity >1,500 Kg (3300lb). The fork measure of the fork lift should be: length = 1,800 mm (70,78") - width = 1,200 mm (47,18").

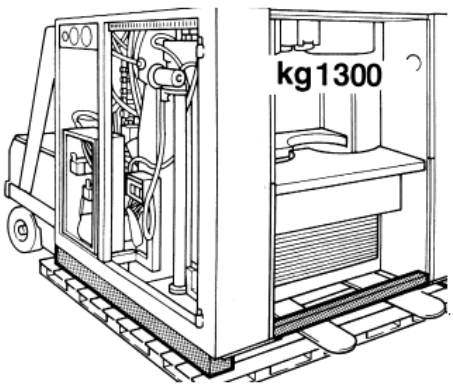

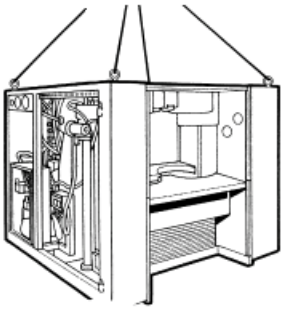

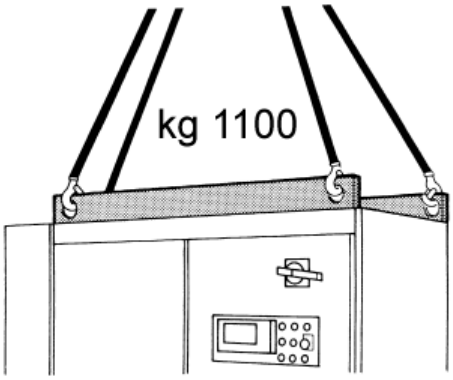

To transport the Epireactor upper station, is required a transpallet and a platform or pantograph or similar, to lift the upper station to 1,600 mm (62,91"), with a capable of reaching weight bearing capacity = 400 kg (881lb).

For little movement need a forked level - length = 1,500 mm (58,98")

Personnel: the transport and lift equipment must be used to specialized operator.
To help the LPE personnel to position the machine, need, for 1 day, two skilled men for equipment moving.

Dimension of largest pieces to move into gray room: Epireactor lower station = 1800 x 1725 x 1540 mm
(70,78" x 67,91" x 60,55")
Epireactor upper station = 1800 x 1725 x 1195 mm
(70,78" x 67,91" x 46,99")
Epiconverter = 1860 x 750 x 1790 mm
(73,23" x 29,53" x 70,47")

Weight of largest pieces to move into gray room: Epireactor lower station = 1300 Kg (2866 lb)
Epireactor upper station = 380 Kg (838 lb)
Epiconverter = 1100 Kg (2425 lb)

7.3 ASSEMBLY

The technicians LPE supply to the assembly of the equipment.
The LPE personnel need only two safety stepladder (one to 3 step - one to 5 step).

Duration the equipment assembly: 1 week

7.4 HOOK UP

The equipment hook up is performed by the Customer.

Special instruction: follow the **Facilities Specification** (**encl. B**)
After the completion of the hook up, the Customer should carry out the Facilities Check List and return it to LPE duly filled.

Personnel: one technician for electricity connections - minimum 2 days
one technician for water connections - minimum 2 days
one technician for gases connection - minimum 3 days
one technician for exhaust connection - minimum 2 days

Each technician must have appropriate tools.

START UP - TOOLS AND PERSONNEL REQUIREMENTS

The start up of equipment is supplied by technicians LPE.
The Customer can attend to the start up procedures, following the Instruction Manual.

Personnel: the Facilities and Gases Responsible must be found for all time the star up
one technicians for the quartz washing – minimum 1 day

Tools: quartz cleaning hood for acid
gases (in sufficient quantity)
wafers (in sufficient quantity)
wafer tweezers
wafer measure equipment

Duration start up: 1 week

ACCEPTANCE TEST – TOOLS AND PERSONNEL REQUIREMENTS

The Acceptance Tests are necessary to check that the EPI parameters, agreed upon during the acquisition phase of the equipment, are respected.

Personnel: EPI Responsible

Tools: gases (in sufficient quantity)
wafers (in sufficient quantity)
wafer measure equip

Duration acceptant test: depending of the acceptance criteria

TRAINING

The equipment installation does not require training to the Customer, since it is performed by LPE personnel.

Vice versa, at the first delivery, it is recommended a special training about how to operate on the Epitaxial Reactor.

Duration of the training: 1 week

Personnel: Operators
Process Engineers
Maintenance Teams
Supervisors

For the training it is requested one room with one board and one overhead projector.

During the training, the Epitaxial Reactor should be available, for direct demonstration.

The training program for the Epitaxial Reactor is divided into:

1.0) ***Operators***

Upon completion of this module *Operators* will be able to:

1.0) Run a recipe
1.1) Adjust a recipe
1.2 Move the lift and the front shield
1.3) Hold and Restart a recipe
1.4) Read the alarms page
1.5) Read the black box
1.6) Understand warning messages

2.0) ***Process Engineers***

Upon completion of this module the *Process Engineer* will learn how to:

2.1) Use the EPI editor
2.2) Create a recipe
2.2) Lock and unlock recipe lines
2.2) Modify an existing recipe
2.3) Set purge parameters
2.4) Set auto-editor parameters
2.5) Set executable a recipe

3.0) ***Maintenance Team***

Upon completion of this module the *Maintenance Team* will learn how to:

3.1) Use the maintenance programs
3.2) Consult the maintenance manual
3.2) Locate safety switches interlock
3.2) Follow the signals path
3.3) Set auto-editor parameters
3.5) Set executable a recipe

4.0) ***Supervisors***

Upon completion of this module the *Maintenance Team* will learn how to:
Use all features of the PE2061 software as in the above listed training items plus:

4.1) Modify reactor configuration
4.2) Change maintenance and process engineers password.
4.2) Modify purge parameters
4.2) Perform the temperature calibration
4.3) Change Rotation settings
4.4) Copy recipes and Configuration file.
4.5) Modify reactor options.

DRAWINGS LIST

DWG. RH5250.U11	vers. 04	PE 2061 S - Lay out
DWG. RH5250.U12	vers. 03	PE 2061 S - Access area
DWG. RH5250.U13	vers. 05	PE 2061 S - Panel cut out
DWG. RH5250.U14	vers. 03	PE 2061 S - Water/air connecting points
DWG. RH5250.U15	vers. 01	PE 2061 S - Process gas connecting points
DWG. RH5250.U16	vers. 02	PE 2061 S - Electrical power connections
DWG. RE 4196	vers. 01	Chlorosilane Bubbler

Note: the indicate dimensions of equipment are indicatives.
In particular the dimensions of monitor, UPS and Workstation, could be subjected to modification, according to models available on the market. Please to contact LPE before the delivery for dimensions confirmation.

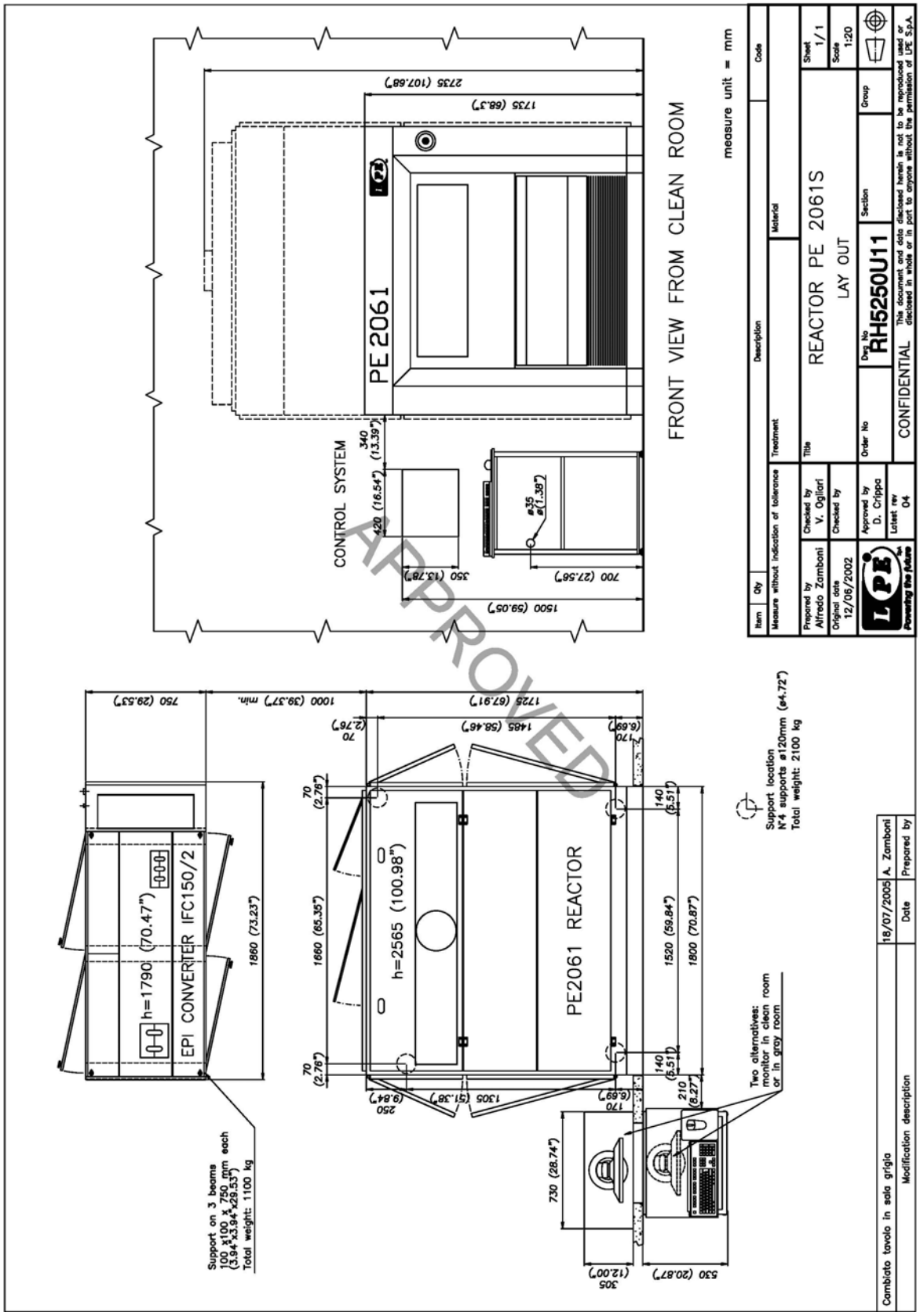
FRONT VIEW FROM CLEAN ROOM
measure unit = mm
PE 2061
CONTROL SYSTEM
2735 (107.68")
1735 (68.3")
1500 (59.05")
700 (27.56")
350 (13.78")
420 (16.54")
340 (13.39")
ø35 ø(1.38")
REACTOR PE 2061S
LAY OUT
RH5250U11
CONFIDENTIAL
This document and data disclosed herein is not to be reproduced used or disclosed in whole or in part to anyone without the permission of LPE S.p.A.
Prepared by Alfredo Zamboni
Checked by V. Ogliari
Approved by D. Crippa
12/06/2002
Sheet 1/1
Scale 1:20
APPROVED
EPI CONVERTER IFC150/2
h=1790 (70.47")
1860 (73.23")
750 (29.53")
1000 (39.37") min.
Support on 3 beams 100 x100 x 750 mm each (3.94"x3.94"x29.53") Total weight: 1100 kg
h=2565 (100.98")
PE2061 REACTOR
1725 (67.91")
1485 (58.46")
1660 (65.35")
1520 (59.84")
1800 (70.87")
1305 (51.38")
730 (28.74")
530 (20.87")
305 (12.00")
Support location N4 supports ø120mm (ø4.72") Total weight: 2100 kg
Two alternatives: monitor in clean room or in gray room
Cambiato tavolo in sala grigia
18/07/2005
A. Zamboni
Modification description
Date
Prepared by

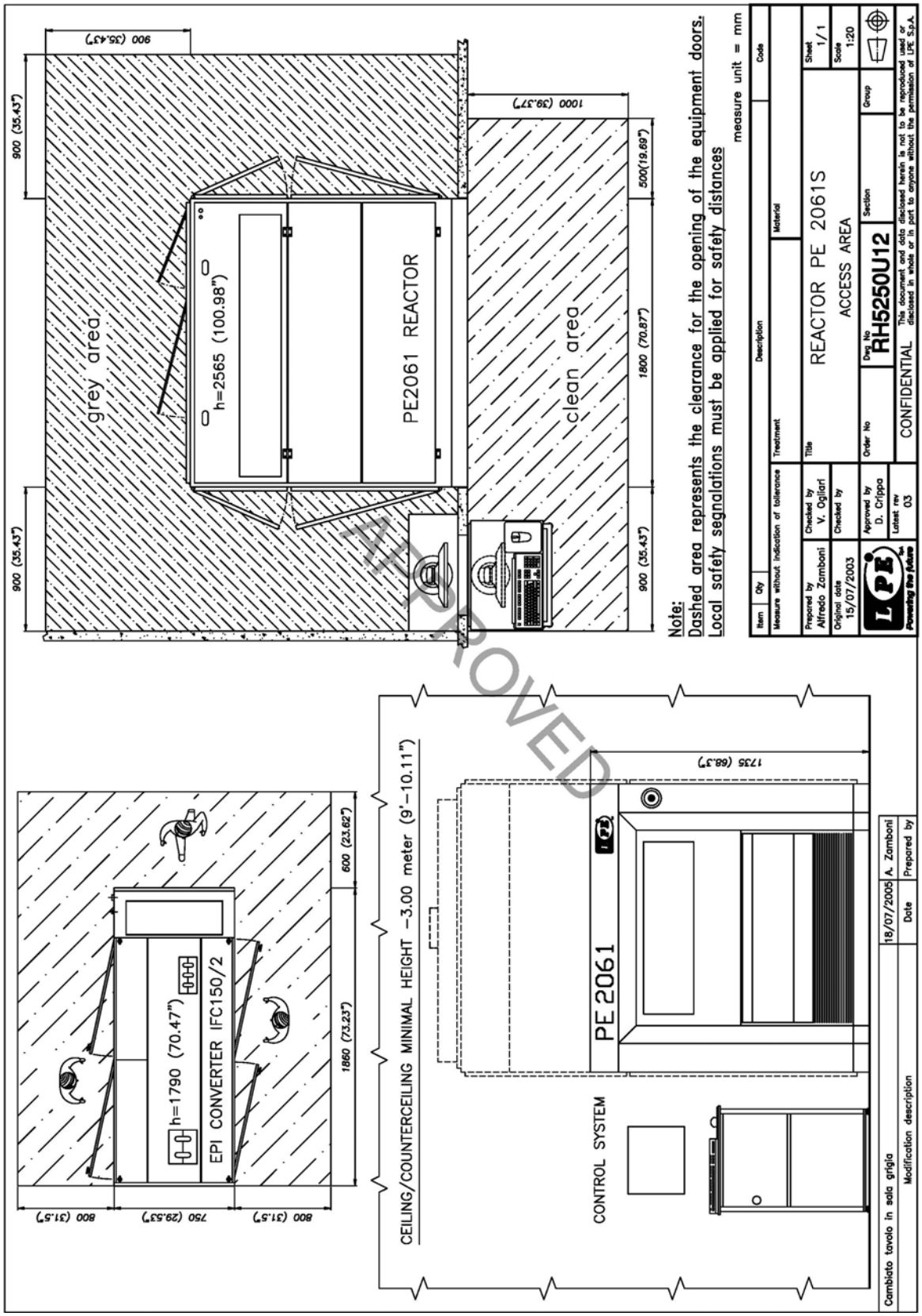
grey area
h=2565 (100.98")
PE2061 REACTOR
clean area
900 (35.43")
900 (35.43")
900 (35.43")
1000 (39.37")
500(19.69")
1800 (70.87")
900 (35.43")
Note:
Dashed area represents the clearance for the opening of the equipment doors.
Local safety segnalations must be applied for safety distances
measure unit = mm
Item
Qty
Description
Code
Measure without indication of tollerance
Treatment
Material
Prepared by
Alfredo Zamboni
Checked by
V. Ogliari
Checked by
Original date
15/07/2003
Approved by
D. Crippa
Latest rev
03
Title
REACTOR PE 2061S
ACCESS AREA
Sheet
1/1
Scale
1:20
Order No
Dwg No
RH5250U12
Section
Group
CONFIDENTIAL
This document and data disclosed herein is not to be reproduced used or disclosed in whole or in part to anyone without the permission of LPE S.p.A.
APPROVED
h=1790 (70.47")
EPI CONVERTER IFC150/2
800 (31.5")
750 (29.53")
800 (31.5")
1860 (73.23")
600 (23.62")
CEILING/COUNTERCEILING MINIMAL HEIGHT -3.00 meter (9'-10.11")
PE 2061
1735 (68.3")
CONTROL SYSTEM
Cambiato tavolo in sola griglia
18/07/2005
A. Zamboni
Modification description
Date
Prepared by

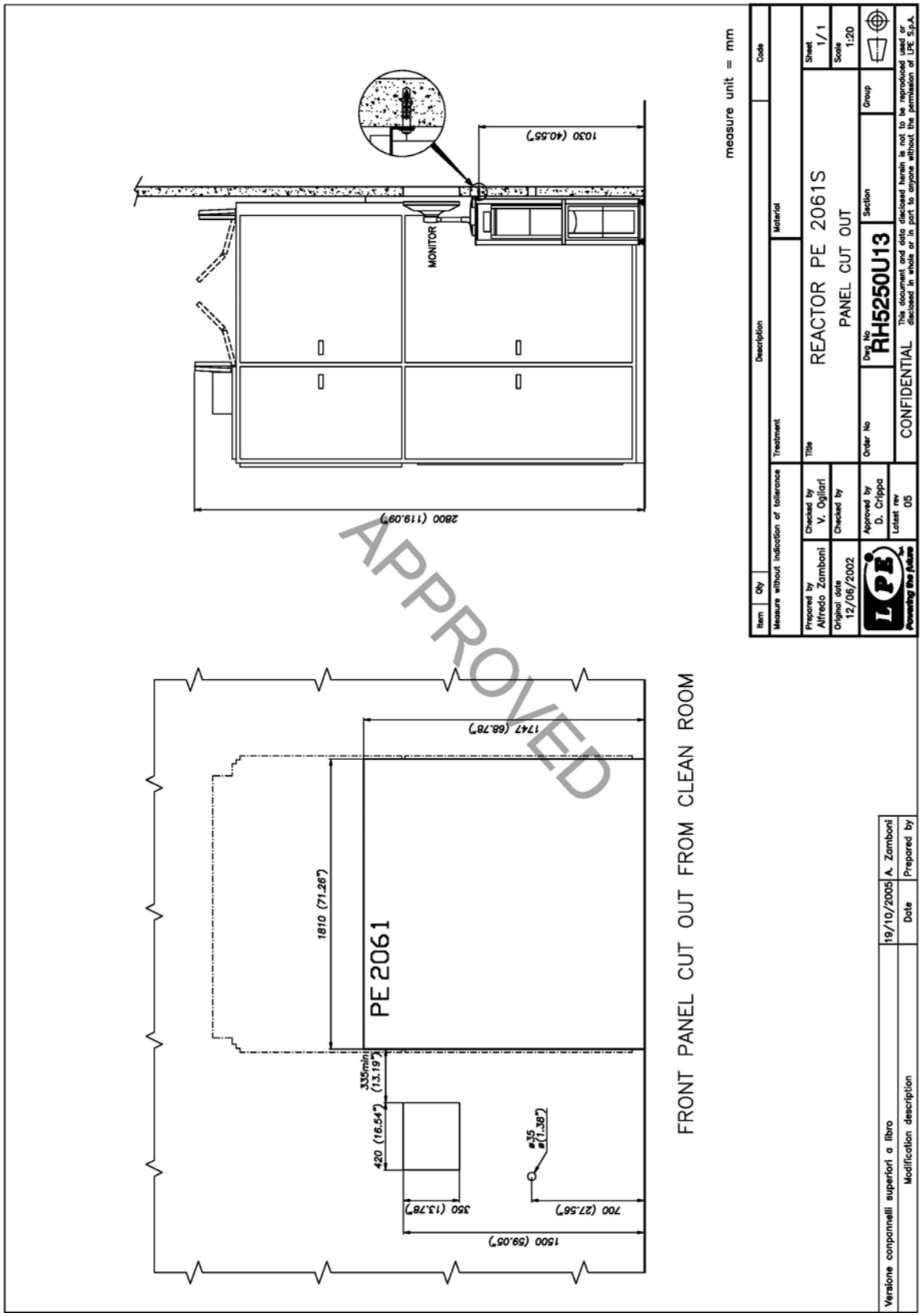
APPROVED
MONITOR
1030 (40.55")
2800 (119.09")
1747 (68.78")
1810 (71.26")
PE 2061
335min (13.19")
420 (16.54")
ø35 ø(1.38")
350 (13.78")
700 (27.56")
1500 (59.05")
FRONT PANEL CUT OUT FROM CLEAN ROOM
measure unit = mm
Item
Qty
Description
Code
Measure without indication of tolerance
Treatment
Material
Prepared by Alfredo Zamboni
Checked by V. Ogliari
Approved by D. Crippa
Sheet 1/1
Scale 1:20
Original date 12/06/2002
Checked by
Latest rev 05
Title
REACTOR PE 2061S
PANEL CUT OUT
Order No
Dwg No RH5250U13
Section
Group
CONFIDENTIAL
This document and data disclosed herein is not to be reproduced used or disclosed in whole or in part to anyone without the permission of LPE S.p.A.
Versione componenti superiori a libro
19/10/2005 A. Zamboni
Modification description
Date
Prepared by

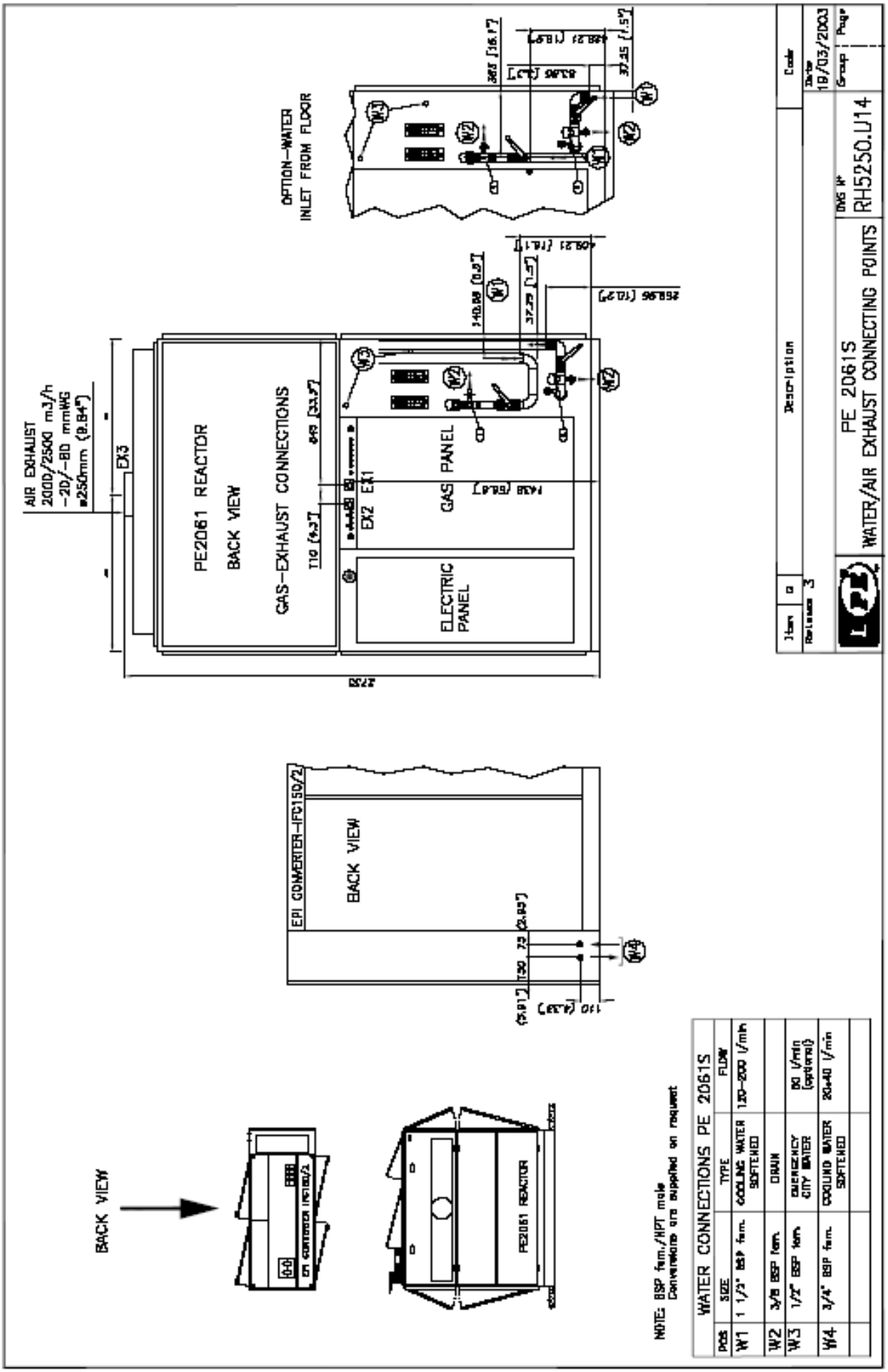
AIR EXHAUST
200D/2500 m3/h
-20/-80 mmWG
ø250mm (9.84")
EX3
PE2061 REACTOR
BACK VIEW
GAS-EXHAUST CONNECTIONS
EX2 EX1
GAS PANEL
ELECTRIC PANEL
OPTION-WATER INLET FROM FLOOR
EPI CONVERTER-IFC150/2
BACK VIEW
BACK VIEW
PE2061 REACTOR
NOTE: BSP fem./NPT male
Connections are supplied on request
WATER CONNECTIONS PE 2061S
POS SIZE TYPE FLOW
W1 1 1/2" BSP fem. COOLING WATER SOFTENED 120-200 l/min
W2 3/8 BSP fem. DRAIN
W3 1/2" BSP fem. EMERGENCY CITY WATER 80 l/min (optional)
W4 3/4" BSP fem. COOLING WATER SOFTENED 20-40 l/min
Item 0
Release 3
Description
Code
Date 18/03/2003
Group
Page
DWG N° RH5250.U14
PE 2061S
WATER/AIR EXHAUST CONNECTING POINTS

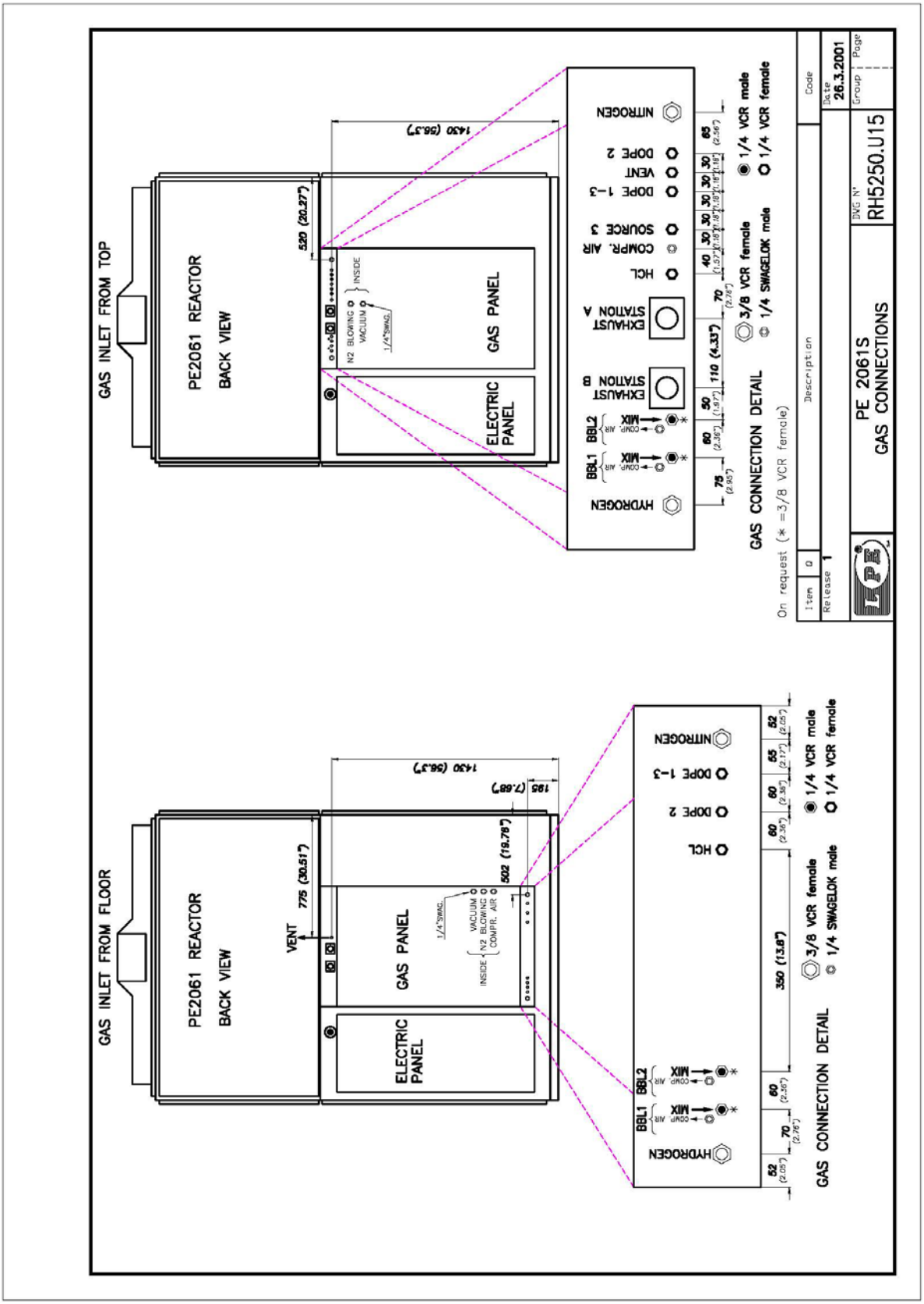
GAS INLET FROM TOP
PE2061 REACTOR
BACK VIEW
520 (20.27")
1430 (56.3")
N2 BLOWING
VACUUM
INSIDE
1/4"SWAG.
GAS PANEL
ELECTRIC PANEL
NITROGEN
DOPE 2
VENT
DOPE 1-3
SOURCE 3
COMPR. AIR
HCL
EXHAUST STATION A
EXHAUST STATION B
BBL2
BBL1
MIX
COMP. AIR
HYDROGEN
GAS CONNECTION DETAIL
3/8 VCR female
1/4 SWAGELOK male
1/4 VCR male
1/4 VCR female
On request (* =3/8 VCR female)
Item
Release
Description
Code
Date
26.3.2001
Group
Page
DWG N°
RH5250.U15
PE 2061S
GAS CONNECTIONS
GAS INLET FROM FLOOR
PE2061 REACTOR
BACK VIEW
VENT
775 (30.51")
1430 (56.3")
185 (7.68")
502 (19.78")
GAS PANEL
ELECTRIC PANEL
VACUUM
N2 BLOWING
COMPR. AIR
INSIDE
1/4"SWAG.
NITROGEN
DOPE 1-3
DOPE 2
HCL
350 (13.8")
HYDROGEN
GAS CONNECTION DETAIL
3/8 VCR female
1/4 SWAGELOK male
1/4 VCR male
1/4 VCR female

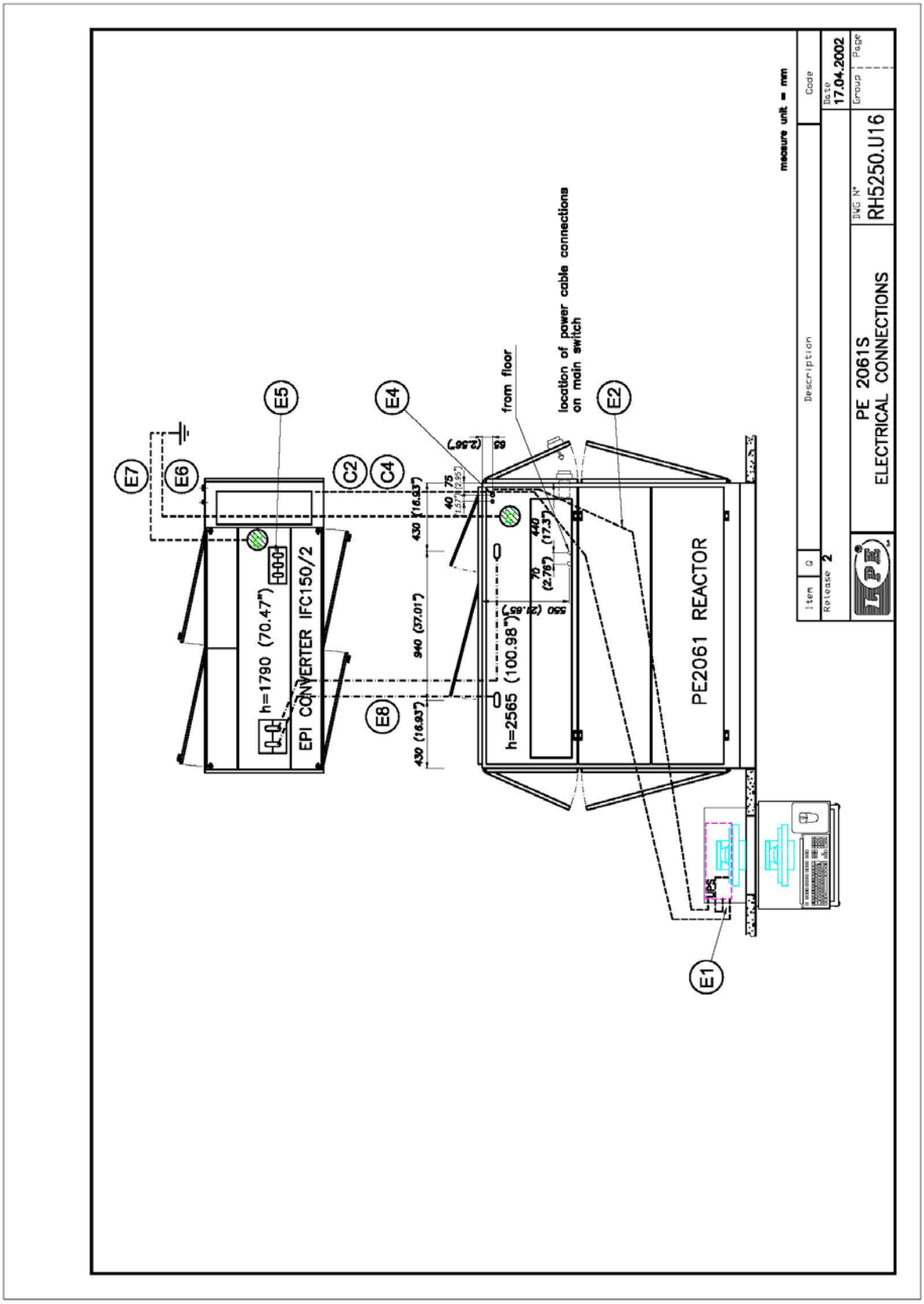
E7
E6
E5
C2
C4
E4
E8
E2
E1
h=1790 (70.47")
EPI CONVERTER IFC150/2
h=2565 (100.98")
PE2061 REACTOR
UPS
from floor
location of power cable connections on main switch
430 (16.93")
940 (37.01")
430 (16.93")
40 (1.57")
75 (2.95")
65 (2.56")
440 (17.3")
70 (2.76")
550 (21.65")
measure unit = mm
Item
Release 2
Description
Code
Date 17.04.2002
Group
Page
PE 2061S
ELECTRICAL CONNECTIONS
DWG N°
RH5250.U16

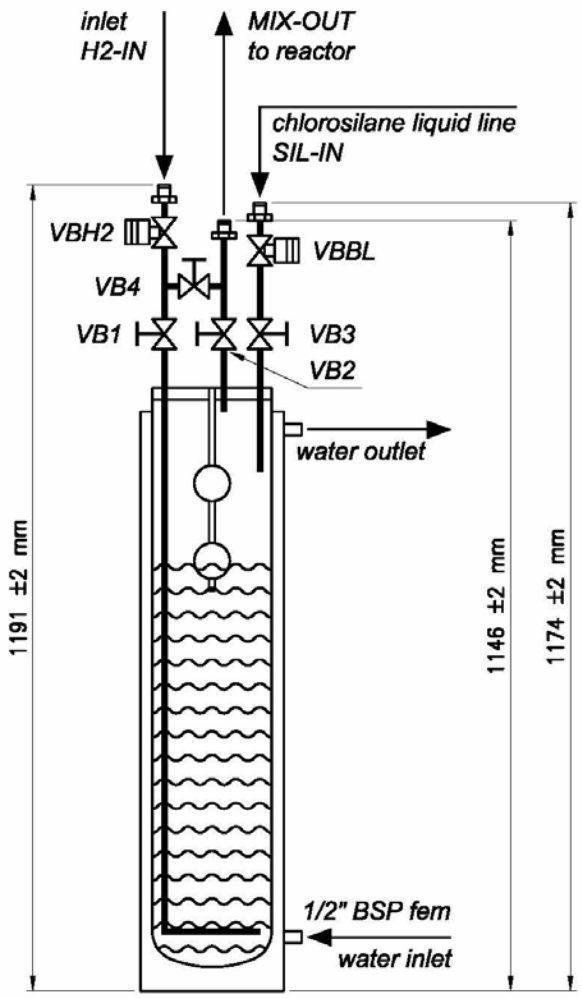

Internal cabinet size - minimal
300 x 300 mm footprint
1500 mm height

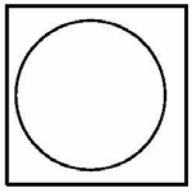

Rev.	Modification description	Date	Prepared by
01	Aggiunta valvola N.C. sulla linea H2 IN	31/08/2007	A. Zamboni

bellow pneumatic valve | *manual packless valve - 1/4 turn* | *VCR male*

Item	Qty	Description	Code

Measure without indication of tollerance	Treatment	Material

Prepared by	Checked by	Title	Sheet
Alfredo Zamboni	V.O.	CHLOROSILANE BUBBLER Minispeed model 4 liters – Std model 14 liters Code N° 26G701 Code N° 16G702	1/1
Original date 17/04/2002	Checked by N.S.		Scale 1:1
	Approved by D.C.	Order No / Dwg No RE4196 / Section / Group	
	Latest rev 01	CONFIDENTIAL	

This document and data disclosed herein is not to be reproduced used or disclosed in whole or in part to anyone without the permission of LPE S.p.A.

FACILITIES SPECIFICATIONS

⚠ATTENTION
It is the Customer's responsibility to supply facilities according to the following specification and deliver them to the reactor, routing the tubes/cables of specified size and material to the connecting points indicated below or in the quoted drawings.

B.1 FACILITIES SCHEMATIC DIAGRAM

The Facilities to be connected to the Reactor system, are described in the following general schematic diagram and table.

B.1.1 Symbol legend

En	Electrical connections
Cn	Signal connections
Wn	Water connections
Gn	Gas connections
EXn	Exhaust connections
Sn	Other service connections

Standard connections
Optional connections
Standard SIGNAL connections
Optional SIGNAL connections

B.1.2 General diagram

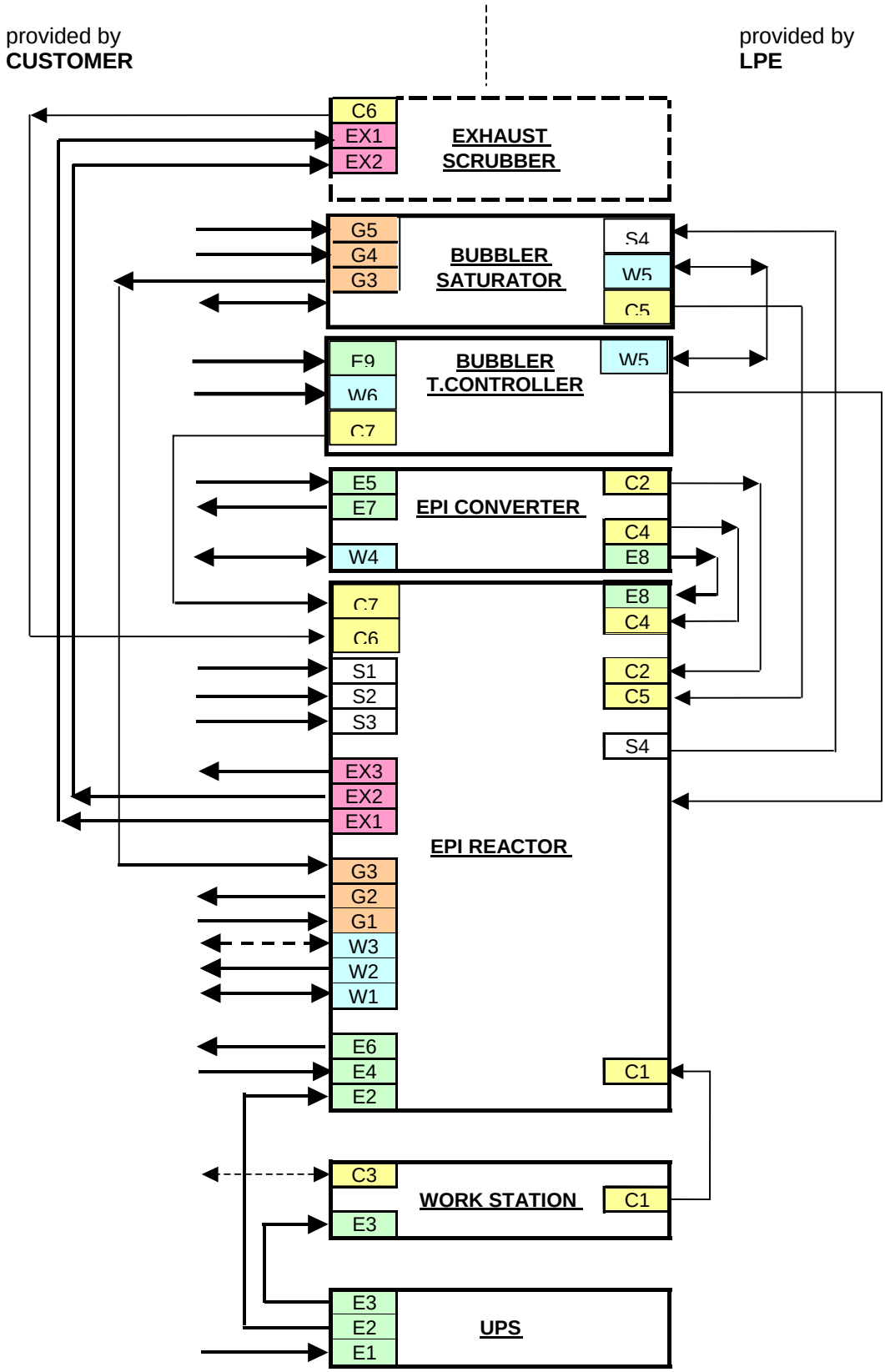

B.1.3 Diagram description

Item	Description	Prov.	Connection	Note	Ref. DWG
E1	Inlet line to UPS	Cust	plug		RH5250U16
E2	UPS to Reactor line	Cust	plug - cable		RH5250U16
E3	UPS to WS line	LPE	plug - plug		RH5250U16
E4	in Reactor power lines	Cust	cable		RH5250U16
E5	in Generator power line	Cust	cable		RH5250U16
E6	Reactor ground line	Cust	cable terminal - dia 10 mm		RH5250U16
E7	Generator ground line	Cust	cable terminal - dia 10 mm		RH5250U16
E8	coaxial cables	LPE			RH5250U16
E9	Bubbler T.controller power supply	LPE	plug - cable		RH4836E
C1	Reactor - WS interface line	LPE			RH4847E
C2	Reactor - Generator interface line	LPE			RH4847E
C3	SECS interface line	Cust	conn. type D male 25 pin	optional - use a cable 25core/screened	RH4847E
C4	Reactor- Generator emergency signal	LPE			RH4847E
C5	Reactor - Bubbler signal line	Cust	cable	use a cable 4core - 0,5 mm^2- provided 4 mt. near Reactor	RH4847E
C6	inlet Scrubber line - **dry contact**	Cust	cable	use a cable 2core - 0,5 mm^2- provided 4 mt. near Reactor	RH5250U16
C7	Bubbler T,Controller out of range	Cust	Cust	use a cable 2core -0,5 mm^2	RH4836E
W1	Reactor cooling water	Cust	1 ½" BSP female (NPT male)		RH5250U14
W2	Drain for circuit emptying	Cust	3/8" female		RH5250U14
W3	Reactor emergency water	Cust	1/2" BSP female (NPT male)	optional	RH5250U14
W4	Generator cooling water	Cust	3/4" BSP female (NPT male)		RH5250U14
W5	Bubbler cooling water	Cust	1/2" BSP female		RE4196
W6	Bubbler T.Controller cooling water	Cust	3/8" swagelok		RH4840U1
G1	in process gas	Cust	see connection scheme		RH5250U15
G2	Vent line	Cust	1/4" VCR female		RE4196
G3	mix from Bubbler to Reactor	Cust	see connection scheme		RH5250U15 and RE4196
G4	Inlet Chlorosilane liquid to Bubbler	Cust	1/4" VCR male		RE4196
G5	in H2 to Bubbler	Cust	1/4" VCR female		RE4196
EX1	out exhaust gas station A	Cust	1 ¼"		RH5250U14
EX2	out exhaust gas station B	Cust	1 ¼"		RH5250U14

EX3	out exhaust air	Cust	dia 250 mm		RH5250U14
S1	in compress air	Cust	1/4” swagelok		RH5250U15
S2	in vacuum for wafer tweezers	Cust	1/4” swagelok		RH5250U15
S3	Nitrogen blowing	Cust	1/4” swagelok		RH5250U15
S4	Pneumatic connection from Reactor to Bubbler valve	LPE	1/8” plastic tube		RH5040U1

B.2 ELECTRIC POWER SUPPLY

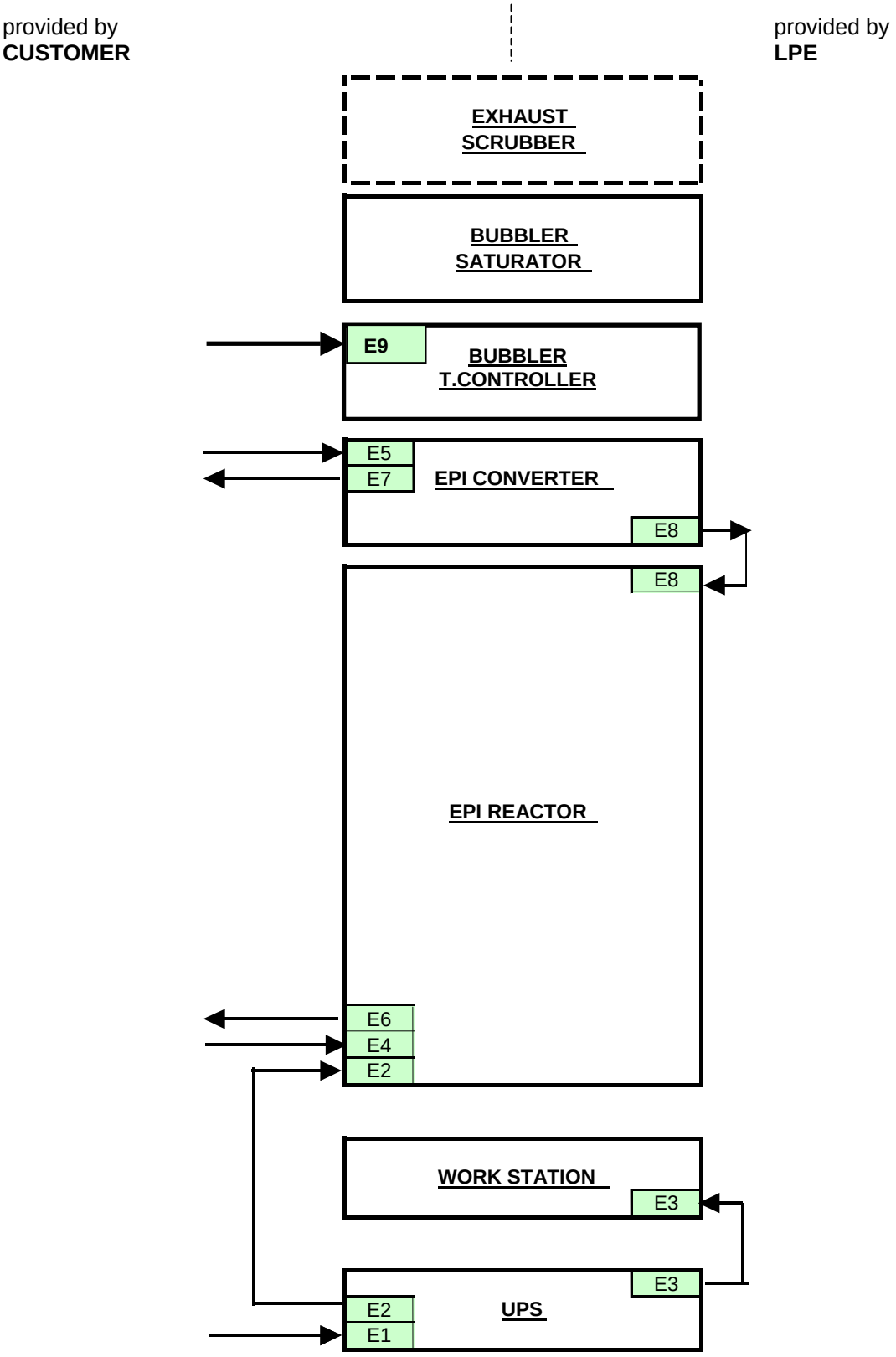

B.2.1 Technical data

The Customer is responsible for connecting the electric cables from Factory facility to reactor, protecting the power lines and providing efficient grounding.

E1 Inlet line to UPS

Description:

115 VAC - ± 5% - single ph + N - 60 cycles (1) (2)
power rating: 2.2 KVA - 20 Amp/ph
wire: size in according with local code (4)
the Customer will provide the adequate line overload protection

Note: Uninterruptible Power Supply rated at 2,2 KVA approx. should sustain the workstation and reactor electronics for approx. 15 minutes

Connecting points: (on workstation table) ref. **dwg. RH 5250.U16**

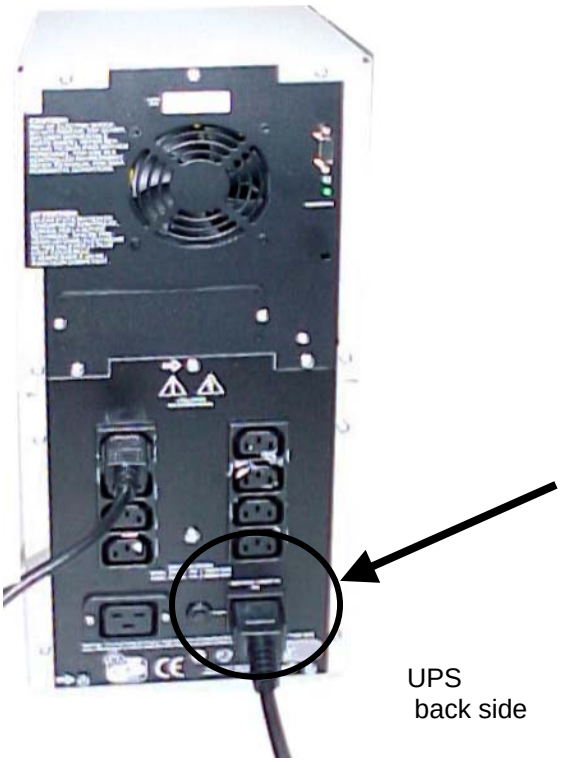

UPS
back side

E2 UPS to Reactor line

Description:

the Customer supplies only the cable suitable for power rating 0,7 KVA - 6 Amp (115 VAC - ± 5% - single ph + N).

Wire passage from bottom, inside the electronic cabinet

Connecting points: ref. **dwg. RH 5250.U16**

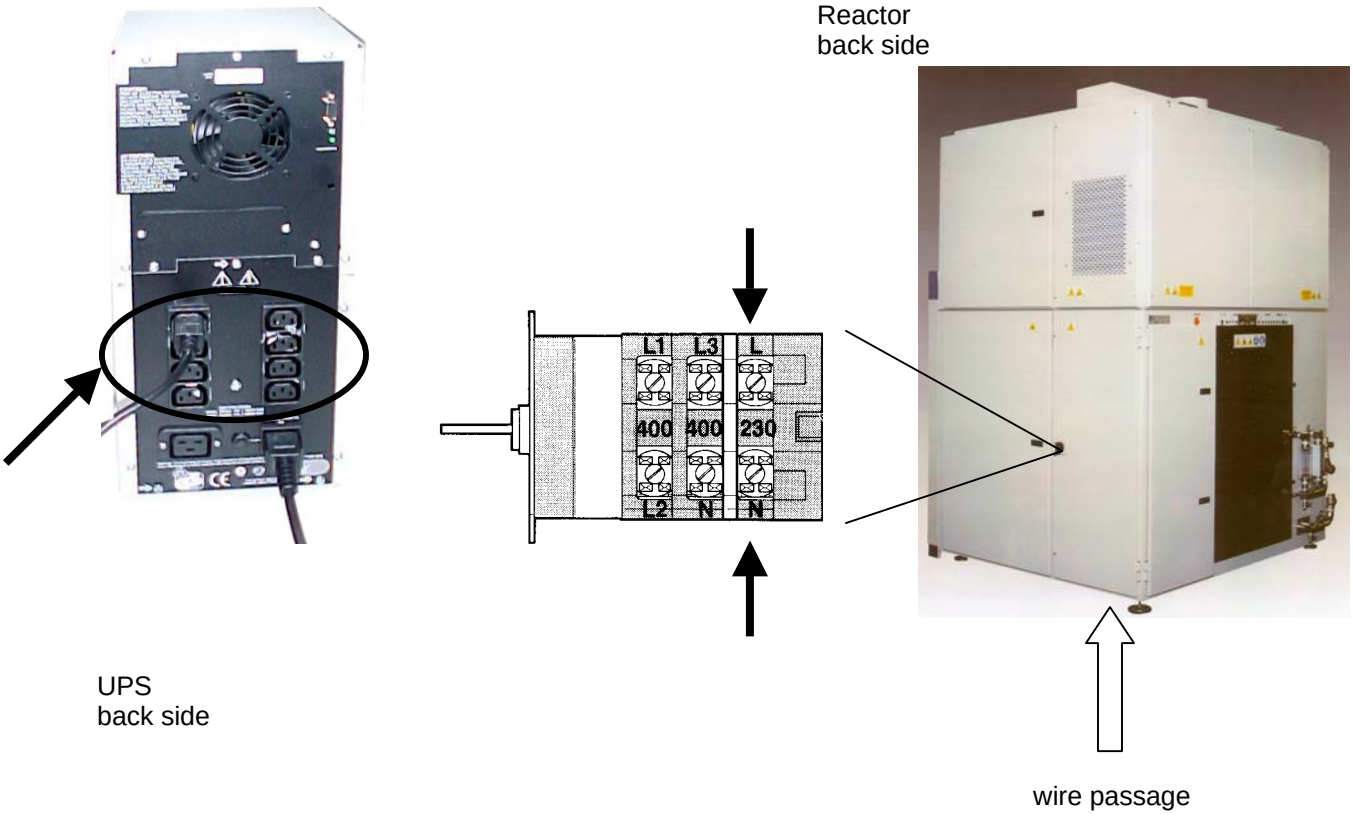

E3 UPS to WS line

Description:

Wire and connection provided by LPE personnel - power rating 0,5 KVA - 4 Amp (115 VAC - ± 5% - single ph + N).

E4 in Reactor power lines

Description:

480 VAC - ± 5% - 3 ph - 60 cycles (1) (2)
power rating 5,5 KVA - 8 Amp/ph
wire: size in according with local code (4)
the Customer will provide the adequate line overload protection (3)

Wire passage: at Customer choice, from bottom (inside the electronic cabinet) **or** from top, trough the wire-passages

Connecting points: ref. **dwg. RH 5250.U16**

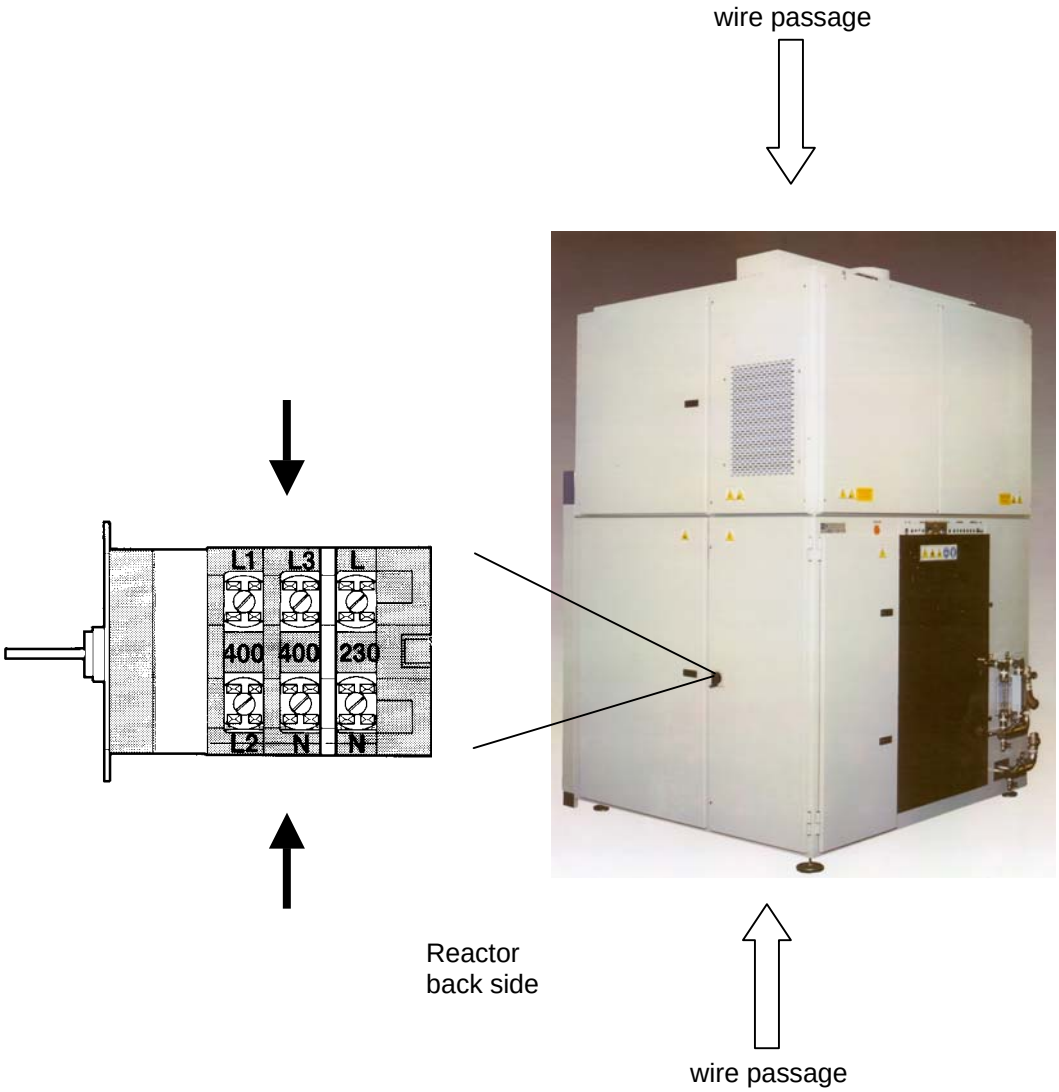

E5 in Generator power line

Description:

480 VAC - ± 5% - 3ph (without neutral) - 60 cycles (1) (5)
absorbed power rated load 300 KVA - 430 Amp/ph
absorbed power rating 130 KVA - 160 Amp/ph
absorbed power peak during warm-up 220 KVA - 260 Amp/ph
wire: copper cable - size in according with local code (4)
the Customer will provide the adequate line overload protection

Wire passage: from top, above main switch

Connecting points: ref. **dwg. RH 5250.U16**

wire passage

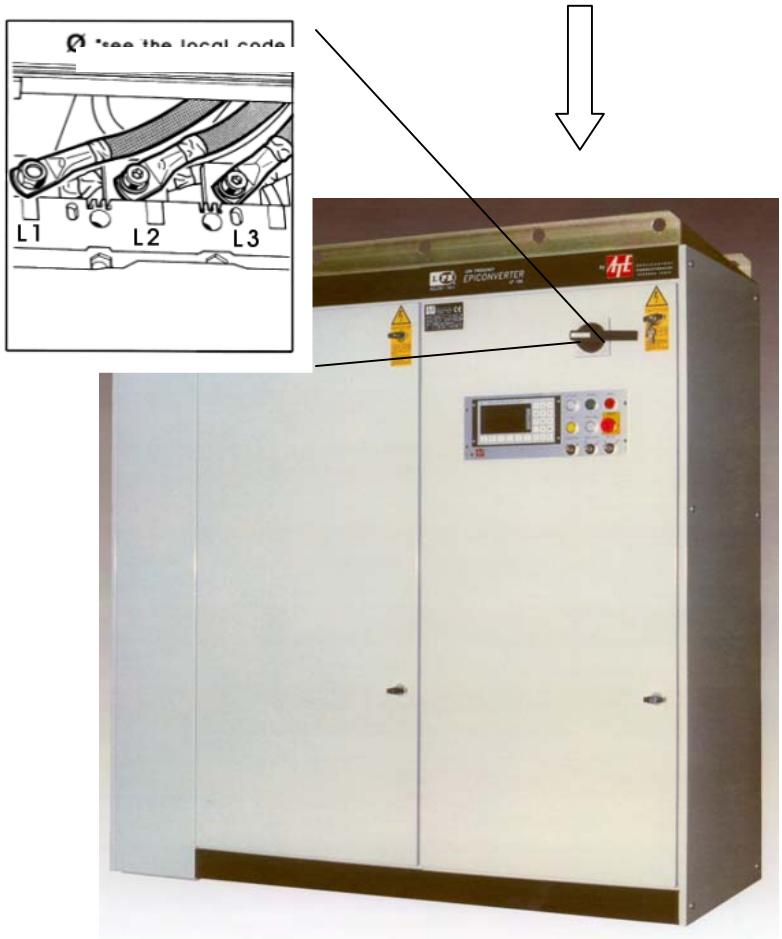

Generator
(Epiconverter)
front side

E6 Reactor ground line

Description:
cable routed to PE connection points ONLY
wire: copper cable - size minimum 75 sqmm (4) (6)

Connecting points: ref. **dwg. RH 5250.U16**

at Customer choice, two possible connection PE points (top **or** bottom)

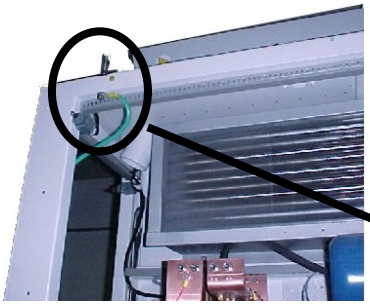

TOP
ground connection

BOTTOM
ground connection

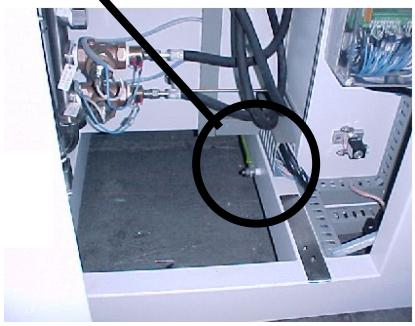

E7 Generator ground line

Description:

cable routed to PE connection points ONLY
wire for Epiconverter: copper cable - size min. 150 sqmm (4) (6)

Wire passage: from top, above main switch

Connecting points: ref. **dwg. RH 5250.U16**

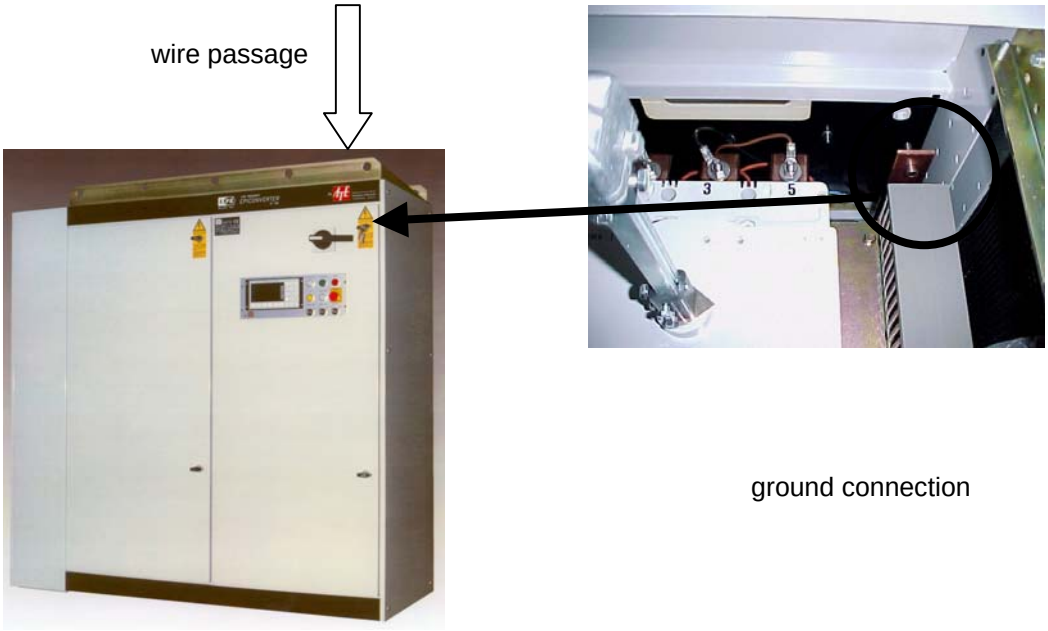

Note:

(1) Other voltages and line frequency available on request

(2) It is recommended to power the reactor through a separated line from the other equipment present in the epi-department, with the insulated transformer.

(3) When the blower motor is switched on, the supply line #1 has a current peak 4 times greater than rated current under steady conditions

(4) The Epitaxial Reactor PE2061S comply the Directive EMC 89/336/EEC. Special attention however is required in the cables arrangement, to fulfill the EMC. LPE recommends the laying of the Epiconverter power supply cables to a closed ventilated metal raceways, grounded at the both ends and to use the Reactor power supply screened cables, with screen connects to ground. Power cables and signal cables may lay in the separate raceway. Ground cables should be apart from power cables.
The coaxial cables (LPE supply), must be routed through enclosed ventilated metal raceways (Customer supply), grounded at the two ends. Only the coaxial cables may lay in to the raceway.

(5) The Customer's power supply system should take note of the maximum rated (300 KVA) for the sizing of main input trafo and, if possible, connect only reactor to main input trafo. The generator automatically compensate the power factor to a value around 0.9; so, further power factor correction system on line supply should be carefully sized.

(6) The ground cable is oversize respects the International Electrical Code. It is necessary this section to drain the radio-frequency noise (EMC Directive).

E8 coaxial cables

The coaxial cables are supplied and installed by LPE.
The Customer should supply enclosed ventilated metal raceways (conduit) where to run the cables.
Metal raceway should be grounded at Customer care at both ends.
Only the coaxial cables (no signal cables) may lay in to the raceway.

The Epitaxial Reactor PE2061S comply the EMC Directive. Special attention however is required in the coaxial cables arrangement.

Note: attention should be paid to cable curves radius

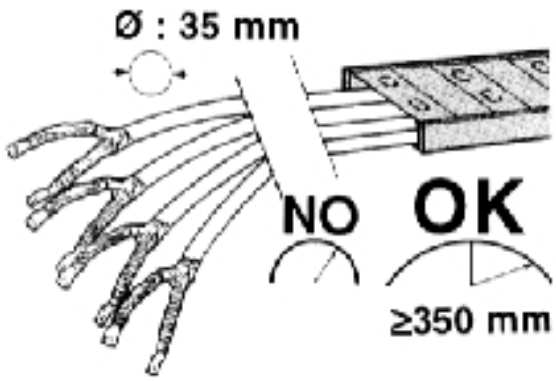

Weight: 2.3 Kg/linear meter
Dia: 35 mm
Curve minimum radius: 350 mm

E9 Lpe Bubbler Thermal Controller

Description:

230 VAC - ± 10% - single phase + N +PE 50 /60Hz
power rating: 600W
wire: size in according with local code
the Customer will provide the adequate line overload protection

Connecting points: ref. **dwg. RH 4836E**
Female connector supplied from LPE

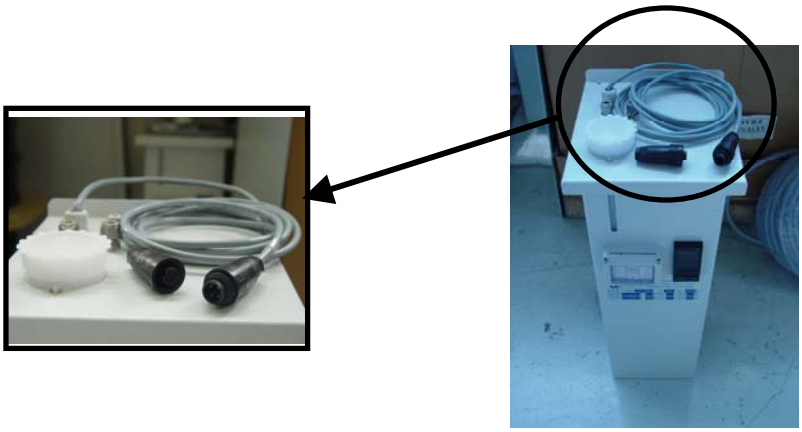

B.3 COOLING WATER

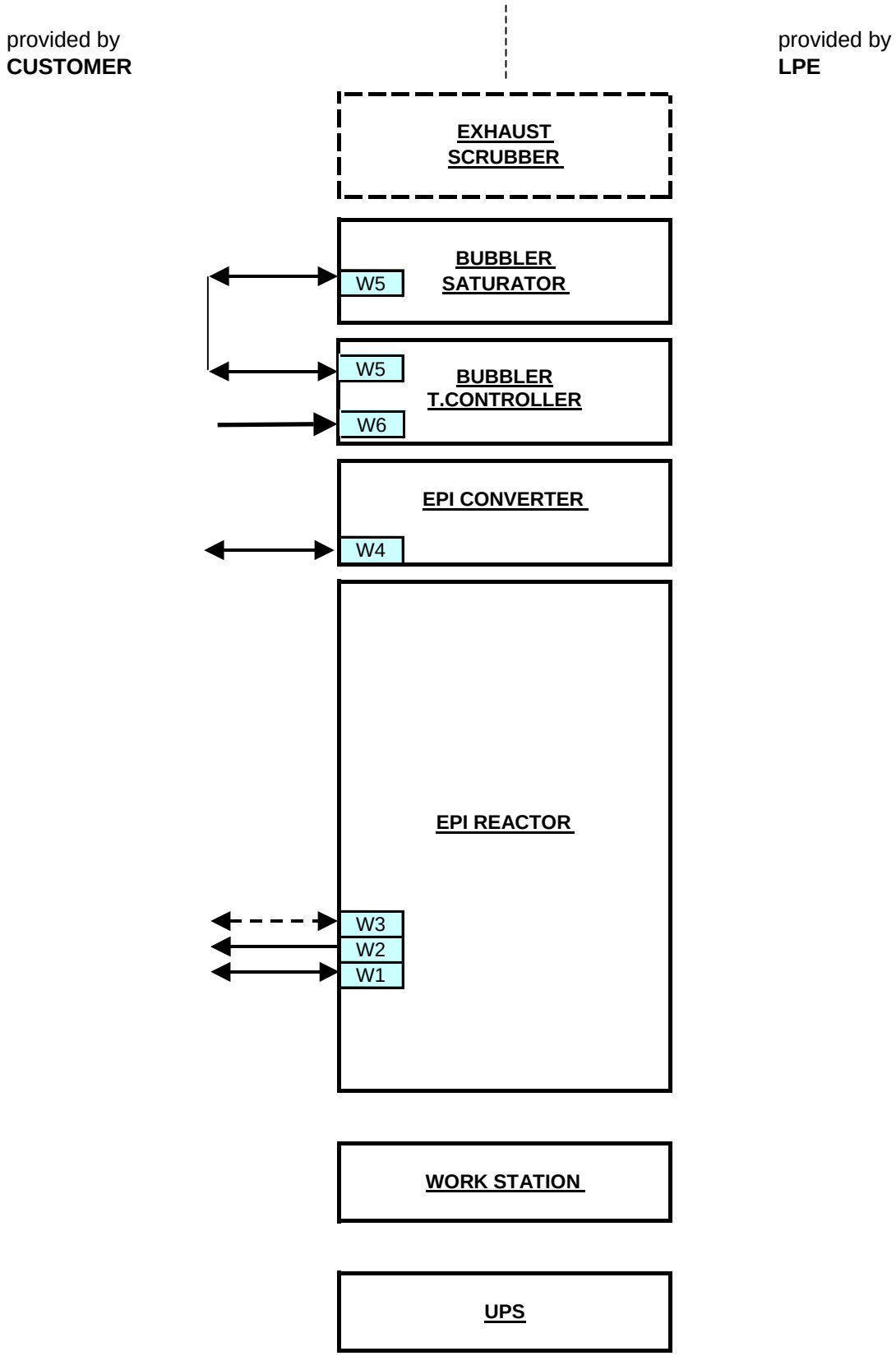

B.3.1 Technical data

W1 Reactor cooling water

Description:

When operating, the Epi Reactor requires water cooling capacity of 60-100,000 Kcal/h, depending on process temperature and duty cycle. Cooling water should be good quality, lime free, preferably treated (softened *) and with a closed-loop circuit, to prevent scaling.
On the water inlet, it is installed a mesh filter. To prevent the entry of the fragments, due to the first connection of Factory water lines.
In case of dirty waters, it is recommended the insertion of a closed packed filter (250÷500 μ)
If necessary, LPE can supply a proper water/water heat-exchanger for the system.

Note: (*) Suggested - hardness: 120 mg/l ; pH: 6 ÷ 8 ; electrical resistivity: 20,000 Ωcm

Total flow	:	200 l/min (inside the reactor the flow is split between: ▪ flow # 1 - air/water heat exch.:25 ÷ 100 l/min depending on automatic regulating valve demand ▪ flow # 2 - mechanics: 80 ÷ 100 l/min depending on water temperature and restrain setting)	
Pressure	:	max.	600 KPa (6 bar)
		min.	300 KPa (3 bar)
Pressure drop across reactor	:	min.	250 KPa (2.5 bar)
		recomm.	350 KPa (3.5 bar)
Temperature	:	min.	19 °C
		recomm.	20 ÷ 22 °C
		max.	25 °C
Tubing	:	st.st. AISI 304 or PE (plastic)	- recommended
		galvanized steel	- allowed
		black iron	- not allowed

The pipe diameter and the shut off valves at any point of the circuit must be of the same size or larger than the relevant connections. Drain valves must be connected to a drain when the reactor has to be emptied.

Connection: ref. **dwg. RH 5250.U14**

Connection size : 1 ½" BSP female

Standard inlet/outlet

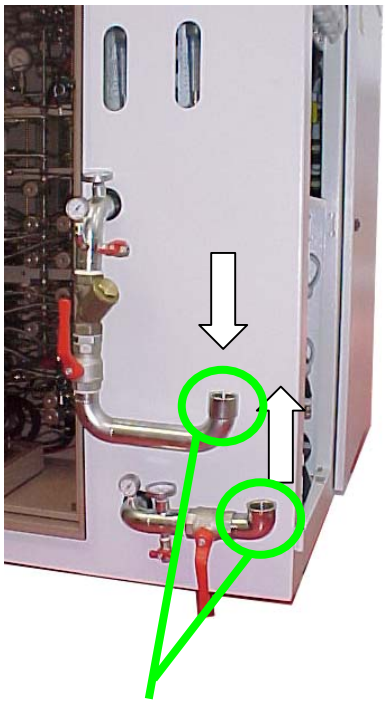

BSP fem./NPT male conversion available on request

Reactor back side

Floor inlet/outlet (option)

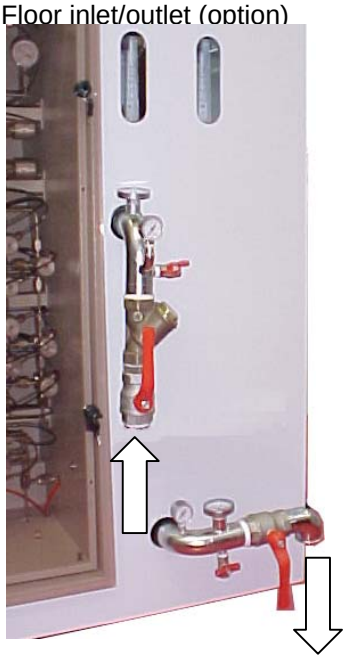

W2 Drain for circuit emptying

Connection: ref. **dwg. RH 5250.U14**

Connection size : 3/8" female

Reactor back side

W3 Reactor emergency water

Description:

If a power failure occurs in the water system, the cooling reactor may stop, and the induction coils may risk overheating and damage. To avoid this risk, we recommend to install a emergency water system.
Water supply for emergency purposes must be an independent and uninterruptable water source such as tap water, city water, elevated reservoir tank, etc.
The LPE emergency water system (optional), operates when the Reactor Customer power supply (400V) fails (for detail, please consult LPE technician).

Pressure	:	300 ÷ 400 KPa (3-4 bar)
Temperature	:	below 35 °C
Flow	:	30 ÷ 50 l/min. for at least 10 minutes
Drain	:	to factory sump

Connection: ref. **dwg. RH 5250.U14**

Connections size : 1/2" BSP female

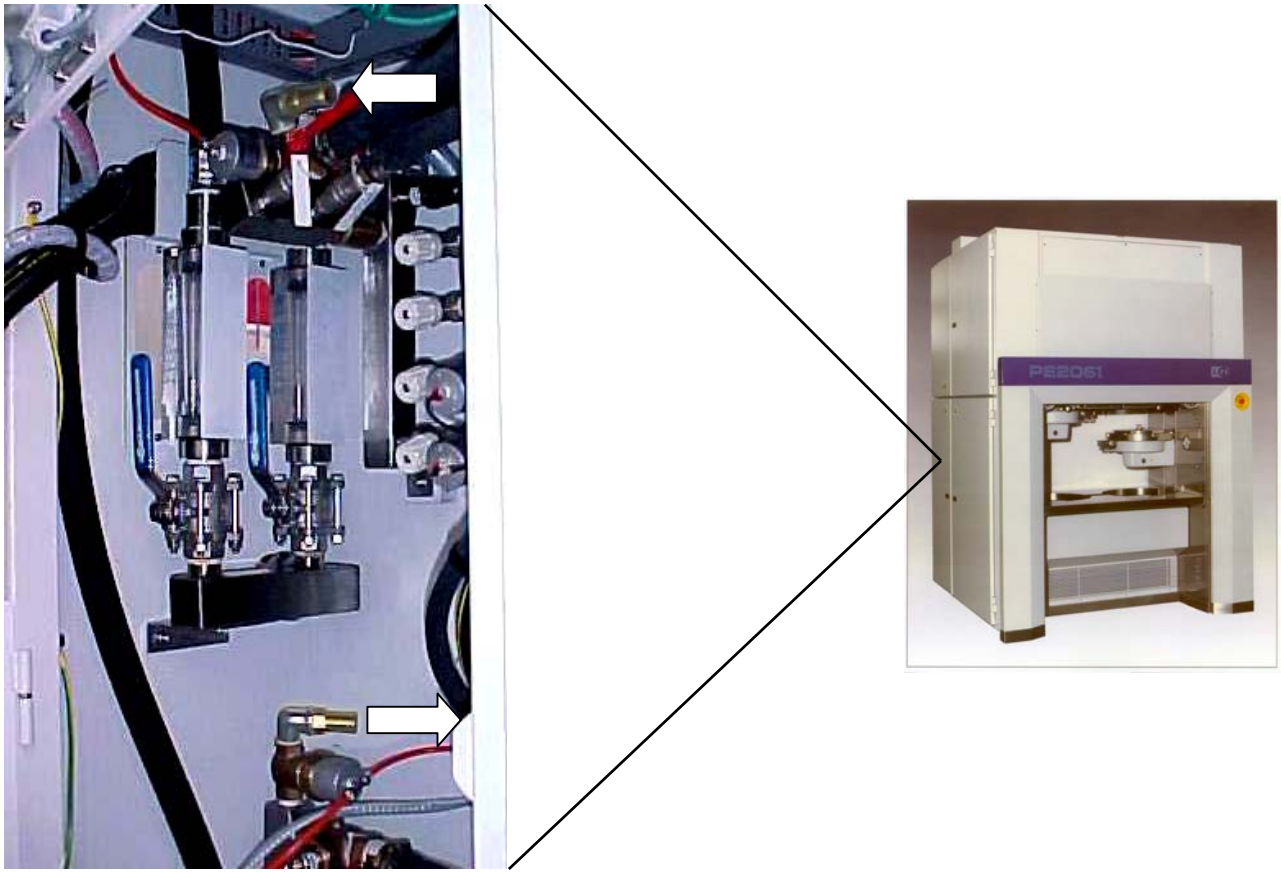

W4 **Generator cooling water**

Description:

Cooling water should be good quality, lime free, preferably treated (softened *) and with a closed-loop circuit, to prevent scaling

Note: (*) Suggested - hardness: 120 mg/l ; pH: 6 ÷ 8 ; electrical resistivity: 20,000 Ωcm

Total flow	:	40 l/min		
Pressure	:	max.	600 KPa (6 bar)	
		min.	300 KPa (3 bar)	
Pressure drop across reactor	:	min.	250 KPa (2.5 bar)	
		recomm.	350 KPa (3.5 bar)	
Temperature	:	min.	14 °C	
		recomm.	18 ÷ 20 °C	
		max.	25 °C	
Tubing	:	st.st. AISI 304 or PE (plastic)	-	recommended
		galvanized steel	-	allowed
		black iron	-	not allowed

Connection: ref. **dwg. RH 5250.U14**

connections size : 3/4" BSP female

Generator
back side

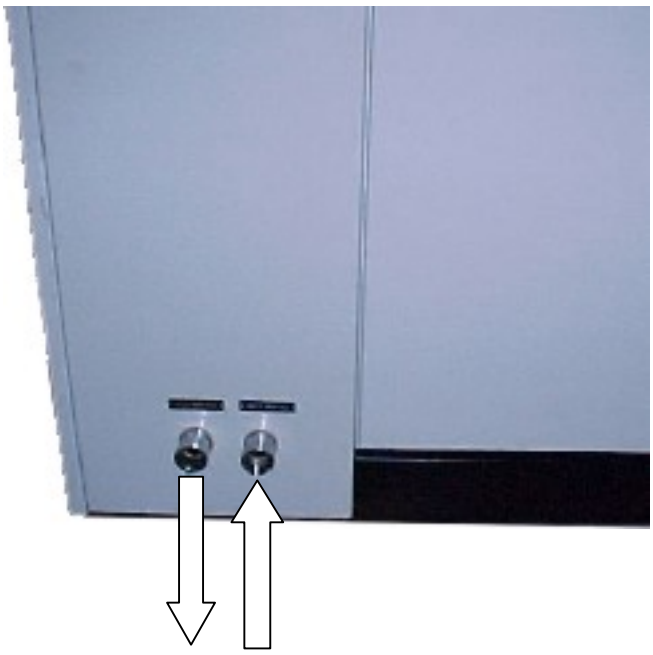

W5 **Bubbler cooling / Thermostatic system**

Description:

The bubbler requires water circulation through a water jacket to maintain chlorosilane at constant temperature (around 18 ÷ 22 °C.).
This could be supplied by the Factory cooling water manifold (provided the water temperature is stable within +/- 1°C tolerance range), or alternatively.
A thermostatic bath with circulation pump must be installed - please require to LPE the detailed specifications.

Pressure	:	50 ÷ 500 KPa (0.5 ÷ 5 bar)
Temperature	:	range 18 ÷ 23 °C
Flow	:	5 ÷ 25 l/min.

Connection: ref. **dwg. RE4196**

connections size	:	1/2" BSP female

to thermal controller
(TC4840 – optional)

from thermal controller

W6 **LPE Bubbler Thermal Controller**

Description:

The LPE Bubbler Thermal Controllers requires a minimum quantity of cooling water .

Pressure	:	50 ÷ 500 KPa (0.5 ÷ 5 bar)
Temperature	:	range 18 ÷ 23 °C
Flow	:	1.5 ÷ 2 l/min.
Connection	:	ref. **dwg. RH4840U1**
connections size	:	3/8" swagelock

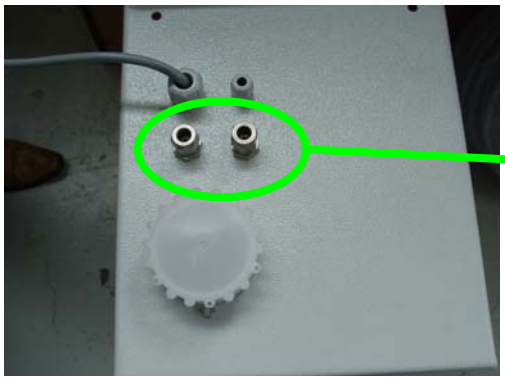

B.4 GASES SUPPLY

provided by
CUSTOMER

provided by
LPE

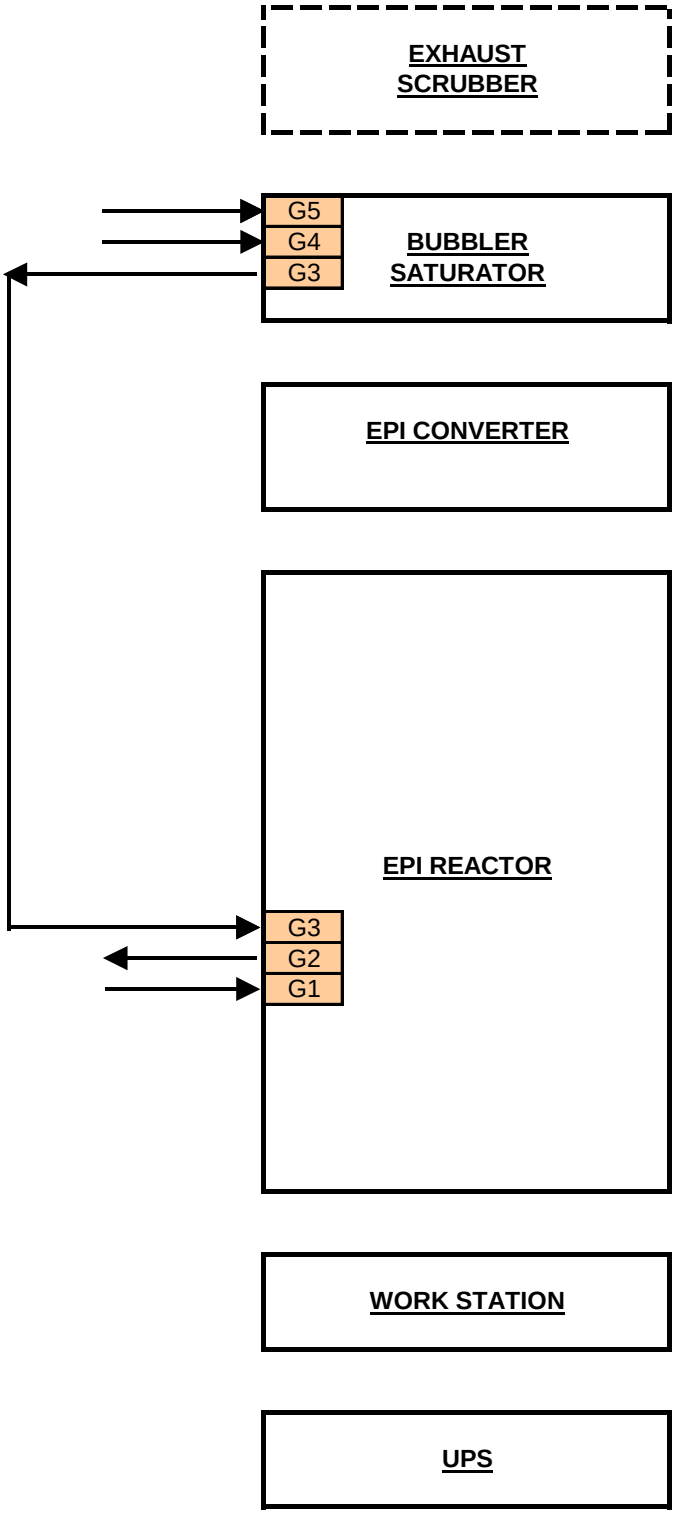

B.4.1 General specifications for all gases

Requested purity:

GASES	PURITY		REMARKS
H_2	> 6N	$\geq$ 99.9999%	$H_2O + O_2$ contents $\leq$ 100 ppb
N_2 process (liquid source)	> 6N	$\geq$ 99.9999%	O_2 contents $\leq$ 100 ppb
HCl	> 4N5	$\geq$ 99.995%	Cylinder type 47 - contents $\geq$ 25 Kg
Dopant N (20 ppm H_2) (*)			
Dopant P (20 ppm H_2) (*)			
Chlorosilanes TET/TCS	3N	$\geq$ 99.9%	intrinsic resistivity >3,000 Ωcm cylinder - 250Kg
Note: (*) purity > 5N			

B.4.2 Technical data

G1 Inlet process gas

Description:
detailed specifications (bell jar A + bell jar B - total flow)

# H_2 - rated flow	:	100 ÷ 350 SLPM	(process)
		100 ÷ 150 SLPM	(purge)
		max. flow	500 SLPM
# N_2 - rated flow	:	150 ÷ 300 SLPM	
# HCl - rated flow	:	0.5 ÷ 5 SLPM	(process)
		25 ÷ 50 SLPM	(susceptor etch)
# N dope PH_3/H_2	:	30 ÷ 50 ppm	
N dope AsH_3/H_2	:	30 ÷ 50 ppm	
		rated flow	5 ÷ 100 SCCM (*)
# P dope B_2H_6/H_2	:	30 ÷ 60 ppm	
		rated flow	5 ÷ 100 SCCM (*)
# Si sources	:	$SiCl_4$ - $SiHCl_3$	(liquid) through bubbler saturator
		rated flow	10 ÷ 40 gr/min (*)
		SiH_2Cl_2	(gaseous)
		rated flow	0.5 ÷ 5 SLPM (*)

(*) Other values for high/low resistivity and/or growth speed available

Pressure	:	min 400 Kpa - max 800 KPa (4-8 bar)
Pipes diameter *	:	1/4" (dope lines) - 3/8" (H_2 ; N_2 ; HCl ; Mix from Bubbler) type AISI 316 st.st., internally electropolished

Note * : suggested double wall tube for dope lines, HCl and Mix from Bubbler

Connection: ref. **dwg. RH 5250.U15**

Connection size : 1/4" and 3/8" VCR

G2 Vent

Description:

- the diameter of the vent pipe should be 12.7 mm (1/2 of inch)
- the vent pipe must be inserted whit an angle of 45° (for create the Venturi effect), in one of the exhaust pipe, to a distance of around 10 meters from the exit of the reactor.
  The vent pipe must no be connected directly whit the scrubber.

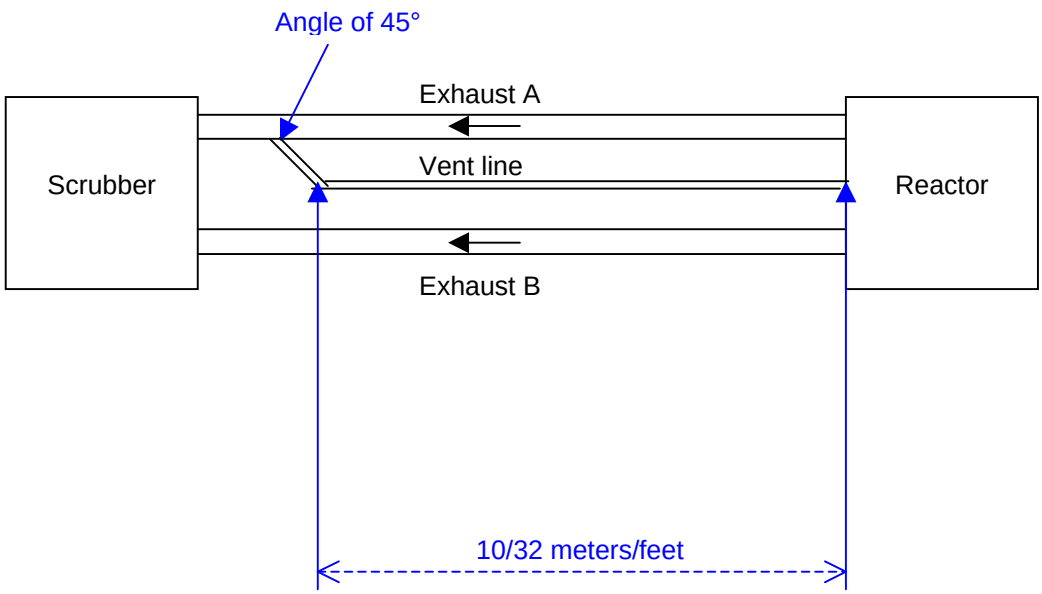

Connection: ref. **dwg. RH5250.U15**

on Reactor side : 1/4 VCR fem.

G3 Mix from Bubbler to Reactor

Description:

A double wall tube, purged by N_2 and monitored by gas (HCl) sensor, is advisable.

Pipes diameter : 3/8 " st.st.

Connection: ref. **dwg. RH 5250.U15 and RE4196**

on bubbler side : 1/4 VCR fem.
on Reactor side : 1/4 VCR male

GAS INLET FROM TOP

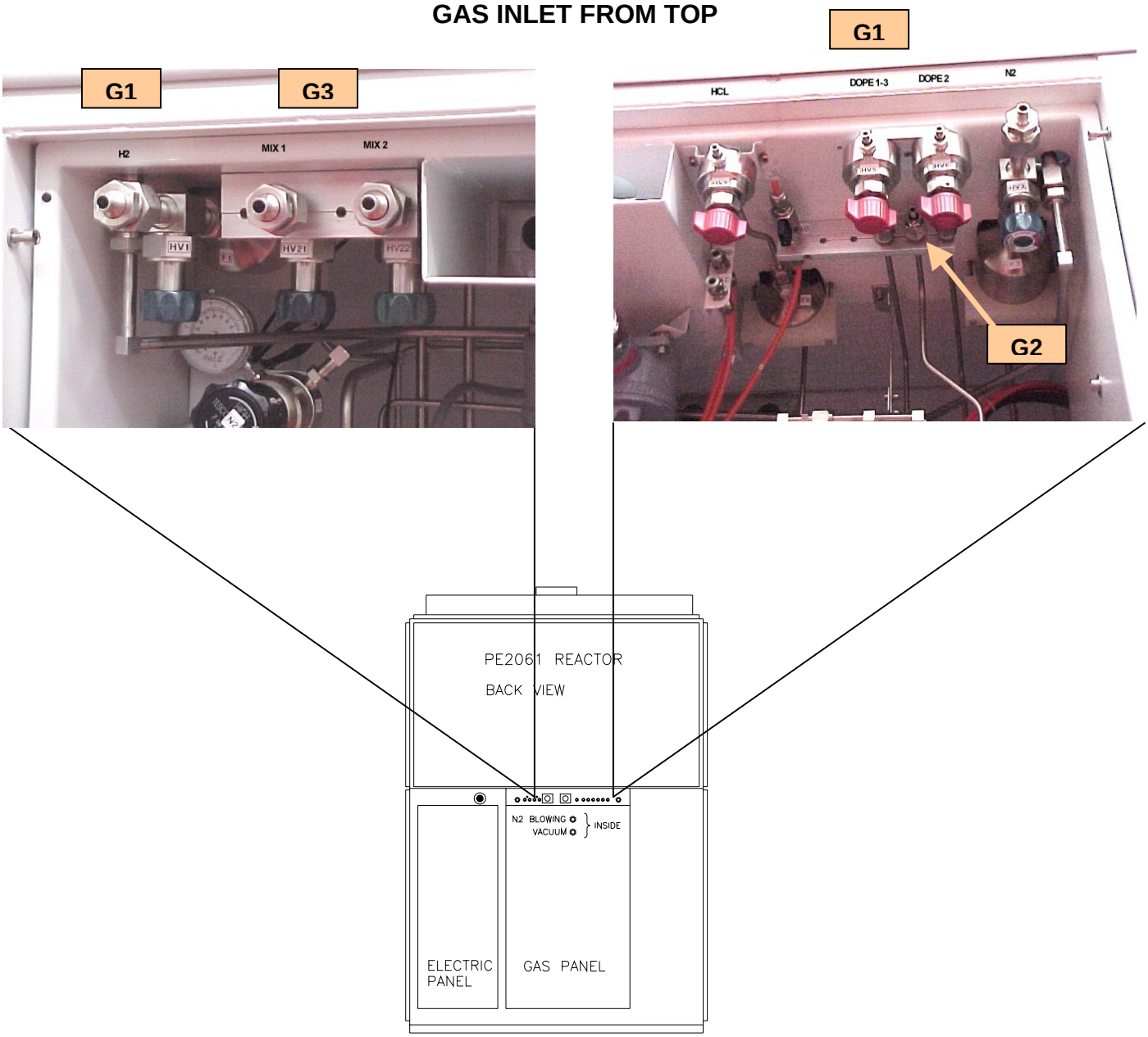

GAS INLET FROM FLOOR

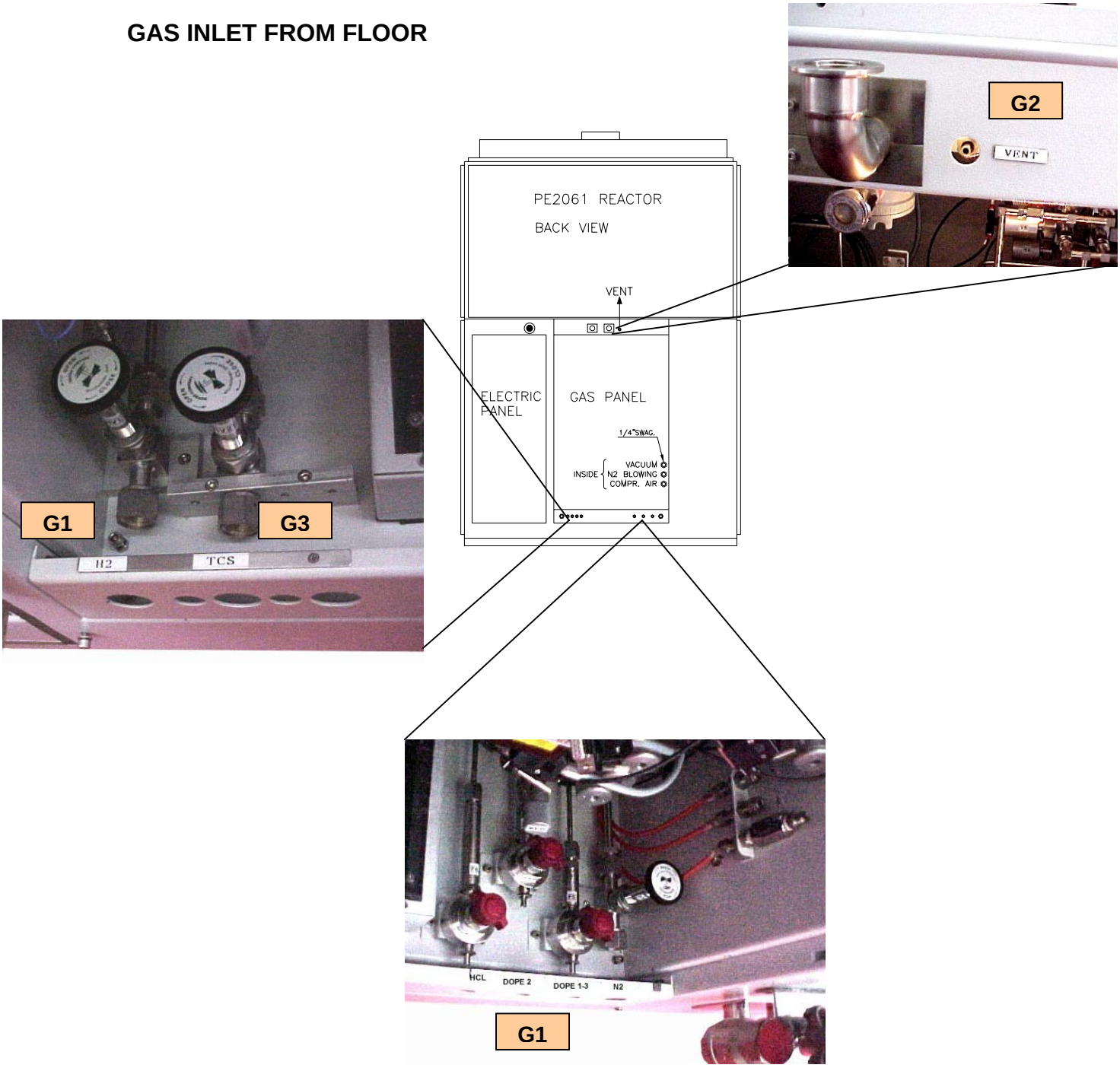

G4 Inlet Chlorosilane liquid to Bubbler

Description:

the Bubbler must be connected to a refilling line coming from the main liquid chlorosilane tank.
The material used for the line must be AISI 316 st.st. (internally electropolished), without non-metallic sections in all parts of the line to avoid the electrostatic charges in the liquid.

Pressure of liquid	:	≤ 300 KPa (≤ 3.0 bar)
Pipe diameter *	:	3/8" st. st.

Note *: a double wall tube, purged by N_2 and monitored by gas (HCl) sensor, is advisable.

Connection: ref. **dwg. RE4196**

on bubbler side : 1/4" VCR male

G5 Inlet Hydrogen to Bubbler

Description:

Hydrogen supply to the Bubbler should been in the range between 0.5 and 1.5 bar (suggested value 0.8 bar). See the following scheme.

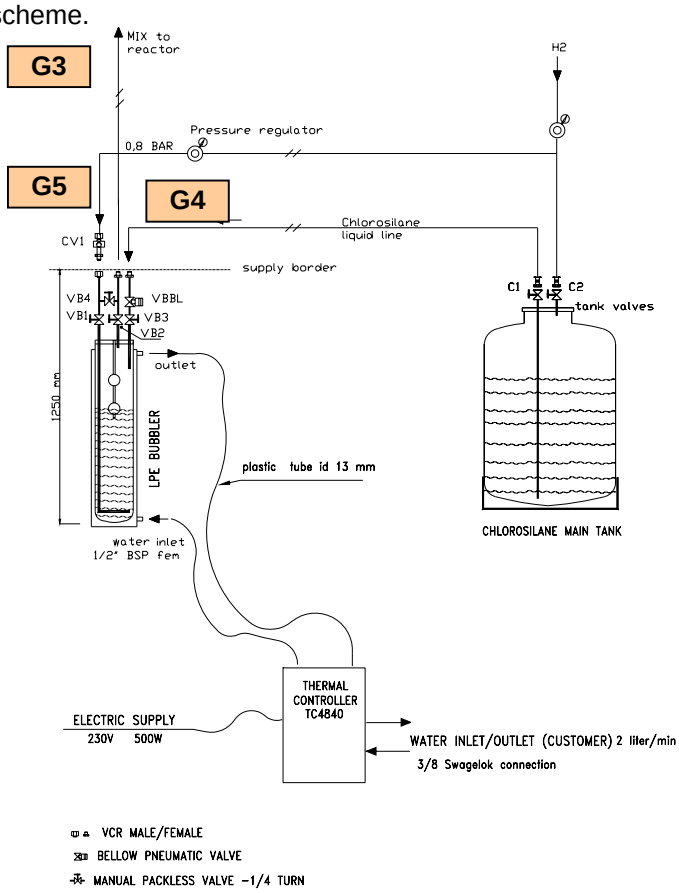

Pipe diameter : 1/4” st. st.

Connection: ref. **dwg. RE4196**

on bubbler side : 1/4” VCR fem.

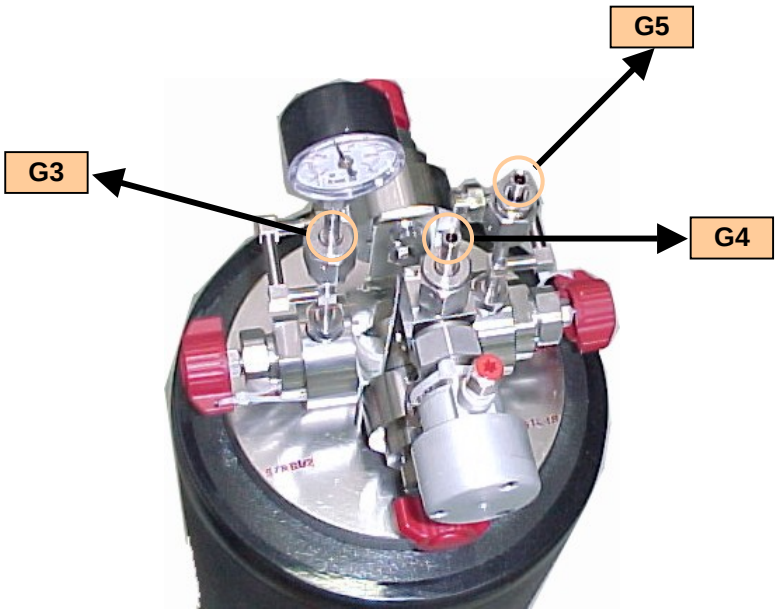

B.5 REACTED GAS EXHAUST

provided by
CUSTOMER

provided by
LPE

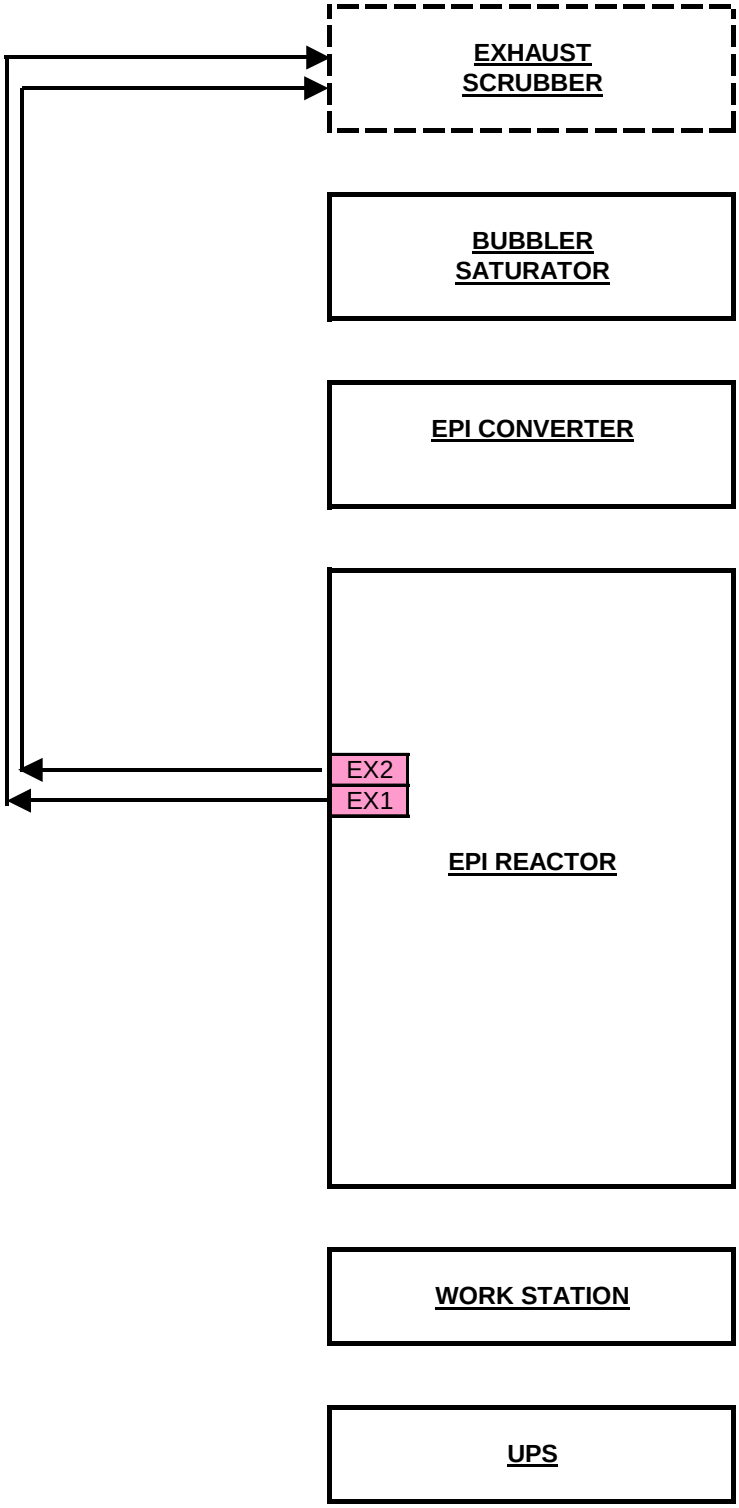

B.5.1 Technical data

EX1 - EX2 Out exhaust gas - station A and B

The exhaust gases have a high HCl and H_2 content and must be exhausted through a neutralization/dilution system (scrubber) before being injecting into the atmosphere (Customer's responsibility according to local regulations).

NOTE: Exhaust Scrubber system is very important in terms of safety, Reactor performance and maintenance frequency. Therefore a proper Exhaust Scrubber system should be installed.

Description:

The exhaust system (scrubber) must be designed in order to guarantee that:
during the deposition (when approx. H_2 = 350 SLPM + TCS = 40 gr/min), the pressure inside reaction bell-jar is **- 12 (±5) mbar** (*).
Fixed the pressure value, it must be stable (± 0.1 KPa = ± 1 mbar) during the process.
The pressure inside reaction bell-jar is computer monitored.

Note (*):**- 1.2 (± 0.5) KPa** (referred to atmospheric pressure)

⚠ ATTENTION
One single scrubber unit serving both chambers could be used only in the gases flowing from one reaction chamber are wet washed before mixing with other chamber gases.
Otherwise, one scrubber for each reaction chamber should be installed.

We also suggest that the maximum length of piping between the exhausts output of the reactor and the scrubber must not exceed 25 meters. Note that every elbow made along the path take about 1 meter of pipe length.

Connection: ref. **dwg. RH 5250.U14**

Pipeline material	:	stainless steel
Connections size	:	KF FLANGES DN32 inlet / DN40 outlet
Customer pipe's diameter	:	min. 2,5" typical 3"

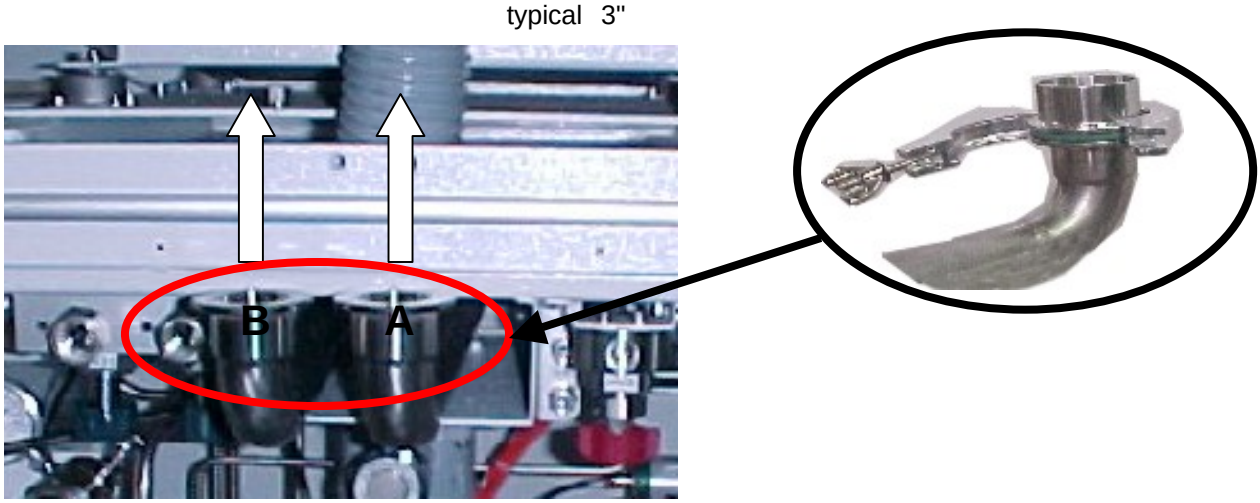

NOTE: typical delivery includes two flexible pipes (750 mm length) and a protection grid to be applied to avoid burns hazard.

B.5.2 Exhaust gas flow detail

	process step	Flow	unit	gas
Bell jar A	1 N_2 purge	150	SLPM	N_2
	2 H_2 purge	150	SLPM	H_2
	3 deposit	350	SLPM	H_2
		35	gr/min	$SiHCl_3$
		15	SLPM	H_2 / carrier dope
	4 H_2 purge	150	SLPM	H_2
	5 N_2 purge	150	SLPM	N_2
	6 susceptor etch	20	SLPM	H_2
		50	SLPM	HCl
Bell jar B	1 N_2 purge	150	SLPM	N_2
	2 H_2 purge	150	SLPM	H_2
	3 deposit	350	SLPM	H_2
		35	gr/min	$SiHCl_3$
		15	SLPM	H_2 / carrier dope
	4 H_2 purge	150	SLPM	H_2
	5 N_2 purge	150	SLPM	N_2
	6 susceptor etch	20	SLPM	H_2
		50	SLPM	HCl
Vent line	common	10-20	SLPM	N_2 carrier + H_2 / HCl / dope

NOTE: a) step 3 CAN NOT run simultaneously on both bell-jars
b) step 6 CAN NOT run simultaneously on both bell-jars
c) step 3 and 6 CAN NOT run simultaneously on the 2 bell-jars
d) except above cases, each step on one bell-jar CAN run simultaneously to any other step on the other bell-jars
e) vent line runs continuously

Pressure on each bellhar exhaust

Typical	-100 mm H_2O	-4 inches WG
Maximum	-200 mm H_2O	-8 inches WG
Minim	-15 mm H_2O	-0.5 inches WG

B.6 AIR EXHAUST

provided by
CUSTOMER

provided by
LPE

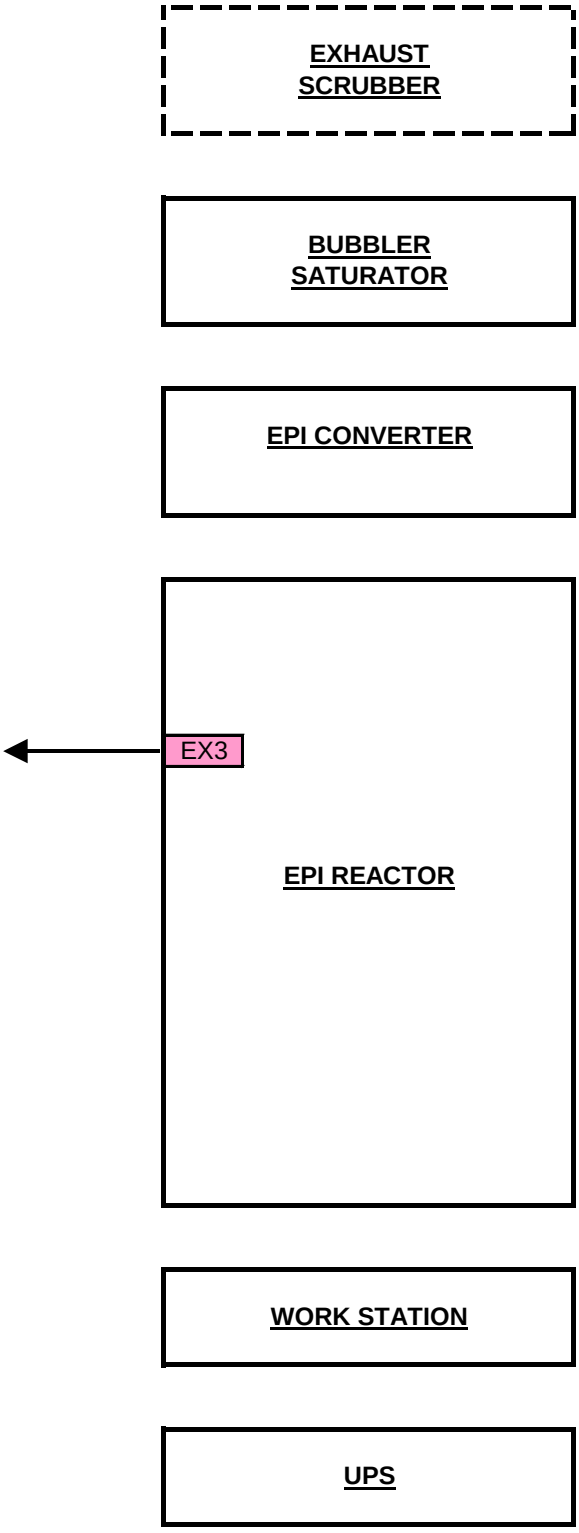

B.6.1 Technical data

EX3 Out exhaust air

Description:

An air blower for scavenging the reactor must be supplied by the Factory: blower, tube size and length must be correctly sized to obtain the specified values at reactor connection.

Flow	:	2,000 ÷ 2,500 mc/h (1,200 ÷ 1,500 CFM)
Pressure	:	adjustable between -200/ -800 Pa (-20 and -80 mm W.G).
Tube material	:	st.st. , PVC recommended, or any other suitable for acid fumes

The air exhaust may have a low HCl fumes content that can not evaluated, because it varies depending of bell-jar opening frequency; therefore the air should be exhausted through a neutralization system (gas washer) before being injecting into the atmosphere (Customer's responsibility according to local regulations).

Connection: ref. **dwg. RH 5250.U14**

Tube size (connection) : dia 250 mm (9.84")

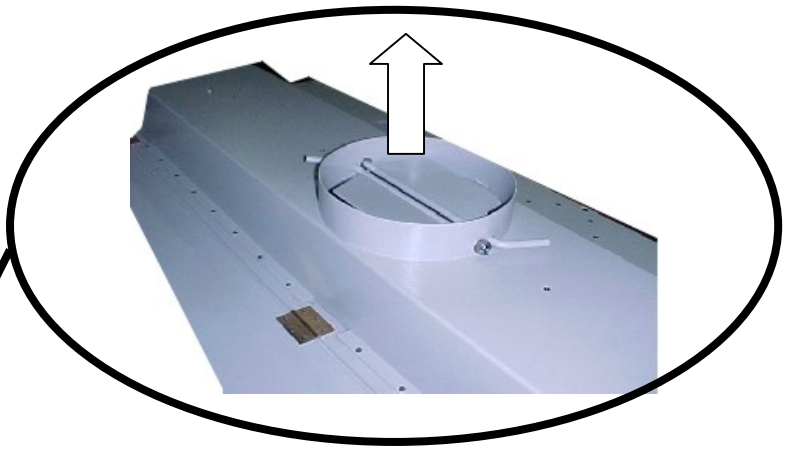

B.7 SERVICE UTILITY

provided by
CUSTOMER

provided by
LPE

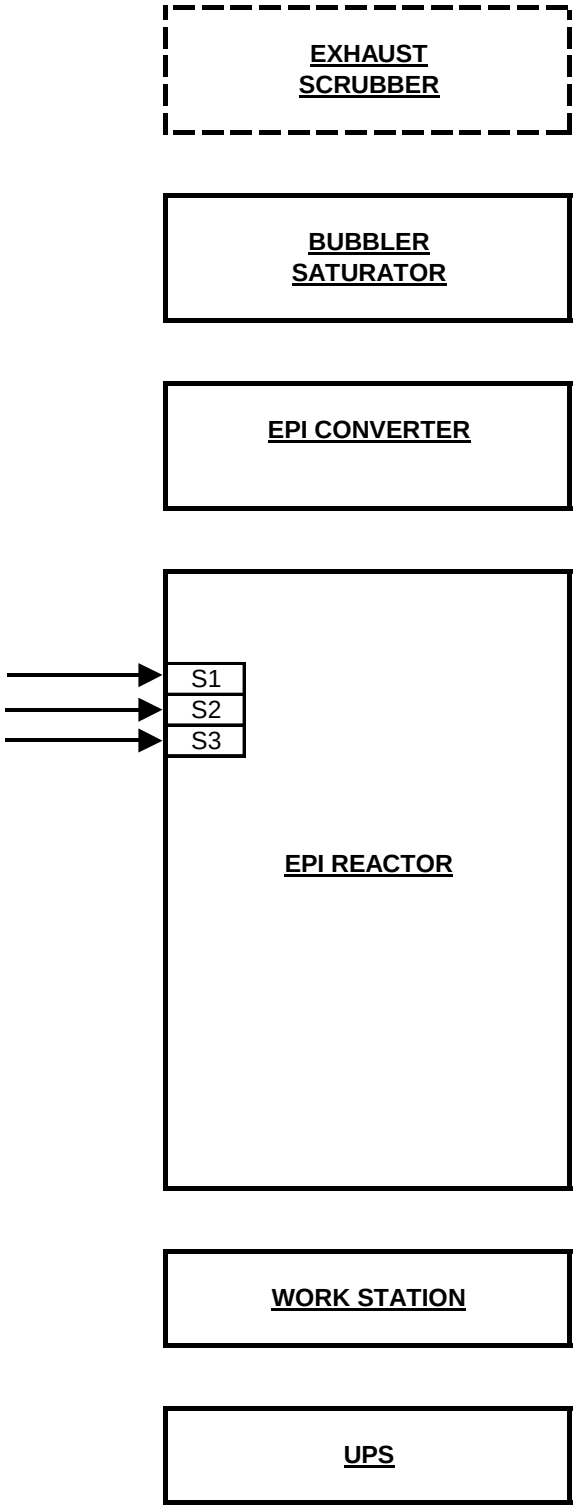

B.7.1 Technical data

S1 Clean dry air (CDA)

Filtered, oil-free, moisture-free	:	Factory Nitrogen recommended due to flammable gas in valves
Pressure	:	min. 550 KPa (5.5 bar), mandatory (*) max. 800 KPa (8 bar) reccom. 600 KPa (6 bar)
Flow	:	negligible (1 SLM)
Pipeline material	:	nylon, copper or any other suitable
Connection:		ref. **dwg. RH 5250.U15**
Connection size	:	1/4" Swagelok

Note: (*) **pressure below 550KPa (5.5 bar) may cause serious malfunction of gas valves** : low air pressure is computer monitored and may abort the production cycle.

⚠ATTENTION
The respect of these facilities specifications, is the minimal necessary condition for the good running of the machine.

S2 Vacuum

Vacuum line is needed for wafers handling

Suggested vacuum value	:	0.4 ÷ 0.5 bar absolute
Pipeline material	:	nylon or any other suitable
Connection:		ref. **dwg. RH 5250.U15**
Connection size	:	1/4" Swagelok

S3 Nitrogen blowing

This line could be used for supplying a Nitrogen gun in the reactor front side (example for blowing the wafers) . Gun or similar tool should be provided by the Customer.

Pipeline material	:	nylon or any other suitable
Connection:		ref. **dwg. RH 5250.U15**
Connection size	:	1/4" Swagelok

FOR REACTOR WITH GAS INLET FROM TOP

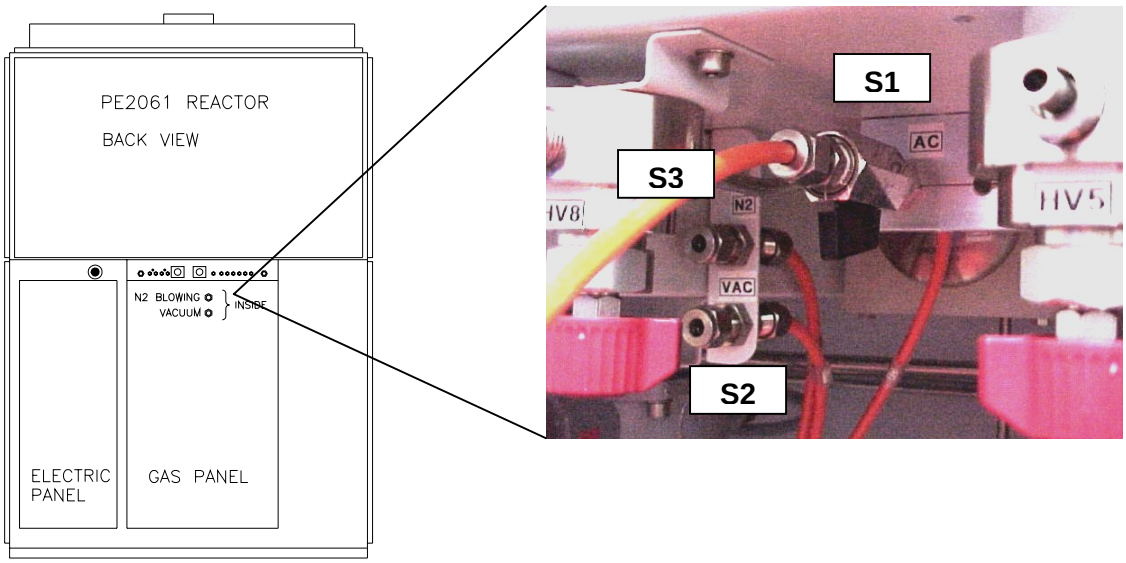

FOR REACTOR WITH GAS INLET FROM FLOOR

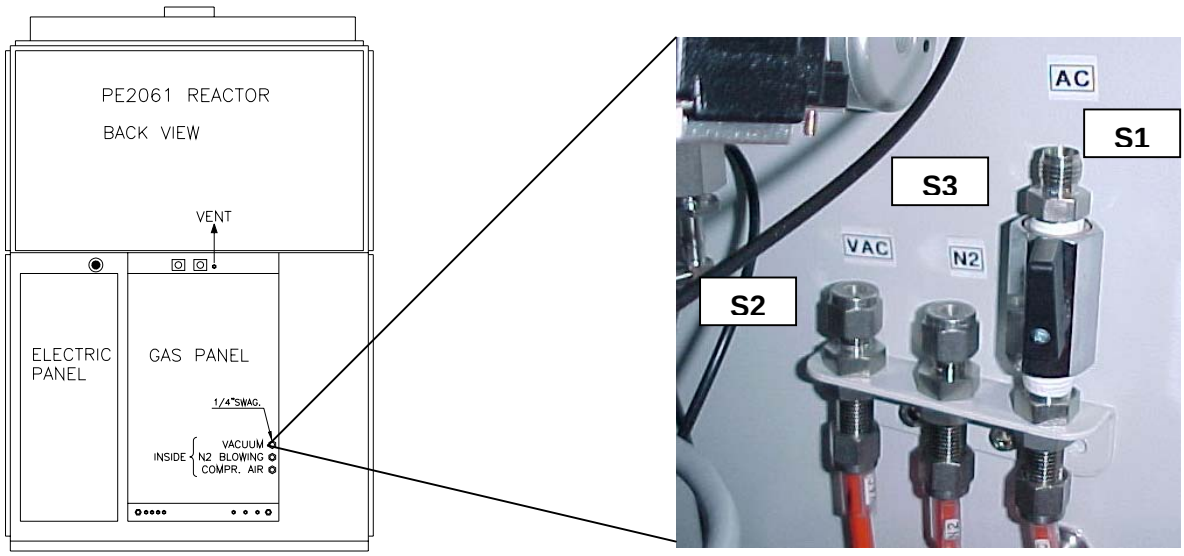

UTILITY MATRIX

GENERAL INFORMATION

Date:		Equipment name:	PE2061S
Equipment Manufacturer:	LPE S.p.A.	Model Number:	//

WEIGHT/DIMENSIONS

Item	Height	Depth	Width	Weight
Epireactor	2,735 mm	1,725 mm	1,800 mm	2,100 Kg
Epiconverter	1,790 mm	750 mm	1,860 mm	1,100 Kg

POWER (1)

Item	Volts	Tolerance	Freq.	Phase	Peak	Normal	KVA	Pow. conn.	Note
Epir. PE2061	400	± 5 %	50 Hz	3 ph + N	20 A	10 A	5,5	cable	\\
UPS	230	± 5 %	50 Hz	1 ph + N	15 A	10 A	2,2	plug	\\
Epir. PE2061	230	± 5 %	50 Hz	1 ph + N	8 A	3 A	0,7	cable	from UPS
Epic. IFC 150/2	400	± 5 %	50 Hz	3 ph	320 A	190 A	130	cable	\\

THERMAL OUTPUT

Item	In Water	In Exhaust	To Ambient	Other
Epireactor	80,000 Kcal/h avg.	5,000 Kcal/h avg.	5,000 Kcal/h avg.	\\
Epiconverter	8,000 Kcal/h avg.	\\	1,000 Kcal/h avg.	\\

EXHAUST REQUIREMENTS

Epireactor	Material/Size	Flow	Depress.
Scrubber station A	st.st. 1 1/4"	370 slm	- 1.2 KPa (- 12 mbar)
Scrubber station B	st.st. 1 1/4"	370 slm	- 1.2 KPa (- 12 mbar)
Air exhaust	st.st./PVC dia. 250 mm	2,500 c.m./h	- 0.5 KPa (- 5 mbar)

PROCESS COOLING WATER

Item	Flow	Inlet Temp.	Δ Temp. Outlet	Press. +/-	Press. Drop	Fitting Size	Fitting Type	filter
Epir. PE2061	200 lt./min	min 19/ max 24 °C	+ 7 °C	min 300/ max 600 Kpa (3÷6 bar)	250 KPa (2.5 bar)	1 1/2"	BSP fem. or NPT male	250 μ
Epic. IFC 150/2	40 lt./min	min 19/ max 24 °C	+ 7 °C	min 300/ max 600 KPa (3÷6 bar)	250 KPa (2.5 bar)	3/4"	BSP fem. or NPT male	none

BULK & SPECIALTY GASES

Substance	Flow	Purity	Press. +/-	Fitting Size	Fitting Type	Fitting Material	Filter
H2	500 SLPM	> 6N	> 400 KPa (> 60 psi)	1/2"	VCR female	AISI 316 L st.st.	none
N2	300 SLPM	> 6N	> 400 KPa (> 60 psi)	1/2"	VCR female	AISI 316 L st.st.	none
HCl	70 SLPM	> 4N5	> 400 KPa (> 60 psi)	1/4"	VCR female	AISI 316 L st.st.	none
Dope	≤ 1 SLPM	> 6N	> 400 KPa (> 60 psi)	1/4"	VCR female	AISI 316 L st.st.	none
TCS/TET mix	35/60 gr/min	> 3N	> 125 KPa (> 20 psi)	1/2"	VCR female	AISI 316 L st.st.	none

Note: (1) Other voltages and line frequency available on request

FACILITIES CHECK LIST

Customer's responsibility

EPITAXIAL REACTOR PE2061S s/n ……

EXAMPLE

After completion of facilities hook-up, the Customer should carry out the check of the facilities connected to the Reactor and return the list duly filled to LPE.
Upon receipt of the facilities check list, LPE will send the Engineer for start-up operations.

Item	Description	Connection	Ref. DWG	Ready date	Note
E1	Inlet line to UPS	plug	RH5250U16		
E2	UPS to Reactor line	plug - cable	RH5250U16		
E4	in Reactor power lines	cable	RH5250U16		
E5	in Generator power line	cable	RH5250U16		
E6	Reactor ground line	cable terminal - dia 10 mm	RH5250U16		
E7	Generator ground line	cable terminal - dia 10 mm	RH5250U16		
C3	SECS interface line	STD. Net cable			
C5	Reactor - Bubbler signal line	cable			
C6	inlet Scrubber line - **dry contact**	cable	RH5250U16		
W1	Reactor cooling water	1 ½" BSP female (NPT male)	RH5250U14		
W2	Drain for circuit emptying	3/8" female	RH5250U14		
W3	Reactor emergency water	1/2" BSP female (NPT male)	RH5250U14		
W4	Generator cooling water	3/4" BSP female (NPT male)	RH5250U14		
W5	Bubbler cooling water	1/2" BSP female	RE4196		
G1	in process gas	see connection scheme	RH5250U15		
G2	Vent line	1/4" VCR female	RE4196		
G3	mix from Bubbler to Reactor	see connection scheme	RH5250U15 and RE4196		
G4	Inlet Chlorosilane liquid to Bubbler	1/4" VCR male	RE4196		
G5	in H2 to Bubbler	1/4" VCR female	RE4196		
EX1	out exhaust gas station A	1 ¼"	RH5250U14		
EX2	out exhaust gas station B	1 ¼"	RH5250U14		
EX3	out exhaust air	dia 250 mm	RH5250U14		
S1	in compress air	1/4" swagelok	RH5250U15		
S1	in vacuum for wafer tweezers	1/4" swagelok	RH5250U15		
S3	Nitrogen blowing	1/4" swagelok	RH5250U15		

Date: _____ Customer signature: _____

E5EC
Digital Controller

OMRON

EN INSTRUCTION MANUAL

Thank you for purchasing the OMRON E5EC Digital Controller. This manual describes the functions, performance, and application methods needed for optimum use of the product. Please observe the following items when using the product.

- This product is designed for use by qualified personnel with a knowledge of electrical systems.
- Before using the product, thoroughly read and understand this manual to ensure correct use.
- Keep this manual in a safe location so that it is available for reference whenever required.

OMRON Corporation
©All Rights Reserved

Refer to the *E5□C Digital Controllers User's Manual* (Cat. No. H174) for detailed application procedures.

Safety Precautions

●Key to Warning Symbols

⚠ CAUTION — Indicates a potentially hazardous situation which, if not avoided, is likely to result in minor or moderate injury or property damage. Read this manual carefully before using the product.

1654642-3F

●Warning Symbols

⚠ CAUTION

- Minor injury due to electric shock may occasionally occur. Do not touch the terminals while power is being supplied.
- Electric shock, fire, or malfunction may occasionally occur. Do not allow metal objects, conductors, cuttings from installation work, or moisture to enter the Digital Controller, the Setup Tool ports, or between the pins on the connectors on the Setup Tool cable.
- Do not use the product where subject to flammable or explosive gas. Otherwise, minor injury from explosion may occasionally occur.
- Never disassemble, modify, or repair the product or touch any of the internal parts. Minor electric shock, fire, or malfunction may occasionally occur.
- CAUTION - Risk of Fire and Electric Shock
  a) This is the product UL listed as Open Type Process Control Equipment. It must be mounted in an enclosure that does not allow fire to escape externally.
  b) More than one disconnect switch may be required to de-energize the equipment before servicing.
  c) Signal inputs are SELV, limited energy.
  d) Caution: To reduce the risk of fire or electric shock, do not interconnect the outputs of different Class 2 circuits.
- If the output relays are used past their life expectancy, contact fusing or burning may occasionally occur. Always consider the application conditions and use the output relays within their rated load and electrical life expectancy. The life expectancy of output relays varies considerably with the output load and switching conditions.
- Loose screws may occasionally result in fire. Tighten the terminal screws to the specified torque of 0.43 to 0.58 N•m.
- Set the parameters of the product so that they are suitable for the system being controlled. If they are not suitable, unexpected operation may occasionally result in property damage or accidents.
- A malfunction in the Digital Controller may occasionally make control operations impossible or prevent alarm outputs, resulting in property damage. To maintain safety in the event of malfunction of the Digital Controller, take appropriate safety measures, such as installing a monitoring device on a separate line.

Suitability for Use

Omron Companies shall not be responsible for conformity with any standards, codes or regulations which apply to the combination of the Product in the Buyer's application or use of the Product.

At Buyer's request, Omron will provide applicable third party certification documents identifying ratings and limitations of use which apply to the Product. This information by itself is not sufficient for a complete determination of the suitability of the Product in combination with the end product, machine, system, or other application or use. Buyer shall be solely responsible for determining appropriateness of the particular product with respect to Buyer's application, product or system. Buyer shall take application responsibility in all cases.

NEVER USE THE PRODUCT FOR AN APPLICATION INVOLVING SERIOUS RISK TO LIFE OR PROPERTY WITHOUT ENSURING THAT THE SYSTEM AS A WHOLE HAS BEEN DESIGNED TO ADDRESS THE RISKS, AND THAT THE OMRON PRODUCT(S) IS PROPERLY RATED AND INSTALLED FOR THE INTENDED USE WITHIN THE OVERALL EQUIPMENT OR SYSTEM.

Precautions for Safe Use

Be sure to observe the following precautions to prevent operation failure, malfunction, or adverse affects on the performance and functions of the product. Not doing so may occasionally result in unexpected events. Use the product within specifications.

(1) The product is designed for indoor use only. Do not use the product outdoors. Do not use or store the product in any of the following locations.
- Places directly subject to heat radiated from heating equipment.
- Places subject to splashing liquid or oil atmosphere.
- Places subject to direct sunlight.
- Places subject to dust or corrosive gas (in particular, sulfide gas and ammonia gas).
- Places subject to intense temperature change.
- Places subject to icing and condensation.
- Places subject to vibration and large shocks.

(2) Use/store within the rated temperature and humidity ranges. Provide forced-cooling if required.
(3) To allow heat to escape, do not block the area around the product. Do not block the ventilation holes on the product.
(4) Be sure to wire properly with correct polarity of terminals.
(5) Use the specified size of crimped terminals (M3, width 5.8 mm or less) for wiring. To connect bare wires to the terminal block, use copper braided or solid wires with a gage of AWG24 to AWG18 (equal to a cross-sectional area of 0.205 to 0.8231 mm²). (The stripping length is 6 to 8 mm.). Up to two wires of same size and type, or two crimped terminals can be inserted into a single terminal.
(6) Do not wire the terminals which are not used.
(7) Allow as much space as possible between the controller and devices that generate a powerful high-frequency or surge. Separate the high-voltage or large-current power lines from other lines, and avoid parallel or common wiring with the power lines when you are wiring to the terminals.
(8) Use this product within the rated load and power supply.
(9) Make sure that the rated voltage is attained within two seconds of turning ON the power using a switch or relay contact. If the voltage is applied gradually, the power may not be reset or output malfunctions may occur.
(10) Make sure that the Digital Controller has 30 minutes or more to warm up after turning ON the power before starting actual control operations to ensure the correct temperature display.
(11) When executing self-tuning, turn the load and the unit ON simultaneously, or turn the load ON before you turn the controller ON.
(12) A switch or circuit breaker should be provided close to this unit. The switch or circuit breaker should be within easy reach of the operator, and must be marked as a disconnecting means for this unit.
(13) Wipe off any dirt from the Digital Controller with a soft dry cloth. Never use thinners, benzine, alcohol, or any cleaners that contain these or other organic solvents. Deformation or discoloration may occur.
(14) Design system (control panel, etc) considering the 2 second of delay that the controller's output to be set after power ON.
(15) The output will turn OFF when you move to the Initial Setting Level. Take this into consideration when performing control.
(16) The number of non-volatile memory write operations is limited. Therefore, use RAM write mode when frequently overwriting data during communications or other operations.
(17) When disassembling the Digital Controller for disposal, use suitable tools.
(18) Do not connect cables to both the front-panel Setup Tool port and the top-panel Setup Tool port at the same time. The Digital Controller may be damaged or may malfunction.
(19) Do not exceed the communications distance that is given in the specifications and use the specified communications cable. Refer to the *E5□C Digital Controllers User's Manual* (Cat. No. H174) for the communications distance and cable specifications.
(20) Do not turn the power supply to the Digital Controller ON or OFF while the USB-Serial Conversion Cable is connected. The Digital Controller may malfunction.
(21) The maximum terminal temperature is 75°C.

●Specifications

Power supply voltage	100 to 240 VAC, 50/60 Hz or 24 VAC, 50/60 Hz / 24VDC
Operating voltage range	85 to 110% of the rated voltage
Power consumption Option 000:	6.6 VA max. (100 to 240 VAC) 4.1 VA max. (24 VAC)/2.3 W max. (24 VDC)
All other specifications:	8.3 VA max. (100 to 240 VAC) 5.5 VA max. (24 VAC)/3.2 W max. (24 VDC)
Indication accuracy (Ambient temperature: 23°C)	Thermocouple: (±0.3 % of indication value or ±1°C, whichever is greater) ±1 digit max. Platinum resistance thermometer: (±0.2 % of indication value or ±0.8°C, whichever is greater) ±1 digit max. Analog input: ±0.2 % FS ±1 digit max.
Event input Contact input	Output current: approx. 7 mA per contact. ON:1 kΩ max., OFF: 100 kΩ min.
No-contact input	ON: residual voltage 1.5 V max., OFF: leakage current 0.1 mA max.
Remote SP input	4 to 20 mA DC or 0 to 20 mA DC
Potentiometer input	0 to 5 V DC or 1 to 5 V DC or 0 to 10 V DC Between 100 Ω and 10 kΩ for maximum open position.
Control output 1	Relay output: SPST-NO, 250 VAC, 5 A (resistive load) Electrical life of relay: 100,000 operations Voltage output (for driving SSR): 12 VDC ±20%, 40 mA for one control output, 21 mA if there are two control outputs Current output: 4 to 20 mA DC, 0 to 20 mA DC Load: 500Ω max.
Control output 2	Relay output: SPST-NO, 250 VAC, 5 A (resistive load) Electrical life of relay: 100,000 operations Voltage output (for driving SSR): 12 VDC, 21 mA Current output: 4 to 20 mA DC or 0 to 20 mA DC with load of 500 Ω max.
Control method	ON/OFF or 2-PID control
Auxiliary outputs	Relay outputs: 250 VAC, two outputs: 3 A (resistive load), four outputs: 2 A (resistive load) Electrical life of relay: 100,000 operations
Transfer output	4 to 20 mA DC with load of 500 Ω max. 1 to 5 VDC with load of 1 kΩ min.
Ambient temperature	–10 to 55°C (Avoid freezing or condensation)
Ambient humidity	25% to 85%
Storage temperature	–25 to 65°C (Avoid freezing or condensation)
Altitude	Max. 2,000 m
Recommended fuse	T2A, 250 VAC, time-lag, low-breaking capacity
Weight	Approx. 210 g (Digital Controller only)
Degree of protection	Front panel: IP66 Rear case: IP20, Terminal section: IP00
Installation environment	Installation category II, pollution degree 2 (as per IEC61010-1)
Memory protection	Non-volatile memory (Number of write operations: 1,000,000)
Temporary overvoltage	Short term: 1200 V+ (power supply voltage) Long term: 250 V+ (power supply voltage)

■Wiring

Dimensions

Dimensions (mm)

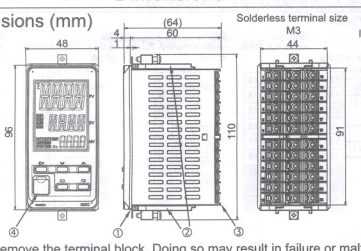

In the pack:
- Main unit
- Instruction manual
- Watertight packing (Y92S-P9): ①
- Two adapters (Y92F-51): ②
- Terminal cover (Provided only for models with E5EC-□□□□5□): ③
- Front-panel Setup Tool port cover (Y92S-P7): ④

Sold Separately
- Terminal cover: (Model: E53-COV24)
- USB-Serial Conversion Cable (E58-CIFQ2)
- Conversion Cable (E58-CIFQ2-E)

* Do not remove the terminal block. Doing so may result in failure or malfunction.
* Setup Tool ports are provided on the top and front of the Digital Controller. Use these ports to connect a personal computer to the Digital Controller when using the Setup Tool. The E58-CIFQ2 USB-Serial Conversion Cable is required to connect to the top-panel port. The E58-CIFQ2-E USB-Serial Conversion Cable is required to connect to the front-panel port. (Do not use the product with the USB-Serial Conversion Cable left permanently connected.) Refer to the instruction manual provided with the USB-Serial Conversion Cable for details on connection methods.
* If the front-panel port cover is lost or damaged, order it separately. The Waterproof Packing should be periodically replaced because it may deteriorate, shrink, or harden depending on the operating environment.

●Installation

Individual mounting (mm)

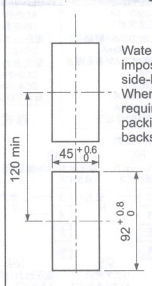

Waterproofing is impossible with side-by-side installation. When waterproofing is required, fit watertight packing on the backside of front panel.

Side-by-side mounting (mm)

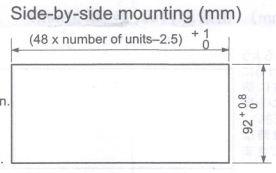

- Insert the main unit through the mounting hole in the panel (1-8 mm thickness). Insert the mounting brackets (supplied) into the fixing slots located on the top and bottom of the rear case.
- Tighten the two mounting screws on the top and bottom of the adapter to keep them balanced, and finally tighten them to a torque of between 0.29 and 0.39 N·m.
- When more than one machine is installed, make sure that the ambient temperature does not exceed the specified limit.

●Names of Parts on Front Panel

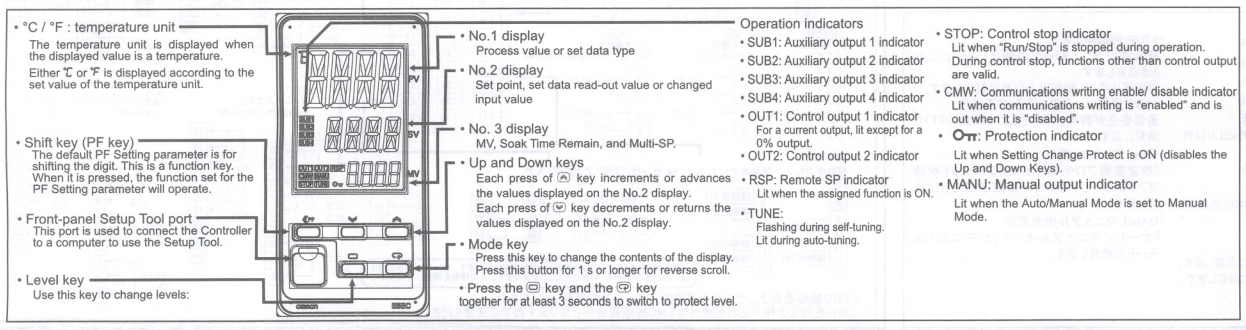

●Connections (The applicability of the electric terminals varies with the type of machine.)

Do not connect anything to the terminals that are shaded gray.

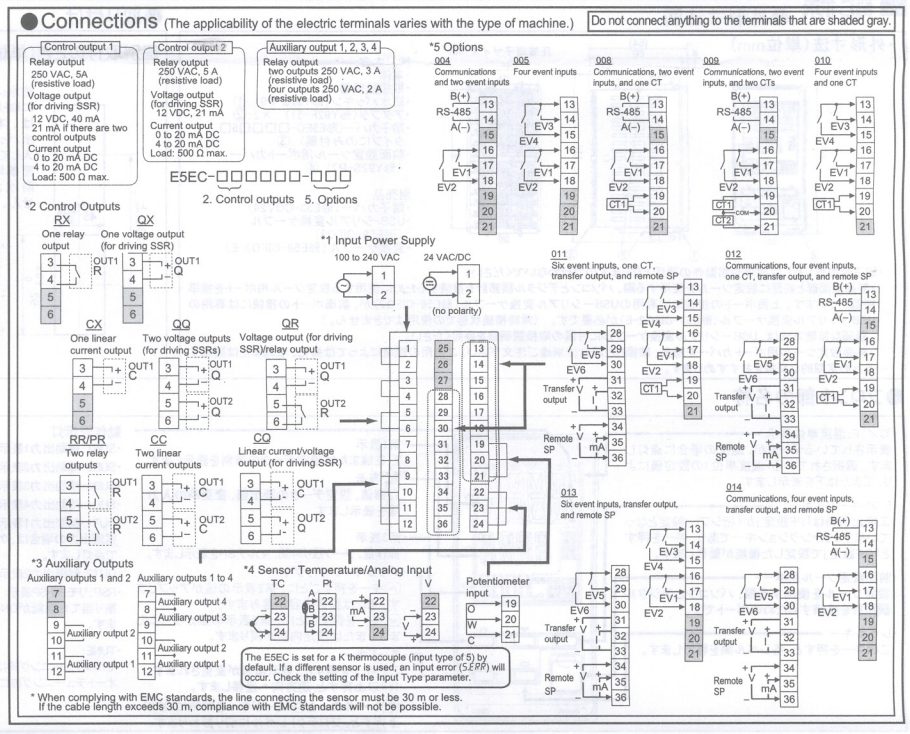

* When complying with EMC standards, the line connecting the sensor must be 30 m or less. If the cable length exceeds 30 m, compliance with EMC standards will not be possible.

■Operation Menu

●Input Type

	Input type	Input	Setting	Setting range °C	Setting range °F
Temperature inputs	Platinum resistance thermometer	Pt100	0	-200 to 850	-300 to 1500
			1	-199.9 to 500.0	-199.9 to 900.0
			2	0.0 to 100.0	0.0 to 210.0
		JPt100	3	-199.9 to 500.0	-199.9 to 900.0
			4	0.0 to 100.0	0.0 to 210.0
	Thermocouple	K	5	-200 to 1300	-300 to 2300
			6	-20.0 to 500.0	0.0 to 900.0
		J	7	-100 to 850	-100 to 1500
			8	-20.0 to 400.0	0.0 to 750.0
		T	9	-200 to 400	-300 to 700
			10	-199.9 to 400.0	-199.9 to 700.0
		E	11	-200 to 600	-300 to 1100
		L	12	-100 to 850	-100 to 1500
		U	13	-200 to 400	-300 to 700
			14	-199.9 to 400.0	-199.9 to 700.0
		N	15	-200 to 1300	-300 to 2300
		R	16	0 to 1700	0 to 3000
		S	17	0 to 1700	0 to 3000
		B	18	100 to 1800	300 to 3200
		W	19	0 to 2300	0 to 3200
		PL II	20	0 to 1300	0 to 2300
	Infrared Thermosensor ES1B	10 to 70°C	21	0 to 90	0 to 190
		60 to 120°C	22	0 to 120	0 to 240
		115 to 165°C	23	0 to 165	0 to 320
		140 to 260°C	24	0 to 260	0 to 500
Analog input type	Current input	4 to 20mA	25	Use the following ranges for scaling: -1999 to 9999, -199.9 to 999.9, -19.99 to 99.99, -1.999 to 9.999	
		0 to 20mA	26		
	Voltage input	1 to 5V	27		
		0 to 5V	28		
		0 to 10V	29		

*The default is"5".
*S.ERR will be displayed when a platinum resistance thermometer is mistakenly connected while input type is not set for it. To clear the S.ERR display, correct the wiring and cycle the power supply.

●Alarms

Setting	Alarm type	Alarm output function: Positive alarm value (X)	Alarm output function: Negative alarm value (X)
0	No alarm function	Output off	
*1 1	Deviation upper/lower limit	ON OFF L H SP	Vary with "L", "H" values
2	Deviation upper limit	ON OFF X SP	ON OFF X SP
3	Deviation lower limit	ON OFF X SP	ON OFF X SP
*1 4	Deviation upper/lower range	ON OFF L H SP	Vary with "L", "H" values
*1 5	Deviation upper/lower limit standby sequence ON	ON OFF L H SP	Vary with "L", "H" values
6	Deviation upper limit standby sequence ON	ON OFF X SP	ON OFF X SP
7	Deviation lower limit standby sequence ON	ON OFF X SP	ON OFF X SP
8	Absolute value upper limit	ON OFF 0	ON OFF 0
9	Absolute value lower limit	ON OFF 0	ON OFF 0
10	Absolute value upper limit standby sequence ON	ON OFF 0	ON OFF 0
11	Absolute value lower limit standby sequence ON	ON OFF 0	ON OFF 0
12	LBA (only for alarm 1)		
13	PV Change Rate Alarm		
14	SP absolute value upper limit	ON OFF 0	ON OFF 0
15	SP absolute value lower limit	ON OFF 0	ON OFF 0
16	MV absolute value upper limit	ON OFF 0	ON OFF 0
17	MV absolute value lower limit	ON OFF 0	ON OFF 0
18	RSP absolute value upper limit	ON OFF 0	ON OFF 0
19	RSP absolute value lower limit	ON OFF 0	ON OFF 0

*1: Upper and lower limits can be set for parameters 1, 4 and 5 to provide for different types of alarm. These are indicated by the letter "L" and "H".
• The default alarm type is "2"

⚠ Conformance to EN/IEC Standards

This is a class A product.
In residential areas it may cause radio interference, in which case the user may be required to take adequate measures to reduce interference.

A 급 기기 (업무용 방송통신기자재)
이 기기는 업무용(A 급) 전자파적합기기로서 판매자또는 사용자는 이 점을 주의하시기 바라며, 가정외의지역에서 사용하는 것을 목적으로 합니다.

THERMAL REGULATOR
WATER VALVE 3 WAY

●Initial Setting Level

Operation stopped. (Control/alarm are both stopped.)

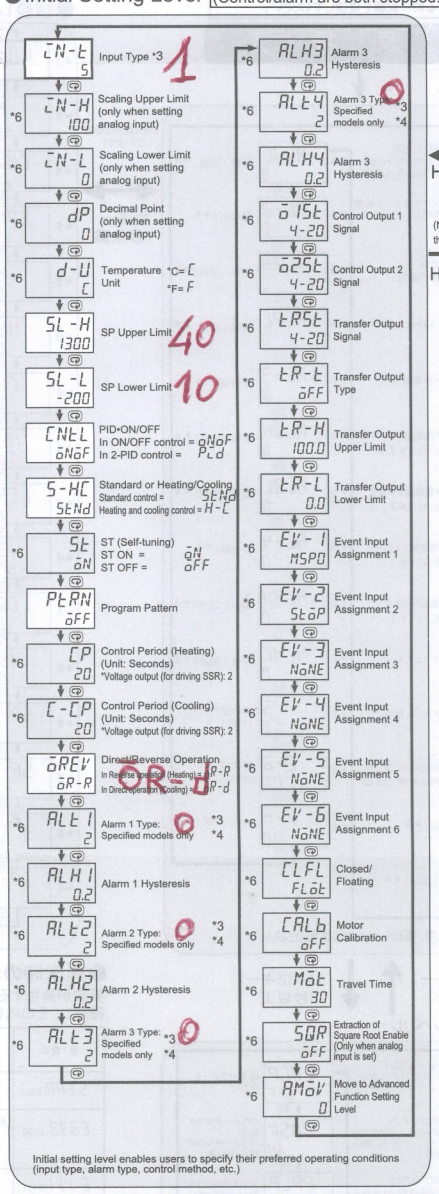

Initial setting level enables users to specify their preferred operating conditions (input type, alarm type, control method, etc.)

⚠ Conformance to Safety Standard

- Reinforced insulation is provided between input power supply, relay outputs, and between other terminals.
- Do not allow temporary overvoltages on the primary circuit to exceed the following values. Check the power supply voltage to the Digital Controller. Short-term overvoltage: 1,200 V + (Power supply voltage) Long-term overvoltage: 250 V + (Power supply voltage)
- Always externally connect the recommended fuse that is specified in the Instruction Manual before you use the Digital Controller.
- Analog Input
  • If you input an analog voltage or current, set the Input Type parameter to the correct input type.
  • Do not use the Digital Controller to measure a circuit with Measurement Category II, III, or IV.
  • Do not use the Digital Controller to measure an energized circuit to which a voltage that exceeds 30 Vms or 60 VDC is applied.
- The protection provided by the Digital Controller may be impaired if the Digital Controller is used in a manner that is not specified by the manufacturer.

-TM0045-

Check the wiring before turning ON the power supply.

POWER ON

●Operation Level

Hold down for at least 3 seconds (No.1 display flashes, then the control stops.)

Hold down for at least 1 second

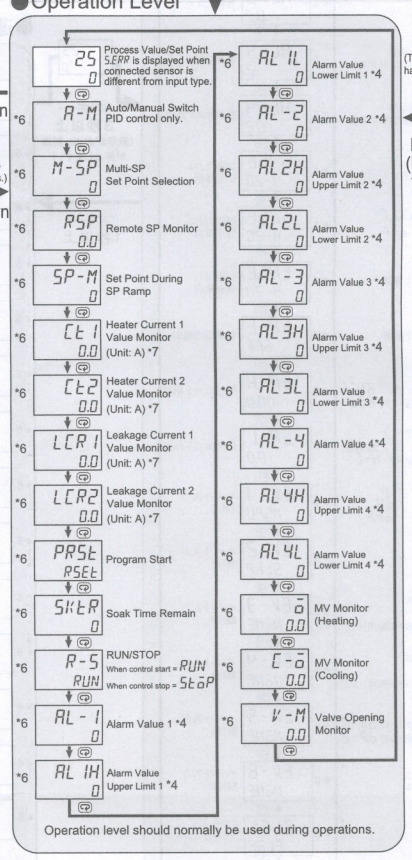

Operation level should normally be used during operations.

(The No.3 display has been omitted.)

Press (less than 1 second)

Hold and keys down for at least 1 second

Hold and keys down for at least 3 seconds

●Protect Level

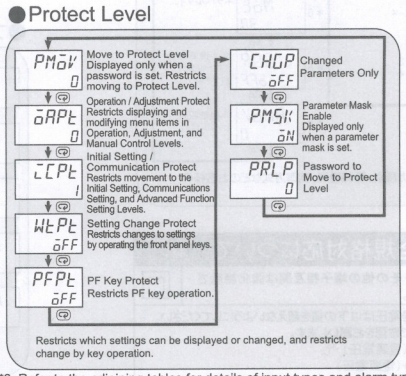

Restricts which settings can be displayed or changed, and restricts change by key operation.

*3: Refer to the adjoining tables for details of input types and alarm types.
*4: Applicable only to models with alarm functions.
*5: Operation is stopped when moved to the initial setting level. (control/alarm are both stopped.)
*6: The grayed-out setting items may not be displayed according to the models and setting.
*7: Applicable only to models with heater burnout functions. The four numeric digits of the product code are displayed in the No. 2
*8: display. The setting cannot be changed and there is nothing that you need to set.

■Other functions

Refer to the *E5□C Digital Controllers User's Manual* (Cat. No. H174) for information on the Advanced Function Setting Level, Monitor/Setting Item Level, Manual Control Level, and other functions. Refer to the *E5□C Digital Controllers Communications Manual* (Cat. No. H175) for information on communications.

●Adjustment Level

Only the value set to the "AJ5: Temperature Input Shift" parameter is applied to the entire temperature input range. When the process value is 200 °C, the process value is treated as 201.2 °C after input shift if the input shift value is set to 1.2 °C. The process value is treated as 198.8 °C after input shift if the input shift value is set to –1.2 °C.

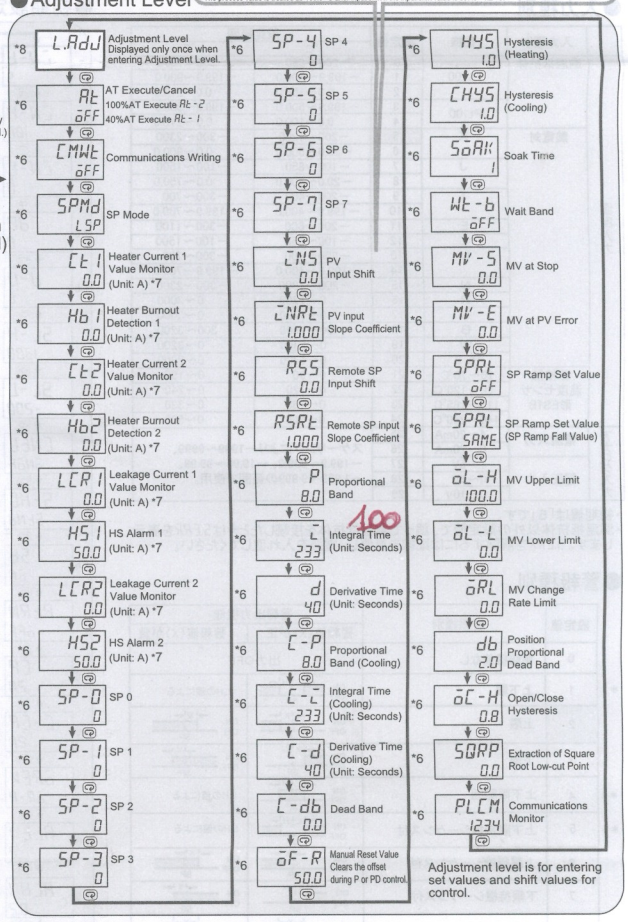

Adjustment level is for entering set values and shift values for control.

●Error Display (troubleshooting)

When an error has occurred, the No.1 display shows the error code. Take necessary measure according to the error code, referring the table below.

No.1 display	Meaning	Action	Status at error: Control output	Status at error: Alarm
S.ERR (S. Err)	Input error *2	Check the setting of the Input Type parameter, check the input wiring, and check for broken or shorts in the temperature sensor.	OFF	Operates as above the upper limit.
E333 (E333)	A/D converter error *2	After the correction of A/D converter error, turn the power OFF then back ON again. If the display remains the same, the controller must be repaired. If the display is restored to normal, then a probable cause can be external noise affecting the control system. Check for external noise.	OFF	OFF
E111 (E111)	Memory error	Turn the power OFF then back ON again. If the display remains the same, the controller must be repaired. If the display is restored to normal, then a probable cause can be external noise affecting the control system. Check for external noise.	OFF	OFF

If the input value exceeds the display limit (-1999 to 9999), though it is within the control range, cccc will be displayed under -1999 and ssss above 9999. Under these conditions, control output and alarm output will operate normally. Refer to the *E5□C Digital Controllers User's Manual* (Cat. No. H174) for the controllable ranges.

*2: Error shown only for "Process value / Set point". Not shown for other status.

OMRON EUROPE B.V.
Wegalaan 67-69, NL-2132 JD Hoofddorp The Netherlands
Phone 31-2356-81-300
FAX 31-2356-81-388
OMRON ELECTRONICS LLC
One Commerce Drive Schaumburg, IL 60173-5302 U.S.A
Phone 1-847-843-7900
FAX 1-847-843-7787
OMRON ASIA PACIFIC PTE. LTD.
No. 438A Alexandra Road # 05-05/08 (Lobby 2),
Alexandra Technopark, Singapore 119967
Phone 65-6835-3011
FAX 65-6835-2711
OMRON Corporation
Shiokoji Horikawa, Shimogyo-ku, Kyoto 600-8530 JAPAN